MECHANICAL POWER TRANSMISSION

HT500 synchronous drive system

Contents

HT500 synchronous belt drives

Features and Benefits **2**
- HT500 drives 2
- HT500 sprocket and belt part nomenclature 5

Specification **6**
- HT500 Taper-Lock sprockets 6
- HT500 MPB sprockets 12
- HT500 ACHE sprockets 14
- HT500 idler sprockets 16
- HT500 belts 17

Selection **19**
- HT500 low-speed design low calculations 19
- HT500 drive selection procedure 20
- Standard belt tensioning procedure 34

Bushings **76**
- Taper-Lock Bushings 76
- Nomenclature 76
- Specifications 78
  - Dimensions 78
  - Stock bore 80
  - Reborable 86
  - Metric bores 87
- QD bushings 88
  - Features and benefits – metric bore and hardware 88
  - Specifications – metric bore and hardware 89
- Idler brackets and bushings 98

Engineering and technical **99**
- Overhung load calculations 99
- HT500 drive installation 100
  - Sprocket installation and alignment 100
  - Belt installation and tensioning 101
  - Drive Alignment 102
  - Drive Tensioning 103
- Software: Dodge® Passport 104

Part number index **105**

Features and benefits

HT500 drives – the TCO drive solution: Energy efficient – maintenance free

HT500 high torque synchronous drive system is the latest generation in the Dodge® synchronous product line. The HT500 belt is manufactured with polyurethane, carbon fiber cords and a black nylon tooth facing, featuring the modified curvilinear tooth profile. This drive system utilizes Dodge's Taper-Lock® bushing system to deliver our most power dense synchronous drive in a compact package. Also available from stock: Fin fan sprockets with QD* bushings, and minimum-plain-bore (MPB) sprockets.

Value added features

- Virtually maintenance free
- Requires no oil or grease to run slip free
- No need to re-tension the belts
- Compact maintenance free design
- Modified curvilinear tooth profile
- Positive tooth engagement eliminating slippage and speed variation on high torque application
- Low installation tension reducing loads on other power transmission components (i.e., bearings, gearing, motors, etc.)
- Delivers power up to speeds of 10,000 FPM (standard hardware is rated for 6,500 FPM). Contact Dodge if speeds greater than 6500 FPM are required.
- Higher power ratings than comparable timing belts, making HT500 suited to replace chain drives
- Wide range of stock parts available

Dodge HT500 belts utilize materials that achieve the highest standard of quality and performance in the industry allowing the superior torque capacity needed for high perfomance

- Belt backing is polyurethane designed for maximum resistance to environmental conditions, oil, grease, and high temperatures
- The belt's carbon fiber cords provide superior tension and torque transmission preventing belt shrinkage and stretch
- Belt's construction helps reduce the belt installation tension increasing the life of the other mechanical components
- Belt's teeth are enclosed in a black nylon tooth face delivering resistance to abrasion and tooth's shear, increasing drive efficiency, belt and sprocket's life, and reducing noise
- Idlers can be used on the backside and front-side of the belt
- With our Taper-Lock bushing installation an easy on, easy off process is assured

* QD is a registered trademark of Emerson Electric

What does the sprocket bring to the Dodge synchronous drive system?

Synchronous belt drives run slip-free and are proven to be more efficient and provide better performance than v-belt drives. They also offer significant performance advantages over chain drives related to wear and elongation resistance, they require no lubrication and have broad applicability. It is not necessary to retension synchronous drives – a significant advantage over alternative drive solutions. HT500 synchronous drives can also operate in wet and oily environments.

Dodge HT500 synchronous sprockets are manufactured in North America with the highest quality standards.

Our design advantages:

- Positions belt center line closer to motor, reducer, and bearings reducing belt pull while potentially increasing the L10 life of bearings.
- Requires less shaft length than QD style products
- Offers more bore sizes per bushing size than QD style products
- Delivers more torque than QD style products
- Has no protruding flanges or bolt heads

The HT500 synchronous drive system has the potential to improve your overall power transmission package by increasing efficiency, lowering your maintenance cost, downtime, and belt pull to increase the L10 life of bearings.

The high torque HT500 synchronous drive product is our commitment to your success by providing you energy savings and overall cost reduction. Another TCO solution for the marketplace!

Features and benefits

Energy efficient, high torque belt drive system

The US Department of Energy encourages the use of synchronous belts in all motor installations to maintain an overall efficiency rating of 98% across a wide load range. The HT500 synchronous belt is designed to offer the energy efficiency of a synchronous belt drive in a compact design.

HT500 75 Hp drive Example
Energy savings = Annual energy use x (1 – n1/n2)

Mechanical drive comparison			
Application data		**V-belt drive**	**HT500 drive**
Motor Hp	75	Efficiency 93%	Efficiency 98%
RPM	1800	Status: Current	Status: New
Nameplate efficiency	95.4	263,920 kWh/yr x .93 = 245,446 kWh/yr 263,920 - 245,446 kWh/yr = 18,474 kWh/yr or 7%	263,920 kWh/yr x .98 = 258,642 kWh/yr 263,920 - 258,642 kWh/yr = 5,278 kWh/yr or 2%
Motor load	75%		
Estimated kW/hr rate	$0.10		
Estimated kW/hr use by motor	263,920 kWh/yr		
Duty cycle	Continuous 6000 hrs x yr (3 shifts)		
Efficiency loss kWh/yr and $USD		18,474 kWh/yr x $0.10 = $1,847.40 USD	5,278 kWh/yr x $0.10 = $527.80 USD
Kilowatt hour potential savings when Using HT500 synchronous drive system		**Energy Savings = 263,920 kWh/yr x (1 – 93/98) = 13,196 kWh/yr** **13,196 kWh/yr x $0.10**	
Potential energy saving gain from using HT500 synchronous drive system			**$1,319.60 USD**

Additional benefits from HT500

- No maintenance cost
- Zero slip
- Constant time, speed
- Positive engagement
- Less downtime

Our value added solution will not only save you time and money short term, but many years thereafter

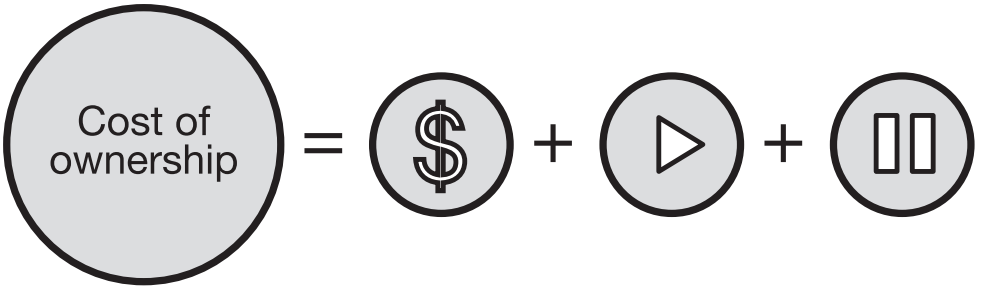

Features and benefits

Energy efficient, high torque belt drive system

The Institute Electrical and Electronics Engineers (IEEE) conducted a survey to identify major causes of motor failures; the chart below is an abstract from their Petro-Chemical paper PCIC-94-01. It concludes that 51% of all motor failure is attributed to bearing problems. By decreasing the belt pull and overall overhung load, a motor bearing will last longer.

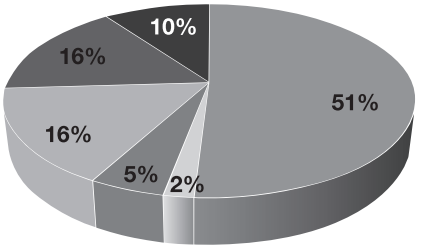

- Bearings
- Shaft couplings
- Rotor bar
- Stator winding
- External - environment, voltage and load. Likely to happen again.
- Unknown - no root failure analysis

HT500 75 Hp synchronous drive vs. V-belt drive comparison

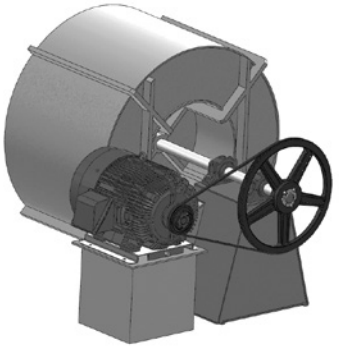

General application specifications

Hp:	75
Freq:	60 Hz
Enclosure:	TEFC
RPM:	1800
Frame:	365T (NEMA)
Ratio:	4:1
V-Belt SF:	1.45
Sync SF:	2.31

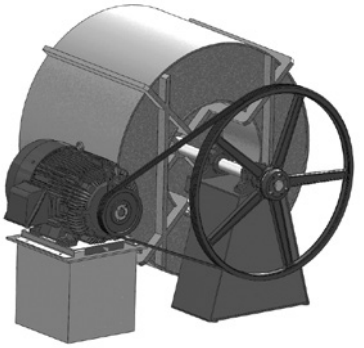

HT500 vs V-belt

Name	Description	Part number
Driver sprocket	14MX-50S-20-3020 HT500 sproket	482033
Driver bushing	3020 X 2-3/8-kW bushing	117124
Driven sprocket	14MX-200S-20-3525 HT500 sprocket	482049
Driven bushing	3525 X 2-7/16-KW bushing	119715
Belt(s) (Qty:1)	3360-14MX-20 HT500 belt	142765
Motor	75HP/60HZ/4P/365T frame	ECP4316T-4
Motor base	45B type B slide base	122118

Name	Description	Part number
Driver sheave	4-5V9.25-3020 sheave	111104
Driver bushing	3020 X 2-3/8-KW bushing	117124
Driven sheave	4-5V37.5-4040 sheave	111033
Driven bushing	4040 X 2-7/16-KW bushing	117322
Belt(s) (Qty:4)	5VX1400 belt	107184
Motor	75HP/60HZ/4P/365T frame	ECP4316T-4
Motor base	45B type B slide base	122118

Our Total Cost of Ownership solution!

We want to offer you added value solutions so you can achieve your maximum potential cost savings

- Face width reduced by 55%, allowing the ability to move drive closer to the motor and reduce the load on the bearing
- Used 1 belt instead of 4
- Cost reduction
- Reduced overall drive weight by 30%
- Belt pull reduced by 30% which increases the L10 life of the motor bearing

Features and benefits

HT500 sprocket and belt part nomenclature

Sprocket designation

8MX-22S-21 1008

- Sprocket pitch (8M or 14M)
- Sprocket tooth count
- 21mm width
- 1008 Taper-Lock bushing

Belt designation

1610 - 14MX-20

- Belt pitch length of 1610mm
- 14mm pitch
- 20mm wide

Specification

HT500 Taper-Lock sprockets

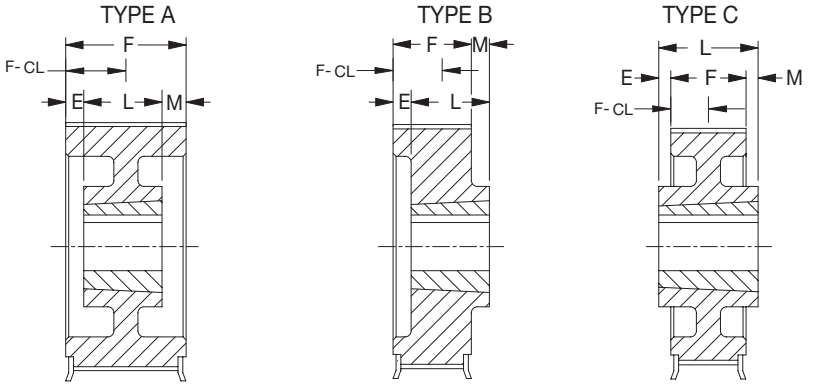

1 = Block 2 = Web 3 = Arms

The letter "F" in column "Type" indicates that sprocket has flanges

8M HT500 sprocket

Sprocket number	Part number	Number of teeth	Diameters (in.) P.D.	O.D.	Flange	Type	Dimensions (in.) E	L	M	Bore sizes Min.	Max	Approx. weight (lbs.)	Approx. WR^2 (lb-ft^2)
8MX-12						**F = .85"**							
8MX-22S-12-1008	**481875**	22	2.206	2.143	2.606	A1F*	0	0.88	0	1/2	1	0.4	0.0020
8MX-25S-12-1108	**481876**	25	2.506	2.443	2.906	A1F*	0	0.88	0	1/2	1	0.6	0.0038
8MX-26S-12-1108	**481877**	26	2.607	2.544	2.906	A1F*	0	0.88	0	1/2	1 1/8	0.6	0.0045
8MX-27S-12-1108	**481878**	27	2.707	2.644	3.207	A1F*	0	0.88	0	1/2	1 1/8	0.7	0.0054
8MX-28S-12-1108	**481879**	28	2.807	2.744	3.207	A1F*	0	0.88	0	1/2	1 1/8	0.9	0.0064
8MX-29S-12-1108	**481880**	29	2.907	2.844	3.090	A1F*	0	0.88	0	1/2	1 1/8	0.9	0.0075
8MX-30S-12-1108	**481881**	30	3.008	2.945	3.408	A1F*	0	0.88	0	1/2	1 1/8	1.0	0.0087
8MX-31S-12-1210	**481882**	31	3.108	3.045	3.328	A1F**	0	1.00	0	1/2	1 1/4	1.1	0.0101
8MX-32S-12-1210	**481883**	32	3.208	3.145	3.608	A1F**	0	1.00	0	1/2	1 1/4	1.1	0.0117
8MX-33S-12-1610	**481884**	33	3.308	3.245	3.566	A1F**	0	1.00	0	1/2	1 11/16	1.1	0.0152
8MX-34S-12-1610	**481885**	34	3.409	3.346	3.810	A1F**	0	1.00	0	1/2	1 11/16	1.2	0.0175
8MX-35S-12-1610	**481886**	35	3.509	3.446	3.805	A1F**	0	1.00	0	1/2	1 11/16	1.3	0.0200
8MX-36S-12-1610	**481887**	36	3.609	3.546	4.009	A1F**	0	1.00	0	1/2	1 11/16	1.4	0.0227
8MX-37S-12-1610	**481888**	37	3.709	3.646	4.044	A1F**	0	1.00	0	1/2	1 11/16	1.6	0.0257
8MX-38S-12-1610	**481889**	38	3.810	3.747	4.210	A1F**	0	1.00	0	1/2	1 11/16	1.7	0.0290
8MX-39S-12-1610	**481890**	39	3.910	3.847	4.410	A1F**	0	1.00	0	1/2	1 11/16	1.9	0.0326
8MX-40S-12-2012	**481891**	40	4.010	3.947	4.410	B1F	0	1.25	0,40	1/2	2 1/8	1.9	0.0413
8MX-41S-12-2012	**481892**	41	4.110	4.047	4.520	B1F	0	1.25	0,40	1/2	2 1/8	2.1	0.0462
8MX-42S-12-2012	**481893**	42	4.211	4.148	4.911	B1F	0	1.25	0,40	1/2	2 1/8	2.2	0.0515
8MX-45S-12-2012	**481894**	45	4.511	4.448	4.911	B1F	0	1.25	0,40	1/2	2 1/8	2.5	0.0702
8MX-48S-12-2012	**481895**	48	4.812	4.749	5.212	B1F	0	1.25	0,40	1/2	2 1/8	2.7	0.0936
8MX-50S-12-2012	**481896**	50	5.013	4.950	5.413	B1F	0	1.25	0,40	1/2	2 1/8	3.1	0.1120
8MX-53S-12-2012	**481897**	53	5.314	5.251	5.500	B1F	0	1.25	0,40	1/2	2 1/8	3.8	0.1447
8MX-56S-12-2012	**481898**	56	5.614	5.551	6.014	B1F	0	1.25	0,40	1/2	2 1/8	5.4	0.1839
8MX-60S-12-2012	**481899**	60	6.015	5.952	6.415	B1F	0	1.25	0,40	1/2	2 1/8	5.5	0.2480
8MX-63S-12-2012	**481900**	63	6.316	6.253	6.716	B2F	0	1.25	0,40	1/2	2 1/8	5.5	0.1409
8MX-67S-12-2012	**481901**	67	6.717	6.654	6.875	B2F	0	1.25	0,40	1/2	2 1/8	6.0	0.1798
8MX-71S-12-2012	**481902**	71	7.118	7.055	7.500	B2F	0	1.25	0,40	1/2	2 1/8	6.5	0.2263
8MX-75S-12-2012	**481903**	75	7.519	7.456	7.919	B2F	0	1.25	0,40	1/2	2 1/8	7.0	0.2814
8MX-80S-12-2012	**481904**	80	8.020	7.957	8.420	B2F	0	1.25	0,40	1/2	2 1/8	9.6	0.3640
8MX-90S-12-2012	**481905**	90	9.023	8.960	- - -	B2	0	1.25	0,40	1/2	2 1/8	9.4	0.5823
8MX-112S-12-2012	**481906**	112	11.229	11.166	- - -	B2	0	1.25	0,40	1/2	2 1/8	16.6	1.3980
8MX-140S-12-2012	**481907**	140	14.036	13.973	- - -	B3	0	1.25	0,40	1/2	2 1/8	17.3	1.1757
8MX-180S-12-2517	**481908**	180	18.046	17.983	- - -	B3	0	1.75	0,90	1/2	2 11/16	30.0	2.8678
8MX-224S-12-2517	**481909**	224	22.457	22.394	- - -	B3	0	1.75	0,90	1/2	2 11/16	41.2	6.2533

* F = .88" ** F = 1.00"

Specification

HT500 Taper-Lock sprockets

8M HT500 sprocket

Sprocket number	Part number	Number of teeth	Diameters (in.)			Type	Dimensions (in.)			Bore sizes		Approx. weight (lbs.)	Approx. WR^2 (lb-ft^2)
			P.D.	O.D.	Flange		E	L	M	Min.	Max		
8MX-21						**F = 1.20”**							
8MX-22S-21-1008	**481915**	22	2.206	2.143	2.606	A1F	0	0.88	0.32	1/2	1	0.4	0.0025
8MX-25S-21-1108	**481916**	25	2.506	2.443	2.906	A1F	0	0.88	0.32	1/2	1 1/8	0.6	0.0046
8MX-26S-21-1108	**481917**	26	2.607	2.544	2.906	A1F	0	0.88	0.32	1/2	1 1/8	0.6	0.0055
8MX-27S-21-1108	**481918**	27	2.707	2.644	3.207	A1F	0	0.88	0.32	1/2	1 1/8	0.7	0.0065
8MX-28S-21-1108	**481919**	28	2.807	2.744	3.207	A1F	0	0.88	0.32	1/2	1 1/8	0.9	0.0076
8MX-29S-21-1108	**481920**	29	2.907	2.844	3.090	A1F	0	0.88	0.32	1/2	1 1/8	1.0	0.0089
8MX-30S-21-1108	**481921**	30	3.008	2.945	3.408	A1F	0	0.88	0.32	1/2	1 1/8	1.1	0.0104
8MX-31S-21-1210	**481922**	31	3.108	3.045	3.328	A1F	0	1.00	0.20	1/2	1 1/4	1.3	0.0120
8MX-32S-21-1210	**481923**	32	3.208	3.145	3.608	A1F	0	1.00	0.20	1/2	1 1/4	1.4	0.0137
8MX-33S-21-1610	**481924**	33	3.308	3.245	3.566	A1F	0	1.00	0.20	1/2	1 11/16	1.5	0.0173
8MX-34S-21-1610	**481925**	34	3.409	3.346	3.810	A1F	0	1.00	0.20	1/2	1 11/16	1.6	0.0198
8MX-35S-21-1610	**481926**	35	3.509	3.446	3.805	A1F	0	1.00	0.20	1/2	1 11/16	1.6	0.0226
8MX-36S-21-1610	**481927**	36	3.609	3.546	4.009	A1F	0	1.00	0.20	1/2	1 11/16	1.8	0.0256
8MX-37S-21-1610	**481928**	37	3.709	3.646	4.044	A1F	0	1.00	0.20	1/2	1 11/16	1.8	0.0289
8MX-38S-21-1610	**481929**	38	3.810	3.747	4.210	A1F	0	1.00	0.20	1/2	1 11/16	1.9	0.0325
8MX-39S-21-1610	**481930**	39	3.910	3.847	4.410	A1F	0	1.00	0.20	1/2	1 11/16	1.9	0.0364
8MX-40S-21-2012	**481931**	40	4.010	3.947	4.410	A1F	0	1.25	0	1/2	2 1/8	2.3	0.0450
8MX-41S-21-2012	**481932**	41	4.110	4.047	4.520	A1F	0	1.25	0	1/2	2 1/8	2.3	0.0502
8MX-42S-21-2012	**481933**	42	4.211	4.148	4.911	A1F	0	1.25	0	1/2	2 1/8	2.5	0.0559
8MX-45S-21-2012	**481934**	45	4.511	4.448	4.911	A1F	0	1.25	0	1/2	2 1/8	2.9	0.0758
8MX-48S-21-2012	**481935**	48	4.812	4.749	5.212	A1F	0	1.25	0	1/2	2 1/8	3.4	0.1006
8MX-50S-21-2012	**481936**	50	5.013	4.950	5.413	A1F	0	1.25	0	1/2	2 1/8	4.0	0.1201
8MX-53S-21-2012	**481937**	53	5.314	5.251	5.500	A1F	0	1.25	0	1/2	2 1/8	4.5	0.1545
8MX-56S-21-2012	**481938**	56	5.614	5.551	6.014	A1F	0	1.25	0	1/2	2 1/8	4.9	0.1958
8MX-60S-21-2012	**481939**	60	6.015	5.952	6.415	A1F	0	1.25	0	1/2	2 1/8	6.4	0.2631
8MX-63S-21-2012	**481940**	63	6.316	6.253	6.716	B2F	0	1.25	0.05	1/2	2 1/8	7.7	0.1706
8MX-67S-21-2517	**481941**	67	6.717	6.654	6.875	B2F	0	1.75	0.55	1/2	2 11/16	8.3	0.2195
8MX-71S-21-2517	**481942**	71	7.118	7.055	7.500	B2F	0	1.75	0.55	1/2	2 11/16	8.7	0.2735
8MX-75S-21-2517	**481943**	75	7.519	7.456	7.919	B2F	0	1.75	0.55	1/2	2 11/16	9.2	0.3372
8MX-80S-21-2517	**481944**	80	8.020	7.957	8.420	B2F	0	1.75	0.55	1/2	2 11/16	9.8	0.4319
8MX-90S-21-2517	**481945**	90	9.023	8.960	- - -	B2	0	1.75	0.55	1/2	2 11/16	12.8	0.6794
8MX-112S-21-2517	**481946**	112	11.229	11.166	- - -	B2	0	1.75	0.55	1/2	2 11/16	19.4	1.5916
8MX-140S-21-2517	**481947**	140	14.036	13.973	- - -	B3	0	1.75	0.55	1/2	2 11/16	26.8	1.8107
8MX-180S-21-3020	**481948**	180	18.046	17.983	- - -	B3	0	2.00	0.80	7/8	3 1/4	36.6	4.4030
8MX-224S-21-3020	**481949**	224	22.457	22.394	- - -	B3	0	2.00	0.80	7/8	3 1/4	50.1	9.5391
8MX-36						**F = 1.86”**							
8MX-32S-36-1210	**481958**	32	3.208	3.145	3.608	A1F	0	1.00	0.86	1/2	1 1/4	1.7	0.0188
8MX-33S-36-1610	**481959**	33	3.308	3.245	3.566	A1F	0	1.00	0.86	1/2	1 11/16	1.7	0.0223
8MX-34S-36-1610	**481960**	34	3.409	3.346	3.810	A1F	0	1.00	0.86	1/2	1 11/16	1.8	0.0254
8MX-35S-36-1610	**481961**	35	3.509	3.446	3.805	A1F	0	1.00	0.86	1/2	1 11/16	1.8	0.0288
8MX-36S-36-1610	**481962**	36	3.609	3.546	4.009	A1F	0	1.00	0.86	1/2	1 11/16	2.1	0.0324
8MX-37S-36-1610	**481963**	37	3.709	3.646	4.044	A1F	0	1.00	0.86	1/2	1 11/16	2.1	0.0364
8MX-38S-36-1610	**481964**	38	3.810	3.747	4.210	A1F	0	1.00	0.86	1/2	1 11/16	2.4	0.0408
8MX-39S-36-1610	**481965**	39	3.910	3.847	4.410	A1F	0	1.00	0.86	1/2	1 11/16	2.4	0.0455
8MX-40S-36-2012	**481966**	40	4.010	3.947	4.410	A1F	0	1.25	0.61	1/2	2 1/8	2.5	0.0547
8MX-41S-36-2012	**481967**	41	4.110	4.047	4.520	A1F	0	1.25	0.61	1/2	2 1/8	2.8	0.0608
8MX-42S-36-2012	**481968**	42	4.211	4.148	4.911	A1F	0	1.25	0.61	1/2	2 1/8	3.3	0.0675
8MX-45S-36-2012	**481969**	45	4.511	4.448	4.911	A1F	0	1.25	0.61	1/2	2 1/8	3.4	0.0905
8MX-48S-36-2012	**481970**	48	4.812	4.749	5.212	A1F	0	1.25	0.61	1/2	2 1/8	5.1	0.1190

* F = .88"

Specification

HT500 Taper-Lock sprockets

8M HT500 sprocket

Sprocket number	Part number	Number of teeth	Diameters (in.)			Type	Dimensions (in.)			Bore sizes		Approx. weight (lbs.)	Approx. WR^2 (lb-ft^2)
			P.D.	O.D.	Flange		E	L	M	Min.	Max		
8MX-36						**F = 1.86”**							
8MX-50S-36-2012	**481971**	50	5.013	4.950	5.413	A1F	0	1.25	0.61	1/2	2 1/8	5.1	0.1413
8MX-53S-36-2012	**481972**	53	5.314	5.251	5.500	A1F	0	1.25	0.61	1/2	2 1/8	6.0	0.1804
8MX-56S-36-2012	**481973**	56	5.614	5.551	6.014	A1F	0	1.25	0.61	1/2	2 1/8	6.6	0.2271
8MX-60S-36-2517	**481974**	60	6.015	5.952	6.415	A1F	0	1.75	0.11	1/2	2 11/16	8.0	0.3018
8MX-63S-36-2517	**481975**	63	6.316	6.253	6.716	A1F	0	1.75	0.11	1/2	2 11/16	9.3	0.3698
8MX-67S-36-2517	**481976**	67	6.717	6.654	6.875	A2F	0	1.75	0.11	1/2	2 11/16	10.0	0.2896
8MX-71S-36-2517	**481977**	71	7.118	7.055	7.500	A2F	0	1.75	0.11	1/2	2 11/16	12.0	0.3579
8MX-75S-36-2517	**481978**	75	7.519	7.456	7.919	A2F	0	1.75	0.11	1/2	2 11/16	13.3	0.4378
8MX-80S-36-3020	**481979**	80	8.020	7.957	8.420	B2F	0	2.00	0.14	7/8	3 1/4	15.3	0.5851
8MX-90S-36-3020	**481980**	90	9.023	8.960	- - -	B2	0	2.00	0.14	7/8	3 1/4	20.9	0.8894
8MX-112S-36-3020	**481981**	112	11.229	11.166	- - -	B2	0	2.00	0.14	7/8	3 1/4	29.7	1.9883
8MX-140S-36-3020	**481982**	140	14.036	13.973	- - -	B3	0	2.00	0.14	7/8	3 1/4	39.3	2.8686
8MX-180S-36-3020	**481983**	180	18.046	17.983	- - -	B3	0	2.00	0.14	7/8	3 1/4	48.9	6.9025
8MX-224S-36-3525	**481984**	224	22.457	22.394	- - -	B3	0	2.25	0.64	1 3/16	3 15/16	92.2	14.9010
8MX-62						**F = 2.91”**							
8MX-34S-62-1610	**481996**	34	3.409	3.346	3.810	A1F	0	1.00	1.91	1/2	1 11/16	5.0	0.0380
8MX-36S-62-1610	**481997**	36	3.609	3.546	4.009	A1F	0	1.00	1.91	1/2	1 11/16	5.3	0.0484
8MX-38S-62-1610	**481998**	38	3.812	3.747	4.210	A1F	0	1.00	1.91	1/2	1 11/16	5.6	0.0607
8MX-40S-62-2012	**481999**	40	4.010	3.947	4.410	A1F	0	1.25	1.66	1/2	2 1/8	5.9	0.0749
8MX-42S-62-2012	**482000**	42	4.211	4.148	4.911	A1F	0	1.25	1.66	1/2	2 1/8	6.1	0.0919
8MX-45S-62-2012	**482001**	45	4.511	4.448	4.911	A1F	0	1.25	1.66	1/2	2 1/8	6.5	0.1226
8MX-48S-62-2517	**482002**	48	4.812	4.749	5.212	A1F	0	1.75	1.16	1/2	2 11/16	6.6	0.1594
8MX-50S-62-2517	**482003**	50	5.013	4.950	5.413	A1F	0	1.75	1.16	1/2	2 11/16	6.7	0.1891
8MX-53S-62-2517	**482004**	53	5.314	5.251	5.500	A1F	0	1.75	1.16	1/2	2 11/16	6.9	0.2412
8MX-56S-62-2517	**482005**	56	5.614	5.551	6.014	A1F	0	1.75	1.16	1/2	2 11/16	7.2	0.3034
8MX-60S-62-3020	**482006**	60	6.015	5.952	6.415	A1F	0	2.00	0.91	7/8	3 1/4	8.9	0.4298
8MX-63S-62-3020	**482007**	63	6.316	6.253	6.716	A1F	0	2.00	0.91	7/8	3 1/4	10.3	0.5261
8MX-67S-62-3020	**482008**	67	6.717	6.654	6.875	A1F	0	2.00	0.91	7/8	3 1/4	11.0	0.6781
8MX-71S-62-3020	**482009**	71	7.118	7.055	7.500	A1F	0	2.00	0.91	7/8	3 1/4	13.5	0.8605
8MX-75S-62-3020	**482010**	75	7.519	7.456	7.919	A1F	0	2.00	0.91	7/8	3 1/4	15.4	1.0770
8MX-80S-62-3020	**482011**	80	8.020	7.957	8.420	A1F	0	2.00	0.91	7/8	3 1/4	23.0	1.4016
8MX-90S-62-3020	**482012**	90	9.023	8.960	- - -	A2	0	2.00	0.91	7/8	3 1/4	32.7	1.2239
8MX-112S-62-3020	**482013**	112	11.229	11.166	- - -	A2	0	2.00	0.91	7/8	3 1/4	38.9	2.6610
8MX-140S-62-3525	**482014**	140	14.036	13.973	- - -	A2	0	2.25	0.66	1 3/16	3 15/16	54.5	6.0574
8MX-180S-62-3525	**482015**	180	18.046	17.983	- - -	A3	0	2.25	0.66	1 3/16	3 15/16	68.2	10.995
8MX-224S-62-3525	**482016**	224	22.457	22.394	- - -	A3	0	2.25	0.66	1 3/16	3 15/16	92.3	23.619

Specification

HT500 Taper-Lock sprockets

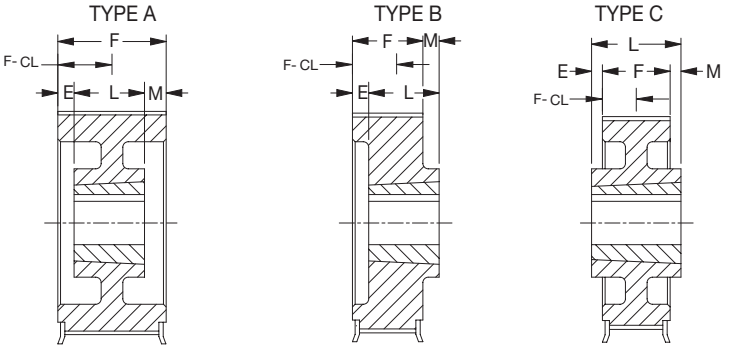

TYPE AF TYPE BF TYPE CF

1 = Block 2 = Web 3 = Arms

The letter "F" in column "Type" indicates that sprocket has flanges

14M HT500 sprockets

Sprocket number	Part number	Number of teeth	Diameters (in.)			Type	Dimensions (in.)			Bore sizes		Approx. weight (lbs.)	Approx. WR^2 (lb-ft^2)
			P.D.	O.D.	Flange		E	L	M	Min.	Max		
14MX-28S-20-2012	**482017**	28	4.912	4.802	5.402	A1F	0	1.25	0.11	1/2	2 1/8	3.9	0.0922
14MX-29S-20-2012	**482018**	29	5.088	4.978	5.763	A1F	0	1.25	0.11	1/2	2 1/8	4.5	0.1082
14MX-30S-20-2012	**482019**	30	5.263	5.153	5.763	A1F	0	1.25	0.11	1/2	2 1/8	4.8	0.1261
14MX-31S-20-2012	**482020**	31	5.439	5.329	6.114	A1F	0	1.25	0.11	1/2	2 1/8	5.5	0.1462
14MX-32S-20-2012	**482021**	32	5.614	5.504	6.114	A1F	0	1.25	0.11	1/2	2 1/8	5.9	0.1686
14MX-33S-20-2012	**482022**	33	5.790	5.680	6.465	A1F	0	1.25	0.11	1/2	2 1/8	6.3	0.1934
14MX-34S-20-2012	**482023**	34	5.965	5.855	6.465	A1F	0	1.25	0.11	1/2	2 1/8	6.9	0.2209
14MX-35S-20-2012	**482024**	35	6.141	6.031	6.816	A1F	0	1.25	0.11	1/2	2 1/8	7.3	0.2512
14MX-36S-20-2517	**482025**	36	6.316	6.206	6.816	B1F	0	1.75	0.39	1/2	2 11/16	7.6	0.2836
14MX-37S-20-2517	**482026**	37	6.492	6.382	7.167	B1F	0	1.75	0.39	1/2	2 11/16	8.2	0.3200
14MX-38S-20-2517	**482027**	38	6.667	6.557	7.167	B1F	0	1.75	0.39	1/2	2 11/16	8.8	0.3599
14MX-39S-20-2517	**482028**	39	6.842	6.732	7.518	B1F	0	1.75	0.39	1/2	2 11/16	9.8	0.4033
14MX-40S-20-2517	**482029**	40	7.018	6.908	7.518	B1F	0	1.75	0.39	1/2	2 11/16	10.1	0.4505
14MX-43S-20-2517	**482030**	43	7.544	7.434	8.044	B1F	0	1.75	0.39	1/2	2 11/16	11.7	0.6172
14MX-45S-20-3020	**482031**	45	7.895	7.785	8.395	B1F	0	2.00	0.64	7/8	3 1/4	13.5	0.9146
14MX-48S-20-3020	**482032**	48	8.421	8.311	8.941	B1F	0	2.00	0.64	7/8	3 1/4	16.4	1.2146
14MX-50S-20-3020	**482033**	50	8.772	8.662	9.292	B1F	0	2.00	0.64	7/8	3 1/4	18.2	1.4519
14MX-53S-20-3020	**482034**	53	9.299	9.189	9.688	B1F	0	2.00	0.64	7/8	3 1/4	20.5	1.8705
14MX-56S-20-3525	**482035**	56	9.825	9.715	10.355	B1F	0	2.50	1.14	1 3/16	3 15/16	23.1	2.3648
14MX-60S-20-3525	**482036**	60	10.527	10.417	11.067	B1F	0	2.50	1.14	1 3/16	3 15/16	27.4	3.1852
14MX-63S-20-3525	**482037**	63	11.053	10.943	11.593	B1F	0	2.50	1.14	1 3/16	3 15/16	30.2	3.9274
14MX-67S-20-3525	**482038**	67	11.755	11.645	12.500	B1F	0	2.50	1.14	1 3/16	3 15/16	31.2	5.1094
14MX-71S-20-3525	**482039**	71	12.457	12.347	13.066	B2F	0	2.50	1.14	1 3/16	3 15/16	32.5	2.6422
14MX-75S-20-3525	**482040**	75	13.158	13.048	13.731	B2F	0	2.50	1.14	1 3/16	3 15/16	36.1	3.2558
14MX-80S-20-3525	**482041**	80	14.036	13.926	14.620	B2F	0	2.50	1.14	1 3/16	3 15/16	38.7	4.1694
14MX-90S-20-3525	**482042**	90	15.790	15.680	- - -	B2	0	2.50	1.14	1 3/16	3 15/16	41.3	6.5536
14MX-112S-20-3525	**482043**	112	19.650	19.540	- - -	B3	0	2.50	1.14	1 3/16	3 15/16	59.6	8.7315
14MX-126S-20-3525	**482044**	126	22.106	21.996	- - -	B3	0	2.50	1.14	1 3/16	3 15/16	58.1	13.253
14MX-140S-20-3525	**482045**	140	24.562	24.452	- - -	B3	0	2.50	1.00	1 3/16	3 15/16	94.8	19.265
14MX-154S-20-3525	**482046**	154	27.019	26.909	- - -	B3	0	2.50	1.14	1 3/16	3 15/16	73.4	27.038
14MX-168S-20-3525	**482047**	168	29.475	29.365	- - -	B3	0	2.50	1.00	1 3/16	3 15/16	99.5	36.864
14MX-180S-20-3525	**482048**	180	31.580	31.470	- - -	B3	0	2.50	1.00	1 3/16	3 15/16	107.3	47.142
14MX-200S-20-3525	**482049**	200	35.089	34.979	- - -	B3	0	2.50	1.00	1 3/16	3 15/16	119.0	68.655
14MX-224S-20-4030	**482050**	224	39.300	39.190	- - -	B3	0	3.00	1.50	1 7/16	4 7/16	150.2	102.931
14MX-37						**F = 2.06"**							
14MX-28S-37-2012	**482052**	28	4.912	4.802	5.402	A1F	0	1.25	0.81	1/2	2 1/8	4.2	0.1180
14MX-29S-37-2517	**482053**	29	5.088	4.978	5.763	A1F	0	1.75	0.31	1/2	2 11/16	4.7	0.1367
14MX-30S-37-2517	**482054**	30	5.263	5.153	5.763	A1F	0	1.75	0.31	1/2	2 11/16	5.0	0.1587
14MX-31S-37-2517	**482055**	31	5.439	5.329	6.114	A1F	0	1.75	0.31	1/2	2 11/16	6.0	0.1831
14MX-32S-37-2517	**482056**	32	5.614	5.504	6.114	A1F	0	1.75	0.31	1/2	2 11/16	7.2	0.2102
14MX-33S-37-2517	**482057**	33	5.790	5.680	6.465	A1F	0	1.75	0.31	1/2	2 11/16	7.5	0.2401

Specification

HT500 Taper-Lock sprockets

14M HT500 sprockets

Sprocket number	Part number	Number of teeth	Diameters (in.) P.D.	O.D.	Flange	Type	Dimensions (in.) E	L	M	Bore sizes Min.	Max	Approx. weight (lbs.)	Approx. WR^2 (lb-ft^2)
14MX-37						**F = 2.06”**							
14MX-34S-37-2517	**482058**	34	5.965	5.855	6.465	A1F	0	1.75	0.31	1/2	2 11/16	7.8	0.2730
14MX-35S-37-2517	**482059**	35	6.141	6.031	6.816	A1F	0	1.75	0.31	1/2	2 11/16	8.3	0.3091
14MX-36S-37-2517	**482060**	36	6.316	6.206	6.816	A1F	0	1.75	0.31	1/2	2 11/16	8.8	0.3487
14MX-37S-37-2517	**482061**	37	6.492	6.382	7.167	A1F	0	1.75	0.31	1/2	2 11/16	9.3	0.3919
14MX-38S-37-3020	**482062**	38	6.667	6.557	7.167	A1F	0	2.00	0.06	7/8	3 1/4	10.8	0.5016
14MX-39S-37-3020	**482063**	39	6.842	6.732	7.518	A1F	0	2.00	0.06	7/8	3 1/4	11.9	0.5620
14MX-40S-37-3020	**482064**	40	7.018	6.908	7.518	A1F	0	2.00	0.06	7/8	3 1/4	12.2	0.6277
14MX-43S-37-3020	**482065**	43	7.544	7.434	8.044	A1F	0	2.00	0.06	7/8	3 1/4	12.5	0.8589
14MX-45S-37-3020	**482066**	45	7.895	7.785	8.395	A1F	0	2.00	0.06	7/8	3 1/4	15.8	1.0447
14MX-48S-37-3020	**482067**	48	8.421	8.311	8.941	A1F	0	2.00	0.06	7/8	3 1/4	18.7	1.3774
14MX-50S-37-3020	**482068**	50	8.772	8.662	9.292	A1F	0	2.00	0.06	7/8	3 1/4	21.1	1.6394
14MX-53S-37-3020	**482069**	53	9.299	9.189	9.688	A1F	0	2.00	0.06	7/8	3 1/4	24.7	2.0997
14MX-56S-37-3525	**482070**	56	9.825	9.715	10.355	B1F	0	2.50	0.44	1 3/16	3 15/16	28.2	2.6416
14MX-60S-37-3525	**482071**	60	10.527	10.417	11.067	B1F	0	2.50	0.44	1 3/16	3 15/16	32.2	3.5355
14MX-63S-37-3525	**482072**	63	11.053	10.943	11.593	B1F	0	2.50	0.44	1 3/16	3 15/16	42.8	4.3411
14MX-67S-37-3525	**482073**	67	11.755	11.645	12.500	B1F	0	2.50	0.44	1 3/16	3 15/16	43.5	5.6192
14MX-71S-37-3525	**482074**	71	12.457	12.347	13.066	B2F	0	2.50	0.44	1 3/16	3 15/16	44.1	3.5191
14MX-75S-37-3525	**482075**	75	13.158	13.048	13.731	B2F	0	2.50	0.44	1 3/16	3 15/16	45.5	4.3017
14MX-80S-37-3525	**482076**	80	14.036	13.926	14.620	B2F	0	2.50	0.44	1 3/16	3 15/16	48.7	5.4564
14MX-90S-37-3525	**482077**	90	15.790	15.680	- - -	B2	0	2.50	0.44	1 3/16	3 15/16	53.3	8.4295
14MX-112S-37-3525	**482078**	112	19.650	19.540	- - -	B3	0	2.50	0.44	1 3/16	3 15/16	87.0	14.200
14MX-126S-37-3525	**482079**	126	22.106	21.996	- - -	B3	0	2.50	0.44	1 3/16	3 15/16	76.3	21.539
14MX-140S-37-3525	**482080**	140	24.562	24.452	- - -	B3	0	2.50	0.44	1 3/16	3 15/16	100.2	31.267
14MX-154S-37-3525	**482081**	154	27.019	26.909	- - -	B3	0	2.50	0.44	1 3/16	3 15/16	100.2	43.807
14MX-168S-37-4030	**482082**	168	29.475	29.365	- - -	B3	0	3.00	0.94	1 7/16	4 7/16	179.0	59.582
14MX-180S-37-4030	**482083**	180	31.580	31.470	- - -	B3	0	3.00	0.94	1 7/16	4 7/16	182.3	76.076
14MX-200S-37-4030	**482084**	200	35.089	34.979	- - -	B3	0	3.00	0.94	1 7/16	4 7/16	185.4	100.527
14MX-224S-37-4030	**482085**	224	39.300	39.190	- - -	B3	0	3.00	0.94	1 7/16	4 7/16	229.1	165.266
14MX-68						**F = 3.33”**							
14MX-28S-68-2517	**482096**	28	4.912	4.802	5.402	A1F	0	1.75	1.58	1/2	2 11/16	13.5	0.1804
14MX-29S-68-2517	**482097**	29	5.088	4.978	5.763	A1F	0	1.75	1.58	1/2	2 11/16	13.8	0.2101
14MX-30S-68-2517	**482098**	30	5.263	5.153	5.763	A1F	0	1.75	1.58	1/2	2 11/16	14.0	0.2433
14MX-31S-68-2517	**482099**	31	5.439	5.329	6.114	A1F	0	1.75	1.58	1/2	2 11/16	14.3	0.2802
14MX-32S-68-2517	**482100**	32	5.614	5.504	6.114	A1F	0	1.75	1.58	1/2	2 11/16	14.6	0.3211
14MX-33S-68-2517	**482101**	33	5.790	5.680	6.465	A1F	0	1.75	1.58	1/2	2 11/16	14.9	0.3663
14MX-34S-68-2517	**482102**	34	5.965	5.855	6.465	A1F	0	1.75	1.58	1/2	2 11/16	15.2	0.4160
14MX-35S-68-3020	**482103**	35	6.141	6.031	6.816	A1F	0	2.00	1.33	7/8	3 1/4	15.5	0.4692
14MX-36S-68-3020	**482104**	36	6.316	6.206	6.816	A1F	0	2.00	1.33	7/8	3 1/4	15.8	0.5285
14MX-37S-68-3020	**482105**	37	6.492	6.382	7.167	A1F	0	2.00	1.33	7/8	3 1/4	16.1	0.5932
14MX-38S-68-3020	**482106**	38	6.667	6.557	7.167	A1F	0	2.00	1.33	7/8	3 1/4	16.4	0.6635
14MX-39S-68-3020	**482107**	39	6.842	6.732	7.518	A1F	0	2.00	1.33	7/8	3 1/4	16.7	0.7400
14MX-40S-68-3020	**482108**	40	7.018	6.908	7.518	A1F	0	2.00	1.33	7/8	3 1/4	17.0	0.8239
14MX-43S-68-3020	**482109**	43	7.544	7.434	8.044	A1F	0	2.00	1.33	7/8	3 1/4	17.2	1.1187
14MX-45S-68-3020	**482110**	45	7.895	7.785	8.395	A1F	0	2.00	1.33	7/8	3 1/4	20.4	1.3552
14MX-48S-68-3525	**482111**	48	8.421	8.311	8.941	A1F	0	2.50	0.83	1 3/16	3 15/16	24.6	1.7697
14MX-50S-68-3525	**482112**	50	8.772	8.662	9.292	A1F	0	2.50	0.83	1 3/16	3 15/16	29.4	2.1032
14MX-53S-68-3525	**482113**	53	9.299	9.189	9.688	A1F	0	2.50	0.83	1 3/16	3 15/16	35.7	2.6902
14MX-56S-68-3525	**482114**	56	9.825	9.715	10.355	A1F	0	2.50	0.83	1 3/16	3 15/16	39.9	3.3944
14MX-60S-68-3525	**482115**	60	10.527	10.417	11.067	A1F	0	2.50	0.83	1 3/16	3 15/16	50.6	4.5427
14MX-63S-68-3525	**482116**	63	11.053	10.943	11.593	A1F	0	2.50	0.83	1 3/16	3 15/16	58.0	5.5830
14MX-67S-68-3525	**482117**	67	11.755	11.645	12.500	A2F	0	2.50	0.83	1 3/16	3 15/16	60.0	4.4150
14MX-71S-68-3525	**482118**	71	12.457	12.347	13.066	A2F	0	2.50	0.83	1 3/16	3 15/16	63.3	5.4244
14MX-75S-68-3525	**482119**	75	13.158	13.048	13.731	A2F	0	2.50	0.83	1 3/16	3 15/16	68.6	6.5958

Specification

HT500 Taper-Lock sprockets

14M HT500 sprockets

Sprocket number	Part number	Number of teeth	Diameters (in.) P.D.	O.D.	Flange	Type	Dimensions (in.) E	L	M	Bore sizes Min.	Max	Approx. weight (lbs.)	Approx. WR^2 (lb-ft^2)
14MX-68						**F = 3.33”**							
14MX-80S-68-3525	**482120**	80	14.036	13.926	14.620	A2F	0	2.50	0.83	1 3/16	3 15/16	76.3	8.3123
14MX-90S-68-4030	**482121**	90	15.790	15.680	- - -	A2	0	3.00	0.33	1 7/16	4 7/16	82.6	12.782
14MX-112S-68-4030	**482122**	112	19.650	19.540	- - -	A3	0	3.00	0.33	1 7/16	4 7/16	100.4	23.778
14MX-140S-68-4030	**482123**	140	24.562	24.452	- - -	A3	0	3.00	0.33	1 7/16	4 7/16	190.0	52.002
14MX-168S-68-4535	**482124**	168	29.475	29.365	- - -	B3	0	3.50	0.17	1 15/16	4 15/16	239.1	98.636
14MX-180S-68-4535	**482125**	180	31.580	31.470	- - -	B3	0	3.50	0.17	1 15/16	4 15/16	250.6	125.733
14MX-200S-68-4535	**482126**	200	35.089	34.979	- - -	B3	0	3.50	0.17	1 15/16	4 15/16	262.5	182.222
14MX-224S-68-5040	**482127**	224	39.300	39.190	- - -	B3	0	4.00	0.67	2 7/16	5	350.0	271.707
14MX-90						**F = 4.20”**							
14MX-35S-90-3020	**482141**	35	6.141	6.031	6.816	A1F	0	2.00	2.20	7/8	3 1/4	22.9	0.5884
14MX-36S-90-3020	**482142**	36	6.316	6.206	6.816	A1F	0	2.00	2.20	7/8	3 1/4	23.1	0.6633
14MX-37S-90-3020	**482143**	37	6.492	6.382	7.167	A1F	0	2.00	2.20	7/8	3 1/4	23.4	0.7449
14MX-38S-90-3020	**482144**	38	6.667	6.557	7.167	A1F	0	2.00	2.20	7/8	3 1/4	23.7	0.8338
14MX-39S-90-3020	**482145**	39	6.842	6.732	7.518	A1F	0	2.00	2.20	7/8	3 1/4	24.0	0.9303
14MX-40S-90-3020	**482146**	40	7.018	6.908	7.518	A1F	0	2.00	2.20	7/8	3 1/4	24.3	1.0349
14MX-43S-90-3525	**482147**	43	7.544	7.434	8.044	A1F	0	2.50	1.70	1 3/16	3 15/16	24.7	1.3910
14MX-45S-90-3525	**482148**	45	7.895	7.785	8.395	A1F	0	2.50	1.70	1 3/16	3 15/16	27.3	1.6846
14MX-48S-90-3525	**482149**	48	8.421	8.311	8.941	A1F	0	2.50	1.70	1 3/16	3 15/16	29.3	2.2089
14MX-50S-90-3525	**482150**	50	8.772	8.662	9.292	A1F	0	2.50	1.70	1 3/16	3 15/16	33.4	2.6208
14MX-53S-90-3525	**482151**	53	9.299	9.189	9.688	A1F	0	2.50	1.70	1 3/16	3 15/16	42.1	3.3442
14MX-56S-90-4030	**482152**	56	9.825	9.715	10.355	A1F	0	3.00	1.20	1 7/16	4 7/16	46.8	4.1952
14MX-60S-90-4030	**482153**	60	10.527	10.417	11.067	A1F	0	3.00	1.20	1 7/16	4 7/16	50.4	5.6011
14MX-63S-90-4030	**482154**	63	11.053	10.943	11.593	A1F	0	3.00	1.20	1 7/16	4 7/16	64.6	6.8708
14MX-67S-90-4030	**482155**	67	11.755	11.645	12.500	A1F	0	3.00	1.20	1 7/16	4 7/16	70.0	8.8919
14MX-71S-90-4030	**482156**	71	12.457	12.347	13.066	A1F	0	3.00	1.20	1 7/16	4 7/16	85.0	11.339
14MX-75S-90-4030	**482157**	75	13.158	13.048	13.731	A2F	0	3.00	1.20	1 7/16	4 7/16	86.7	14.669
14MX-80S-90-4030	**482158**	80	14.036	13.926	14.620	A2F	0	3.00	1.20	1 7/16	4 7/16	88.0	13.800
14MX-90S-90-4030	**482159**	90	15.790	15.680	- - -	A2	0	3.00	1.20	1 7/16	4 7/16	124.2	16.521
14MX-112S-90-4535	**482160**	112	19.650	19.540	- - -	A3	0	3.50	0.70	1 15/16	4 15/16	197.9	30.460
14MX-140S-90-5040	**482161**	140	24.562	24.452	- - -	A3	0	4.00	0.20	2 7/16	5	240.0	66.242
14MX-168S-90-6050	**482162**	168	29.475	29.365	- - -	B3	0	5.00	0.80	4 7/16	6	327.3	125.362
14MX-180S-90-6050	**482163**	180	31.580	31.470	- - -	B3	0	5.00	0.80	4 7/16	6	335.9	159.541
14MX-200S-90-6050	**482164**	200	35.089	34.979	- - -	B3	0	5.00	0.80	4 7/16	6	344.5	230.792
14MX-224S-90-6050	**482165**	224	39.300	39.190	- - -	B3	0	5.00	0.80	4 7/16	6	589.0	343.707
14MX-125						**F = 5.61”**							
14MX-50S-125-4535	**482182**	50	8.772	8.662	9.292	A1F	0	3.50	2.11	1 15/16	4 15/16	39.4	3.4090
14MX-52S-125-4535	**482183**	52	9.123	9.013	9.687	A1F	0	3.50	2.11	1 15/16	4 15/16	48.2	4.0199
14MX-53S-125-4535	**482184**	53	9.299	9.189	9.688	A1F	0	3.50	2.11	1 15/16	4 15/16	50.1	4.3540
14MX-56S-125-4535	**482185**	56	9.825	9.715	10.355	A1F	0	3.50	2.11	1 15/16	4 15/16	52.6	5.4811
14MX-60S-125-4535	**482186**	60	10.527	10.417	11.067	A1F	0	3.50	2.11	1 15/16	4 15/16	63.3	5.8084
14MX-63S-125-4535	**482187**	63	11.053	10.943	11.593	A1F	0	3.50	2.11	1 15/16	4 15/16	77.2	8.9504
14MX-67S-125-4535	**482188**	67	11.755	11.645	12.500	A1F	0	3.50	2.11	1 15/16	4 15/16	93.8	11.555
14MX-71S-125-5040	**482189**	71	12.457	12.347	13.066	A1F	0	4.00	1.61	2 7/16	5	113.2	14.674
14MX-75S-125-5040	**482190**	75	13.158	13.048	13.731	A1F	0	4.00	1.61	2 7/16	5	132.8	18.431
14MX-80S-125-5040	**482191**	80	14.036	13.926	14.620	A1F	0	4.00	1.61	2 7/16	5	137.0	24.109
14MX-90S-125-5040	**482192**	90	15.790	15.680	- - -	A2	0	4.00	1.61	2 7/16	5	141.8	23.571
14MX-112S-125-6050	**482193**	112	19.650	19.540	- - -	A2	0	5.00	0.61	4 7/16	6	210.6	51.582
14MX-140S-125-6050	**482194**	140	24.562	24.452	- - -	A2	0	5.00	0.61	4 7/16	6	270.3	114.827
14MX-168S-125-7060	**482195**	168	29.475	29.365	- - -	B3	0	6.00	0.39	4 15/16	7	345.2	168.072
14MX-180S-125-7060	**482196**	180	31.580	31.470	- - -	B3	0	6.00	0.39	4 15/16	7	365.2	213.396
14MX-200S-125-7060	**482197**	200	35.089	34.979	- - -	B3	0	6.00	0.39	4 15/16	7	373.5	307.825
14MX-224S-125-7060	**482198**	224	39.300	39.190	- - -	B3	0	6.00	0.39	4 15/16	7	482.3	457.347

Specification

HT500 MPB sprockets

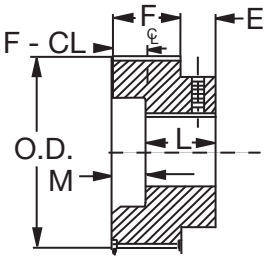

Type 6F
The letter "F" shown with type 6F indicates that sprocket has flanges

8MX sprockets

Sprocket number	Part number	Number of teeth	Diameters (in.) P.D.	O.D.	Flange	Dimensions (in.) E	L	M	Bore sizes Min.	Max	Approx. weight (lbs.)	Approx. WR^2 (lb-ft^2)
8MX-12					**F = .85"**						**Type 6F**	
8MX-22S-12-MPB	**481870**	22	2.206	2.143	2.606	0.46	1.31	0	0.50	1.00	0.9	0.0020
8MX-25S-12-MPB	**481871**	25	2.506	2.443	2.906	0.46	1.31	0	0.50	1.50	1.0	0.0041
8MX-28S-12-MPB	**481872**	28	2.807	2.744	3.207	0.46	1.31	0	0.50	1.75	1.4	0.0070
8MX-30S-12-MPB	**481873**	30	3.008	2.945	3.408	0.57	1.42	0	0.27	1.13	1.6	0.0088
8MX-32S-12-MPB	**481874**	32	3.208	3.145	3.608	0.57	1.42	0	0.50	2.00	1.7	0.0130
8MX-21					**F = 1.20"**						**Type 6F**	
8MX-22S-21-MPB	**481910**	22	2.206	2.143	2.606	0.45	1.65	0	0.50	1.19	1.1	0.0025
8MX-25S-21-MPB	**481911**	25	2.506	2.443	2.906	0.45	1.65	0	0.50	1.50	1.4	0.0048
8MX-28S-21-MPB	**481912**	28	2.807	2.744	3.207	0.45	1.65	0	0.50	1.75	1.8	0.0081
8MX-30S-21-MPB	**481913**	30	3.008	2.945	3.408	0.57	1.77	0	0.50	1.81	2.2	0.0112
8MX-32S-21-MPB	**481914**	32	3.208	3.145	3.608	0.57	1.77	0	0.50	2.00	2.5	0.0149
8MX-36					**F = 1.86"**						**Type 6F**	
8MX-22S-36-MPB	**481950**	22	2.206	2.143	2.606	0.58	2.44	0	0.50	1.19	1.0	0.0036
8MX-25S-36-MPB	**481951**	25	2.506	2.443	2.906	0.58	2.44	0	0.50	1.50	1.3	0.0066
8MX-28S-36-MPB	**481952**	28	2.807	2.744	3.207	0.58	2.44	0	0.50	1.75	1.5	0.0108
8MX-30S-36-MPB	**481953**	30	3.008	2.945	3.408	0.58	2.44	0	0.50	1.81	1.7	0.0147
8MX-32S-36-MPB	**481954**	32	3.208	3.145	3.608	0.58	2.44	0	0.50	2.00	3.9	0.0193
8MX-34S-36-MPB	**481955**	34	3.409	3.346	3.810	0.59	2.45	0	0.50	2.13	4.3	0.0269
8MX-36S-36-MPB	**481956**	36	3.609	3.546	4.009	0.65	2.51	0	0.50	2.31	4.3	0.0344
8MX-38S-36-MPB	**481957**	38	3.810	3.747	4.210	0.65	2.51	0	0.50	2.44	4.4	0.0434
8MX-62					**F = 2.91"**						**Type 6F**	
8MX-22S-62-MPB	**481985**	22	2.206	2.143	2.606	0.65	3.56	0	1.00	1.19	3.2	0.0059
8MX-25S-62-MPB	**481986**	25	2.506	2.443	2.906	0.65	3.56	0	1.00	1.50	3.3	0.0103
8MX-28S-62-MPB	**481987**	28	2.807	2.744	3.207	0.65	3.56	0	1.00	1.75	3.5	0.0168
8MX-30S-62-MPB	**481988**	30	3.008	2.945	3.408	0.59	3.50	0	1.00	1.81	4.0	0.0226
8MX-32S-62-MPB	**481989**	32	3.208	3.145	3.608	0.59	3.50	0	1.00	2.00	5.0	0.0297
8MX-34S-62-MPB	**481990**	34	3.409	3.346	3.810	0.59	3.50	0	1.00	2.13	5.7	0.0384
8MX-36S-62-MPB	**481991**	36	3.609	3.546	4.009	0.65	3.56	0	1.00	2.31	6.6	0.0488
8MX-38S-62-MPB	**481992**	38	3.812	3.747	4.210	0.65	3.56	0	1.00	2.44	7.4	0.0611
8MX-40S-62-MPB	**481993**	40	4.010	3.947	4.410	0.72	3.63	0	1.00	2.56	8.4	0.0757
8MX-42S-62-MPB	**481994**	42	4.211	4.148	4.911	0.72	3.63	0	1.00	2.75	9.6	0.0927
8MX-45S-62-MPB	**481995**	45	4.511	4.448	4.911	0.72	3.63	0	1.00	2.75	10.8	0.1235

Specification

HT500 MPB sprockets

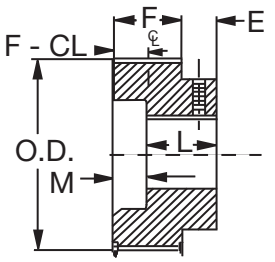

Type 6F
The letter "F" shown with type 6F indicates that sprocket has flanges

14MX sprockets

Sprocket number	Part number	Number of teeth	Diameters (in.) P.D.	O.D.	Flange	Dimensions (in.) E	L	M	Bore sizes Min.	Max	Approx. weight (lbs.)	Approx. WR^2 (lb-ft^2)
14MX-37					**F = 2.06"**						**Type 6F**	
14MX-28S-37-MPB	**482051**	28	4.912	4.802		0.80	2.86	0	1.00	2.94	11.70	0.1272
14MX-68					F = 3.33"						Type 6F	
14MX-28S-68-MPB	**482089**	28	4.912	4.802	5.402	0.80	4.13	0	1.00	2.94	13.4	0.1796
14MX-29S-68-MPB	**482090**	29	5.088	4.978	5.763	0.80	4.13	0	1.00	3.19	14.5	0.2081
14MX-30S-68-MPB	**482091**	30	5.263	5.153	5.763	0.80	4.13	0	1.00	3.19	15.7	0.2415
14MX-31S-68-MPB	**482092**	31	5.439	5.329	6.114	0.80	4.13	0	1.00	3.44	16.8	0.2768
14MX-32S-68-MPB	**482093**	32	5.614	5.504	6.114	0.80	4.13	0	1.00	3.44	18.0	0.3178
14MX-33S-68-MPB	**482094**	33	5.790	5.680	6.465	1.00	4.33	0	1.00	3.50	19.5	0.3626
14MX-34S-68-MPB	**482095**	34	5.965	5.855	6.465	1.00	4.33	0	1.00	3.50	21.1	0.4122
14MX-90					F = 4.20"						Type 6F	
14MX-28S-90-MPB	**482128**	28	4.912	4.802	5.402	0.94	5.14	0	1.50	2.94	17.4	0.2309
14MX-29S-90-MPB	**482129**	29	5.088	4.978	5.763	0.80	5.00	0	1.50	3.19	18.9	0.2684
14MX-30S-90-MPB	**482130**	30	5.263	5.153	5.763	0.80	5.00	0	1.50	3.19	20.3	0.3102
14MX-31S-90-MPB	**482131**	31	5.439	5.329	6.114	0.80	5.00	0	1.50	3.44	21.8	0.3566
14MX-32S-90-MPB	**482132**	32	5.614	5.504	6.114	0.80	5.00	0	1.50	3.44	23.2	0.4080
14MX-33S-90-MPB	**482133**	33	5.790	5.680	6.465	1.00	5.20	0	1.50	3.50	25.2	0.4648
14MX-34S-90-MPB	**482134**	34	5.965	5.855	6.465	1.00	5.20	0	1.50	3.50	27.2	0.5272
14MX-35S-90-MPB	**482135**	35	6.141	6.031	6.816	1.00	5.20	0	1.50	3.81	28.7	0.5956
14MX-36S-90-MPB	**482136**	36	6.316	6.206	6.816	1.00	5.20	0	1.50	3.81	30.3	0.6704
14MX-37S-90-MPB	**482137**	37	6.492	6.382	7.167	1.00	5.20	0	1.50	4.13	32.1	0.7521
14MX-38S-90-MPB	**482138**	38	6.667	6.557	7.167	1.00	5.20	0	1.50	4.13	33.9	0.8410
14MX-39S-90-MPB	**482139**	39	6.842	6.732	7.518	1.00	5.20	0	1.50	4.38	35.8	0.9375
14MX-40S-90-MPB	**482140**	40	7.018	6.908	6.518	1.00	5.20	0	1.50	4.38	37.7	1.0421
14MX-125					F = 5.61"						Type 6F	
14MX-28S-125-MPB	**482166**	28	4.912	4.802	5.402	0.89	6.50	0	1.50	2.94	22.0	0.3098
14MX-29S-125-MPB	**482167**	29	5.088	4.978	5.763	0.89	6.50	0	1.50	3.19	23.7	0.3599
14MX-30S-125-MPB	**482168**	30	5.263	5.153	5.763	0.89	6.50	0	1.50	3.19	25.4	0.4156
14MX-31S-125-MPB	**482169**	31	5.439	5.329	6.114	0.89	6.50	0	1.50	3.44	27.3	0.4697
14MX-32S-125-MPB	**482170**	32	5.614	5.504	6.114	0.89	6.50	0	1.50	3.44	39.2	0.5382
14MX-33S-125-MPB	**482171**	33	5.790	5.680	6.465	1.08	6.69	0	1.50	3.50	31.8	0.6138
14MX-34S-125-MPB	**482172**	34	5.965	5.855	6.465	1.08	6.69	0	1.50	3.50	34.3	0.6967
14MX-35S-125-MPB	**482173**	35	6.141	6.031	6.816	1.08	6.69	0	1.50	3.81	36.2	0.7877
14MX-36S-125-MPB	**482174**	36	6.316	6.206	6.816	1.08	6.69	0	1.50	3.81	38.0	0.8870
14MX-37S-125-MPB	**482175**	37	6.492	6.382	7.167	1.08	6.69	0	1.50	4.13	40.3	0.9953
14MX-38S-125-MPB	**482176**	38	6.667	6.557	7.167	1.08	6.69	0	1.50	4.13	42.5	1.1131
14MX-39S-125-MPB	**482177**	39	6.842	6.732	7.518	1.08	6.69	0	1.50	4.38	44.9	1.2283
14MX-40S-125-MPB	**482178**	40	7.018	6.908	7.518	1.08	6.69	0	1.50	4.38	47.2	1.3666
14MX-43S-125-MPB	**482179**	43	7.544	7.434	8.044	1.20	6.81	0	1.50	4.81	55.5	1.8507
14MX-45S-125-MPB	**482180**	45	7.895	7.785	8.395	1.20	6.81	0	1.50	5.00	61.3	2.2373
14MX-48S-125-MPB	**482181**	48	8.421	8.311	8.941	1.20	6.81	0	1.50	5.63	68.7	2.9260

Specification

HT500 sprockets for ACHE application Taper-Lock

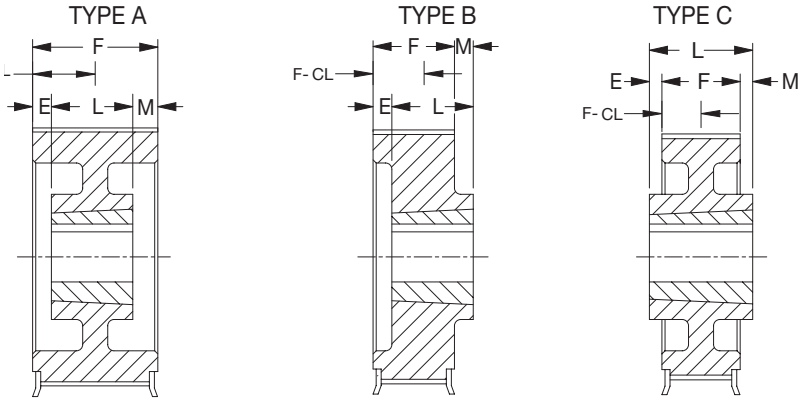

TYPE AF TYPE BF TYPE CF

1 = Block 2 = Web 3 = Arms

The letter "F" in column "Type" indicates that sprocket has flanges

ACHE HT500 sprockets

Sprocket number	Part number	Number of teeth	Diameters (in.) P.D.	O.D.	Flange	Type	L	M	Bore sizes Min.	Max	Approx. weight (lbs.)	Approx. WR^2 (lb-ft^2)
14MX-37						**F = 2.06"**						
F14MX-180S-37-3020	**482086**	180	31.580	31.470	- - -	B3	2.00	0.06	7/8	3 1/4	120.0	76.1453
F14MX-200S-37-3020	**482087**	200	35.086	34.979	- - -	B3	2.00	0.06	7/8	3 1/4	130.0	110.593
F14MX-224S-37-3020	**482088**	224	39.296	39.190	- - -	B3	2.00	0.06	7/8	3 1/4	177.0	165.315

Specification

HT500 sprockets for ACHE application QD

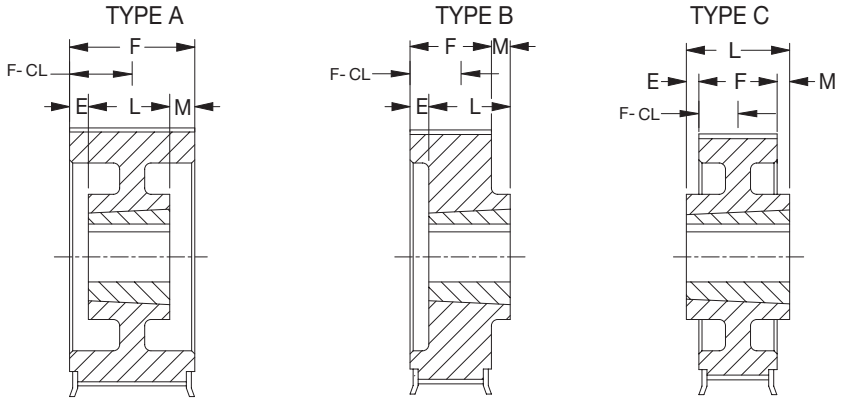

1 = Block 2 = Web 3 = Arms

The letter "F" in column "Type" indicates that sprocket has flanges

ACHE HT500 sprockets

Sprocket number	Part number	Number of teeth	Diameters (in.) P.D.	O.D.	Flange	Type	Dimensions (in.) E	L	M	Bore sizes Min.	Max	Approx. weight (lbs.)
8MX-21						**F = 1.20"**						
F8MX-36S-21-SH	**482199**	36	3.609	3.546	4.009	A1F	0	0.81	0.39	1/2	1 5/8	2.1
F8MX-38S-21-SH	**482200**	38	3.810	3.747	4.210	A1F	0	0.81	0.39	1/2	1 5/8	2.1
F8MX-40S-21-SH	**482201**	40	4.010	3.947	4.410	A1F	0	0.81	0.39	1/2	1 5/8	2.3
F8MX-42S-21-SH	**482202**	42	4.211	4.148	4.911	A1F	0	0.81	0.39	1/2	1 5/8	2.5
F8MX-140S-21-SF	**482203**	140	14.036	13.973	- - -	B2	0	1.25	0.05	1/2	2 13/16	25.0
F8MX-168S-21-SF	**482204**	168	16.843	16.780	- - -	B3	0	1.25	0.05	1/2	2 13/16	33.8
F8MX-180S-21-SF	**482205**	180	18.046	17.983	- - -	B3	0	1.25	0.05	1/2	2 13/16	36.6
F8MX-224S-21-E	**482206**	224	22.457	22.394	- - -	B3	0	1.63	0.43	7/8	3 1/2	50.1
14MX-20						**F = 1.36"**						
F14MX-28S-20-SK	**482207**	28	4.912	4.802	5.402	A1F	0	1.25	0.11	1/2	2 1/2	3.9
F14MX-29S-20-SK	**482208**	29	5.088	4.978	5.763	A1F	0	1.25	0.11	1/2	2 1/2	4.5
F14MX-30S-20-SK	**482209**	30	5.263	5.153	5.763	A1F	0	1.25	0.11	1/2	2 1/2	4.8
F14MX-31S-20-SK	**482210**	31	5.439	5.329	6.114	A1F	0	1.25	0.11	1/2	2 1/2	5.5
F14MX-32S-20-SK	**482211**	32	5.614	5.504	6.114	A1F	0	1.25	0.11	1/2	2 1/2	5.9
F14MX-33S-20-SK	**482212**	33	5.790	5.680	6.465	A1F	0	1.25	0.11	1/2	2 1/2	6.3
F14MX-34S-20-SK	**482213**	34	5.965	5.855	6.465	A1F	0	1.25	0.11	1/2	2 1/2	6.9
F14MX-35S-20-SK	**482214**	35	6.141	6.031	6.816	A1F	0	1.25	0.11	1/2	2 1/2	7.3
F14MX-36S-20-SF	**482215**	36	6.315	6.206	6.816	A1F	0	1.25	0.11	1/2	2 15/16	7.9
F14MX-140S-20-E	**482216**	140	24.560	24.452	- - -	B3	0	1.63	0.27	7/8	3 1/2	66.1
F14MX-168S-20-F	**482217**	168	29.472	29.365	- - -	C3	0.56	2.50	0.58	1	3 15/16	90.0
F14MX-180S-20-F	**482218**	180	31.580	31.470	- - -	B3	0	2.50	1.14	1	3 15/16	107.3
F14MX-200S-20-F	**482219**	200	35.086	34.979	- - -	C3	0.88	2.50	0.26	1	3 15/16	119.0
F14MX-224S-20-F	**482220**	224	39.300	39.190	- - -	B3	0	2.50	1.14	1	3 15/16	125.0
14MX-37						**F = 2.06"**						
F14MX-28S-37-SK	**482221**	28	4.912	4.802	5.402	A1F	0.81	1.25	0	1/2	2 1/2	4.2
F14MX-29S-37-SK	**482222**	29	5.088	4.978	5.763	A1F	0.81	1.25	0	1/2	2 1/2	4.7
F14MX-30S-37-SK	**482223**	30	5.263	5.153	5.763	A1F	0.81	1.25	0	1/2	2 1/2	5.0
F14MX-31S-37-SK	**482224**	31	5.439	5.329	6.114	A1F	0	1.25	0.81	1/2	2 1/2	6.0
F14MX-32S-37-SK	**482225**	32	5.614	5.504	6.114	A1F	0	1.25	0.81	1/2	2 1/2	7.1
F14MX-33S-37-SK	**482226**	33	5.790	5.680	6.465	A1F	0	1.25	0.81	1/2	2 1/2	7.5
F14MX-34S-37-SK	**482227**	34	5.965	5.855	6.465	A1F	0	1.25	0.81	1/2	2 1/2	7.8
F14MX-35S-37-SK	**482228**	35	6.141	6.031	6.816	A1F	0	1.25	0.81	1/2	2 1/2	8.3
F14MX-36S-37-SF	**482229**	36	6.315	6.206	6.816	A1F	0.25	1.25	0.56	1/2	2 15/16	8.8
F14MX-180S-37-E	**482230**	180	31.580	31.470	- - -	A3	0.19	1.63	0.21	7/8	3 1/2	120.0
F14MX-200S-37-E	**482231**	200	35.089	34.979	- - -	A3	0.19	1.63	0.21	7/8	3 1/2	130.0
F14MX-224S-37-E	**482232**	224	39.300	39.190	- - -	A3	0.19	1.63	0.21	7/8	3 1/2	177.0

Specification

HT500 idler sprockets

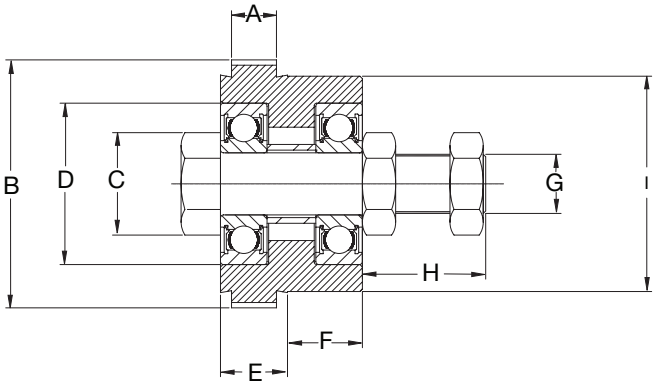

Idler number	Part number	Number of teeth	Belt width mm	A (ref) in	B in	C (ref) in	D in	E (ref) in	F in	G (threads) in	H (ref) in	I in	Approx. weight (lbs.)
8MX-32-12-IDL	**482233**	32	12	0.56	3.15	1.13	2.05	0.85	0.96	3/4-16UNF	1.58	2.73	3.8
8MX-32-21-IDL	**482234**	32	21	0.97	3.15	1.25	2.05	1.24	0.57	3/4-16UNF	1.58	2.73	3.9
8MX-36-36-IDL	**482235**	36	36	1.59	3.55	1.75	2.83	1.86	0.00	3/4-16UNF	1.77	0.00	5.1
8MX-36-62-IDL	**482236**	36	62	2.63	3.55	1.75	2.83	2.91	0.65	3/4-16UNF	1.83	0.65	9.7
14MX-30-20-IDL	**482237**	30	20	1.05	5.15	2.38	3.54	1.36	0.97	1-14NS-1B	2.38	4.35	12.5
14MX-30-37-IDL	**482238**	30	37	1.73	5.15	2.38	3.54	2.06	0.25	1-14NS-1B	2.38	4.35	13.5
14MX-34-68-IDL	**482239**	34	68	3.02	5.86	2.75	4.38	3.33	0.98	1-14NS-1B	2.38	4.89	26.0
14MX-34-90-IDL	**482240**	34	90	3.88	5.86	2.75	4.38	4.20	0.99	1-14NS-1B	2.25	4.89	32.2
14MX-34-125-IDL	**482241**	34	125	5.28	5.86	2.75	4.38	5.61	1.08	1-14NS-1B	2.38	4.89	36.4

Specification

HT500 belts

HT500 belts are for use on Taper-Lock HT500 sprockets
Belt length is in millimeters
To convert to inches, divide by 25.4

8mm pitch HT500 belts

12mm wide			21mm wide			36mm wide			62mm wide		
Description	P/N	Wt.	Description	P/N	Wt.	Description	P/N	Wt.	Description	P/N	Wt.
248-8MX-12	**142600**	0.04	248-8MX-21	**142638**	0.05	248-8MX-36	**142676**	0.09			
288-8MX-12	**142601**	0.04	288-8MX-21	**142639**	0.06	288-8MX-36	**142677**	0.11			
352-8MX-12	**142602**	0.05	352-8MX-21	**142640**	0.07	352-8MX-36	**142678**	0.13			
416-8MX-12	**142603**	0.05	416-8MX-21	**142641**	0.09	416-8MX-36	**142679**	0.15			
456-8MX-12	**142604**	0.06	456-8MX-21	**142642**	0.10	456-8MX-36	**142680**	0.17			
480-8MX-12	**142605**	0.06	480-8MX-21	**142643**	0.10	480-8MX-36	**142681**	0.18			
544-8MX-12	**142606**	0.07	544-8MX-21	**142644**	0.12	544-8MX-36	**142682**	0.20			
608-8MX-12	**142607**	0.07	608-8MX-21	**142645**	0.13	608-8MX-36	**142683**	0.22			
640-8MX-12	**142608**	0.40	640-8MX-21	**142646**	0.40	640-8MX-36	**142684**	0.70	640-8MX-62	**142714**	0.80
720-8MX-12	**142609**	0.47	720-8MX-21	**142647**	0.45	720-8MX-36	**142685**	0.75	720-8MX-62	**142715**	1.00
800-8MX-12	**142610**	0.50	800-8MX-21	**142648**	0.50	800-8MX-36	**142686**	0.80	800-8MX-62	**142716**	1.08
896-8MX-12	**142611**	0.55	896-8MX-21	**142649**	0.53	896-8MX-36	**142687**	0.90	896-8MX-62	**142717**	1.20
960-8MX-12	**142612**	0.58	960-8MX-21	**142650**	0.58	960-8MX-36	**142688**	0.97	960-8MX-62	**142718**	1.25
1000-8MX-12	**142613**	0.60	1000-8MX-21	**142651**	0.60	1000-8MX-36	**142689**	1.00	1000-8MX-62	**142719**	1.30
1040-8MX-12	**142614**	0.65	1040-8MX-21	**142652**	0.65	1040-8MX-36	**142690**	1.02	1040-8MX-62	**142720**	1.35
1120-8MX-12	**142615**	0.68	1120-8MX-21	**142653**	0.70	1120-8MX-36	**142691**	1.10	1120-8MX-62	**142721**	1.40
1200-8MX-12	**142616**	0.70	1200-8MX-21	**142654**	0.75	1200-8MX-36	**142692**	1.12	1200-8MX-62	**142722**	1.75
1224-8MX-12	**142617**	0.72	1224-8MX-21	**142655**	0.75	1224-8MX-36	**142693**	1.20	1224-8MX-62	**142723**	1.65
1280-8MX-12	**142618**	0.75	1280-8MX-21	**142656**	0.80	1280-8MX-36	**142694**	1.25	1280-8MX-62	**142724**	1.70
1440-8MX-12	**142619**	0.80	1440-8MX-21	**142657**	0.90	1440-8MX-36	**142695**	1.35	1440-8MX-62	**142725**	1.85
1600-8MX-12	**142620**	0.90	1600-8MX-21	**142658**	1.00	1600-8MX-36	**142696**	1.45	1600-8MX-62	**142726**	2.00
1760-8MX-12	**142621**	0.95	1760-8MX-21	**142659**	1.15	1760-8MX-36	**142697**	1.60	1760-8MX-62	**142727**	2.10
1792-8MX-12	**142622**	1.00	1792-8MX-21	**142660**	1.15	1792-8MX-36	**142698**	1.65	1792-8MX-62	**142728**	2.10
2000-8MX-12	**142623**	1.10	2000-8MX-21	**142661**	1.25	2000-8MX-36	**142699**	1.70	2000-8MX-62	**142729**	2.30
2200-8MX-12	**142624**	1.15	2200-8MX-21	**142662**	1.38	2200-8MX-36	**142700**	1.88	2200-8MX-62	**142730**	2.50
2240-8MX-12	**142625**	1.20	2240-8MX-21	**142663**	1.40	2240-8MX-36	**142701**	1.90	2240-8MX-62	**142731**	2.55
2400-8MX-12	**142626**	1.30	2400-8MX-21	**142664**	1.50	2400-8MX-36	**142702**	2.00	2400-8MX-62	**142732**	2.80
2520-8MX-12	**142627**	1.35	2520-8MX-21	**142665**	1.60	2520-8MX-36	**142703**	2.15	2520-8MX-62	**142733**	2.90
2600-8MX-12	**142628**	1.40	2600-8MX-21	**142666**	1.65	2600-8MX-36	**142704**	2.30	2600-8MX-62	**142734**	2.95
2800-8MX-12	**142629**	1.50	2800-8MX-21	**142667**	1.75	2800-8MX-36	**142705**	2.40	2800-8MX-62	**142735**	3.10
2840-8MX-12	**142630**	1.52	2840-8MX-21	**142668**	1.80	2840-8MX-36	**142706**	2.50	2840-8MX-62	**142736**	3.15
3048-8MX-12	**142631**	1.65	3048-8MX-21	**142669**	1.90	3048-8MX-36	**142707**	2.62	3048-8MX-62	**142737**	3.40
3200-8MX-12	**142632**	1.70	3200-8MX-21	**142670**	2.05	3200-8MX-36	**142708**	2.70	3200-8MX-62	**142738**	3.60
3280-8MX-12	**142633**	1.75	3280-8MX-21	**142671**	2.10	3280-8MX-36	**142709**	2.72	3280-8MX-62	**142739**	3.70
3600-8MX-12	**142634**	1.85	3600-8MX-21	**142672**	2.25	3600-8MX-36	**142710**	2.95	3600-8MX-62	**142740**	4.05
4000-8MX-12	**142635**	2.10	4000-8MX-21	**142673**	2.55	4000-8MX-36	**142711**	3.25	4000-8MX-62	**142741**	4.40
4400-8MX-12	**142636**	2.25	4400-8MX-21	**142674**	2.75	4400-8MX-36	**142712**	3.55	4400-8MX-62	**142742**	4.80
4480-8MX-12	**142637**	2.33	4480-8MX-21	**142675**	2.80	4480-8MX-36	**142713**	3.60	4480-8MX-62	**142743**	4.90

Specification

HT500 belts

HT500 belts are for use on Taper-Lock HT500 sprockets
Belt length is in millimeters
To convert to inches, divide by 25.4

14mm pitch HT500 belts

20mm wide			37mm wide			68mm wide			90mm wide			125mm wide		
Description	P/N	Wt.	Description	P/N	Wt.	Description	P/N	Wt.	Description	P/N	Wt.	Description	P/N	Wt.
994-14MX-20	**142744**	1.30	994-14MX-37	**142771**	1.60	994-14MX-68	**142798**	2.60	994-14MX-90	**142825**	3.00	994-14MX-125	**142852**	3.60
1120-14MX-20	**142745**	1.35	1120-14MX-37	**142772**	1.70	1190-14MX-68	**142800**	2.70	1120-14MX-90	**142826**	3.30	1120-14MX-125	**142853**	3.90
1190-14MX-20	**142746**	1.40	1190-14MX-37	**142773**	1.75	1260-14MX-68	**142801**	2.80	1190-14MX-90	**142827**	3.35	1190-14MX-125	**142854**	4.00
1260-14MX-20	**142747**	1.45	1260-14MX-37	**142774**	1.80	1400-14MX-68	**142802**	3.00	1260-14MX-90	**142828**	3.60	1260-14MX-125	**142855**	4.20
1400-14MX-20	**142748**	1.55	1400-14MX-37	**142775**	2.05	1568-14MX-68	**142803**	3.25	1400-14MX-90	**142829**	3.35	1400-14MX-125	**142856**	4.60
1568-14MX-20	**142749**	1.65	1568-14MX-37	**142776**	2.20	1610-14MX-68	**142804**	3.40	1568-14MX-90	**142830**	4.10	1568-14MX-125	**142857**	5.00
1610-14MX-20	**142750**	1.70	1610-14MX-37	**142777**	2.30	1750-14MX-68	**142805**	3.60	1610-14MX-90	**142831**	4.25	1610-14MX-125	**142858**	5.20
1750-14MX-20	**142751**	1.75	1750-14MX-37	**142778**	2.45	1890-14MX-68	**142806**	3.95	1750-14MX-90	**142832**	4.50	1750-14MX-125	**142859**	5.40
1890-14MX-20	**142752**	1.75	1890-14MX-37	**142779**	2.55	1960-14MX-68	**142807**	4.00	1890-14MX-90	**142833**	4.85	1890-14MX-125	**142860**	5.80
1960-14MX-20	**142753**	1.80	1960-14MX-37	**142780**	2.60	2100-14MX-68	**142808**	4.20	1960-14MX-90	**142834**	4.95	1960-14MX-125	**142861**	6.00
2100-14MX-20	**142754**	1.90	2100-14MX-37	**142781**	2.70	2240-14MX-68	**142809**	4.50	2100-14MX-90	**142835**	5.20	2100-14MX-125	**142862**	6.50
2240-14MX-20	**142755**	1.98	2240-14MX-37	**142782**	2.85	2310-14MX-68	**142810**	4.70	2240-14MX-90	**142836**	5.45	2240-14MX-125	**142863**	6.80
2310-14MX-20	**142756**	2.05	2310-14MX-37	**142783**	2.90	2380-14MX-68	**142811**	4.70	2310-14MX-90	**142837**	5.50	2310-14MX-125	**142864**	7.00
2380-14MX-20	**142757**	2.10	2380-14MX-37	**142784**	3.00	2450-14MX-68	**142812**	4.85	2380-14MX-90	**142838**	5.70	2380-14MX-125	**142865**	7.10
2450-14MX-20	**142758**	2.15	2450-14MX-37	**142785**	3.10	2520-14MX-68	**142813**	4.90	2450-14MX-90	**142839**	5.85	2450-14MX-125	**142866**	7.20
2520-14MX-20	**142759**	2.20	2520-14MX-37	**142786**	3.20	2590-14MX-68	**142814**	5.00	2520-14MX-90	**142840**	5.90	2520-14MX-125	**142867**	7.40
2590-14MX-20	**142760**	2.20	2590-14MX-37	**142787**	3.25	2660-14MX-68	**142815**	5.15	2590-14MX-90	**142841**	5.95	2590-14MX-125	**142868**	7.60
2660-14MX-20	**142761**	2.25	2660-14MX-37	**142788**	3.35	2800-14MX-68	**142816**	5.20	2660-14MX-90	**142842**	6.10	2660-14MX-125	**142869**	7.75
2800-14MX-20	**142762**	2.30	2800-14MX-37	**142789**	3.40	3136-14MX-68	**142817**	5.80	2800-14MX-90	**142843**	6.40	2800-14MX-125	**142870**	8.30
3136-14MX-20	**142763**	2.50	3136-14MX-37	**142790**	3.65	3304-14MX-68	**142818**	6.05	3136-14MX-90	**142844**	7.00	3136-14MX-125	**142871**	9.10
3304-14MX-20	**142764**	2.55	3304-14MX-37	**142791**	3.85	3360-14MX-68	**142819**	6.10	3304-14MX-90	**142845**	7.35	3304-14MX-125	**142872**	9.50
3360-14MX-20	**142765**	2.60	3360-14MX-37	**142792**	3.85	3500-14MX-68	**142820**	6.30	3360-14MX-90	**142846**	7.50	3360-14MX-125	**142873**	9.65
3500-14MX-20	**142766**	2.70	3500-14MX-37	**142793**	3.95	3850-14MX-68	**142821**	6.80	3500-14MX-90	**142847**	7.70	3500-14MX-125	**142874**	10.00
3850-14MX-20	**142767**	2.85	3850-14MX-37	**142794**	4.25	3920-14MX-68	**142822**	7.00	3850-14MX-90	**142848**	8.30	3850-14MX-125	**142875**	10.75
3920-14MX-20	**142768**	2.95	3920-14MX-37	**142795**	4.35	4326-14MX-68	**142823**	7.70	3920-14MX-90	**142849**	8.50	3920-14MX-125	**142876**	11.00
4326-14MX-20	**142769**	3.15	4326-14MX-37	**142796**	4.70	4410-14MX-68	**142824**	7.85	4326-14MX-90	**142850**	9.20	4326-14MX-125	**142877**	12.00
4410-14MX-20	**142770**	3.20	4410-14MX-37	**142770**	4.75	4410-14MX-68	**142824**	7.85	4410-14MX-90	**142851**	9.30	4410-14MX-125	**142878**	12.20

Selection

HT500 low-speed design load calculations

For use when designing HT500 belt drives with low speeds

Actual operating loads known

In such cases where the actual operating load is known, design the belt drive for the actual operating load rather than for a load based upon the motor name plate. Use Equation 1 to calculate the proper drive design load based upon motor load (name plate or measured) when the belt drive will be installed on the reducer output shaft.

Design load

Equation 1

Design load = (Motor load) x Service factor x (% Reducer efficiency/100)

Motor load: From user/OEM

Service factor: From Table 1

% Efficiency: From reducer manufacturer

Table 1—Service factors for low-speed drives
For drive selections with shaft speeds less than 500 rpm

DriveN machine	Typical drivers are electric motors, hydraulic motors, or internal combustion engines with hydraulic couplings/torque converters.		
Select a driven load category whose characteristics most closely represent those of the actual equipment	Intermittent service	Normal service	Continuous service
	3-5 hours daily	8-10 hours daily	16-24 hours daily
Uniform load: **Agitators and mixers:** liquid and semi-liquid **Conveyors:** light package, oven, ore, sand, salt **Food equipment:** bottling machinery, kettles, cookers, food handling machinery **Line shafts:** light or normal service **Paper industry:** agitators, bleachers, calendars, dryer machinery **Printing machinery:** cutters, rotary, embossing & flatbed presses, linotype, folders	1.0	1.2	1.3
Moderate shock Load: **Agitator mixers:** dough, heavy syrups **Brick and clay machinery:** auger, brick machines **Conveyors:** apron, bucket, pan, elevator **Cranes and hoists:** hoists, elevators **Line shafts:** moderate, heavy service **Paper industry:** yankee dryer, winder drums **Printing machinery:** magazine & newspaper printing presses **Rubber and plastics machinery:** calendars, rolls, tubers, extruders	1.3	1.4	1.5
Heavy shock loads: **Brick and clay machinery:** mixers, pug mills, rolls **Conveyors:** screw, flight **Crushing machinery:** ball mills, jaw crushers, roll crushers **Mills:** rotary, ball, pebble, rod, tube **Mixers:** concrete **Rubber and plastics machinery:** mixers, sheeters	1.5	1.6	1.7

Additional guidelines:

There are many driven machines using, or potentially designed to use, roller chain drive systems.

When converting these to HT500 drives, consider the following additional guidelines.

- Do not overlook the torque multiplying effect of belt drives and speed reducers when calculating with torque loads.
- Engineering judgment should be used in determining a design load for non-standard motors with high starting loads (NEMA C, NEMA D, direct current, etc.).
- For guidance in calculating speed reducer efficiency, refer to speed reducer efficiency on page 24.

Selection program available online at ptwizard.com and passport.baldor.com

Low-speed HT500 belt drive selection procedure

For drive selections with shaft speeds less than 500 rpm

Selection of a stock HT500 belt drive system involves these eight steps:

1. Calculate the design horsepower
2. Select the belt pitch
3. Select the sprockets and belt length
4 Select the proper belt width
5. Check and specify stock drive components
6. Installation and take-up
7. Calculate belt tensioning requirements
8. Verify speed reducer overhung load

Sample drive selection problem

A blank **Low-speed drive design information sheet** can be found on page 25. This form provides a convenient method for collecting data to properly design or convert to a HT500 belt drive.

In this example, an ore conveyor is powered by an electric motor directly connected to a speed reducer. A HT500 belt drive is needed to transmit power from the speed reducer output shaft to the conveyor shaft. The motor is a 5 horsepower, 1750 rpm normal torque AC motor.

The speed reducer is a worm gear type unit with a 50 to 1 speed ratio. The ore conveyor is to be DriveN at 17.5 ± 5% rpm and operates 24 hours per day 7 days a week. The center distance between shafts is 50.0 inches, but can be altered ± 3.0 inches, if necessary. The speed reducer output shaft has a 1.500 inch diameter and the conveyor shaft has a 2.000 inch diameter.

Step 1 Calculate the design horsepower

The design horsepower should be calculated as follows:

Design horsepower =

(Motor load) x (Low-speed service factor) x (Reducer efficiency)

Procedure

A. The motor load can be determined by several methods as explained in the **Low-speed drive load calculations** section on pages 22-24. The method used for determining motor load will depend on how much information is available on the application. A worksheet is provided on page 25 to help choose which method is most appropriate given the information known.

Example

This example demonstrates the **proportioned amperage rating** approach described in Formula 5 below.

$$\text{Horsepower} = \frac{\text{(nameplate Hp) (measured amps)}}{\text{(nameplate amps)}}$$

Motor = 5.00 Hp (nameplate rating)
Nameplate amps = 70.
Measured amps: Phase 1 = 4.1
Phase 2 = 4.4
Phase 3 = 4.2

$$\text{Average measured amps} = \frac{\text{Phase 1 + Phase 2 + Phase 3}}{3}$$

$$= \frac{\text{4.1 amps + 4.4 amps + 4.2 amps}}{3}$$

Average measured amps = 4.2 amps

$$\text{Motor load} = \frac{\text{(Nameplate Hp) (Average measured amps)}}{\text{(Nameplate amps)}}$$

$$= \frac{\text{5 Hp x4.2 amps}}{\text{7.0 amps}}$$

Motor load = 3.00 Hp procedure

B. The proper low-speed service factor is selected from **Table 1 - Service factors for low-speed roller chain drive conversions**. The selection is based on the category of machinery being driven and the number of service hours per day.

Example

An ore conveyor is found in the uniform load drive group. Reading across to the right, the column heading for 16 - 24 hours daily service shows that a **1.3 Service Factor** is recommended.

Procedure

C. The reducer efficiency is available from the speed reducer name plate or manufacturers' catalogs. Often the speed reducer efficiency is not provided directly in manufacturer's catalog. In such cases the reducer efficiency must be calculated as described on page 24.

Example – Speed reducer efficiency calculation

Speed reducer rated **input load Hp** = .65
Speed reducer rated **output torque** = lb-in. 6210
Speed reducer rated **output speed rpm** = 35

Rated output Hp

$$= \frac{\text{(Rated output torque) x (Output speed)}}{63025}$$

$$= \frac{\text{(6210lb -in) x(35 rpm)}}{63025}$$

Rated output Hp = 3.4

$$\text{Reducer Efficiency} = \frac{\text{Rated output power}}{\text{Rated input power}}$$

$$= \frac{\text{3.4 Hp}}{\text{6.5 Hp}}$$

Reducer efficiency = 0.53 or 53%

Selection program available online at ptwizard.com and passport.baldor.com

Low-speed HT500 belt drive selection procedure

For drive selections with shaft speeds less than 500 rpm

Procedure

D. The Design horsepower can now be determined by multiplying these three values together.

Example - Design horsepower calculation
Motor load = 3.00 Hp
Low-speed service factor =1.3
Reducer efficiency = 53%
Horsepower = (Motorload)(Reducer eff)
Horsepower = (3.00)(0.53) = 1.59

Design horsepower = (Hp)(Low speed service factor)

Design horsepower = (1.59)(1.3)

Design horsepower = 2.07

Step 2 Select the belt pitch

Procedure

Using the **design horsepower** and the **output speed** of the speed reducer, select the belt pitch from the **Belt pitch selection guide chart** on page 31.

Example

Design horsepower = **2.07 Hp**
Reducer output speed = **35 rpm**

Locate 35 rpm on the "RPM of faster shaft" scale on the left side of the chart and move over to where the 2.07 Design horsepower line intersects. The intersection falls within the **8 mm** pitch section, but a 14 mm pitch belt could also be used.

Step 3 Select The sprockets and belt length

Procedure

A. Determine the belt drive speed ratio: The speed ratio can be calculated by dividing the speed (rpm) of the faster shaft by the speed (rpm) of the slower shaft.

Example
Reducer output speed = 35 rpm
Ore conveyor speed = 17.5 rpm
Speed ratio = 2.00

B. Select the sprocket combination and belt length: Referring to the **Stock drive selection** tables, find the proper set of tables for the belt pitch (8mm or 14mm) found in Step 2. Looking down the speed ratio column, find the value which most closely matches the belt drive speed ratio required. Reading across the selected speed ratio line, find the stock DriveR and DriveN sprocket combination available. Reading further across, locate the belt drive center distance which most closely matches the target center distance specified. The belt sizes are listed across the top of the table for each corresponding center distance.

Multiple sprocket combinations will often be available for a given speed ratio. In such cases, selection of the proper drive combination will depend on the center distance required, minimum or maximum required sprocket diameters and speed reducer overhung load requirements. After selecting possible sprocket combinations and center distances, record the belt length (top of column) and the length factor (bottom of column).

Example

Belt pitch = 14mm
Belt drive speed ratio = 2.000
Centersss distance = 50.00 ± 3.00 in.
(from the problem statement)

Refer to the **14mm pitch stock drive selection** tables on pages 63-76. Reading down the Speed ratio column locate 2.000. In this case, there are five different drive combinations available for a 2.000 speed ratio. Checking the center distance values for each combination, the 50.10 inch value is the closest to the 50.00 inch target. So, the 28 teeth DriveR sprocket, 56 teeth DriveN sprocket, and 3136-14MX (224 teeth) belt combination is selected. Also note that the **belt length correction factor** is 1.12 with a center distance of 50.10 inches.

Step 4 Select the proper belt width procedure

Horsepower rating tables are located on pages 38-46 for standard belt pitches and stock belt widths. The base horsepower rating is given in the upper table as a function of the speed (rpm) of the faster shaft and diameter of the small sprocket. The speed of the faster shaft is located in the left hand column. Across the top are various stock sprocket sizes. The base horsepower rating of a given sprocket, at a specific speed, is the point at which the "rpm" row and the "sprocket size" column intersect.

This basic horsepower rating must be corrected for speed down speed ratios, and for the belt length selected. The following formula should be used to calculate the total drive horsepower rating:

Rated drive horsepower = [Rated base horsepower + Additional horsepower for speed ratio] x (Belt length correction factor)

Referring to the **Speed ratio add-on factor table**, select a value based upon the drive operating speed and the speed ratio. This value should be added to the basic horsepower rating. Multiply the corrected rating by the applicable **belt length correction factor** determined in Step 3B or from the **Belt length correction factor table**. The corrected horsepower rating must equal or exceed design horsepower.

Selection program available online at ptwizard.com and passport.baldor.com

Low-speed HT500 belt drive selection procedure

For drive selections with shaft speeds less than 500 rpm

Where there are several choices, space limitations may control the selection. In addition, the following guidelines should be considered:

1. Larger sprockets result in reduced belt width.
2. Larger sprockets yield longer drive service life.
3. Avoid drives where the belt width exceeds the smaller sprocket diameter.
4. Avoid drives where center distance is greater than 8 times the diameter of the smaller sprocket.

Example

Referring to the **14mm pitch horsepower rating table** for 20mm wide belts on page 42. Read down the left hand column

Calculate the corrected horsepower rating:

Rated drive horsepower =

[Rated base horsepower + Added Hp for speed ratio] x (Belt length correction factor) = [2.53 Hp+ 0.11 Hp] x (1.12)

Rated drive horsepower = 2.96 Hp

The corrected horsepower rating of 2.96 Hp exceeds the design horsepower target of 2.07 Hp. So, a **belt width of 20mm** is acceptable.

Step 5 Check and specify stock drive components procedure

A. Check the sprockets selected against any special design requirements using the dimensions provided in the Sprocket Specifications Tables on pages 6-13. Use flange diameters when checking against maximum diameter requirements.

B. Determine the bushing size required for each sprocket and check bore sizes by using the sprocket specification tables. From the stock bushing tables in the bushing section, check the bore range and keyway dimensions against the design requirements.

Example

Also from the sprocket data on page 9 we note that the 14MX-28S-20 sprocket requires a 2012 bushing and the 14MX-56S-20 sprocket requires a 3525 bushing. On page 81 in the bushing data table, a 2012 bushing has a bore range of 1/2 to 2-1/8 inches, which includes the 1-1/2 inch bore required for the DriveR shaft. The 3525 bushing has a bore range from 1-3/16 to 3-15/16 inches page 83, which includes the 2 inch bore required for the DriveN shaft.

C. Specify stock drive components using proper designations.

Example

Stock drive components are as follows:

1 ea. - 3136-14MX-20 HT500 belt
1 ea. - 14MX-28S-20 DriveR sprocket
1 ea. - 2012 bushing with a 1-1/2 in. bore
1 ea. - 14MX-56S-20 DriveN sprocket
1 ea. - 3525 bushing with a 2 in. bore

Step 6 Installation and take-up

Procedure

Because of its high resistance to elongation (stretch), there is no need to re-tension and take-up a HT500 belt drive. However, some adjustment must be provided when installing synchronous belt drives, as with nearly all power transmission systems, due to manufacturing and assembly tolerances and initial tensioning requirements. Table 11 on page 36 lists the standard installation and take-up requirements for a given belt length. Additional center distance adjustment is needed when installing the belt over flanged sprockets (see Table 11 on page 36.)

Example

As can be seen in the sprocket specifications table on page 9, both of the sprockets are flanged. Therefore, an additional allowance will be needed for installation over flanged sprockets. The total installation and tensioning allowances, are shown below.

Installation allowance = 0.16 in. + 1.97 in. = 2.13 in.
Tensioning allowance = 0.05 in.

Subtracting this from the nominal center distance value gives a minimum center distance necessary for belt installation of (50.10 inch -2.13 inch) = 47.97 inches. From the problem statement, the center distance can be reduced down to 47.0 in. if needed. So, there is sufficient center distance adjustment to easily install the belt.

Step 7 Calculate belt tensioning requirements

Procedure

A. Calculate base static tension using Formula 14 on page 35. The m value is listed in Table 10 on page 34.

Example

Belt pitch = 14mm

Belt size = 3136-14MX, 224 teeth (123.46 in. P.L.)

Belt width = 20mm

DriveR sprocket = 28 teeth (4.912 in. P.D.)

DriveR shaft speed = 35 rpm

DriveN sprocket = 56 teeth (9.825 in. P.D.)

Actual center distance = 50.10 in

Design horsepower = 2.07 Hp

Horsepower = 1.59 Hp

$$Tst = \frac{20\ DHp}{S} + mS^2, \text{ pounds}$$

Selection program available online at ptwizard.com and passport.baldor.com

Low-speed HT500 belt drive selection procedure

For drive selections with shaft speeds less than 500 rpm

where:

DHp = Design horsepower = 1.59 Hp

m = 0.92, constant for 14mm pitch, 20mm wide belt from Table 10 on page 34.

S = (Sprocket diameter) x (Shaft speed) / 3820

= (4.912 in.) x (35 rpm) / 3820

S = 0.05

$$Tst = \frac{20\ (1.59)}{0.05} + (0.92)(0.05)2$$

Tst = 636.00 + 0.002 lb.

Tst = 636.00 lb.

B. Calculate minimum and maximum deflection forces using Formulas 15 and 16 on page 35. The Y value is listed in Table 10 on page 34.

Example

a. Calculate the belt span length

$$t = \sqrt{C^2 - \left(\frac{D-d}{2}\right)^2}$$

where:

t = Span length, inches

C = Center distance = **50.10 in.**

D = diameter of larger sprocket = **9.825 in. P.D.**

d = diameter of smaller sprocket = **4.912 in. P.D.**

$$t = \sqrt{50.10^2 - \left(\frac{9.825 - 4.921}{2}\right)^2}$$

t = 50.04 in.

b. Calculate minimum and maximum belt deflection forces referring to Formulas 15 and 16 on page 35:

$$\text{Min deflection force} = \frac{1.1st + \left(\frac{t}{L}\right)Y}{1} \text{ pounds}$$

where:

T_{ST} = **636.0** pounds static tension as calculated above

t = **50.04** inches span length as calculated above

L = **123.46** inches belt length

Y = **230** (constant for Y, Table 10 on page 34)

$$\text{Min deflection force} = \frac{1.1(636.0) + \left(\frac{50.04}{123.46}\right)(230)}{16}$$

Min. deflection force = 49.5 lb.

$$\text{Max deflection force} = \frac{1.2Tst + \left(\frac{t}{L}\right)Y}{16} \text{ pounds}$$

$$\text{Max deflection force} = \frac{1.2(636.0) + \left(\frac{50.04}{123.46}\right)(230)}{16}$$

Min. deflection force = 53.5 lb.

C. Determine the deflection distance using 1/64" per inch of span length.

Note: Deflection forces must be applied evenly across the entire belt width.

Example

$$\text{Deflection distance} = \frac{t}{64}, \text{ inches}$$

$$\text{Deflection distance} = \frac{50.04}{64}$$

Deflection distance = 0.78

D. Applying the tension:

At the center of span (t), apply a force perpendicular to the belt span large enough to deflect the belt 0.78 inch from its normal free position. Be sure that the force is applied evenly across the entire belt width. Note that one sprocket should be free to rotate during the belt tensioning process.

Compare the measured deflection force with the range of minimum to maximum deflection forces calculated previously.

1. If the measured deflection force is less than the minimum recommended deflection force, the belt should be tightened.
2. If the measured deflection force is greater than the maximum recommended deflection force, the belt should be loosened.

Example

When the ore conveyer belt drive is properly tensioned, a belt span deflection of 0.78 in. should require a deflection force within the range of 49.5 to 53.5 lb.

Step 8 Verify speed reducer overhung load

Procedure

An Overhung Load calculation verifies that the belt drive system will not overload the speed reducer shaft and bearings. The Overhung Load calculation for speed reducers varies from manufacturer to manufacturer. Please refer to speed reducer catalogs or contact the speed reducer manufacturer for further assistance.

Selection program available online at ptwizard.com and passport.baldor.com

Low-speed HT500 belt drive selection procedure

Advantages of the low-speed drive design procedure

Having read through the low-speed drive design procedure and example, some may wonder if the extra steps required are really worth the effort. Absolutely! Using the low-speed drive design techniques for drives operating at speeds less than 500 rpm can result in a much smaller drive package at a lower cost. Outlined below is a comparison of the Low-speed drive design procedure with the traditional drive design procedure. The benefits of designing with a Low speed service factor, Actual horsepower load, and Speed reducer efficiency are demonstrated. Combining these techniques can result in a substantially narrower belt drive width which saves space and reduces cost.

Comparison 1 – Traditional drive design

Procedure

The traditional drive design procedure is outlined on pages 28-31 and should still be used for belt drives operating at speeds greater than 500 rpm. In the past this procedure was used to select all HT500 belt drives. The new "Low-speed drive design procedure" results in belt drive systems better sized for low speed power transmission system that typically utilize speed reducers and roller chain.

Using the traditional design procedure to select the belt drive system for the **ore conveyor** example would result in a much wider belt. The traditional design procedure does not account for a low-speed service factor, the actual operating load of the motor, or speed reducer efficiency. Rather, the belt selection is based purely on the name plate horsepower rating of the motor with a standard service factor. For the ore conveyor example, this would mean a 5 Hp name plate rating and a 1.7 service factor resulting in a Design horsepower for the belt drive of (5.00 Hp) x (1.7) = 8.50 Hp. This is over 4 times the Design horsepower of 2.07 Hp determined using the Low-speed drive design procedure. Referring to the **Horsepower rating** tables on pages 38-46, **a belt width of 68mm is required for this higher 8.50 Design horsepower load** using the **Traditional design method** compared to **a belt width of only 20mm** for the **2.07 Design horsepower load** using the **Low-speed design method.**

Comparison 2 – Benefit of Low-speed service factor

Using a Low-speed service factor can reduce the required belt width compared to a standard service factor value. The reason for this is directly related to belt drive operating speeds. Detrimental effects such as belt tensile cord fatigue and belt wear both occur during belt drive operation, but accumulate in direct proportion to the operating speed. Lower operating speeds result in less belt damage over time allowing the use of less severe service factors in the belt drive selection process. Service factors especially for belt drives operating at low speeds (500 rpm and less; includes many roller chain applications) are provided in Table 1 – **Service factors for low-speed roller chain drive conversions** on page 19.

Referring to the **ore conveyor** example, a low-speed service factor of 1.3 is recommended for this application. Substituting the reduced 1.3 low-speed service factor: Design horsepower = (5.00 Hp) x (1.3) = 6.50 Hp. Referring to the horsepower rating tables on pages 38-46, **the belt width required for 6.50 Design horsepower is 68mm.**

Comparison 3 – Benefit of designing with actual motor load

Typical belt drive selections are based upon motor nameplate horsepower ratings. However, industry surveys estimate that half of all U.S. motors operate at less than 60 percent of their rated load, and one third operate at below 50 percent of their rated load. So, sizing belt drives based on true operating loads can result in a more compact sized belt drive system.

Continuing with the **ore conveyor** example, the **Proportioned amperage rating** approach was used to calculate a Motor load of 3.00 Hp. Substituting the reduced 3.00 Hp motor load: Design horsepower = (3.00 Hp) x (1.3) = 3.90 Hp. Referring to the Horsepower rating tables on pages 38-46, **the belt width required for 3.90 Design horsepower is only 37mm compared to the 68mm belt width required in Comparison 2.**

Selection program available online at ptwizard.com and passport.baldor.com

Selection

Low-speed drive design information sheet

For drive selections with shaft speeds less than 500 rpm

Distributor: _____

Customer: _____

Drive identification (location, number, etc.): _____

DriveR information

Motor nameplate data:

Rated horsepower = _____ Rated RPM = _____ Efficiency = _____

Rted voltage = _____ Rated amps = _____ Rated torque = _____

Actual motor load = _____

Motor type: **AC** ☐ **DC** ☐ **Gear motor** ☐

Output speed: Constant ☐ Variable ☐

Reducer information:

Reducer type (worm, right angle helical, cycloidal, etc.):

Reducer efficiency = _____ Output RPM = _____ Reducer ratio = _____

Rated input Hp/Torque = _____ Rated output Hp/Toque = _____

Existing drive information:

Drive type: Chain ☐ V-belt ☐ Synchronous Belt ☐

If chain, type; 2/#60, #80, etc. Lubed ☐ Unlubed ☐

Current drive service life = _____

DriveR sprocket/ sheave = _____ (teeth/OD) _____ DriveR shaft diameter = _____

DriveN sprocket/ sheave = _____ (teeth/OD) _____ DriveR shaft diameter = _____

Center distance = _____ + _____ – _____

Type of center distance adjustment: _____

Idler used: Yes ☐ No ☐ Inside ☐ Backside ☐

DriveN information:

Type of equipment: _____ Actual horsepower required = _____

DriveN RPM = _____

Hours/day = _____ Days/week = _____ Weeks/Year = _____

Special requirements:

Space limitation:

Maximum DriveR diameter = _____ Maximum DriveN diameter = _____

Maximum DriveR width = _____ Maximum DriveN width = _____

Environmental conditions:

Temperature range = _____ Belt conductivity required ☐

Oil mist ☐ Oil splash ☐ Moisture ☐ Abrasives ☐

Drive layout

(check one)

☐ Motor reducer belt drive driven

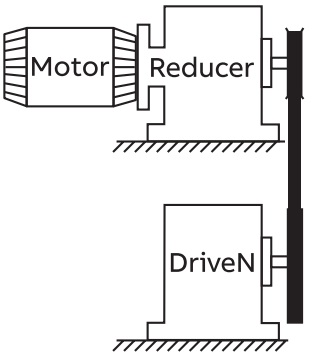

Belt drive on reducer output shaft

☐ Motor belt drive reducer driven

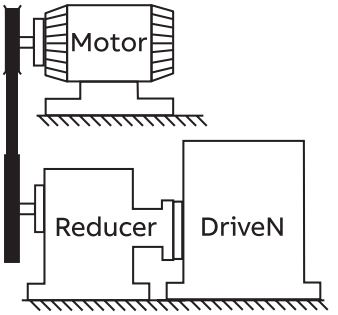

Belt drive on reducer input shaft

Selection program available online at ptwizard.com and passport.baldor.com

Selection

High-speed drive survey and energy savings worksheet

Customer information

Company: _____ Distributor: _____

Address _____ Phone: _____ Fax: _____

_____ E-mail: _____

Drive Information

I.D. of drive (location, number, etc.): _____

Description of DriveN equipment: _____

Manufacturer of DriveN equipment: _____

Horsepower rating of motor: _____ DriveN Hp load (Peak): _____ (Normal): _____

Motor frame size: _____ Motor shaft dia:._____ DriveN shaft dia.:_____

Speed:

DriveR RPM: _____ RPM measured with contact or strobe tachometer Yes ☐ No ☐

DriveN RPM: _____ RPM measured with contact or strobe tachometer Yes ☐ No ☐

Speed ratio: _____ Speed up: _____ or speed down: _____

Center distance minimum: _____ Normal: _____ Maximum: _____

Existing drive components: DriveR _____ DriveN: _____

Belts: _____ Belt manufacturer: _____

Ambient Conditions:

Temperature: _____ Moisture: _____ Oil, etc.: _____

Abrasives: _____ Shock load: _____

Static conductivity required? Yes ☐ No ☐

Maximum sprocket diameter (OD) and width limitations (for guard clearance):

DriveR: Max OD: _____ Max. width: _____ DriveN: Max OD: _____ Max. width: _____

Guard description: _____

Motor mount:

Double screw base? Yes ☐ No ☐ Motor mounted on sheet metal? Yes ☐ No ☐

Adequate structure? Yes ☐ No ☐ Floating/pivot motor base? Yes ☐ No ☐

Start up load:

% Motor rating at start up: _____ AC inverter? Yes ☐ No ☐ Soft start? Yes ☐ No ☐

Duty cycle:

Number of starts/stops: _____ times per _____ (hour, day, week, etc.)

Energy savings information

Energy cost per kW hour: _____

Hours of operation: _____ Hours per day _____ Days per week _____ Weeks per year

Selection program available online at ptwizard.com and passport.baldor.com

Selection

HT500 design data worksheet

Customer Information

Company: _____ Distributor: _____

Address: _____ Phone: _____ Fax: _____

_____ E-mail _____

Application Summary

General description: _____

Product type: _____ Production volume: _____

Design Parameters

DriveR:

Motor type & description: _____ (Servo, stepper, DC, AC, etc.) Reversing _____

Nominal motor torque/power output: _____ RPM: _____

Max/peak motor torque/power output: _____ RPM: _____

Motor stall torque (If applicable): _____ Driver rotation: _____ (CW / CCW / Rev)

DriveN's/idlers: (Specify appropriate units for each field; in, mm / Hp, kw / lb-ft, lb-in, N-m, etc.)

Description	X	Y	Pulley diameter	Pitch		Sprocket teeth	Inside/ outside	RPM	Load (DriveN)	Units	Conditions		Shafts diameter
											#	% Time	
DriveR													

Note: For complex drive layouts use additional pages as needed

Drive sketch

Idler details

Slot movement	Min position		Max position	
Spring	X	Y	X	Y

Pivoting movement	Pivot point		Movement angle	
Spring	X	Y	Min deg	Max deg
Pivot arm radius:				
	(in/mm)			

Special Requirements

Product design Life: _____ Belt life: _____ Hours/day: _____ Hours/year: _____

Pulley materials:

Prototype: _____ Production: _____

Ambient conditions:

Temperature: _____ Moisture: _____ Oil: _____ Static dissipation: _____ Abrasives: _____

Special requirements:

Note: This worksheet may be used to survey multipoint drives.
For more information on specifying shaft locations in multipoint drive layouts, see Engineering and Technical page 104.

Page _____ of _____

Selection program available online at ptwizard.com and passport.baldor.com

HT500 drive selection procedure (Continued)

1. Calculate the design horsepower
2. Select the belt pitch
3. Select the sprockets and belt length
4. Select the proper belt width
5. Check and specify stock drive component
6. Installation and take-up
7. Calculate belt tensioning requirements

Sample Drive Selection Problem

A gear pump is to be driven by a 30 Hp normal torque electric motor with an output speed of 1160 rpm. The gear pump is to be driven at 580 rpm ±5%. The center distance is to be approximately 30 inches, but can be altered ±3 inches, if necessary. The motor shaft has a 2-1/8 inch O.D. and the pump shaft has a 3 inch O.D. The pump will operate 16 hours a day, five days a week. The pump sprocket is limited to a maximum of 18 inches O.D. There are no unusual drive conditions. Design using HT500.

Step 1 Calculate the design horsepower

Procedure

To calculate the design horsepower, first determine the relative severity, then select a service factor for the drive. Average hours per day of service also should be considered. Locate the power source and the DriveN unit in the service factor table on page 33. The design Hp then is determined by multiplying the rated Hp (usually the nameplate rating) by the service factor determined above.

Example

Using the service factor table, the DriveR can be found in the first group. Since the pump will run 16 hours per day, follow the continuous service column down to the DriveN machines group for gear pumps.

The recommended service factor is 1.7.

Design horsepower = (Motor load) x (Service factor)
= (30) x (1.7)
Design horsepower = 51 Hp

Step 2 Select the belt pitch

Procedure

Using the design Hp and the rpm of the smaller sprocket, select the belt pitch from the Belt pitch selection guide on page 31.

Example

Design horsepower = 51 Hp
Motor speed = 1160 rpm

Locate 1160 rpm on the "RPM of faster shaft" scale on the left side of the chart and move over to where the 51 Design horsepower line intersects. The intersection falls within the 8mm pitch range, but near the 14mm pitch area. Both 8mm and 14mm pitch drives should be considered.

Step 3 Select The Sprockets and Belt Length

Procedure

A. **Determine the speed ratio:** The speed ratio can be calculated by dividing the rpm of the faster shaft by the rpm of the slower shaft.

Example

Motor speed = 1160 rpm

Gear pump speed = 580 rpm

$$\text{Speed ratio} = \frac{\text{rpm of faster shaft}}{\text{rpm of slower shaft}} = \frac{1160}{580} = 2.00$$

B. **Select the sprocket combination and belt length:** Referring to the **Stock drive selection** tables on pages 47-76, find the proper set of tables for the belt pitch (8mm or 14mm) found in Step 2. Looking down the speed ratio column, find the value which most closely matches the belt drive speed ratio required. Reading across the selected speed ratio line, find the stock DriveR and DriveN sprocket combination available. Reading further across, locate the belt drive center distance which most closely matches the target center distance specified. The belt sizes are listed across the top of the table for each corresponding center distance.

Multiple sprocket combinations will often be available for a given speed ratio. In such cases, selection of the proper drive combination will depend on the center distance required, minimum or maximum required sprocket diameters and the recommended minimum sprocket diameter for electric motors (see Table 4 on page 32).

After selecting possible sprocket combinations and center distances, record the belt length (top of column) and the length factor (bottom of column).

Example

Belt pitch = 8mm and 14mm
Belt drive speed ratio = 2.00
Center distance = 30.00 ± 3.00 in.

First, refer to the **8mm pitch stock drive selection** tables on pages 47-76. Reading down the Speed ratio column locate 2.00 on page 57. There are six various sprocket combinations within the allowable center distance range. Of these, two are closest to the desired 30 inches. These are 25 to 50 teeth, and 40 to 80 teeth sprocket combinations. The minimum sprocket diameter of 6.1 inches for a 30 Hp motor at 1160 rpm (See Table 4 on page 32) eliminates the 25 to 50 and 40 to 80 teeth sprocket combinations. Therefore, an 8mm pitch drive will not be utilized for this drive system.

Now refer to the 14mm pitch stock drive selection tables on pages 63-76. Reading down the Speed ratio column locate 2.00 on page 71. Several combinations are shown which will meet the 30 ± 3 inch center distance requirement. The maximum O.D. limit of 18 inches on the DriveN sprocket

Selection program available online at ptwizard.com and passport.baldor.com

HT500 drive selection procedure (Continued)

eliminates the 56 to 112 teeth combination. The preference for a center distance close to 30 inches would favor the 40 to 80 and 28 to 56 teeth combinations. However, the 4.912 inch pitch diameter of the 28 teeth sprocket is less than the recommended minimum diameter of 6.1 inches for the electric motor. So the 40 teeth DriveR sprocket, 80 teeth DriveN sprocket, and 2380-14MX (170 teeth) belt combination is selected. Also note that the belt length correction factor is 1.01 with a center distance of 30.11 inches.

C. **Check the belt speed.** Do not exceed 6500 fpm (feet per minute) with stock sprockets. **Belt speed** can be calculated using the following formula:

$$V\ (\text{fpm}) = PD\ (\text{inches}) \times \frac{\text{Speed (rpm)}}{3.82}$$

Example

14mm pitch drive with 40 groove DriveR:

$$V = \frac{7.018 \times 1160}{3.82} = 2131.1\ \text{fpm}$$

Calculating the belt speed for the drive system being considered shows that the belt speed does not exceed 6500 fpm and can be considered further.

Step 4 Select the proper belt width

Procedure

Horsepower rating tables are located on pages 38-46 for standard belt pitches and stock belt widths. The base horsepower rating is given in the upper table as a function of the speed (rpm) of the faster shaft and diameter of the small sprocket. The speed of the faster shaft is located in the left hand column. Across the top are various stock sprocket sizes. The base horsepower rating of a given sprocket, at a specific speed, is the point at which the "rpm" row and the "sprocket size" column intersect.

This base horsepower rating must be corrected for speed down speed ratios, and for the belt length selected. The following formula should be used to calculate the total drive horsepower rating:

Rated drive horsepower = [Rated base horsepower
+ Additional horsepower for speed ratio]
x (Belt length correction factor)

Referring to the **Additional horsepower for speed ratio factor** Table, select a value based upon the drive operating speed and the speed ratio. This value should be added to the base horsepower rating. **Multiply the corrected rating by the applicable Belt length correction factor** determined in Step 3B or from the Belt length correction factor table. **The Drive horsepower rating must equal or exceed Design horsepower.**

Where there are several choices, space limitations may control the selection. In addition, the following guidelines should be considered:

1. Larger sprockets result in reduced belt width.
2. Larger sprockets yield longer drive service life.
3. Avoid drives where the belt width exceeds the smaller sprocket diameter.
4. Avoid drives where center distance is greater than 8 times the diameter of the smaller sprocket.

Example

Refer to the **14mm Pitch horsepower rating** table for 20mm wide belts on page 42. Read down the left hand column for "RPM of faster shaft" and locate 1160 rpm. Read the sprocket sizes listed across the top of the table and locate the 40 teeth, 5.614 inch P.D. column. Read across the "RPM" row and down the sprocket size column until the two intersect at a **Rated base horsepower** of 60.0 Hp.

Next, referencing the **Additional horsepower for speed ratio factor** table, find the listing for a 2.00 speed ratio. An add-on factor of 3.53 Hp is listed. Then, referencing the **Belt length correction factor** table, find the listing for a 2380-14MX belt. A correction factor of 1.01 is listed.

Calculate the **Corrected horsepower rating:**
Rated drive horsepower =
[Rated base horsepower + Added Hp for Speed ratio] x (Belt length correction factor) = [60.0 Hp + 3.53 Hp] x (1.01)

Rated drive horsepower = 64.17 Hp

The Drive horsepower rating of 64.17 Hp exceeds the Design horsepower target of 51 Hp. So, a belt width of 20mm is acceptable.

Step 5 Check and Specify Stock Drive Components

Procedure

A. **Check the sprockets selected** in Steps 3 and 4 against the design requirements using the dimensions provided in the Sprocket Specification Tables on pages 6-13. Use flange diameters when checking against maximum diameter requirements.

Example

From the table on page 9, we find the 14MX-80S-20 DriveN Sprocket has an overall flange diameter of 14.620 inches, which is less than the 18 inch maximum diameter specified.

B. **Determine the bushing size** required for each sprocket and check bore sizes by using the sprocket specification tables. From the stock bushing tables on page 80-85, check the bore range and keyway dimensions against the design requirements.

Selection program available online at ptwizard.com and passport.baldor.com

HT500 drive selection procedure (Continued)

Example

Also from the sprocket data on page 9 we note that the 14MX-40S-20 sprocket requires a 2517 bushing and the 14MX-80S-20 sprocket requires a 3525 bushing. In the bushing table on page 81-83, a 2517 bushing has a bore range of 1/2 to 2-11/16 inches, which includes the 2-1/8 inch bore required for the DriveR shaft. The 3525 bushing has a bore range from 1-3/16 to 3-15/16 inches, which includes the 3 inch bore required for the DriveN shaft.

C. Specify stock drive components using proper designations.

Example

Stock drive components are as follows:
1 ea. 2380-14MX-20 HT500 belt
1 ea. 14MX-40S-20 DriveR sprocket
1 ea. 2517 bushing with a 2-1/8 in. bore
1 ea. 14MX-80S-20 DriveN sprocket
1 ea. 3525 bushing with a 3 in. bore

Step 6 Installation and Takeup

Procedure

Because of its high resistance to elongation (stretch), there is no need to re-tension and take up an HT500 belt drive. However, some adjustment must be provided when installing synchronous belt drives, as with nearly all power transmission systems, to account for manufacturing and assembly tolerances and initial tensioning requirements. Table 11 on page 36 lists the standard installation and take-up requirements for a given belt length. Additional center distance adjustment is needed when installing the belt over flanged sprockets (see Table 11 on page 36.)

Example

As can be seen in the sprocket specifications table on page 9, both of the sprockets are flanged. Therefore, an additional allowance will be needed for installation over flanged sprockets. The total installation and tensioning allowances, are shown below.

Installation allowance = 0.13 in. + 1.97 in. = 2.10 in

Tensioning allowance = 0.04 in.

Subtracting this from the nominal center distance value gives a minimum center distance necessary for belt installation of (30.11 inch - 2.10 inch) = 28.10 inches. From the problem statement, the center distance can be reduced down to 27.0 in. if necessary. So, there is sufficient center distance adjustment to easily install the belt.

Step 7 Calculate Belt Tensioning Requirements

Procedure

A. Calculate base static tension using appropriate Formula 14 on page 34. The m value is listed in Table 10 on page 34.

Example

Belt pitch = 14mm
Belt size = 2380-14MX, 170 teeth (93.70 in. P.L.)
Belt width = 20mm
DriveR sprocket = 40 teeth (7.018 in. P.D.)
DriveR shaft speed = 1160 rpm
DriveN sprocket = 80 teeth (14.036 in. P.D.)
Actual center distance = 30.11 in.
Design horsepower = 51 Hp

$$TST = \frac{20\ Hp}{S} + mS2, \text{ pounds}$$

Where:

Hp = Horsepower = 30 Hp
m = 0.92, constant for 14mm pitch, 20mm wide belt from Table 10 on page 34
S = (Sprocket diameter) x (Shaft speed) / 3822.76
= (7.018 in.) x (1160 rpm) / 3822.76
S = 2.13

$$TST = \frac{20\ (30)}{213} + (0.92)(2.13)2$$

TST = 281.69 + 4.17 lb.

TST = 285.86 lb.

B. Calculate minimum and maximum deflection forces using Formulas 15 and 16 on page 35. The Y value is listed in Table 10.

Example

a. Calculate the belt span length

$$t = \sqrt{C^2 - \left(\frac{D-d}{2}\right)^2}$$

where:

t = Span length, inches

C = Center distance = 30.11 in.

D = Diameter of larger sprocket = 14.036 in. P.D.

d = Diameter of smaller sprocket = 7.018 in. P.D.

$$t = \sqrt{30.11^2 - \left(\frac{14.036 - 7.0181}{2}\right)^2}$$

b. Calculate minimum and maximum belt deflection forces referring to Formulas 15 and 16 on page 35:

$$\text{Min Deflection Force} = \frac{1.1st + \left(\frac{t}{L}\right)Y}{16} \text{ pounds}$$

where:
TST = 285.86 pounds static tension as calculated before
t = 29.90 inches span length as calculated before
L = 93.70 inches belt length
Y = 230 (constant for Table 10 on page 34)

$$\text{Min deflection force} = \frac{1.1(285.86) + \left(\frac{29.90}{93.70}\right)(230)}{16}$$

Min. deflection force = 24.24 lb.

Selection program available online at ptwizard.com and passport.baldor.com

HT500 drive selection procedure (Continued)

$$\text{Max Deflection Force} = \frac{1.2Tst + \left(\frac{t}{L}\right)Y \text{ pounds}}{16}$$

$$\text{Max Deflection Force} = \frac{1.2(685.86) + \left(\frac{29.90}{93.70}\right)(230)}{16}$$

Max. Deflection Force = 26.03 lb.

C. Determine the deflection distance using 1/64" per inch of span length.

Note: Deflection forces must be applied evenly across the entire belt width.

Example

$$\text{Deflection Distance} = \frac{t}{64}\text{, inches}$$

$$\text{Deflection Distance} = \frac{29.9}{64}$$

D. Applying The Tension:

At the center of span (t), apply a measured force perpendicular to the belt span large enough to deflect the belt 0.47 inch from its normal free position. Be sure that the force is applied evenly across the entire belt width. Note that one sprocket should be free to rotate during the belt tensioning process.

Compare the measured deflection force with the range of minimum to maximum deflection forces calculated before.

1. **If the measured deflection force is less than the minimum recommended deflection force, the belt should be tightened.**
2. **If the measured deflection force is greater than the maximum recommended deflection force, the belt should be loosened.**

Example

When the gear pump belt drive is properly tensioned, a belt span deflection of 0.47 in. should require a deflection force within the range of 22.34 to 24.12 lb.

Belt Pitch Selection Guide

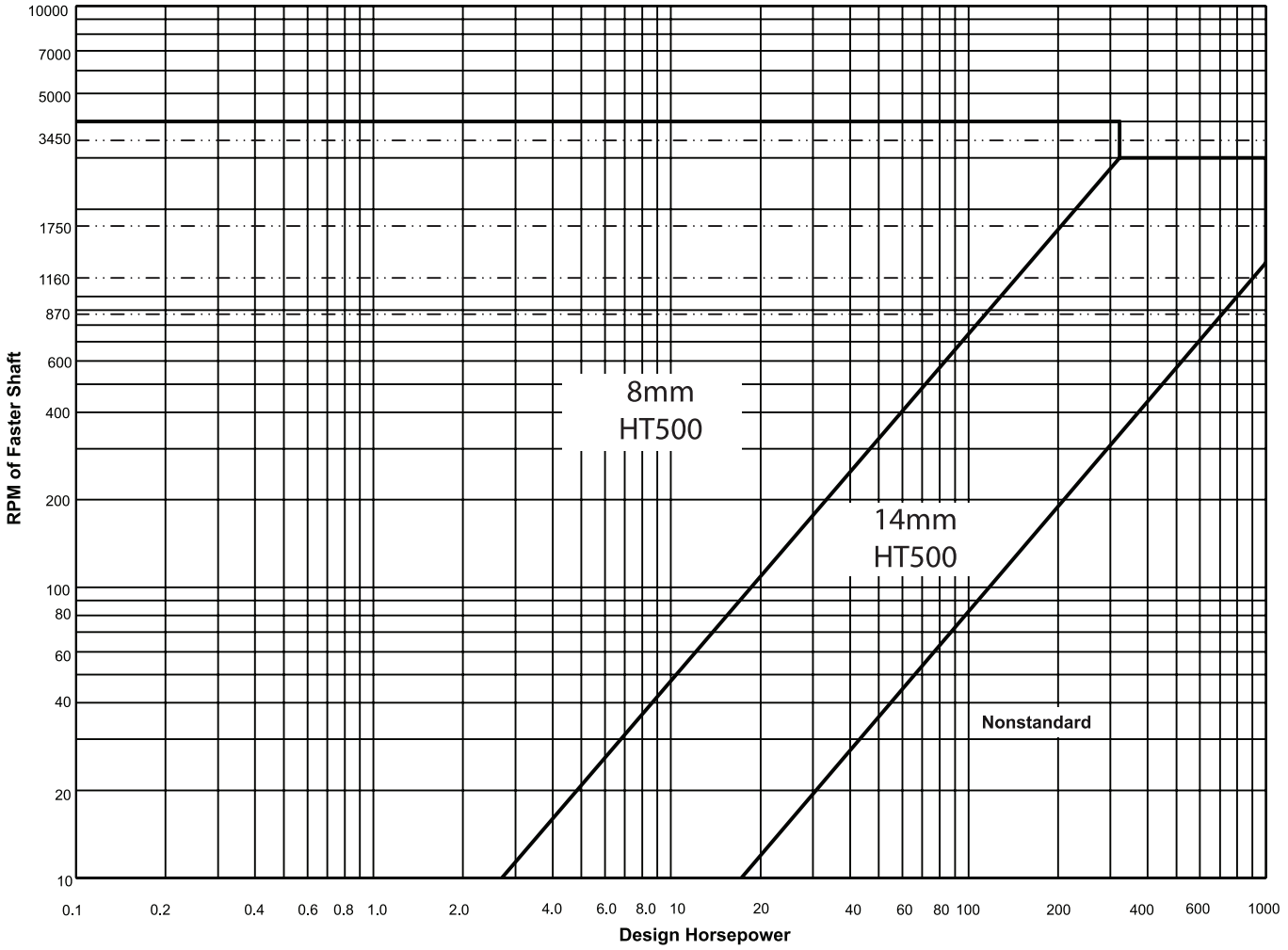

Selection program available online at ptwizard.com and passport.baldor.com

Table 4

Minimum recommended sprocket pitch diameters for general purpose electric motors

Synchronous belt drives

For a given motor horsepower and speed, the total belt pull is related to the motor sprocket size. As this size decreases, the total belt pull increases. Therefore, to limit the resultant load on motor shaft and bearings, NEMA lists minimum sprocket sizes for the various motors. The sprocket on the motor (DriveR sheave) should be at least as large as the diameter specified in Table No. 4.

	Motor RPM (60 cycle and 50 cycle electric motors)						
Motor horsepower	**575 485***	**690 575***	**870 725***	**1160 950***	**1750 1425***	**3450 2850***	**Motor horsepower**
1/2	—	—	2.0	—	—	—	1/2
3/4	—	—	2.2	2.0	—	—	3/4
1	2.7	2.3	2.2	2.2	2.0	—	1
1-1/2	2.7	2.7	2.2	2.2	2.2	2.0	1-1/2
2	3.4	2.7	2.7	2.2	2.2	2.2	2
3	4.1	3.4	2.7	2.7	2.2	2.2	3
5	4.1	4.1	3.4	2.7	2.7	2.2	5
7-1/2	4.7	4.1	4.0	3.4	2.7	2.7	7-1/2
10	5.4	4.7	4.0	4.0	3.4	2.7	10
15	6.1	5.4	4.7	4.0	4.0	4.0	15
20	7.4	6.1	5.4	4.7	4.0	2.2	20
25	8.1	7.4	6.1	5.4	4.0	4.0	25
30	9.0	8.1	6.1	6.1	4.7	—	30
40	9.0	9.0	7.4	6.1	5.4	—	40
50	9.9	9.0	7.6	7.4	6.1	—	50
60	10.8	9.9	9.0	7.2	6.7	—	60
75	12.6	11.7	8.6	9.0	7.7	—	75
100	16.2	13.5	10.8	9.0	7.7	—	100
125	18.0	16.2	13.5	10.8	9.5#	—	125
150	19.8	18.0	16.2	11.7	9.5	—	150
200	19.8	19.8	19.8	—	11.9	—	200
250	19.8	19.8	—	—	—	—	250
300	24.3	24.3	—	—	—	—	300

* These RPM's are for 50 cycle electric motors.
# Use 8.6 for Frame Number 444 T only.

Data in the white area of Table No. 4 are from NEMA Standard MG-1-14-42, June, 1972. Data in the light gray area are from MG-1-14-43, January, 1968. The darker gray area is a composite of electric motor manufacturers data. They are generally conservative, and specific motors and bearings may permit the use of a smaller motor sprocket. Consult the motor manufacturer.

Selection program available online at ptwizard.com and passport.baldor.com

Selection

DriveN Machine	DriveR					
The DriveN machines listed below are representative samples only. Select a DriveN machine whose load characteristics most closely approximate those of the machine being considered.	AC Motors: Normal torque, squirrel cage, synchronous, split phase, inverter controlled DC Motors: Shunt wound, stepper motors Engines: Multiple cylinder internal combustion.			AC motors: High torque, high slip, repulsion-induction, single phase, series, wound, slip ring. DC motors: Series wound, compound, wound, servo motors. Engines: Single cylinder internal, combustion. Line shafts clutches		
	Intermittent service	**Normal service**	**Continuous service**	**Intermittent service**	**Normal service**	**Continuous service**
	Up to 8 hours daily or seasonal	**8-16 hours daily**	**16-24 hours daily**	**Up to 8 hours daily or seasonal**	**8-16 hours daily**	**16-24 hours daily**
Display, dispensing equipment Instrumentation Measuring equipment Medical equipment Office, projection equipment	1.0	1.2	1.4	1.2	1.4	1.6
Appliances, sweepers, sewing machines Screens, oven screens, drum, conical Woodworking equipment: (Light) Band saws, drills, lathes	1.1	1.3	1.5	1.3	1.5	1.7
Agitators for liquids Conveyors: Belt, light package Drill press, lathes, saws Laundry machinery Woodworking equipment: (Heavy) Circular saws, joiners, planers	1.2	1.4	1.6	1.6	1.8	2.0
Agitators: Semi-liquid Compressors: Centrifugal Conveyor belt: Coal, ore, sand Dough mixers Line shafts Machine tools: Grinder, shaper Boring mill, milling machines Paper machinery (except pulpers) Presses, punches, shears Printing machinery Pumps: Centrifugal, gear Screens: Revolving, vibratory	1.3	1.5	1.7	1.6	1.8	2.0
Brick machinery (except pug mills) Conveyor: Apron, pan, bucket, elevator Extractors, washers Fans, centrifugal blowers Generators and exciters Hoists Rubber calendar, mills, extruders	1.4	1.6	1.8	1.8	2.0	2.2
Centrifuges Screw conveyors Hammer mills Paper pulpers Textile machinery	1.5	1.7	1.9	1.9	2.1	2.3
Blowers: Positive displacement Mine fans Pulverizers	1.6	1.8	2.0	2.0	2.2	2.4
Compressors, reciprocating Crushers: Gyratory, jaw, roll Mills: Ball, rod, pebble, etc. Pumps, reciprocating Saw mill equipment	1.7	1.9	2.1	2.1	2.3	2.5

Selection program available online at ptwizard.com and passport.baldor.com

These tolerances are for reference only. For fixed center drive applications and special tolerances, contact Dodge® power transmission product application.

Stock belt center distance tolerences

Belt length (mm) (In)	Center distance tolerance (mm) (In)
over 127 **5** to 254 **10**	± 0.20 **.008**
over 254 **10** to 381 **15**	± 0.23 **.009**
over 381 **15** to 508 **20**	± 0.25 **.010**
over 508 **20** to 762 **30**	± 0.30 **.012**
over 762 **30** to 1016 **40**	± 0.33 **.013**
over 1016 **40** to 1270 **50**	± 0.38 **.015**
over 1270 **50** to 1524 **60**	± 0.41 **.016**
over 1524 **60** to 1778 **70**	± 0.43 **.017**
over 1778 **70** to 2032 **80**	± 0.46 **.018**
over 2032 **80** to 2286 **90**	± 0.49 **.019**
over 2286 **90** to 2540 **100**	± 0.52 **.020**
over 2540 **100** to 2794 **110**	± 0.54 **.021**
over 2794 **110** to 3048 **120**	± 0.56 **.022**
over 3048 **120** to 3302 **130**	± 0.58 **.023**
over 3302 **130** to 3556 **140**	± 0.60 **.024**
over 3556 **140** to 3810 **150**	± 0.63 **.025**
over 3810 **150** to 4064 **160**	± 0.66 **.026**
over 4064 **160** to 4318 **170**	± 0.69 **.027**
over 4318 **170** to 4572 **180**	± 0.72 **.028**
over 4572 **180**	add ± .03 **.001** for every .254 **10** increment

Standard belt tensioning procedure

When installing a belt:

A. Be sure it is tensioned adequately to prevent tooth jumping (ratcheting) under the most severe load conditons which the drive will encounter during operation.

B. Avoid extremely high tension which can reduce belt life and possibly damage bearings, shafts and other drive cornponents.

The proper way to check belt tension is to use a tension tester. Baldor has a variety of tension testers, ranging from the simple spring scale type tester to the sophisticated Sonic Tension Meter. The spring scale type tester is used by measuring how much force is requirec to deflect the belt at the center of his span by a specified distance (force deflection method), as shown in the sketch below.

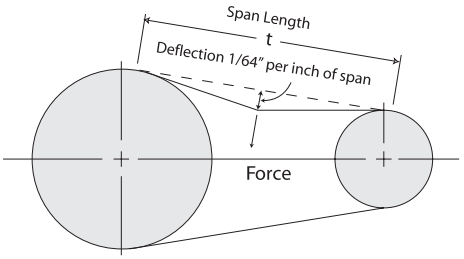

The Sonic Tension Meter measures the vibration of the belt span and instantly converts the vibration frequency into belt static tension (span vibration method).

When you wish to use a numerical method for calculating recommended belt installation tension values, the following procedure may be used.

Step 1: Calculate the required base static installation tension.

Use Formula 14 to calculate the required base static installation tension.

Formula 14

$$T_{SI} = \frac{20Hp}{S} + mS^2$$

Where T_{SI} = base static installation tension. pounds

Hp = Horsepower

$S = \frac{PD \times RPM}{3820}$

m = Value from table 10

PD = Sprocket Pitch Diameter, inches

RPM = Revolutions per minute of same sprocket

Table 10

Pitch	Belt width	m	Y	minimum T_{si} (lb) per span
8mm	12mm	0.33	65	28
	21mm	0.57	113	49
	36mm	0.97	194	84
	62mm	1.68	335	145
14mm	20mm	0.92	230	119
	37mm	1.69	426	220
	68mm	3.11	782	405
	90mm	4.12	1035	536
	125mm	5.72	1438	744

Selection program available online at ptwizard.com and passport.baldor.com

Selection

Because of the high performance capabilities of HT500 belts, it is possible to design drives that have significantly greater load than are necessary to carry the actual design load. Consequently. Formula 14 can provide T_{st} values less than are necessary for the belt to operate properly, resulting in poor belt performance and reduced service life. If a more appropriately sized drive cannot be designed, minimum recommended T_{st} values are provided in Table 10 to assure that the belts function properly when lightly loaded.

Always use the greater T_{st} value; i.e., from T_{st} Formula 14 or Table 10.

Note: When applying static belt tension values directly, multiply the required base static installation tension (T_{st}) calculated in Formula 14 by the following factors:

For new belts:

Minimum static tension = Base static tension X 1.1
Maximum static tension = Base static tension X 1.2

For used belts:

Minimum static tension = Base static tension X 0.8
Maximum static tension = Base static tension X 0.9

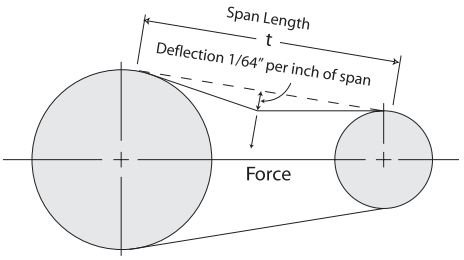

Step 2: Calculate the minimum and maximum recommended deflection forces.

A. Measure the span length of your drive (see sketch).

B. New belt minimum recommended force:

Formula 15

$$\text{Min deflection force} = \frac{1.1st + \left(\frac{t}{L}\right)Y}{16}, \text{ pounds}$$

Formula 16

$$\text{Max deflection force} = \frac{1.2Tst + \left(\frac{t}{L}\right)Y}{16}, \text{ pounds}$$

Where:

T_{st} = Base static tension, lbf
t = span length, inches
L = belt pitch length, inches
Y = constant from Table 10

Used belt note: For re-installation of a used belt, a recommended tension of 0.8 T_{st} to 0.9 T_{st} value should be used in calculating the deflection forces, instead of the 1.1 T_{st} to 1.2 T_{st} shown for new belts.

Step 3: Applying the tension

Force deflectlon tension method

A. At the center of the span (t) apply a force perpendicular to the span large enough to deflect the belt on the drive 1/64 inch per inch of span length from its normal position. One sprocket should be free to rotate. Be sure the force is applied evenly across the entire belt width. If the belt is a wide synchronous belt, place a piece of steel or angle iron across the belt width and deflect the entire width of the belt evenly.

B. Compare this deflection force with the range of forces calculated in Step 2.

1. If it is less than the minimum recommended deflection force, the belt should be tightened.
2. If it is greater than the maximum recommended deflection force, the belt should be loosened.

Span vibration tension method

The Sonic Tension Meter detects the vibration frequency in the belt span, and converts that measurement into the actual static tension in the belt.

To use the Sonic Tension Meter, begin by entering the belt unit weight, belt width, and the span length. To measure the span vibration, press the "'Measure" button on the meter, tap the belt span, and hold the microphone approximately 1/4" away from the back of the belt. The Sonic Tension Meter will display the static tension, and can also display the span vibration frequency.

The belt unit weights for use with the Sonic Tension Meter are shown in the following table.

Belt product family	Belt cross section	Adjusted belt weight (grams/meter)
HT500 belt	8mm	4.7
	14mm	7.9

Rim speed limits per MPTA standard

Product material	Maximum allowable rim speed in FPM	
	Web / arm style	Block style
Class 30 gray iron	6500	7500
Ductile iron 65	8000	10000
Ductile iron 80	10000	13000
Steel (1018)	9000	11000

[FPM = .626 x Dia. (inches) x RPM]

Note: Above rim speed values are maximum for normal considerations. In some cases these values may be exceeded. Consult factory and include complete details of proposed application.

Dynamic balance RPM = for sheave/sprocket ◊

$$\frac{15600}{\sqrt{\text{Dia x Face Width}}}$$

Note: ◊ MPTA recommends dynamic balance when application RPM exceeds this value

Selection program available online at ptwizard.com and passport.baldor.com

Center Distance Allowances for Installation and Tensioning

Since fixed center drives are not recommended, center distance allowances for a HT500 belt drive are necessary to assure that the belt can be installed without damage and then tensioned correctly. The standard installation allowance is the minimum decrease in center distance required to install a belt when flanged sprockets are removed from their shafts for belt installation. This is shown in the first column of Table 11. This table also lists the minimum increase in center distance required to assure that the belt can be properly tensioned overs its normal life time. If a belt is to be installed over flanged sprockets without removing them, the additional center distance allowance for installation shown in the second table below must be added to the first table data.

Table 11

Center distance allowance for installation and tensioning

Belt length (mm) **(In)**	Standard installation allowance (flanged sprocket removed for installation) (mm) **(In)**	Tension allowance (mm) **(In)**
up to 125 **5**	0.5 **0.02**	0.5 **0.02**
over 125 **5** to 250 **10**	0.8 **0.03**	0.8 **0.03**
over 250 **10** to 500 **20**	1.0 **0.04**	0.8 **0.03**
over 500 **20** to 1000 **40**	1.8 **0.07**	0.8 **0.03**
over 1000 **40** to 1780 **70**	2.8 **0.10**	0.8 **0.04**
over 1780 **70** to 2540 **100**	3.3 **0.13**	1.0 **0.04**
over 2540 **100** to 3300 **130**	4.1 **0.16**	1.3 **0.05**
over 3300 **130** to 4600 **180**	4.8 **0.19**	1.3 **0.05**
over 4600 **60** to 6900 **70**	5.6 **0.22**	1.3 **0.05**

Addtional Center Distance Allowance For Installation Over Flanged Sprockets*

(Add to installation allowance in table No 11)

Pitch	One sprocket flanged (mm) **(In)**	Both sprockets flanged (mm) **(In)**
8mm	21.8 **0.86**	33.3 **1.31**
14mm	31.2 **1.23**	50.0 **1.97**

*For drives that require installation of the belt over one sprocket at a time, use the value for "Both Sprockets Flanged"

Drive alignment

Provision should be made for center distance adjustment, according to the two tables on this page, or to change the idler position so the belt can be slipped easily onto the drive. When installing a belt, never force it over the flange. This will cause internal damage to the belt tensile member.

Synchronous belts typically are made with high modulus tensile members which provide length stability over the belt life. Consequently, misalignment does not allow equal load distribution across the entire belt top width. In a misaligned drive, the load is being carried by only a small portion of the belt top width, resulting in uneven belt wear and premature tensile failure.

There are two types of misalignment: parallel and angular (see Fig. 7). Parallel misalignment is where the DriveR and DriveN shafts are parallel, but the two sprockets lie in different planes. When the two shafts are not parallel, the drive is angularly misaligned.

A fleeting angle is the angle at which the belt enters and exits the sprocket, and equals the sum of the parallel and angular misalignments.

Any degree of sprocket misalignment will result in some reduction of belt life, which is not accounted for in the normal drive design procedure. Misalignment of all synchronous belt drives should not exceed 1/4" or 1/16" per foot of linear distance. Misalignment should be checked with a good straight edge or by using a laser alignment tool. The straight edge tool should be applied from DriveR to DriveN, and then from DriveN to DriveR so that the total effect of parallel and angular misalignment is made visible.

Figure 7

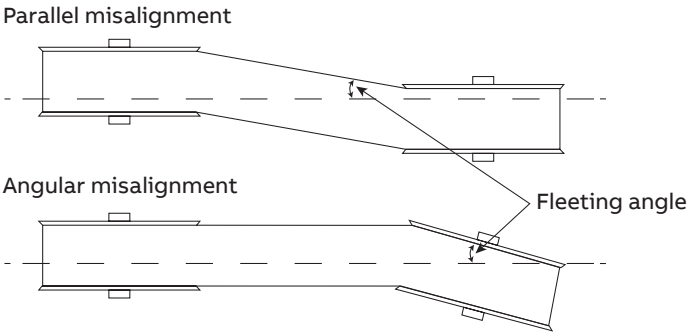

Drive misalignment can also cause belt tracking problems. However, light flange contact by the belt is normal and won't affect performance.

For those drives in which the center distance is greater than eight times the small sprocket diameter, belt tracking can be a problem. In these cases, the parallel position of the two sprockets may need to be adjusted until only one flange guides the belt in the system and the belt tracks fully on all sprockets. Regardless of the drive center distance, the optimum drive performance will occur with the belt lightly contacting one flange in the system. The worst case is for the belt to contact flanges on opposite sides of the system. This traps the belt between opposite flanges and can force the belt into undesirable parallel misalignment.

Selection program available online at ptwizard.com and passport.baldor.com

HT500 – 8M poly chain GT carbon horsepower ratings

12mm width

RPM	22	24	26	28	30	32	34	36	38	40	44	48	56	64	72	80
													Rated horsepower for small sprocket (Number of teeth and pitch diameter, inches)			
	2.206	2.406	2.607	2.807	3.008	3.208	3.409	3.609	3.810	4.010	4.411	4.812	5.614	6.416	7.218	8.020
10	0.15	0.17	0.19	0.20	0.22	0.24	0.26	0.28	0.29	0.31	0.35	0.38	0.45	0.52	0.59	0.66
20	0.23	0.26	0.29	0.32	0.35	0.38	0.41	0.44	0.47	0.50	0.55	0.61	0.72	0.84	0.95	1.06
40	0.39	0.44	0.49	0.54	0.59	0.64	0.69	0.74	0.79	0.84	0.94	1.04	1.23	1.43	1.62	1.82
50	0.46	0.52	0.58	0.64	0.70	0.76	0.82	0.88	0.94	1.00	1.12	1.24	1.48	1.72	1.95	2.18
60	0.53	0.60	0.67	0.74	0.81	0.88	0.95	1.03	1.10	1.17	1.31	1.44	1.72	2.00	2.27	2.54
100	0.79	0.91	1.02	1.13	1.24	1.35	1.46	1.57	1.68	1.79	2.01	2.23	2.66	3.09	3.51	3.93
200	1.42	1.63	1.84	2.05	2.25	2.46	2.66	2.87	3.07	3.28	3.68	4.08	4.89	5.68	6.47	7.25
300	2.01	2.31	2.61	2.91	3.21	3.51	3.81	4.10	4.40	4.69	5.28	5.86	7.02	8.17	9.30	10.43
400	2.57	2.97	3.36	3.75	4.14	4.53	4.92	5.30	5.69	6.07	6.83	7.59	9.09	10.58	12.06	13.53
500	3.12	3.61	4.09	4.57	5.05	5.53	6.00	6.47	6.95	7.41	8.35	9.28	11.12	12.95	14.76	16.56
600	3.66	4.23	4.80	5.37	5.94	6.50	7.06	7.62	8.18	8.73	9.84	10.94	13.12	15.28	17.42	19.55
700	4.18	4.84	5.50	6.16	6.81	7.46	8.11	8.75	9.39	10.03	11.31	12.57	15.09	17.57	20.04	22.48
800	4.70	5.44	6.19	6.93	7.67	8.40	9.14	9.86	10.59	11.31	12.76	14.19	17.03	19.84	22.62	25.38
870	5.05	5.86	6.67	7.47	8.27	9.06	9.85	10.64	11.42	12.20	13.76	15.31	18.37	21.41	24.41	27.39
1000	5.70	6.62	7.54	8.45	9.36	10.26	11.16	12.05	12.95	13.83	15.60	17.36	20.84	24.29	27.70	31.08
1160	6.49	7.54	8.59	9.64	10.68	11.71	12.75	13.77	14.80	15.81	17.84	19.85	23.84	27.79	31.69	35.56
1200	6.68	7.77	8.86	9.93	11.01	12.07	13.14	14.20	15.25	16.30	18.39	20.47	24.59	28.65	32.68	36.67
1400	7.64	8.89	10.15	11.39	12.63	13.85	15.08	16.30	17.52	18.73	21.14	23.53	28.26	32.94	37.57	42.14
1600	8.58	9.99	11.41	12.81	14.22	15.61	17.00	18.37	19.75	21.11	23.84	26.54	31.88	37.16	42.37	47.52
1750	9.27	10.81	12.35	13.87	15.39	16.90	18.41	19.91	21.40	22.88	25.83	28.76	34.56	40.28	45.92	51.49
2000	10.40	12.14	13.89	15.61	17.33	19.03	20.74	22.43	24.12	25.79	29.12	32.43	38.96	45.40	51.74	57.99
2400	12.17	14.23	16.29	18.33	20.36	22.38	24.39	26.38	28.37	30.35	34.28	38.17	45.85	53.39	60.80	68.08
2800	13.89	16.27	18.64	20.98	23.32	25.64	27.96	30.25	32.53	34.80	39.31	43.77	52.55	61.15	69.57	77.80
3200	15.57	18.26	20.93	23.58	26.22	28.84	31.45	34.03	36.60	39.15	44.22	49.23	59.07	68.67	78.03	
3500	16.81	19.72	22.62	25.49	28.36	31.19	34.02	36.81	39.60	42.36	47.83	53.24	63.84	74.15		
4000	18.82	22.11	25.38	28.62	31.85	35.03	38.21	41.35	44.48	47.58	53.71	59.75	71.56			
4500	20.78	24.43	28.08	31.67	35.25	38.78	42.30	45.78	49.24	52.65	59.42	66.06				
5000	22.69	26.71	30.70	34.64	38.57	42.44	46.29	50.08	53.86	57.59	64.94	72.15				
5500	24.56	28.92	33.27	37.55	41.81	46.00	50.17	54.27	58.35	62.37	70.29					

12mm width

RPM	1.00 to 1.02	1.03 to 1.05	1.06 to 1.10	1.11 to 1.15	1.16 to 1.21	1.22 to 1.30	1.31 to 1.43	1.44 to 1.64	1.65 to 2.15	2.16 and over
	Additional horsepower per belt for speed ratio of speed down drive									
10	0.00	0.00	0.00	0.00	0.00	0.00	0.00	0.01	0.01	0.01
20	0.00	0.00	0.00	0.00	0.01	0.01	0.01	0.01	0.01	0.01
40	0.00	0.00	0.01	0.01	0.01	0.02	0.02	0.02	0.03	0.03
50	0.00	0.00	0.01	0.01	0.02	0.02	0.02	0.03	0.03	0.04
60	0.00	0.01	0.01	0.01	0.02	0.02	0.03	0.03	0.04	0.04
100	0.00	0.01	0.02	0.02	0.03	0.04	0.05	0.06	0.07	0.07
200	0.00	0.02	0.03	0.05	0.06	0.08	0.09	0.11	0.13	0.14
300	0.00	0.03	0.05	0.07	0.09	0.12	0.14	0.17	0.20	0.21
400	0.00	0.03	0.06	0.09	0.12	0.16	0.19	0.22	0.26	0.29
500	0.00	0.04	0.08	0.12	0.16	0.19	0.24	0.28	0.33	0.36
600	0.00	0.05	0.10	0.14	0.19	0.23	0.28	0.33	0.39	0.43
700	0.00	0.06	0.11	0.16	0.22	0.27	0.33	0.39	0.46	0.50
800	0.00	0.07	0.13	0.19	0.25	0.31	0.38	0.45	0.52	0.57
870	0.00	0.07	0.14	0.20	0.27	0.34	0.41	0.48	0.57	0.62
1000	0.00	0.09	0.16	0.23	0.31	0.39	0.47	0.56	0.65	0.71
1160	0.00	0.10	0.18	0.27	0.36	0.45	0.55	0.65	0.76	0.83
1200	0.00	0.10	0.19	0.28	0.37	0.47	0.57	0.67	0.78	0.86
1400	0.00	0.12	0.22	0.33	0.44	0.55	0.66	0.78	0.91	1.00
1600	0.00	0.14	0.25	0.38	0.50	0.62	0.75	0.89	1.04	1.14
1750	0.00	0.15	0.28	0.41	0.54	0.68	0.82	0.97	1.14	1.25
2000	0.00	0.17	0.32	0.47	0.62	0.78	0.94	1.11	1.30	1.43
2400	0.00	0.20	0.38	0.56	0.75	0.93	1.13	1.34	1.56	1.72
2800	0.00	0.24	0.45	0.66	0.87	1.09	1.32	1.56	1.83	2.00
3200	0.00	0.27	0.51	0.75	1.00	1.25	1.51	1.78	2.09	2.29
3500	0.00	0.30	0.56	0.82	1.09	1.36	1.65	1.95	2.28	2.50
4000	0.00	0.34	0.64	0.94	1.24	1.56	1.88	2.23	2.61	2.86
4500	0.00	0.38	0.72	1.06	1.40	1.75	2.12	2.51	2.93	3.22
5000	0.00	0.43	0.80	1.17	1.56	1.95	2.35	2.78	3.26	3.57
5500	0.00	0.47	0.88	1.29	1.71	2.14	2.59	3.06	3.59	3.93

Selection program available online at ptwizard.com and passport.baldor.com

HT500 – 8M poly chain GT carbon horsepower ratings

21mm width

RPM	22	24	26	28	30	32	34	36	38	40	44	48	56	64	72	80
	2.206	2.406	2.607	2.807	3.008	3.208	3.409	3.609	3.810	4.010	4.411	4.812	5.614	6.416	7.218	8.020
10	0.28	0.31	0.35	0.37	0.41	0.44	0.48	0.52	0.54	0.57	0.65	0.70	0.83	0.96	1.09	1.22
20	0.43	0.48	0.54	0.59	0.65	0.70	0.76	0.81	0.87	0.93	1.02	1.13	1.33	1.55	1.76	1.96
40	0.72	0.81	0.91	1.00	1.09	1.18	1.28	1.37	1.46	1.55	1.74	1.92	2.28	2.65	3.00	3.37
50	0.85	0.96	1.07	1.18	1.30	1.41	1.52	1.63	1.74	1.85	2.07	2.29	2.74	3.18	3.61	4.03
60	0.98	1.11	1.24	1.37	1.50	1.63	1.76	1.91	2.04	2.16	2.42	2.66	3.18	3.70	4.20	4.70
100	1.46	1.68	1.89	2.09	2.29	2.50	2.70	2.90	3.11	3.31	3.72	4.13	4.92	5.72	6.49	7.27
200	2.63	3.02	3.40	3.79	4.16	4.55	4.92	5.31	5.68	6.07	6.81	7.55	9.05	10.51	11.97	13.41
300	3.72	4.27	4.83	5.38	5.94	6.49	7.05	7.59	8.14	8.68	9.77	10.84	12.99	15.11	17.21	19.30
400	4.75	5.49	6.22	6.94	7.66	8.38	9.10	9.81	10.53	11.23	12.64	14.04	16.82	19.57	22.31	25.03
500	5.77	6.68	7.57	8.45	9.34	10.23	11.10	11.97	12.86	13.71	15.45	17.17	20.57	23.96	27.31	30.64
600	6.77	7.83	8.88	9.93	10.99	12.03	13.06	14.10	15.13	16.15	18.20	20.24	24.27	28.27	32.23	36.17
700	7.73	8.95	10.18	11.40	12.60	13.80	15.00	16.19	17.37	18.56	20.92	23.25	27.92	32.50	37.07	41.59
800	8.70	10.06	11.45	12.82	14.19	15.54	16.91	18.24	19.59	20.92	23.61	26.25	31.51	36.70	41.85	46.95
870	9.34	10.84	12.34	13.82	15.30	16.76	18.22	19.68	21.13	22.57	25.46	28.32	33.98	39.61	45.16	50.67
1000	10.55	12.25	13.95	15.63	17.32	18.98	20.65	22.29	23.96	25.59	28.86	32.12	38.55	44.94	51.25	57.50
1160	12.01	13.95	15.89	17.83	19.76	21.66	23.59	25.47	27.38	29.25	33.00	36.72	44.10	51.41	58.63	65.79
1200	12.36	14.37	16.39	18.37	20.37	22.33	24.31	26.27	28.21	30.16	34.02	37.87	45.49	53.00	60.46	67.84
1400	14.13	16.45	18.78	21.07	23.37	25.62	27.90	30.16	32.41	34.65	39.11	43.53	52.28	60.94	69.50	77.96
1600	15.87	18.48	21.11	23.70	26.31	28.88	31.45	33.98	36.54	39.05	44.10	49.10	58.98	68.75	78.38	87.91
1750	17.15	20.00	22.85	25.66	28.47	31.27	34.06	36.83	39.59	42.33	47.79	53.21	63.94	74.52	84.95	95.26
2000	19.24	22.46	25.70	28.88	32.06	35.21	38.37	41.50	44.62	47.71	53.87	60.00	72.08	83.99	95.72	107.28
2400	22.51	26.33	30.14	33.91	37.67	41.40	45.12	48.80	52.48	56.15	63.42	70.61	84.82	98.77	112.48	125.95
2800	25.70	30.10	34.48	38.81	43.14	47.43	51.73	55.96	60.18	64.38	72.72	80.97	97.22	113.13	128.70	143.93
3200	28.80	33.78	38.72	43.62	48.51	53.35	58.18	62.96	67.71	72.43	81.81	91.08	109.28	127.04	144.36	0.00
3500	31.10	36.48	41.85	47.16	52.47	57.70	62.94	68.10	73.26	78.37	88.49	98.49	118.10	137.18	0.00	0.00
4000	34.82	40.90	46.95	52.95	58.92	64.81	70.69	76.50	82.29	88.02	99.36	110.54	132.39	0.00	0.00	0.00
4500	38.44	45.20	51.95	58.59	65.21	71.74	78.26	84.69	91.09	97.40	109.93	122.21	0.00	0.00	0.00	0.00
5000	41.98	49.41	56.80	64.08	71.35	78.51	85.64	92.65	99.64	106.54	120.14	133.48	0.00	0.00	0.00	0.00
5500	45.44	53.50	61.55	69.47	77.35	85.10	92.81	100.40	107.95	115.38	130.04	0.00	0.00	0.00	0.00	0.00

Rated horsepower for small sprocket (Number of teeth and pitch diameter, inches)

21mm width

RPM	1.00 to 1.02	1.03 to 1.05	1.06 to 1.10	1.11 to 1.15	1.16 to 1.21	1.22 to 1.30	1.31 to 1.43	1.44 to 1.64	1.65 to 2.15	2.16 and over
10	0.00	0.00	0.00	0.00	0.01	0.01	0.01	0.01	0.01	0.00
20	0.00	0.00	0.01	0.01	0.01	0.01	0.02	0.02	0.02	0.00
40	0.00	0.01	0.01	0.02	0.02	0.03	0.03	0.04	0.05	0.00
50	0.00	0.01	0.01	0.02	0.03	0.04	0.04	0.05	0.06	0.00
60	0.00	0.01	0.02	0.03	0.03	0.04	0.05	0.06	0.07	0.00
100	0.00	0.02	0.03	0.04	0.06	0.07	0.09	0.10	0.12	0.00
200	0.00	0.03	0.06	0.09	0.12	0.14	0.17	0.21	0.24	0.00
300	0.00	0.05	0.09	0.13	0.17	0.22	0.26	0.31	0.36	0.00
400	0.00	0.06	0.12	0.17	0.23	0.29	0.35	0.41	0.48	0.00
500	0.00	0.08	0.15	0.22	0.29	0.36	0.44	0.52	0.60	0.00
600	0.00	0.09	0.18	0.26	0.35	0.43	0.52	0.62	0.72	0.00
700	0.00	0.11	0.21	0.30	0.40	0.50	0.61	0.72	0.84	0.00
800	0.00	0.13	0.24	0.35	0.46	0.58	0.70	0.82	0.96	0.00
870	0.00	0.14	0.26	0.38	0.50	0.63	0.76	0.90	1.05	0.00
1000	0.00	0.16	0.29	0.43	0.58	0.72	0.87	1.03	1.21	0.00
1160	0.00	0.18	0.34	0.50	0.67	0.84	1.01	1.19	1.40	0.00
1200	0.00	0.19	0.35	0.52	0.69	0.86	1.05	1.24	1.45	0.00
1400	0.00	0.22	0.41	0.61	0.81	1.01	1.22	1.44	1.69	0.00
1600	0.00	0.25	0.47	0.69	0.92	1.15	1.39	1.65	1.93	0.00
1750	0.00	0.28	0.52	0.76	1.01	1.26	1.52	1.80	2.11	0.00
2000	0.00	0.32	0.59	0.87	1.15	1.44	1.74	2.06	2.41	0.00
2400	0.00	0.38	0.71	1.04	1.38	1.73	2.09	2.47	2.89	0.00
2800	0.00	0.44	0.83	1.22	1.61	2.02	2.44	2.88	3.38	0.00
3200	0.00	0.50	0.94	1.39	1.84	2.31	2.79	3.30	3.86	0.00
3500	0.00	0.55	1.03	1.52	2.01	2.52	3.05	3.61	4.22	0.00
4000	0.00	0.63	1.18	1.74	2.30	2.88	3.48	4.12	4.82	0.00
4500	0.00	0.71	1.33	1.95	2.59	3.24	3.92	4.64	5.43	0.00
5000	0.00	0.79	1.47	2.17	2.88	3.60	4.36	5.15	6.03	0.00
5500	0.00	0.87	1.62	2.39	3.17	3.96	4.79	5.67	6.63	0.00

Additional horsepower per belt for speed ratio of speed down drive

Selection program available online at ptwizard.com and passport.baldor.com

HT500 – 8M poly chain GT carbon horsepower ratings

36mm width

RPM	22	24	26	28	30	32	34	36	38	40	44	48	56	64	72	80
													Rated horsepower for small sprocket (Number of teeth and pitch diameter, inches)			
	2.206	2.406	2.607	2.807	3.008	3.208	3.409	3.609	3.810	4.010	4.411	4.812	5.614	6.416	7.218	8.020
10	0.45	0.51	0.57	0.60	0.66	0.72	0.78	0.84	0.87	0.93	1.05	1.14	1.35	1.56	1.77	1.98
20	0.69	0.78	0.87	0.96	1.05	1.14	1.23	1.32	1.41	1.50	1.65	1.83	2.16	2.52	2.85	3.18
40	1.17	1.32	1.47	1.62	1.77	1.92	2.07	2.22	2.37	2.52	2.82	3.12	3.69	4.29	4.86	5.46
50	1.38	1.56	1.74	1.92	2.10	2.28	2.46	2.64	2.82	3.00	3.36	3.72	4.44	5.16	5.85	6.54
60	1.59	1.80	2.01	2.22	2.43	2.64	2.85	3.09	3.30	3.51	3.93	4.32	5.16	6.00	6.81	7.62
100	2.37	2.73	3.06	3.39	3.72	4.05	4.38	4.71	5.04	5.37	6.03	6.69	7.98	9.27	10.53	11.79
200	4.26	4.89	5.52	6.15	6.75	7.38	7.98	8.61	9.21	9.84	11.04	12.24	14.67	17.04	19.41	21.75
300	6.03	6.93	7.83	8.73	9.63	10.53	11.43	12.30	13.20	14.07	15.84	17.58	21.06	24.51	27.90	31.29
400	7.71	8.91	10.08	11.25	12.42	13.59	14.76	15.90	17.07	18.21	20.49	22.77	27.27	31.74	36.18	40.59
500	9.36	10.83	12.27	13.71	15.15	16.59	18.00	19.41	20.85	22.23	25.05	27.84	33.36	38.85	44.28	49.68
600	10.98	12.69	14.40	16.11	17.82	19.50	21.18	22.86	24.54	26.19	29.52	32.82	39.36	45.84	52.26	58.65
700	12.54	14.52	16.50	18.48	20.43	22.38	24.33	26.25	28.17	30.09	33.93	37.71	45.27	52.71	60.12	67.44
800	14.10	16.32	18.57	20.79	23.01	25.20	27.42	29.58	31.77	33.93	38.28	42.57	51.09	59.52	67.86	76.14
870	15.15	17.58	20.01	22.41	24.81	27.18	29.55	31.92	34.26	36.60	41.28	45.93	55.11	64.23	73.23	82.17
1000	17.10	19.86	22.62	25.35	28.08	30.78	33.48	36.15	38.85	41.49	46.80	52.08	62.52	72.87	83.10	93.24
1160	19.47	22.62	25.77	28.92	32.04	35.13	38.25	41.31	44.40	47.43	53.52	59.55	71.52	83.37	95.07	106.68
1200	20.04	23.31	26.58	29.79	33.03	36.21	39.42	42.60	45.75	48.90	55.17	61.41	73.77	85.95	98.04	110.01
1400	22.92	26.67	30.45	34.17	37.89	41.55	45.24	48.90	52.56	56.19	63.42	70.59	84.78	98.82	112.71	126.42
1600	25.74	29.97	34.23	38.43	42.66	46.83	51.00	55.11	59.25	63.33	71.52	79.62	95.64	111.48	127.11	142.56
1750	27.81	32.43	37.05	41.61	46.17	50.70	55.23	59.73	64.20	68.64	77.49	86.28	103.68	120.84	137.76	154.47
2000	31.20	36.42	41.67	46.83	51.99	57.09	62.22	67.29	72.36	77.37	87.36	97.29	116.88	136.20	155.22	173.97
2400	36.51	42.69	48.87	54.99	61.08	67.14	73.17	79.14	85.11	91.05	102.84	114.51	137.55	160.17	182.40	204.24
2800	41.67	48.81	55.92	62.94	69.96	76.92	83.88	90.75	97.59	104.40	117.93	131.31	157.65	183.45	208.71	233.40
3200	46.71	54.78	62.79	70.74	78.66	86.52	94.35	102.09	109.80	117.45	132.66	147.69	177.21	206.01	234.09	0.00
3500	50.43	59.16	67.86	76.47	85.08	93.57	102.06	110.43	118.80	127.08	143.49	159.72	191.52	222.45	0.00	0.00
4000	56.46	66.33	76.14	85.86	95.55	105.09	114.63	124.05	133.44	142.74	161.13	179.25	214.68	0.00	0.00	0.00
4500	62.34	73.29	84.24	95.01	105.75	116.34	126.90	137.34	147.72	157.95	178.26	198.18	0.00	0.00	0.00	0.00
5000	68.07	80.13	92.10	103.92	115.71	127.32	138.87	150.24	161.58	172.77	194.82	216.45	0.00	0.00	0.00	0.00
5500	73.68	86.76	99.81	112.65	125.43	138.00	150.51	162.81	175.05	187.11	210.87	0.00	0.00	0.00	0.00	0.00

36mm width

RPM	1.00 to 1.02	1.03 to 1.05	1.06 to 1.10	1.11 to 1.15	1.16 to 1.21	1.22 to 1.30	1.31 to 1.43	1.44 to 1.64	1.65 to 2.15	2.16 and over
	Additional horsepower per belt for speed ratio of speed down drive									
10	0.00	0.00	0.00	0.01	0.01	0.01	0.01	0.02	0.02	0.02
20	0.00	0.01	0.01	0.01	0.02	0.02	0.03	0.03	0.04	0.04
40	0.00	0.01	0.02	0.03	0.04	0.05	0.06	0.07	0.08	0.09
50	0.00	0.01	0.02	0.04	0.05	0.06	0.07	0.08	0.10	0.11
60	0.00	0.02	0.03	0.04	0.06	0.07	0.08	0.10	0.12	0.13
100	0.00	0.03	0.05	0.07	0.09	0.12	0.14	0.17	0.20	0.21
200	0.00	0.05	0.10	0.14	0.19	0.23	0.28	0.33	0.39	0.43
300	0.00	0.08	0.14	0.21	0.28	0.35	0.42	0.50	0.59	0.64
400	0.00	0.10	0.19	0.28	0.37	0.47	0.57	0.67	0.78	0.86
500	0.00	0.13	0.24	0.35	0.47	0.58	0.71	0.84	0.98	1.07
600	0.00	0.15	0.29	0.42	0.56	0.70	0.85	1.00	1.17	1.29
700	0.00	0.18	0.33	0.49	0.65	0.82	0.99	1.17	1.37	1.50
800	0.00	0.20	0.38	0.56	0.75	0.93	1.13	1.34	1.56	1.72
870	0.00	0.22	0.42	0.61	0.81	1.02	1.23	1.45	1.70	1.87
1000	0.00	0.26	0.48	0.70	0.93	1.17	1.41	1.67	1.96	2.14
1160	0.00	0.30	0.55	0.82	1.08	1.36	1.64	1.94	2.27	2.49
1200	0.00	0.31	0.57	0.85	1.12	1.40	1.70	2.00	2.35	2.57
1400	0.00	0.36	0.67	0.99	1.31	1.64	1.98	2.34	2.74	3.00
1600	0.00	0.41	0.76	1.13	1.49	1.87	2.26	2.67	3.13	3.43
1750	0.00	0.45	0.84	1.23	1.63	2.05	2.47	2.92	3.42	3.75
2000	0.00	0.51	0.96	1.41	1.87	2.34	2.83	3.34	3.91	4.29
2400	0.00	0.61	1.15	1.69	2.24	2.80	3.39	4.01	4.69	5.15
2800	0.00	0.72	1.34	1.97	2.61	3.27	3.96	4.68	5.48	6.01
3200	0.00	0.82	1.53	2.25	2.99	3.74	4.52	5.35	6.26	6.86
3500	0.00	0.90	1.67	2.46	3.27	4.09	4.94	5.85	6.84	7.51
4000	0.00	1.02	1.91	2.82	3.73	4.67	5.65	6.68	7.82	8.58
4500	0.00	1.15	2.15	3.17	4.20	5.26	6.36	7.52	8.80	9.65
5000	0.00	1.28	2.39	3.52	4.67	5.84	7.06	8.35	9.78	10.72
5500	0.00	1.41	2.63	3.87	5.13	6.43	7.77	9.19	10.76	11.80

Selection program available online at ptwizard.com and passport.baldor.com

HT500 – 8M poly chain GT carbon horsepower ratings

62mm width

RPM	22	24	26	28	30	32	34	36	38	40	44	48	56	64	72	80
	2.206	2.406	2.607	2.807	3.008	3.208	3.409	3.609	3.810	4.010	4.411	4.812	5.614	6.416	7.218	8.020
10	0.78	0.88	0.98	1.03	1.14	1.24	1.34	1.45	1.50	1.60	1.81	1.96	2.33	2.69	3.05	3.41
20	1.19	1.34	1.50	1.65	1.81	1.96	2.12	2.27	2.43	2.58	2.84	3.15	3.72	4.34	4.91	5.48
40	2.02	2.27	2.53	2.79	3.05	3.31	3.57	3.82	4.08	4.34	4.86	5.37	6.36	7.39	8.37	9.40
50	2.38	2.69	3.00	3.31	3.62	3.93	4.24	4.55	4.86	5.17	5.79	6.41	7.65	8.89	10.08	11.26
60	2.74	3.10	3.46	3.82	4.19	4.55	4.91	5.32	5.68	6.05	6.77	7.44	8.89	10.33	11.73	13.12
100	4.08	4.70	5.27	5.84	6.41	6.98	7.54	8.11	8.68	9.25	10.39	11.52	13.74	15.97	18.14	20.31
200	7.34	8.42	9.51	10.59	11.63	12.71	13.74	14.83	15.86	16.95	19.01	21.08	25.27	29.35	33.43	37.46
300	10.39	11.94	13.49	15.04	16.59	18.14	19.69	21.18	22.73	24.23	27.28	30.28	36.27	42.21	48.05	53.89
400	13.28	15.35	17.36	19.38	21.39	23.41	25.42	27.38	29.40	31.36	35.29	39.22	46.97	54.66	62.31	69.91
500	16.12	18.65	21.13	23.61	26.09	28.57	31.00	33.43	35.91	38.29	43.14	47.95	57.45	66.91	76.26	85.56
600	18.91	21.86	24.80	27.75	30.69	33.58	36.48	39.37	42.26	45.11	50.84	56.52	67.79	78.95	90.00	101.01
700	21.60	25.01	28.42	31.83	35.19	38.54	41.90	45.21	48.52	51.82	58.44	64.95	77.97	90.78	103.54	116.15
800	24.28	28.11	31.98	35.81	39.63	43.40	47.22	50.94	54.72	58.44	65.93	73.32	87.99	102.51	116.87	131.13
870	26.09	30.28	34.46	38.60	42.73	46.81	50.89	54.97	59.00	63.03	71.09	79.10	94.91	110.62	126.12	141.52
1000	29.45	34.20	38.96	43.66	48.36	53.01	57.66	62.26	66.91	71.46	80.60	89.69	107.67	125.50	143.12	160.58
1160	33.53	38.96	44.38	49.81	55.18	60.50	65.88	71.15	76.47	81.69	92.17	102.56	123.17	143.58	163.73	183.73
1200	34.51	40.15	45.78	51.31	56.89	62.36	67.89	73.37	78.79	84.22	95.02	105.76	127.05	148.03	168.85	189.46
1400	39.47	45.93	52.44	58.85	65.26	71.56	77.91	84.22	90.52	96.77	109.22	121.57	146.01	170.19	194.11	217.72
1600	44.33	51.62	58.95	66.19	73.47	80.65	87.83	94.91	102.04	109.07	123.17	137.12	164.71	191.99	218.91	245.52
1750	47.90	55.85	63.81	71.66	79.52	87.32	95.12	102.87	110.57	118.21	133.46	148.59	178.56	208.11	237.25	266.03
2000	53.73	62.72	71.77	80.65	89.54	98.32	107.16	115.89	124.62	133.25	150.45	167.56	201.29	234.57	267.33	299.62
2400	62.88	73.52	84.17	94.71	105.19	115.63	126.02	136.30	146.58	156.81	177.11	197.21	236.89	275.85	314.14	351.75
2800	71.77	84.06	96.31	108.40	120.49	132.47	144.46	156.29	168.07	179.80	203.10	226.15	271.51	315.94	359.45	401.97
3200	80.45	94.34	108.14	121.83	135.47	149.01	162.49	175.82	189.10	202.28	228.47	254.36	305.20	354.80	403.16	0.00
3500	86.85	101.89	116.87	131.70	146.53	161.15	175.77	190.19	204.60	218.86	247.12	275.08	329.84	383.11	0.00	0.00
4000	97.24	114.24	131.13	147.87	164.56	180.99	197.42	213.64	229.81	245.83	277.50	308.71	369.73	0.00	0.00	0.00
4500	107.36	126.22	145.08	163.63	182.13	200.36	218.55	236.53	254.41	272.03	307.01	341.31	0.00	0.00	0.00	0.00
5000	117.23	138.00	158.62	178.97	199.28	219.27	239.17	258.75	278.28	297.55	335.53	372.78	0.00	0.00	0.00	0.00
5500	126.89	149.42	171.90	194.01	216.02	237.67	259.21	280.40	301.48	322.25	363.17	0.00	0.00	0.00	0.00	0.00

Rated horsepower for small sprocket (Number of teeth and pitch diameter, inches)

52mm width

RPM	1.00 to 1.02	1.03 to 1.05	1.06 to 1.10	1.11 to 1.15	1.16 to 1.21	1.22 to 1.30	1.31 to 1.43	1.44 to 1.64	1.65 to 2.15	2.16 and over
10	0.00	0.00	0.01	0.01	0.02	0.02	0.02	0.03	0.03	0.04
20	0.00	0.01	0.02	0.02	0.03	0.04	0.05	0.06	0.07	0.07
40	0.00	0.02	0.03	0.05	0.06	0.08	0.10	0.12	0.13	0.15
50	0.00	0.02	0.04	0.06	0.08	0.10	0.12	0.14	0.17	0.18
60	0.00	0.03	0.05	0.07	0.10	0.12	0.15	0.17	0.20	0.22
100	0.00	0.04	0.08	0.12	0.16	0.20	0.24	0.29	0.34	0.37
200	0.00	0.09	0.16	0.24	0.32	0.40	0.49	0.58	0.67	0.74
300	0.00	0.13	0.25	0.36	0.48	0.60	0.73	0.86	1.01	1.11
400	0.00	0.18	0.33	0.49	0.64	0.81	0.97	1.15	1.35	1.48
500	0.00	0.22	0.41	0.61	0.80	1.01	1.22	1.44	1.68	1.85
600	0.00	0.26	0.49	0.73	0.96	1.21	1.46	1.73	2.02	2.22
700	0.00	0.31	0.58	0.85	1.13	1.41	1.70	2.01	2.36	2.59
800	0.00	0.35	0.66	0.97	1.29	1.61	1.95	2.30	2.69	2.95
870	0.00	0.38	0.72	1.06	1.40	1.75	2.12	2.50	2.93	3.21
1000	0.00	0.44	0.82	1.21	1.61	2.01	2.43	2.88	3.37	3.69
1160	0.00	0.51	0.95	1.41	1.87	2.33	2.82	3.34	3.91	4.28
1200	0.00	0.53	0.99	1.46	1.93	2.42	2.92	3.45	4.04	4.43
1400	0.00	0.62	1.15	1.70	2.25	2.82	3.41	4.03	4.72	5.17
1600	0.00	0.70	1.32	1.94	2.57	3.22	3.89	4.60	5.39	5.91
1750	0.00	0.77	1.44	2.12	2.81	3.52	4.26	5.03	5.89	6.46
2000	0.00	0.88	1.65	2.43	3.22	4.03	4.87	5.75	6.74	7.39
2400	0.00	1.06	1.98	2.91	3.86	4.83	5.84	6.90	8.08	8.86
2800	0.00	1.23	2.30	3.40	4.50	5.64	6.81	8.05	9.43	10.34
3200	0.00	1.41	2.63	3.88	5.14	6.44	7.79	9.21	10.78	11.82
3500	0.00	1.54	2.88	4.24	5.63	7.04	8.52	10.07	11.79	12.93
4000	0.00	1.76	3.29	4.85	6.43	8.05	9.73	11.51	13.47	14.77
4500	0.00	1.98	3.70	5.46	7.24	9.06	10.95	12.95	15.16	16.62
5000	0.00	2.20	4.12	6.06	8.04	10.06	12.17	14.38	16.84	18.47
5500	0.00	2.42	4.53	6.67	8.84	11.07	13.38	15.82	18.52	20.32

Additional horsepower per belt for speed ratio of speed down drive

Selection program available online at ptwizard.com and passport.baldor.com

Selection

HT500 – 14M poly chain GT carbon horsepower ratings

20mm width

RPM	28	29	30	32	34	36	38	40	44	48	52	56	64	72	80
												Rated horsepower for small sprocket (Number of teeth and pitch diameter, inches)			
	4.912	5.088	5.263	5.614	5.965	6.316	6.667	7.018	7.720	8.421	9.123	9.825	11.229	12.632	14.036
10	1.17	1.22	1.27	1.36	1.45	1.54	1.63	1.72	1.91	2.09	2.27	2.44	2.80	3.16	3.51
20	1.84	1.92	1.99	2.14	2.28	2.43	2.58	2.72	3.01	3.30	3.59	3.88	4.45	5.01	5.57
40	3.06	3.18	3.31	3.56	3.81	4.06	4.31	4.55	5.04	5.53	6.02	6.50	7.46	8.41	9.36
60	4.20	4.37	4.55	4.89	5.24	5.59	5.93	6.27	6.95	7.63	8.30	8.97	10.30	11.61	12.92
100	6.35	6.62	6.88	7.42	7.95	8.48	9.01	9.53	10.57	11.61	12.64	13.66	15.69	17.69	19.68
200	11.33	11.82	12.31	13.28	14.24	15.20	16.16	17.11	19.00	20.88	22.74	24.59	28.25	31.88	35.46
300	15.99	16.69	17.39	18.77	20.15	21.52	22.88	24.23	26.93	29.59	32.24	34.87	40.08	45.22	50.31
400	20.46	21.36	22.25	24.03	25.80	27.56	29.32	31.06	34.53	37.96	41.36	44.74	51.43	58.03	64.55
500	24.76	25.86	26.95	29.12	31.27	33.42	35.55	37.67	41.89	46.06	50.19	54.30	62.42	70.42	78.33
600	28.95	30.24	31.52	34.07	36.60	39.12	41.62	44.11	49.05	53.94	58.80	63.61	73.12	82.48	91.72
700	33.04	34.52	35.98	38.90	41.80	44.69	47.55	50.40	56.06	61.65	67.20	72.70	83.56	94.25	104.78
800	37.05	38.71	40.35	43.64	46.90	50.14	53.36	56.57	62.92	69.20	75.43	81.60	93.78	105.75	117.54
870	39.81	41.59	43.37	46.90	50.41	53.90	57.37	60.82	67.65	74.41	81.10	87.73	100.81	113.66	126.30
1000	44.84	46.86	48.86	52.85	56.82	60.76	64.68	68.57	76.28	83.90	91.44	98.91	113.62	128.05	142.21
1160	50.89	53.19	55.47	60.02	64.53	69.02	73.47	77.89	86.66	95.30	103.86	112.32	128.97	145.25	161.20
1200	52.38	54.75	57.10	61.78	66.43	71.05	75.63	80.19	89.21	98.11	106.92	115.62	132.74	149.47	165.85
1400	59.70	62.42	65.10	70.46	75.77	81.05	86.28	91.48	101.76	111.89	121.91	131.79	151.18	170.06	188.48
1600	66.84	69.89	72.91	78.91	84.87	90.78	96.65	102.46	113.97	125.28	136.45	147.45	168.98	189.85	210.10
1750	72.09	75.38	78.63	85.12	91.55	97.93	104.25	110.52	122.91	135.08	147.07	158.87	181.90	204.16	225.66
2000	80.63	84.32	87.96	95.23	102.43	109.55	116.61	123.61	137.41	150.94	164.24	177.29	202.65		
2400	93.82	98.12	102.37	110.82	119.18	127.45	135.63	143.72	159.62	175.15	190.34	205.17			
2800	106.48	111.36	116.18	125.75	135.20	144.53	153.74	162.83	180.63	197.93					
3000	112.61	117.77	122.86	132.97	142.94	152.77	162.46	172.01	190.68						
3500	127.41	133.22	138.96	150.32	161.49	172.47	183.26	193.86							
4000	141.44	147.86	154.18	166.68	178.92	190.90									

20mm width

RPM	1.00 to 1.03	1.04 to 1.10	1.11 to 1.19	1.20 to 1.30	1.31 to 1.45	1.46 to 1.67	1.68 to 2.02	2.03 to 2.69	2.70 to 4.64	4.65 and Over
							Additional horsepower per belt for speed ratio of speed down drive			
10	0.00	0.01	0.01	0.01	0.02	0.03	0.03	0.04	0.04	0.05
20	0.00	0.01	0.02	0.03	0.04	0.06	0.06	0.07	0.08	0.09
40	0.00	0.02	0.04	0.06	0.08	0.11	0.12	0.14	0.16	0.18
60	0.00	0.03	0.06	0.09	0.12	0.17	0.18	0.21	0.24	0.27
100	0.00	0.05	0.10	0.15	0.20	0.28	0.30	0.35	0.41	0.46
200	0.00	0.11	0.20	0.30	0.40	0.56	0.60	0.70	0.81	0.91
300	0.00	0.16	0.30	0.45	0.59	0.84	0.89	1.05	1.22	1.37
400	0.00	0.21	0.40	0.60	0.79	1.12	1.19	1.40	1.62	1.83
500	0.00	0.26	0.50	0.74	0.99	1.41	1.49	1.75	2.03	2.28
600	0.00	0.32	0.60	0.89	1.19	1.69	1.79	2.10	2.43	2.74
700	0.00	0.37	0.70	1.04	1.38	1.97	2.09	2.45	2.84	3.20
800	0.00	0.42	0.80	1.19	1.58	2.25	2.38	2.80	3.25	3.65
870	0.00	0.46	0.88	1.29	1.72	2.45	2.59	3.05	3.53	3.97
1000	0.00	0.53	1.01	1.49	1.98	2.81	2.98	3.50	4.06	4.56
1160	0.00	0.61	1.17	1.73	2.29	3.26	3.46	4.06	4.71	5.30
1200	0.00	0.63	1.21	1.79	2.37	3.37	3.58	4.20	4.87	5.48
1400	0.00	0.74	1.41	2.08	2.77	3.94	4.17	4.90	5.68	6.39
1600	0.00	0.84	1.61	2.38	3.16	4.50	4.77	5.60	6.49	7.30
1750	0.00	0.92	1.76	2.60	3.46	4.92	5.21	6.13	7.10	7.99
2000	0.00	1.05	2.01	2.98	3.95	5.62	5.96	7.00	8.12	9.13
2400	0.00	1.26	2.41	3.57	4.74	6.75	7.15	8.40	9.74	10.96
2800	0.00	1.47	2.82	4.17	5.53	7.87	8.34	9.81	11.36	12.78
3000	0.00	1.58	3.02	4.47	5.93	8.44	8.94	10.51	12.17	13.69
3500	0.00	1.84	3.52	5.21	6.92	9.84	10.43	12.26	14.20	15.98
4000	0.00	2.10	4.02	5.95	7.91	11.25	11.92	14.01	16.23	18.26

Selection program available online at ptwizard.com and passport.baldor.com

HT500 – 14M poly chain GT carbon horsepower ratings

37mm width

RPM	28	29	30	32	34	36	38	40	44	48	52	56	64	72	80
	4.912	5.088	5.263	5.614	5.965	6.316	6.667	7.018	7.720	8.421	9.123	9.825	11.229	12.632	14.036
10	2.16	2.26	2.35	2.52	2.68	2.85	3.02	3.18	3.53	3.87	4.20	4.51	5.18	5.85	6.49
20	3.40	3.55	3.68	3.96	4.22	4.50	4.77	5.03	5.57	6.11	6.64	7.18	8.23	9.27	10.30
40	5.66	5.88	6.12	6.59	7.05	7.51	7.97	8.42	9.32	10.23	11.14	12.03	13.80	15.56	17.32
60	7.77	8.08	8.42	9.05	9.69	10.34	10.97	11.60	12.86	14.12	15.36	16.59	19.06	21.48	23.90
100	11.75	12.25	12.73	13.73	14.71	15.69	16.67	17.63	19.55	21.48	23.38	25.27	29.03	32.73	36.41
200	20.96	21.87	22.77	24.57	26.34	28.12	29.90	31.65	35.15	38.63	42.07	45.49	52.26	58.98	65.60
300	29.58	30.88	32.17	34.72	37.28	39.81	42.33	44.83	49.82	54.74	59.64	64.51	74.15	83.66	93.07
400	37.85	39.52	41.16	44.46	47.73	50.99	54.24	57.46	63.88	70.23	76.52	82.77	95.15	107.36	119.42
500	45.81	47.84	49.86	53.87	57.85	61.83	65.77	69.69	77.50	85.21	92.85	100.46	115.48	130.28	144.91
600	53.56	55.94	58.31	63.03	67.71	72.37	77.00	81.60	90.74	99.79	108.78	117.68	135.27	152.59	169.68
700	61.12	63.86	66.56	71.97	77.33	82.68	87.97	93.24	103.71	114.05	124.32	134.50	154.59	174.36	193.84
800	68.54	71.61	74.65	80.73	86.77	92.76	98.72	104.65	116.40	128.02	139.55	150.96	173.49	195.64	217.45
870	73.65	76.94	80.23	86.77	93.26	99.72	106.13	112.52	125.15	137.66	150.04	162.30	186.50	210.27	233.66
1000	82.95	86.69	90.39	97.77	105.12	112.41	119.66	126.85	141.12	155.22	169.16	182.98	210.20	236.89	263.09
1160	94.15	98.40	102.62	111.04	119.38	127.69	135.92	144.10	160.32	176.31	192.14	207.79	238.59	268.71	298.22
1200	96.90	101.29	105.64	114.29	122.90	131.44	139.92	148.35	165.04	181.50	197.80	213.90	245.57	276.52	306.82
1400	110.45	115.48	120.44	130.35	140.17	149.94	159.62	169.24	188.26	207.00	225.53	243.81	279.68	314.61	348.69
1600	123.65	129.30	134.88	145.98	157.01	167.94	178.80	189.55	210.84	231.77	252.43	272.78	312.61	351.22	388.69
1750	133.37	139.45	145.47	157.47	169.37	181.17	192.86	204.46	227.38	249.90	272.08	293.91	336.52	377.70	417.47
2000	149.17	155.99	162.73	176.18	189.50	202.67	215.73	228.68	254.21	279.24	303.84	327.99	374.90	0.00	0.00
2400	173.57	181.52	189.38	205.02	220.48	235.78	250.92	265.88	295.30	324.03	352.13	379.56	0.00	0.00	0.00
2800	196.99	206.02	214.93	232.64	250.12	267.38	284.42	301.24	334.17	366.17	0.00	0.00	0.00	0.00	0.00
3000	208.33	217.87	227.29	245.99	264.44	282.62	300.55	318.22	352.76	0.00	0.00	0.00	0.00	0.00	0.00
3500	235.71	246.46	257.08	278.09	298.76	319.07	339.03	358.64	0.00	0.00	0.00	0.00	0.00	0.00	0.00
4000	261.66	273.54	285.23	308.36	331.00	353.17	0.00	0.00	0.00	0.00	0.00	0.00	0.00	0.00	0.00

Rated horsepower for small sprocket (Number of teeth and pitch diameter, inches)

37mm width

RPM	1.00 to 1.03	1.04 to 1.10	1.11 to 1.19	1.20 to 1.30	1.31 to 1.45	1.46 to 1.67	1.68 to 2.02	2.03 to 2.69	2.70 to 4.64	4.65 and Over
10	0.00	0.01	0.02	0.03	0.04	0.05	0.06	0.06	0.08	0.08
20	0.00	0.02	0.04	0.06	0.07	0.10	0.11	0.13	0.15	0.17
40	0.00	0.04	0.07	0.11	0.15	0.21	0.22	0.26	0.30	0.34
60	0.00	0.06	0.11	0.17	0.22	0.31	0.33	0.39	0.45	0.51
100	0.00	0.10	0.19	0.28	0.37	0.52	0.55	0.65	0.75	0.84
200	0.00	0.19	0.37	0.55	0.73	1.04	1.10	1.30	1.50	1.69
300	0.00	0.29	0.56	0.83	1.10	1.56	1.65	1.94	2.25	2.53
400	0.00	0.39	0.74	1.10	1.46	2.08	2.20	2.59	3.00	3.38
500	0.00	0.49	0.93	1.38	1.83	2.60	2.76	3.24	3.75	4.22
600	0.00	0.58	1.12	1.65	2.19	3.12	3.31	3.89	4.50	5.07
700	0.00	0.68	1.30	1.93	2.56	3.64	3.86	4.54	5.26	5.91
800	0.00	0.78	1.49	2.20	2.93	4.16	4.41	5.18	6.01	6.76
870	0.00	0.85	1.62	2.40	3.18	4.53	4.80	5.64	6.53	7.35
1000	0.00	0.97	1.86	2.75	3.66	5.20	5.51	6.48	7.51	8.44
1160	0.00	1.13	2.16	3.19	4.24	6.03	6.39	7.52	8.71	9.80
1200	0.00	1.17	2.23	3.30	4.39	6.24	6.61	7.77	9.01	10.13
1400	0.00	1.36	2.61	3.85	5.12	7.28	7.72	9.07	10.51	11.82
1600	0.00	1.56	2.98	4.41	5.85	8.32	8.82	10.37	12.01	13.51
1750	0.00	1.70	3.26	4.82	6.40	9.10	9.65	11.34	13.14	14.78
2000	0.00	1.95	3.72	5.51	7.31	10.40	11.02	12.96	15.01	16.89
2400	0.00	2.34	4.47	6.61	8.78	12.48	13.23	15.55	18.02	20.27
2800	0.00	2.73	5.21	7.71	10.24	14.57	15.43	18.14	21.02	23.65
3000	0.00	2.92	5.58	8.26	10.97	15.61	16.54	19.44	22.52	25.33
3500	0.00	3.41	6.52	9.64	12.80	18.21	19.29	22.68	26.28	29.56
4000	0.00	3.89	7.45	11.01	14.63	20.81	22.05	25.91	30.03	33.78

Additional horsepower per belt for speed ratio of speed down drive

Selection program available online at ptwizard.com and passport.baldor.com

Selection

HT500 – 14M poly chain GT carbon horsepower ratings

68mm width

RPM	28	29	30	32	34	36	38	40	44	48	52	56	64	72	80
												Rated horsepower for small sprocket (Number of teeth and pitch diameter, inches)			
	4.912	5.088	5.263	5.614	5.965	6.316	6.667	7.018	7.720	8.421	9.123	9.825	11.229	12.632	14.036
10	3.98	4.15	4.32	4.62	4.93	5.24	5.54	5.85	6.49	7.11	7.72	8.30	9.52	10.74	11.93
20	6.26	6.53	6.77	7.28	7.75	8.26	8.77	9.25	10.23	11.22	12.21	13.19	15.13	17.03	18.94
40	10.40	10.81	11.25	12.10	12.95	13.80	14.65	15.47	17.14	18.80	20.47	22.10	25.36	28.59	31.82
60	14.28	14.86	15.47	16.63	17.82	19.01	20.16	21.32	23.63	25.94	28.22	30.50	35.02	39.47	43.93
100	21.59	22.51	23.39	25.23	27.03	28.83	30.63	32.40	35.94	39.47	42.98	46.44	53.35	60.15	66.91
200	38.52	40.19	41.85	45.15	48.42	51.68	54.94	58.17	64.60	70.99	77.32	83.61	96.05	108.39	120.56
300	54.37	56.75	59.13	63.82	68.51	73.17	77.79	82.38	91.56	100.61	109.62	118.56	136.27	153.75	171.05
400	69.56	72.62	75.65	81.70	87.72	93.70	99.69	105.60	117.40	129.06	140.62	152.12	174.86	197.30	219.47
500	84.18	87.92	91.63	99.01	106.32	113.63	120.87	128.08	142.43	156.60	170.65	184.62	212.23	239.43	266.32
600	98.43	102.82	107.17	115.84	124.44	133.01	141.51	149.97	166.77	183.40	199.92	216.27	248.61	280.43	311.85
700	112.34	117.37	122.33	132.26	142.12	151.95	161.67	171.36	190.60	209.61	228.48	247.18	284.10	320.45	356.25
800	125.97	131.61	137.19	148.38	159.46	170.48	181.42	192.34	213.93	235.28	256.46	277.44	318.85	359.55	399.64
870	135.35	141.41	147.46	159.46	171.39	183.26	195.06	206.79	230.01	252.99	275.74	298.28	342.75	386.44	429.42
1000	152.46	159.32	166.12	179.69	193.19	206.58	219.91	233.14	259.35	285.26	310.90	336.29	386.31	435.37	483.51
1160	173.03	180.85	188.60	204.07	219.40	234.67	249.80	264.83	294.64	324.02	353.12	381.89	438.50	493.85	548.08
1200	178.09	186.15	194.14	210.05	225.86	241.57	257.14	272.65	303.31	333.57	363.53	393.11	451.32	508.20	563.89
1400	202.98	212.23	221.34	239.56	257.62	275.57	293.35	311.03	345.98	380.43	414.49	448.09	514.01	578.20	640.83
1600	227.26	237.63	247.89	268.29	288.56	308.65	328.61	348.36	387.50	425.95	463.93	501.33	574.53	645.49	714.34
1750	245.11	256.29	267.34	289.41	311.27	332.96	354.45	375.77	417.89	459.27	500.04	540.16	618.46	694.14	767.24
2000	274.14	286.69	299.06	323.78	348.26	372.47	396.47	420.27	467.19	513.20	558.42	602.79	689.01	0.00	0.00
2400	318.99	333.61	348.06	376.79	405.21	433.33	461.14	488.65	542.71	595.51	647.16	697.58	0.00	0.00	0.00
2800	362.03	378.62	395.01	427.55	459.68	491.40	522.72	553.62	614.14	672.96	0.00	0.00	0.00	0.00	0.00
3000	382.87	400.42	417.72	452.10	486.00	519.42	552.36	584.83	648.31	0.00	0.00	0.00	0.00	0.00	0.00
3500	433.19	452.95	472.46	511.09	549.07	586.40	623.08	659.12	0.00	0.00	0.00	0.00	0.00	0.00	0.00
4000	480.90	502.72	524.21	566.71	608.33	649.06	0.00	0.00	0.00	0.00	0.00	0.00	0.00	0.00	0.00

68mm width

RPM	1.00 to 1.03	1.04 to 1.10	1.11 to 1.19	1.20 to 1.30	1.31 to 1.45	1.46 to 1.67	1.68 to 2.02	2.03 to 2.69	2.70 to 4.64	4.65 and Over
							Additional horsepower per belt for speed ratio of speed down drive			
10	0.00	0.02	0.03	0.05	0.07	0.10	0.10	0.12	0.14	0.16
20	0.00	0.04	0.07	0.10	0.13	0.19	0.20	0.24	0.28	0.31
40	0.00	0.07	0.14	0.20	0.27	0.38	0.41	0.48	0.55	0.62
60	0.00	0.11	0.21	0.30	0.40	0.57	0.61	0.71	0.83	0.93
100	0.00	0.18	0.34	0.51	0.67	0.96	1.01	1.19	1.38	1.55
200	0.00	0.36	0.68	1.01	1.34	1.91	2.03	2.38	2.76	3.10
300	0.00	0.54	1.03	1.52	2.02	2.87	3.04	3.57	4.14	4.66
400	0.00	0.72	1.37	2.02	2.69	3.82	4.05	4.76	5.52	6.21
500	0.00	0.89	1.71	2.53	3.36	4.78	5.06	5.95	6.90	7.76
600	0.00	1.07	2.05	3.04	4.03	5.74	6.08	7.14	8.28	9.31
700	0.00	1.25	2.39	3.54	4.70	6.69	7.09	8.33	9.66	10.86
800	0.00	1.43	2.74	4.05	5.38	7.65	8.10	9.53	11.04	12.42
870	0.00	1.56	2.98	4.40	5.85	8.32	8.81	10.36	12.00	13.50
1000	0.00	1.79	3.42	5.06	6.72	9.56	10.13	11.91	13.80	15.52
1160	0.00	2.08	3.97	5.87	7.80	11.09	11.75	13.81	16.00	18.00
1200	0.00	2.15	4.11	6.07	8.06	11.47	12.16	14.29	16.56	18.62
1400	0.00	2.50	4.79	7.08	9.41	13.38	14.18	16.67	19.32	21.73
1600	0.00	2.86	5.47	8.10	10.75	15.30	16.21	19.05	22.08	24.83
1750	0.00	3.13	5.99	8.86	11.76	16.73	17.73	20.84	24.15	27.16
2000	0.00	3.58	6.84	10.12	13.44	19.12	20.26	23.81	27.59	31.04
2400	0.00	4.29	8.21	12.15	16.13	22.94	24.31	28.58	33.11	37.25
2800	0.00	5.01	9.58	14.17	18.82	26.77	28.36	33.34	38.63	43.46
3000	0.00	5.37	10.26	15.18	20.16	28.68	30.39	35.72	41.39	46.56
3500	0.00	6.26	11.97	17.71	23.52	33.46	35.45	41.67	48.29	54.32
4000	0.00	7.16	13.68	20.24	26.88	38.24	40.52	47.63	55.19	62.08

Selection program available online at ptwizard.com and passport.baldor.com

Selection

HT500 basic Hp ratings - 14 mm

90mm width

RPM	28	29	30	32	34	36	38	40	44	48	52	56	64	72	80
												Rated horsepower for small sprocket (Number of teeth and pitch diameter, inches)			
	4.912	5.088	5.263	5.614	5.965	6.316	6.667	7.018	7.720	8.421	9.123	9.825	11.229	12.632	14.036
10	5.27	5.49	5.72	6.12	6.53	6.93	7.34	7.74	8.60	9.41	10.22	10.98	12.60	14.22	15.80
20	8.28	8.64	8.96	9.63	10.26	10.94	11.61	12.24	13.55	14.85	16.16	17.46	20.03	22.55	25.07
40	13.77	14.31	14.90	16.02	17.15	18.27	19.40	20.48	22.68	24.89	27.09	29.25	33.57	37.85	42.12
60	18.90	19.67	20.48	22.01	23.58	25.16	26.69	28.22	31.28	34.34	37.35	40.37	46.35	52.25	58.14
100	28.58	29.79	30.96	33.39	35.78	38.16	40.55	42.89	47.57	52.25	56.88	61.47	70.61	79.61	88.56
200	50.99	53.19	55.40	59.76	64.08	68.40	72.72	77.00	85.50	93.96	102.33	110.66	127.13	143.46	159.57
300	71.96	75.11	78.26	84.47	90.68	96.84	102.96	109.04	121.19	133.16	145.08	156.92	180.36	203.49	226.40
400	92.07	96.12	100.13	108.14	116.10	124.02	131.94	139.77	155.39	170.82	186.12	201.33	231.44	261.14	290.48
500	111.42	116.37	121.28	131.04	140.72	150.39	159.98	169.52	188.51	207.27	225.86	244.35	280.89	316.89	352.49
600	130.28	136.08	141.84	153.32	164.70	176.04	187.29	198.50	220.73	242.73	264.60	286.25	329.04	371.16	412.74
700	148.68	155.34	161.91	175.05	188.10	201.11	213.98	226.80	252.27	277.43	302.40	327.15	376.02	424.13	471.51
800	166.73	174.20	181.58	196.38	211.05	225.63	240.12	254.57	283.14	311.40	339.44	367.20	422.01	475.88	528.93
870	179.15	187.16	195.17	211.05	226.85	242.55	258.17	273.69	304.43	334.85	364.95	394.79	453.65	511.47	568.35
1000	201.78	210.87	219.87	237.83	255.69	273.42	291.06	308.57	343.26	377.55	411.48	445.10	511.29	576.23	639.95
1160	229.01	239.36	249.62	270.09	290.39	310.59	330.62	350.51	389.97	428.85	467.37	505.44	580.37	653.63	725.40
1200	235.71	246.38	256.95	278.01	298.94	319.73	340.34	360.86	401.45	441.50	481.14	520.29	597.33	672.62	746.33
1400	268.65	280.89	292.95	317.07	340.97	364.73	388.26	411.66	457.92	503.51	548.60	593.06	680.31	765.27	848.16
1600	300.78	314.51	328.10	355.10	381.92	408.51	434.93	461.07	512.87	563.76	614.03	663.53	760.41	854.33	945.45
1750	324.41	339.21	353.84	383.04	411.98	440.69	469.13	497.34	553.10	607.86	661.82	714.92	818.55	918.72	1015.47
2000	362.84	379.44	395.82	428.54	460.94	492.98	524.75	556.25	618.35	679.23	739.08	797.81	911.93	0.00	0.00
2400	422.19	441.54	460.67	498.69	536.31	573.53	610.34	646.74	718.29	788.18	856.53	923.27	0.00	0.00	0.00
2800	479.16	501.12	522.81	565.88	608.40	650.39	691.83	732.74	812.84	890.69	0.00	0.00	0.00	0.00	0.00
3000	506.75	529.97	552.87	598.37	643.23	687.47	731.07	774.05	858.06	0.00	0.00	0.00	0.00	0.00	0.00
3500	573.35	599.49	625.32	676.44	726.71	776.12	824.67	872.37	0.00	0.00	0.00	0.00	0.00	0.00	0.00
4000	636.48	665.37	693.81	750.06	805.14	859.05	0.00	0.00	0.00	0.00	0.00	0.00	0.00	0.00	0.00

90mm width

RPM	1.00 to 1.03	1.04 to 1.10	1.11 to 1.19	1.20 to 1.30	1.31 to 1.45	1.46 to 1.67	1.68 to 2.02	2.03 to 2.69	2.70 to 4.64	4.65 and Over
							Additional horsepower per belt for speed ratio of speed down drive			
10	0.00	0.02	0.05	0.07	0.09	0.13	0.13	0.16	0.18	0.21
20	0.00	0.05	0.09	0.13	0.18	0.25	0.27	0.32	0.37	0.41
40	0.00	0.09	0.18	0.27	0.36	0.51	0.54	0.63	0.73	0.82
60	0.00	0.14	0.27	0.40	0.53	0.76	0.80	0.95	1.10	1.23
100	0.00	0.24	0.45	0.67	0.89	1.27	1.34	1.58	1.83	2.05
200	0.00	0.47	0.91	1.34	1.78	2.53	2.68	3.15	3.65	4.11
300	0.00	0.71	1.36	2.01	2.67	3.80	4.02	4.73	5.48	6.16
400	0.00	0.95	1.81	2.68	3.56	5.06	5.36	6.30	7.30	8.22
500	0.00	1.18	2.26	3.35	4.45	6.33	6.70	7.88	9.13	10.27
600	0.00	1.42	2.72	4.02	5.34	7.59	8.04	9.46	10.96	12.32
700	0.00	1.66	3.17	4.69	6.23	8.86	9.39	11.03	12.78	14.38
800	0.00	1.89	3.62	5.36	7.12	10.12	10.73	12.61	14.61	16.43
870	0.00	2.06	3.94	5.83	7.74	11.01	11.66	13.71	15.89	17.87
1000	0.00	2.37	4.53	6.70	8.90	12.65	13.41	15.76	18.26	20.54
1160	0.00	2.75	5.25	7.77	10.32	14.68	15.55	18.28	21.18	23.83
1200	0.00	2.84	5.43	8.04	10.67	15.18	16.09	18.91	21.91	24.65
1400	0.00	3.31	6.34	9.38	12.45	17.71	18.77	22.06	25.57	28.76
1600	0.00	3.79	7.24	10.72	14.23	20.25	21.45	25.21	29.22	32.87
1750	0.00	4.14	7.92	11.72	15.57	22.14	23.46	27.58	31.96	35.95
2000	0.00	4.74	9.06	13.40	17.79	25.31	26.81	31.52	36.52	41.08
2400	0.00	5.68	10.87	16.07	21.35	30.37	32.18	37.82	43.83	49.30
2800	0.00	6.63	12.68	18.75	24.91	35.43	37.54	44.12	51.13	57.52
3000	0.00	7.10	13.58	20.09	26.69	37.96	40.22	47.28	54.78	61.62
3500	0.00	8.29	15.85	23.44	31.13	44.29	46.93	55.16	63.91	71.90
4000	0.00	9.47	18.11	26.79	35.58	50.61	53.63	63.03	73.04	82.17

Selection program available online at ptwizard.com and passport.baldor.com

Selection

HT500 basic Hp ratings - 14 mm

125mm width

RPM	28	29	30	32	34	36	38	40	44	48	52	56	64	72	80
												Rated horsepower for small sprocket (Number of teeth and pitch diameter, inches)			
	4.912	5.088	5.263	5.614	5.965	6.316	6.667	7.018	7.720	8.421	9.123	9.825	11.229	12.632	14.036
10	7.31	7.63	7.94	8.50	9.06	9.63	10.19	10.75	11.94	13.06	14.19	15.25	17.50	19.75	21.94
20	11.50	12.00	12.44	13.38	14.25	15.19	16.13	17.00	18.81	20.63	22.44	24.25	27.81	31.31	34.81
40	19.13	19.88	20.69	22.25	23.81	25.38	26.94	28.44	31.50	34.56	37.63	40.63	46.63	52.56	58.50
60	26.25	27.31	28.44	30.56	32.75	34.94	37.06	39.19	43.44	47.69	51.88	56.06	64.38	72.56	80.75
100	39.69	41.38	43.00	46.38	49.69	53.00	56.31	59.56	66.06	72.56	79.00	85.38	98.06	110.56	123.00
200	70.81	73.88	76.94	83.00	89.00	95.00	101.00	106.94	118.75	130.50	142.13	153.69	176.56	199.25	221.63
300	99.94	104.31	108.69	117.31	125.94	134.50	143.00	151.44	168.31	184.94	201.50	217.94	250.50	282.63	314.44
400	127.88	133.50	139.06	150.19	161.25	172.25	183.25	194.13	215.81	237.25	258.50	279.63	321.44	362.69	403.44
500	154.75	161.63	168.44	182.00	195.44	208.88	222.19	235.44	261.81	287.88	313.69	339.38	390.13	440.13	489.56
600	180.94	189.00	197.00	212.94	228.75	244.50	260.13	275.69	306.56	337.13	367.50	397.56	457.00	515.50	573.25
700	206.50	215.75	224.88	243.13	261.25	279.31	297.19	315.00	350.38	385.31	420.00	454.38	522.25	589.06	654.88
800	231.56	241.94	252.19	272.75	293.13	313.38	333.50	353.56	393.25	432.50	471.44	510.00	586.13	660.94	734.63
870	248.81	259.94	271.06	293.13	315.06	336.88	358.56	380.13	422.81	465.06	506.88	548.31	630.06	710.38	789.38
1000	280.25	292.88	305.38	330.31	355.13	379.75	404.25	428.56	476.75	524.38	571.50	618.19	710.13	800.31	888.81
1160	318.06	332.44	346.69	375.13	403.31	431.38	459.19	486.81	541.63	595.63	649.13	702.00	806.06	907.81	1007.50
1200	327.38	342.19	356.88	386.13	415.19	444.06	472.69	501.19	557.56	613.19	668.25	722.63	829.63	934.19	1036.56
1400	373.13	390.13	406.88	440.38	473.56	506.56	539.25	571.75	636.00	699.31	761.94	823.69	944.88	1062.88	1178.00
1600	417.75	436.81	455.69	493.19	530.44	567.38	604.06	640.38	712.31	783.00	852.81	921.56	1056.13	1186.56	1313.13
1750	450.56	471.13	491.44	532.00	572.19	612.06	651.56	690.75	768.19	844.25	919.19	992.94	1136.88	1276.00	1410.38
2000	503.94	527.00	549.75	595.19	640.19	684.69	728.81	772.56	858.81	943.38	1026.50	1108.06	1266.56	0.00	0.00
2400	586.38	613.25	639.81	692.63	744.88	796.56	847.69	898.25	997.63	1094.69	1189.63	1282.31	0.00	0.00	0.00
2800	665.50	696.00	726.13	785.94	845.00	903.31	960.88	1017.69	1128.94	1237.06	0.00	0.00	0.00	0.00	0.00
3000	703.81	736.06	767.88	831.06	893.38	954.81	1015.38	1075.06	1191.75	0.00	0.00	0.00	0.00	0.00	0.00
3500	796.31	832.63	868.50	939.50	1009.31	1077.94	1145.38	1211.63	0.00	0.00	0.00	0.00	0.00	0.00	0.00
4000	884.00	924.13	963.63	1041.75	1118.25	1193.13	0.00	0.00	0.00	0.00	0.00	0.00	0.00	0.00	0.00

125mm width

RPM	1.00 to 1.03	1.04 to 1.10	1.11 to 1.19	1.20 to 1.30	1.31 to 1.45	1.46 to 1.67	1.68 to 2.02	2.03 to 2.69	2.70 to 4.64	4.65 and Over
							Additional horsepower per belt for speed ratio of speed down drive			
10	0.00	0.03	0.06	0.09	0.12	0.18	0.19	0.22	0.25	0.29
20	0.00	0.07	0.13	0.19	0.25	0.35	0.37	0.44	0.51	0.57
40	0.00	0.13	0.25	0.37	0.49	0.70	0.74	0.88	1.01	1.14
60	0.00	0.20	0.38	0.56	0.74	1.05	1.12	1.31	1.52	1.71
100	0.00	0.33	0.63	0.93	1.24	1.76	1.86	2.19	2.54	2.85
200	0.00	0.66	1.26	1.86	2.47	3.51	3.72	4.38	5.07	5.71
300	0.00	0.99	1.89	2.79	3.71	5.27	5.59	6.57	7.61	8.56
400	0.00	1.32	2.52	3.72	4.94	7.03	7.45	8.75	10.15	11.41
500	0.00	1.64	3.14	4.65	6.18	8.79	9.31	10.94	12.68	14.26
600	0.00	1.97	3.77	5.58	7.41	10.54	11.17	13.13	15.22	17.12
700	0.00	2.30	4.40	6.51	8.65	12.30	13.03	15.32	17.75	19.97
800	0.00	2.63	5.03	7.44	9.88	14.06	14.90	17.51	20.29	22.82
870	0.00	2.86	5.47	8.09	10.75	15.29	16.20	19.04	22.07	24.82
1000	0.00	3.29	6.29	9.30	12.35	17.57	18.62	21.89	25.36	28.53
1160	0.00	3.81	7.29	10.79	14.33	20.39	21.60	25.39	29.42	33.09
1200	0.00	3.95	7.55	11.16	14.83	21.09	22.35	26.26	30.44	34.24
1400	0.00	4.60	8.80	13.02	17.30	24.60	26.07	30.64	35.51	39.94
1600	0.00	5.26	10.06	14.88	19.77	28.12	29.79	35.02	40.58	45.65
1750	0.00	5.75	11.01	16.28	21.62	30.75	32.59	38.30	44.38	49.93
2000	0.00	6.58	12.58	18.60	24.71	35.15	37.24	43.77	50.73	57.06
2400	0.00	7.89	15.09	22.33	29.65	42.18	44.69	52.53	60.87	68.47
2800	0.00	9.21	17.61	26.05	34.59	49.21	52.14	61.28	71.02	79.88
3000	0.00	9.87	18.87	27.91	37.06	52.72	55.86	65.66	76.09	85.59
3500	0.00	11.51	22.01	32.56	43.24	61.51	65.17	76.60	88.77	99.85
4000	0.00	13.15	25.15	37.21	49.42	70.30	74.49	87.55	101.45	114.12

Selection program available online at ptwizard.com and passport.baldor.com

HT500 selection table – 8mm pitch HT500 belts

Speed ratio	Sprocket combinations				Center distance, inches														
	DriveR		DriveN																
	No. of teeth	Pitch dia. inches	No. of teeth	Pitch dia. inches	640-8MX	720-8MX	800-8MX	896-8MX	960-8MX	1000-8MX	1040-8MX	1120-8MX	1200-8MX	1224-8MX	1280-8MX	1440-8MX	1600-8MX	1760-8MX	1792-8MX
Length factor*					**0.79**	**0.83**	**0.87**	**0.91**	**0.94**	**0.96**	**0.97**	**1.00**	**1.03**	**1.03**	**1.05**	**1.10**	**1.14**	**1.17**	**1.18**
1.000	22	2.206	22	2.206	9.13	10.71	12.28	14.17	15.43	16.22	17.00	18.58	20.15	20.63	21.73	24.88	28.03	31.18	31.81
1.000	25	2.506	25	2.506	8.66	10.24	11.81	13.70	14.96	15.75	16.53	18.11	19.68	20.16	21.26	24.41	27.56	30.71	31.34
1.000	26	2.607	26	2.607	8.50	10.08	11.65	13.54	14.80	15.59	16.37	17.95	19.52	20.00	21.10	24.25	27.40	30.55	31.18
1.000	27	2.707	27	2.707	8.35	9.92	11.50	13.39	14.65	15.43	16.22	17.79	19.37	19.84	20.94	24.09	27.24	30.39	31.02
1.000	28	2.807	28	2.807	8.19	9.77	11.34	13.23	14.49	15.28	16.06	17.64	19.21	19.69	20.79	23.94	27.09	30.24	30.87
1.000	29	2.907	29	2.907	8.03	9.61	11.18	13.07	14.33	15.12	15.90	17.48	19.05	19.53	20.63	23.78	26.93	30.08	30.71
1.000	30	3.008	30	3.008	7.88	9.45	11.03	12.92	14.18	14.96	15.75	17.32	18.90	19.37	20.47	23.62	26.77	29.92	30.55
1.000	31	3.108	31	3.108	7.72	9.29	10.87	12.76	14.02	14.80	15.59	17.16	18.74	19.21	20.31	23.46	26.61	29.76	30.39
1.000	32	3.208	32	3.208	7.56	9.14	10.71	12.60	13.86	14.65	15.43	17.01	18.58	19.06	20.16	23.31	26.46	29.61	30.24
1.000	33	3.308	33	3.308	7.40	8.98	10.55	12.44	13.70	14.49	15.27	16.85	18.42	18.90	20.00	23.15	26.30	29.45	30.08
1.000	34	3.409	34	3.409	7.25	8.82	10.40	12.29	13.55	14.33	15.12	16.69	18.27	18.74	19.84	22.99	26.14	29.29	29.92
1.000	35	3.509	35	3.509	7.09	8.66	10.24	12.13	13.39	14.17	14.96	16.53	18.11	18.58	19.68	22.83	25.98	29.13	29.76
1.000	36	3.609	36	3.609	6.93	8.51	10.08	11.97	13.23	14.02	14.80	16.38	17.95	18.43	19.53	22.68	25.83	28.98	29.61
1.000	37	3.709	37	3.709	6.77	8.35	9.92	11.81	13.07	13.86	14.64	16.22	17.79	18.27	19.37	22.52	25.67	28.82	29.45
1.000	38	3.810	38	3.810	6.62	8.19	9.77	11.66	12.92	13.70	14.49	16.06	17.64	18.11	19.21	22.36	25.51	28.66	29.29
1.000	39	3.910	39	3.910	6.46	8.03	9.61	11.50	12.76	13.54	14.33	15.90	17.48	17.95	19.05	22.20	25.35	28.50	29.13
1.000	40	4.010	40	4.010	6.30	7.88	9.45	11.34	12.60	13.39	14.17	15.75	17.32	17.80	18.90	22.05	25.20	28.35	28.98
1.000	41	4.110	41	4.110	6.14	7.72	9.29	11.18	12.44	13.23	14.01	15.59	17.16	17.64	18.74	21.89	25.04	28.19	28.82
1.000	42	4.211	42	4.211	5.99	7.56	9.14	11.03	12.29	13.07	13.86	15.43	17.01	17.48	18.58	21.73	24.88	28.03	28.66
1.000	45	4.511	45	4.511	5.51	7.09	8.66	10.55	11.81	12.60	13.38	14.96	16.53	17.01	18.11	21.26	24.41	27.56	28.19
1.000	48	4.812	48	4.812		6.62	8.19	10.08	11.34	12.13	12.91	14.49	16.06	16.54	17.64	20.79	23.94	27.09	27.72
1.000	50	5.013	50	5.013		6.30	7.88	9.77	11.03	11.81	12.60	14.17	15.75	16.22	17.32	20.47	23.62	26.77	27.40
1.000	53	5.314	53	5.314		5.83	7.40	9.29	10.55	11.34	12.12	13.70	15.27	15.75	16.85	20.00	23.15	26.30	26.93
1.000	56	5.614	56	5.614			6.93	8.82	10.08	10.87	11.65	13.23	14.80	15.28	16.38	19.53	22.68	25.83	26.46
1.000	60	6.015	60	6.015				8.19	9.45	10.24	11.02	12.60	14.17	14.65	15.75	18.90	22.05	25.20	25.83
1.000	63	6.316	63	6.316				7.72	8.98	9.76	10.55	12.12	13.70	14.17	15.27	18.42	21.57	24.72	25.35
1.000	67	6.717	67	6.717					8.35	9.13	9.92	11.49	13.07	13.54	14.64	17.79	20.94	24.09	24.72
1.000	71	7.118	71	7.118					7.72	8.50	9.29	10.86	12.44	12.91	14.01	17.16	20.31	23.46	24.09
1.000	75	7.519	75	7.519							8.66	10.23	11.81	12.28	13.38	16.53	19.68	22.83	23.46
1.000	80	8.020	80	8.020								9.45	11.02	11.50	12.60	15.75	18.90	22.05	22.68
1.024	41	4.110	42	4.211	6.06	7.64	9.21	11.10	12.36	13.15	13.93	15.51	17.08	17.56	18.66	21.81	24.96	28.11	28.74
1.025	40	4.010	41	4.110	6.22	7.80	9.37	11.26	12.52	13.31	14.09	15.67	17.24	17.72	18.82	21.97	25.12	28.27	28.90
1.026	38	3.810	39	3.910	6.54	8.11	9.69	11.58	12.84	13.62	14.41	15.98	17.56	18.03	19.13	22.28	25.43	28.58	29.21
1.026	39	3.910	40	4.010	6.38	7.95	9.53	11.42	12.68	13.46	14.25	15.82	17.40	17.87	18.97	22.12	25.27	28.42	29.05
1.027	37	3.709	38	3.810	6.69	8.27	9.84	11.73	12.99	13.78	14.56	16.14	17.71	18.19	19.29	22.44	25.59	28.74	29.37
1.028	36	3.609	37	3.709	6.85	8.43	10.00	11.89	13.15	13.94	14.72	16.30	17.87	18.35	19.45	22.60	25.75	28.90	29.53
1.029	34	3.409	35	3.509	7.17	8.74	10.32	12.21	13.47	14.25	15.04	16.61	18.19	18.66	19.76	22.91	26.06	29.21	29.84
1.029	35	3.509	36	3.609	7.01	8.58	10.16	12.05	13.31	14.09	14.88	16.45	18.03	18.50	19.60	22.75	25.90	29.05	29.68
1.030	33	3.308	34	3.409	7.32	8.90	10.47	12.36	13.62	14.41	15.19	16.77	18.34	18.82	19.92	23.07	26.22	29.37	30.00
1.031	32	3.208	33	3.308	7.48	9.06	10.63	12.52	13.78	14.57	15.35	16.93	18.50	18.98	20.08	23.23	26.38	29.53	30.16
1.032	31	3.108	32	3.208	7.64	9.21	10.79	12.68	13.94	14.72	15.51	17.08	18.66	19.13	20.23	23.38	26.53	29.68	30.31
1.033	30	3.008	31	3.108	7.80	9.37	10.95	12.84	14.10	14.88	15.67	17.24	18.82	19.29	20.39	23.54	26.69	29.84	30.47
1.034	29	2.907	30	3.008	7.95	9.53	11.10	12.99	14.25	15.04	15.82	17.40	18.97	19.45	20.55	23.70	26.85	30.00	30.63
1.036	28	2.807	29	2.907	8.11	9.69	11.26	13.15	14.41	15.20	15.98	17.56	19.13	19.61	20.71	23.86	27.01	30.16	30.79
1.037	27	2.707	28	2.807	8.27	9.84	11.42	13.31	14.57	15.35	16.14	17.71	19.29	19.76	20.86	24.01	27.16	30.31	30.94
1.038	26	2.607	27	2.707	8.43	10.00	11.58	13.47	14.73	15.51	16.30	17.87	19.45	19.92	21.02	24.17	27.32	30.47	31.10
1.040	25	2.506	26	2.607	8.58	10.16	11.73	13.62	14.88	15.67	16.45	18.03	19.60	20.08	21.18	24.33	27.48	30.63	31.26
1.042	48	4.812	50	5.013		6.46	8.03	9.92	11.18	11.97	12.75	14.33	15.90	16.38	17.48	20.63	23.78	26.93	27.56
1.050	40	4.010	42	4.211	6.14	7.72	9.29	11.18	12.44	13.23	14.01	15.59	17.16	17.64	18.74	21.89	25.04	28.19	28.82
1.050	60	6.015	63	6.316				7.95	9.21	10.00	10.78	12.36	13.93	14.41	15.51	18.66	21.81	24.96	25.59
1.051	39	3.910	41	4.110	6.30	7.88	9.45	11.34	12.60	13.39	14.17	15.75	17.32	17.80	18.90	22.05	25.20	28.35	28.98
1.053	38	3.810	40	4.010	6.46	8.03	9.61	11.50	12.76	13.54	14.33	15.90	17.48	17.95	19.05	22.20	25.35	28.50	29.13
1.054	37	3.709	39	3.910	6.62	8.19	9.77	11.66	12.92	13.70	14.49	16.06	17.64	18.11	19.21	22.36	25.51	28.66	29.29
1.056	36	3.609	38	3.810	6.77	8.35	9.92	11.81	13.07	13.86	14.64	16.22	17.79	18.27	19.37	22.52	25.67	28.82	29.45
1.056	71	7.118	75	7.519						8.19	8.97	10.55	12.12	12.60	13.70	16.85	20.00	23.15	23.78
1.057	35	3.509	37	3.709	6.93	8.51	10.08	11.97	13.23	14.02	14.80	16.38	17.95	18.43	19.53	22.68	25.83	28.98	29.61
1.057	53	5.314	56	5.614			7.17	9.06	10.32	11.10	11.89	13.46	15.04	15.51	16.61	19.76	22.91	26.06	26.69
1.059	34	3.409	36	3.609	7.09	8.66	10.24	12.13	13.39	14.17	14.96	16.53	18.11	18.58	19.68	22.83	25.98	29.13	29.76
1.060	50	5.013	53	5.314		6.06	7.64	9.53	10.79	11.57	12.36	13.93	15.51	15.98	17.08	20.23	23.38	26.53	27.16
1.060	67	6.717	71	7.118					8.03	8.82	9.60	11.18	12.75	13.23	14.33	17.48	20.63	23.78	24.41
1.061	33	3.308	35	3.509	7.25	8.82	10.40	12.29	13.55	14.33	15.12	16.69	18.27	18.74	19.84	22.99	26.14	29.29	29.92
1.063	32	3.208	34	3.409	7.40	8.98	10.55	12.44	13.70	14.49	15.27	16.85	18.42	18.90	20.00	23.15	26.30	29.45	30.08
1.063	63	6.316	67	6.717				7.40	8.66	9.45	10.23	11.81	13.38	13.86	14.96	18.11	21.26	24.41	25.04
1.065	31	3.108	33	3.308	7.56	9.14	10.71	12.60	13.86	14.65	15.43	17.01	18.58	19.06	20.16	23.31	26.46	29.61	30.24
1.067	30	3.008	32	3.208	7.72	9.29	10.87	12.76	14.02	14.80	15.59	17.16	18.74	19.21	20.31	23.46	26.61	29.76	30.39
1.067	45	4.511	48	4.812	5.28	6.85	8.43	10.32	11.58	12.36	13.15	14.72	16.30	16.77	17.87	21.02	24.17	27.32	27.95
1.067	75	7.519	80	8.020								9.84	11.41	11.89	12.99	16.14	19.29	22.44	23.07
1.069	29	2.907	31	3.108	7.88	9.45	11.03	12.92	14.18	14.96	15.75	17.32	18.90	19.37	20.47	23.62	26.77	29.92	30.55
1.071	28	2.807	30	3.008	8.03	9.61	11.18	13.07	14.33	15.12	15.90	17.48	19.05	19.53	20.63	23.78	26.93	30.08	30.71
1.071	42	4.211	45	4.511	5.75	7.32	8.90	10.79	12.05	12.83	13.62	15.19	16.77	17.24	18.34	21.49	24.64	27.79	28.42
1.071	56	5.614	60	6.015			6.61	8.50	9.76	10.55	11.33	12.91	14.49	14.96	16.06	19.21	22.36	25.51	26.14
1.074	27	2.707	29	2.907	8.19	9.77	11.34	13.23	14.49	15.28	16.06	17.64	19.21	19.69	20.79	23.94	27.09	30.24	30.87
1.077	26	2.607	28	2.807	8.35	9.92	11.50	13.39	14.65	15.43	16.22	17.79	19.37	19.84	20.94	24.09	27.24	30.39	31.02
1.077	39	3.910	42	4.211	6.22	7.80	9.37	11.26	12.52	13.31	14.09	15.67	17.24	17.72	18.82	21.97	25.12	28.27	28.90
1.079	38	3.810	41	4.110	6.38	7.95	9.53	11.42	12.68	13.46	14.25	15.82	17.40	17.87	18.97	22.12	25.27	28.42	29.05
1.080	25	2.506	27	2.707	8.51	10.08	11.66	13.55	14.81	15.59	16.38	17.95	19.53	20.00	21.10	24.25	27.40	30.55	31.18
1.081	37	3.709	40	4.010	6.54	8.11	9.69	11.58	12.84	13.62	14.41	15.98	17.56	18.03	19.13	22.28	25.43	28.58	29.21
Length factor*					**0.79**	**0.83**	**0.87**	**0.91**	**0.94**	**0.96**	**0.97**	**1.00**	**1.03**	**1.03**	**1.05**	**1.10**	**1.14**	**1.17**	**1.18**

* The length correction factor must be used to determine the proper belt width.

Selection program available online at ptwizard.com and passport.baldor.com

HT500 selection table – 8mm pitch HT500 belts (continued)

Speed ratio	Sprocket combinations				Center distance, inches														
	Driver		Driven																
	No. of teeth	Pitch dia. inches	No. of teeth	Pitch dia. inches	2000-8MX	2200-8MX	2240-8MX	2400-8MX	2520-8MX	2600-8MX	2800-8MX	2840-8MX	3048-8MX	3200-8MX	3280-8MX	3600-8MX	4000-8MX	4400-8MX	4480-8MX
Length factor*					**1.22**	**1.26**	**1.26**	**1.29**	**1.31**	**1.32**	**1.35**	**1.36**	**1.38**	**1.40**	**1.41**	**1.45**	**1.49**	**1.52**	**1.53**
1.000	22	2.206	22	2.206	35.90	39.84	40.63	43.78	46.14	47.71	51.65	52.44	56.53	59.52	61.10	67.40	75.27	83.15	84.72
1.000	25	2.506	25	2.506	35.43	39.37	40.16	43.31	45.67	47.24	51.18	51.97	56.06	59.05	60.63	66.93	74.80	82.68	84.25
1.000	26	2.607	26	2.607	35.27	39.21	40.00	43.15	45.51	47.08	51.02	51.81	55.90	58.89	60.47	66.77	74.64	82.52	84.09
1.000	27	2.707	27	2.707	35.12	39.05	39.84	42.99	45.35	46.93	50.87	51.65	55.75	58.74	60.31	66.61	74.49	82.36	83.94
1.000	28	2.807	28	2.807	34.96	38.90	39.69	42.84	45.20	46.77	50.71	51.50	55.59	58.58	60.16	66.46	74.33	82.21	83.78
1.000	29	2.907	29	2.907	34.80	38.74	39.53	42.68	45.04	46.61	50.55	51.34	55.43	58.42	60.00	66.30	74.17	82.05	83.62
1.000	30	3.008	30	3.008	34.65	38.58	39.37	42.52	44.88	46.46	50.40	51.18	55.28	58.27	59.84	66.14	74.02	81.89	83.47
1.000	31	3.108	31	3.108	34.49	38.42	39.21	42.36	44.72	46.30	50.24	51.02	55.12	58.11	59.68	65.98	73.86	81.73	83.31
1.000	32	3.208	32	3.208	34.33	38.27	39.06	42.21	44.57	46.14	50.08	50.87	54.96	57.95	59.53	65.83	73.70	81.58	83.15
1.000	33	3.308	33	3.308	34.17	38.11	38.90	42.05	44.41	45.98	49.92	50.71	54.80	57.79	59.37	65.67	73.54	81.42	82.99
1.000	34	3.409	34	3.409	34.02	37.95	38.74	41.89	44.25	45.83	49.77	50.55	54.65	57.64	59.21	65.51	73.39	81.26	82.84
1.000	35	3.509	35	3.509	33.86	37.79	38.58	41.73	44.09	45.67	49.61	50.39	54.49	57.48	59.05	65.35	73.23	81.10	82.68
1.000	36	3.609	36	3.609	33.70	37.64	38.43	41.58	43.94	45.51	49.45	50.24	54.33	57.32	58.90	65.20	73.07	80.95	82.52
1.000	37	3.709	37	3.709	33.54	37.48	38.27	41.42	43.78	45.35	49.29	50.08	54.17	57.16	58.74	65.04	72.91	80.79	82.36
1.000	38	3.810	38	3.810	33.39	37.32	38.11	41.26	43.62	45.20	49.14	49.92	54.02	57.01	58.58	64.88	72.76	80.63	82.21
1.000	39	3.910	39	3.910	33.23	37.16	37.95	41.10	43.46	45.04	48.98	49.76	53.86	56.85	58.42	64.72	72.60	80.47	82.05
1.000	40	4.010	40	4.010	33.07	37.01	37.80	40.95	43.31	44.88	48.82	49.61	53.70	56.69	58.27	64.57	72.44	80.32	81.89
1.000	41	4.110	41	4.110	32.91	36.85	37.64	40.79	43.15	44.72	48.66	49.45	53.54	56.53	58.11	64.41	72.28	80.16	81.73
1.000	42	4.211	42	4.211	32.76	36.69	37.48	40.63	42.99	44.57	48.51	49.29	53.39	56.38	57.95	64.25	72.13	80.00	81.58
1.000	45	4.511	45	4.511	32.28	36.22	37.01	40.16	42.52	44.09	48.03	48.82	52.91	55.90	57.48	63.78	71.65	79.53	81.10
1.000	48	4.812	48	4.812	31.81	35.75	36.54	39.69	42.05	43.62	47.56	48.35	52.44	55.43	57.01	63.31	71.18	79.06	80.63
1.000	50	5.013	50	5.013	31.50	35.43	36.22	39.37	41.73	43.31	47.25	48.03	52.13	55.12	56.69	62.99	70.87	78.74	80.32
1.000	53	5.314	53	5.314	31.02	34.96	35.75	38.90	41.26	42.83	46.77	47.56	51.65	54.64	56.22	62.52	70.39	78.27	79.84
1.000	56	5.614	56	5.614	30.55	34.49	35.28	38.43	40.79	42.36	46.30	47.09	51.18	54.17	55.75	62.05	69.92	77.80	79.37
1.000	60	6.015	60	6.015	29.92	33.86	34.65	37.80	40.16	41.73	45.67	46.46	50.55	53.54	55.12	61.42	69.29	77.17	78.74
1.000	63	6.316	63	6.316	29.45	33.38	34.17	37.32	39.68	41.26	45.20	45.98	50.08	53.07	54.64	60.94	68.82	76.69	78.27
1.000	67	6.717	67	6.717	28.82	32.75	33.54	36.69	39.05	40.63	44.57	45.35	49.45	52.44	54.01	60.31	68.19	76.06	77.64
1.000	71	7.118	71	7.118	28.19	32.12	32.91	36.06	38.42	40.00	43.94	44.72	48.82	51.81	53.38	59.68	67.56	75.43	77.01
1.000	75	7.519	75	7.519	27.56	31.49	32.28	35.43	37.79	39.37	43.31	44.09	48.19	51.18	52.75	59.05	66.93	74.80	76.38
1.000	80	8.020	80	8.020	26.77	30.71	31.50	34.65	37.01	38.58	42.52	43.31	47.40	50.39	51.97	58.27	66.14	74.02	75.59
1.024	41	4.110	42	4.211	32.83	36.77	37.56	40.71	43.07	44.64	48.58	49.37	53.46	56.45	58.03	64.33	72.20	80.08	81.65
1.025	40	4.010	41	4.110	32.99	36.93	37.72	40.87	43.23	44.80	48.74	49.53	53.62	56.61	58.19	64.49	72.36	80.24	81.81
1.026	38	3.810	39	3.910	33.31	37.24	38.03	41.18	43.54	45.12	49.06	49.84	53.94	56.93	58.50	64.80	72.68	80.55	82.13
1.026	39	3.910	40	4.010	33.15	37.08	37.87	41.02	43.38	44.96	48.90	49.68	53.78	56.77	58.34	64.64	72.52	80.39	81.97
1.027	37	3.709	38	3.810	33.46	37.40	38.19	41.34	43.70	45.27	49.21	50.00	54.09	57.08	58.66	64.96	72.83	80.71	82.28
1.028	36	3.609	37	3.709	33.62	37.56	38.35	41.50	43.86	45.43	49.37	50.16	54.25	57.24	58.82	65.12	72.99	80.87	82.44
1.029	34	3.409	35	3.509	33.94	37.87	38.66	41.81	44.17	45.75	49.69	50.47	54.57	57.56	59.13	65.43	73.31	81.18	82.76
1.029	35	3.509	36	3.609	33.78	37.71	38.50	41.65	44.01	45.59	49.53	50.31	54.41	57.40	58.97	65.27	73.15	81.02	82.60
1.030	33	3.308	34	3.409	34.09	38.03	38.82	41.97	44.33	45.90	49.84	50.63	54.72	57.71	59.29	65.59	73.46	81.34	82.91
1.031	32	3.208	33	3.308	34.25	38.19	38.98	42.13	44.49	46.06	50.00	50.79	54.88	57.87	59.45	65.75	73.62	81.50	83.07
1.032	31	3.108	32	3.208	34.41	38.34	39.13	42.28	44.64	46.22	50.16	50.94	55.04	58.03	59.60	65.90	73.78	81.65	83.23
1.033	30	3.008	31	3.108	34.57	38.50	39.29	42.44	44.80	46.38	50.32	51.10	55.20	58.19	59.76	66.06	73.94	81.81	83.39
1.034	29	2.907	30	3.008	34.72	38.66	39.45	42.60	44.96	46.53	50.47	51.26	55.35	58.34	59.92	66.22	74.09	81.97	83.54
1.036	28	2.807	29	2.907	34.88	38.82	39.61	42.76	45.12	46.69	50.63	51.42	55.51	58.50	60.08	66.38	74.25	82.13	83.70
1.037	27	2.707	28	2.807	35.04	38.97	39.76	42.91	45.27	46.85	50.79	51.57	55.67	58.66	60.23	66.53	74.41	82.28	83.86
1.038	26	2.607	27	2.707	35.20	39.13	39.92	43.07	45.43	47.01	50.95	51.73	55.83	58.82	60.39	66.69	74.57	82.44	84.02
1.040	25	2.506	26	2.607	35.35	39.29	40.08	43.23	45.59	47.16	51.10	51.89	55.98	58.97	60.55	66.85	74.72	82.60	84.17
1.042	48	4.812	50	5.013	31.65	35.59	36.38	39.53	41.89	43.46	47.40	48.19	52.28	55.27	56.85	63.15	71.02	78.90	80.47
1.050	40	4.010	42	4.211	32.91	36.85	37.64	40.79	43.15	44.72	48.66	49.45	53.54	56.53	58.11	64.41	72.28	80.16	81.73
1.050	60	6.015	63	6.316	29.68	33.62	34.41	37.56	39.92	41.49	45.44	46.22	50.32	53.31	54.88	61.18	69.06	76.93	78.51
1.051	39	3.910	41	4.110	33.07	37.01	37.80	40.95	43.31	44.88	48.82	49.61	53.70	56.69	58.27	64.57	72.44	80.32	81.89
1.053	38	3.810	40	4.010	33.23	37.16	37.95	41.10	43.46	45.04	48.98	49.76	53.86	56.85	58.42	64.72	72.60	80.47	82.05
1.054	37	3.709	39	3.910	33.39	37.32	38.11	41.26	43.62	45.20	49.14	49.92	54.02	57.01	58.58	64.88	72.76	80.63	82.21
1.056	36	3.609	38	3.810	33.54	37.48	38.27	41.42	43.78	45.35	49.29	50.08	54.17	57.16	58.74	65.04	72.91	80.79	82.36
1.056	71	7.118	75	7.519	27.87	31.81	32.60	35.75	38.11	39.68	43.62	44.41	48.50	51.49	53.07	59.37	67.24	75.12	76.69
1.057	35	3.509	37	3.709	33.70	37.64	38.43	41.58	43.94	45.51	49.45	50.24	54.33	57.32	58.90	65.20	73.07	80.95	82.52
1.057	53	5.314	56	5.614	30.79	34.72	35.51	38.66	41.02	42.60	46.54	47.32	51.42	54.41	55.98	62.28	70.16	78.03	79.61
1.059	34	3.409	36	3.609	33.86	37.79	38.58	41.73	44.09	45.67	49.61	50.39	54.49	57.48	59.05	65.35	73.23	81.10	82.68
1.060	50	5.013	53	5.314	31.26	35.19	35.98	39.13	41.49	43.07	47.01	47.79	51.89	54.88	56.45	62.75	70.63	78.50	80.08
1.060	67	6.717	71	7.118	28.50	32.44	33.23	36.38	38.74	40.31	44.25	45.04	49.13	52.12	53.70	60.00	67.87	75.75	77.32
1.061	33	3.308	35	3.509	34.02	37.95	38.74	41.89	44.25	45.83	49.77	50.55	54.65	57.64	59.21	65.51	73.39	81.26	82.84
1.063	32	3.208	34	3.409	34.17	38.11	38.90	42.05	44.41	45.98	49.92	50.71	54.80	57.79	59.37	65.67	73.54	81.42	82.99
1.063	63	6.316	67	6.717	29.13	33.07	33.86	37.01	39.37	40.94	44.88	45.67	49.76	52.75	54.33	60.63	68.50	76.38	77.95
1.065	31	3.108	33	3.308	34.33	38.27	39.06	42.21	44.57	46.14	50.08	50.87	54.96	57.95	59.53	65.83	73.70	81.58	83.15
1.067	30	3.008	32	3.208	34.49	38.42	39.21	42.36	44.72	46.30	50.24	51.02	55.12	58.11	59.68	65.98	73.86	81.73	83.31
1.067	45	4.511	48	4.812	32.05	35.98	36.77	39.92	42.28	43.86	47.80	48.58	52.68	55.67	57.24	63.54	71.42	79.29	80.87
1.067	75	7.519	80	8.020	27.16	31.10	31.89	35.04	37.40	38.97	42.91	43.70	47.80	50.79	52.36	58.66	66.54	74.41	75.99
1.069	29	2.907	31	3.108	34.65	38.58	39.37	42.52	44.88	46.46	50.40	51.18	55.28	58.27	59.84	66.14	74.02	81.89	83.47
1.071	28	2.807	30	3.008	34.80	38.74	39.53	42.68	45.04	46.61	50.55	51.34	55.43	58.42	60.00	66.30	74.17	82.05	83.62
1.071	42	4.211	45	4.511	32.52	36.45	37.24	40.39	42.75	44.33	48.27	49.05	53.15	56.14	57.71	64.01	71.89	79.76	81.34
1.071	56	5.614	60	6.015	30.24	34.17	34.96	38.11	40.47	42.05	45.99	46.77	50.87	53.86	55.43	61.73	69.61	77.48	79.06
1.074	27	2.707	29	2.907	34.96	38.90	39.69	42.84	45.20	46.77	50.71	51.50	55.59	58.58	60.16	66.46	74.33	82.21	83.78
1.077	26	2.607	28	2.807	35.12	39.05	39.84	42.99	45.35	46.93	50.87	51.65	55.75	58.74	60.31	66.61	74.49	82.36	83.94
1.077	39	3.910	42	4.211	32.99	36.93	37.72	40.87	43.23	44.80	48.74	49.53	53.62	56.61	58.19	64.49	72.36	80.24	81.81
1.079	38	3.810	41	4.110	33.15	37.08	37.87	41.02	43.38	44.96	48.90	49.68	53.78	56.77	58.34	64.64	72.52	80.39	81.97
1.080	25	2.506	27	2.707	35.28	39.21	40.00	43.15	45.51	47.09	51.03	51.81	55.91	58.90	60.47	66.77	74.65	82.52	84.10
1.081	37	3.709	40	4.010	33.31	37.24	38.03	41.18	43.54	45.12	49.06	49.84	53.94	56.93	58.50	64.80	72.68	80.55	82.13
Length factor*					**1.22**	**1.26**	**1.26**	**1.29**	**1.31**	**1.32**	**1.35**	**1.36**	**1.38**	**1.40**	**1.41**	**1.45**	**1.49**	**1.52**	**1.53**

* The length correction factor must be used to determine the proper belt width.

Selection program available online at ptwizard.com and passport.baldor.com

HT500 selection table – 8mm pitch HT500 belts

Speed ratio	Sprocket combinations: Driver No. of teeth	Driver Pitch dia. inches	Driven No. of teeth	Driven Pitch dia. inches	Center distance, inches: 640-8MX	720-8MX	800-8MX	896-8MX	960-8MX	1000-8MX	1040-8MX	1120-8MX	1200-8MX	1224-8MX	1280-8MX	1440-8MX	1600-8MX	1760-8MX	1792-8MX
Length factor*					**0.79**	**0.83**	**0.87**	**0.91**	**0.94**	**0.96**	**0.97**	**1.00**	**1.03**	**1.03**	**1.05**	**1.10**	**1.14**	**1.17**	**1.18**
1.083	36	3.609	39	3.910	6.69	8.27	9.84	11.73	12.99	13.78	14.56	16.14	17.71	18.19	19.29	22.44	25.59	28.74	29.37
1.086	35	3.509	38	3.810	6.85	8.43	10.00	11.89	13.15	13.94	14.72	16.30	17.87	18.35	19.45	22.60	25.75	28.90	29.53
1.088	34	3.409	37	3.709	7.01	8.58	10.16	12.05	13.31	14.09	14.88	16.45	18.03	18.50	19.60	22.75	25.90	29.05	29.68
1.091	33	3.308	36	3.609	7.17	8.74	10.32	12.21	13.47	14.25	15.04	16.61	18.19	18.66	19.76	22.91	26.06	29.21	29.84
1.094	32	3.208	35	3.509	7.32	8.90	10.47	12.36	13.62	14.41	15.19	16.77	18.34	18.82	19.92	23.07	26.22	29.37	30.00
1.097	31	3.108	34	3.409	7.48	9.06	10.63	12.52	13.78	14.57	15.35	16.93	18.50	18.98	20.08	23.23	26.38	29.53	30.16
1.098	41	4.110	45	4.511	5.83	7.40	8.98	10.87	12.13	12.91	13.70	15.27	16.85	17.32	18.42	21.57	24.72	27.87	28.50
1.100	30	3.008	33	3.308	7.64	9.21	10.79	12.68	13.94	14.72	15.51	17.08	18.66	19.13	20.23	23.38	26.53	29.68	30.31
1.103	29	2.907	32	3.208	7.80	9.37	10.95	12.84	14.10	14.88	15.67	17.24	18.82	19.29	20.39	23.54	26.69	29.84	30.47
1.104	48	4.812	53	5.314		6.22	7.79	9.68	10.94	11.73	12.51	14.09	15.67	16.14	17.24	20.39	23.54	26.69	27.32
1.105	38	3.810	42	4.211	6.30	7.87	9.45	11.34	12.60	13.38	14.17	15.74	17.32	17.79	18.89	22.04	25.19	28.34	28.97
1.107	28	2.807	31	3.108	7.95	9.53	11.10	12.99	14.25	15.04	15.82	17.40	18.97	19.45	20.55	23.70	26.85	30.00	30.63
1.108	37	3.709	41	4.110	6.46	8.03	9.61	11.50	12.76	13.54	14.33	15.90	17.48	17.95	19.05	22.20	25.35	28.50	29.13
1.111	27	2.707	30	3.008	8.11	9.69	11.26	13.15	14.41	15.20	15.98	17.56	19.13	19.61	20.71	23.86	27.01	30.16	30.79
1.111	36	3.609	40	4.010	6.61	8.19	9.76	11.65	12.91	13.70	14.48	16.06	17.63	18.11	19.21	22.36	25.51	28.66	29.29
1.111	45	4.511	50	5.013		6.69	8.27	10.16	11.42	12.20	12.99	14.56	16.14	16.61	17.71	20.86	24.01	27.16	27.79
1.114	35	3.509	39	3.910	6.77	8.35	9.92	11.81	13.07	13.86	14.64	16.22	17.79	18.27	19.37	22.52	25.67	28.82	29.45
1.115	26	2.607	29	2.907	8.27	9.84	11.42	13.31	14.57	15.35	16.14	17.71	19.29	19.76	20.86	24.01	27.16	30.31	30.94
1.117	60	6.015	67	6.717				7.63	8.89	9.68	10.46	12.04	13.62	14.09	15.19	18.34	21.49	24.64	25.27
1.118	34	3.409	38	3.810	6.93	8.50	10.08	11.97	13.23	14.01	14.80	16.37	17.95	18.42	19.52	22.67	25.82	28.97	29.60
1.119	67	6.717	75	7.519					7.71	8.49	9.28	10.86	12.43	12.91	14.01	17.16	20.31	23.46	24.09
1.120	25	2.506	28	2.807	8.43	10.00	11.58	13.47	14.73	15.51	16.30	17.87	19.45	19.92	21.02	24.17	27.32	30.47	31.10
1.120	50	5.013	56	5.614		5.82	7.40	9.29	10.55	11.33	12.12	13.70	15.27	15.75	16.85	20.00	23.15	26.30	26.93
1.121	33	3.308	37	3.709	7.09	8.66	10.24	12.13	13.39	14.17	14.96	16.53	18.11	18.58	19.68	22.83	25.98	29.13	29.76
1.125	32	3.208	36	3.609	7.24	8.82	10.39	12.28	13.54	14.33	15.11	16.69	18.26	18.74	19.84	22.99	26.14	29.29	29.92
1.125	40	4.010	45	4.511	5.90	7.48	9.05	10.94	12.21	12.99	13.78	15.35	16.93	17.40	18.50	21.65	24.80	27.95	28.58
1.125	56	5.614	63	6.316				8.26	9.52	10.31	11.09	12.67	14.25	14.72	15.82	18.97	22.12	25.27	25.90
1.125	80	8.020	90	9.023									10.22	10.70	11.80	14.95	18.10	21.25	21.88
1.127	63	6.316	71	7.118					8.34	9.13	9.91	11.49	13.06	13.54	14.64	17.79	20.94	24.09	24.72
1.127	71	7.118	80	8.020							8.57	10.15	11.72	12.20	13.30	16.45	19.60	22.75	23.38
1.129	31	3.108	35	3.509	7.40	8.98	10.55	12.44	13.70	14.49	15.27	16.85	18.42	18.90	20.00	23.15	26.30	29.45	30.08
1.132	53	5.314	60	6.015			6.84	8.74	10.00	10.78	11.57	13.14	14.72	15.19	16.29	19.44	22.59	25.74	26.37
1.133	30	3.008	34	3.409	7.56	9.13	10.71	12.60	13.86	14.64	15.43	17.00	18.58	19.05	20.15	23.30	26.45	29.60	30.23
1.135	37	3.709	42	4.211	6.37	7.95	9.53	11.42	12.68	13.46	14.25	15.82	17.40	17.87	18.97	22.12	25.27	28.42	29.05
1.136	22	2.206	25	2.506	8.90	10.47	12.05	13.94	15.20	15.98	16.77	18.34	19.92	20.39	21.49	24.64	27.79	30.94	31.57
1.138	29	2.907	33	3.308	7.72	9.29	10.87	12.76	14.02	14.80	15.59	17.16	18.74	19.21	20.31	23.46	26.61	29.76	30.39
1.139	36	3.609	41	4.110	6.53	8.11	9.68	11.57	12.84	13.62	14.41	15.98	17.56	18.03	19.13	22.28	25.43	28.58	29.21
1.143	28	2.807	32	3.208	7.87	9.45	11.02	12.91	14.17	14.96	15.74	17.32	18.89	19.37	20.47	23.62	26.77	29.92	30.55
1.143	35	3.509	40	4.010	6.69	8.27	9.84	11.73	12.99	13.78	14.56	16.14	17.71	18.19	19.29	22.44	25.59	28.74	29.37
1.143	42	4.211	48	4.812	5.51	7.08	8.66	10.55	11.81	12.59	13.38	14.96	16.53	17.01	18.11	21.26	24.41	27.56	28.19
1.147	34	3.409	39	3.910	6.85	8.42	10.00	11.89	13.15	13.93	14.72	16.29	17.87	18.34	19.45	22.60	25.75	28.90	29.53
1.148	27	2.707	31	3.108	8.03	9.61	11.18	13.07	14.33	15.12	15.90	17.48	19.05	19.53	20.63	23.78	26.93	30.08	30.71
1.152	33	3.308	38	3.810	7.01	8.58	10.16	12.05	13.31	14.09	14.88	16.45	18.03	18.50	19.60	22.75	25.90	29.05	29.68
1.154	26	2.607	30	3.008	8.19	9.76	11.34	13.23	14.49	15.27	16.06	17.63	19.21	19.68	20.78	23.93	27.08	30.23	30.86
1.154	39	3.910	45	4.511	5.98	7.56	9.13	11.02	12.28	13.07	13.85	15.43	17.00	17.48	18.58	21.73	24.88	28.03	28.66
1.156	32	3.208	37	3.709	7.16	8.74	10.31	12.20	13.47	14.25	15.04	16.61	18.19	18.66	19.76	22.91	26.06	29.21	29.84
1.160	25	2.506	29	2.907	8.35	9.92	11.50	13.39	14.65	15.43	16.22	17.79	19.37	19.84	20.94	24.09	27.24	30.39	31.02
1.161	31	3.108	36	3.609	7.32	8.90	10.47	12.36	13.62	14.41	15.19	16.77	18.34	18.82	19.92	23.07	26.22	29.37	30.00
1.167	30	3.008	35	3.509	7.48	9.05	10.63	12.52	13.78	14.56	15.35	16.92	18.50	18.97	20.07	23.23	26.38	29.53	30.16
1.167	36	3.609	42	4.211	6.45	8.03	9.60	11.49	12.75	13.54	14.33	15.90	17.48	17.95	19.05	22.20	25.35	28.50	29.13
1.167	48	4.812	56	5.614		5.97	7.55	9.44	10.70	11.49	12.27	13.85	15.43	15.90	17.00	20.15	23.30	26.45	27.08
1.171	35	3.509	41	4.110	6.61	8.19	9.76	11.65	12.91	13.70	14.48	16.06	17.63	18.11	19.21	22.36	25.51	28.66	29.29
1.171	41	4.110	48	4.812	5.58	7.16	8.74	10.63	11.89	12.67	13.46	15.03	16.61	17.08	18.18	21.33	24.49	27.64	28.27
1.172	29	2.907	34	3.409	7.64	9.21	10.79	12.68	13.94	14.72	15.51	17.08	18.66	19.13	20.23	23.38	26.53	29.68	30.31
1.176	34	3.409	40	4.010	6.77	8.34	9.92	11.81	13.07	13.85	14.64	16.22	17.79	18.27	19.37	22.52	25.67	28.82	29.45
1.178	45	4.511	53	5.314		6.45	8.02	9.92	11.18	11.96	12.75	14.32	15.90	16.37	17.47	20.62	23.78	26.93	27.56
1.179	28	2.807	33	3.308	7.79	9.37	10.94	12.83	14.10	14.88	15.67	17.24	18.82	19.29	20.39	23.54	26.69	29.84	30.47
1.182	22	2.206	26	2.607	8.82	10.39	11.97	13.86	15.12	15.90	16.69	18.26	19.84	20.31	21.41	24.56	27.71	30.86	31.49
1.182	33	3.308	39	3.910	6.92	8.50	10.08	11.97	13.23	14.01	14.80	16.37	17.95	18.42	19.52	22.67	25.82	28.97	29.60
1.183	60	6.015	71	7.118				7.30	8.57	9.35	10.14	11.72	13.29	13.77	14.87	18.02	21.17	24.32	24.95
1.184	38	3.810	45	4.511	6.05	7.63	9.21	11.10	12.36	13.15	13.93	15.51	17.08	17.56	18.66	21.81	24.96	28.11	28.74
1.185	27	2.707	32	3.208	7.95	9.53	11.10	12.99	14.25	15.04	15.82	17.40	18.97	19.45	20.55	23.70	26.85	30.00	30.63
1.188	32	3.208	38	3.810	7.08	8.66	10.23	12.12	13.38	14.17	14.96	16.53	18.11	18.58	19.68	22.83	25.98	29.13	29.76
1.189	53	5.314	63	6.316			6.60	8.49	9.75	10.54	11.32	12.90	14.48	14.95	16.05	19.20	22.36	25.51	26.14
1.190	42	4.211	50	5.013	5.34	6.92	8.50	10.39	11.65	12.43	13.22	14.80	16.37	16.85	17.95	21.10	24.25	27.40	28.03
1.190	63	6.316	75	7.519					8.01	8.80	9.59	11.16	12.74	13.22	14.32	17.47	20.62	23.77	24.40
1.192	26	2.607	31	3.108	8.11	9.68	11.26	13.15	14.41	15.19	15.98	17.55	19.13	19.60	20.70	23.86	27.01	30.16	30.79
1.194	31	3.108	37	3.709	7.24	8.82	10.39	12.28	13.54	14.33	15.11	16.69	18.26	18.74	19.84	22.99	26.14	29.29	29.92
1.194	67	6.717	80	8.020						8.08	8.87	10.45	12.03	12.50	13.60	16.76	19.91	23.06	23.69
1.196	56	5.614	67	6.717				7.94	9.20	9.99	10.77	12.35	13.92	14.40	15.50	18.65	21.80	24.95	25.58
1.200	25	2.506	30	3.008	8.27	9.84	11.42	13.31	14.57	15.35	16.14	17.71	19.29	19.76	20.86	24.01	27.16	30.31	30.94
1.200	30	3.008	36	3.609	7.40	8.97	10.55	12.44	13.70	14.48	15.27	16.85	18.42	18.90	20.00	23.15	26.30	29.45	30.08
1.200	35	3.509	42	4.211	6.53	8.10	9.68	11.57	12.83	13.62	14.40	15.98	17.55	18.03	19.13	22.28	25.43	28.58	29.21
1.200	40	4.010	48	4.812	5.66	7.24	8.81	10.70	11.96	12.75	13.54	15.11	16.69	17.16	18.26	21.41	24.56	27.71	28.34
1.200	50	5.013	60	6.015			7.07	8.96	10.23	11.01	11.80	13.37	14.95	15.43	16.53	19.68	22.83	25.98	26.61
1.200	75	7.519	90	9.023								9.02	10.60	11.08	12.18	15.33	18.49	21.64	22.27
1.206	34	3.409	41	4.110	6.69	8.26	9.84	11.73	12.99	13.78	14.56	16.14	17.71	18.19	19.29	22.44	25.59	28.74	29.37
Length factor*					**0.79**	**0.83**	**0.87**	**0.91**	**0.94**	**0.96**	**0.97**	**1.00**	**1.03**	**1.03**	**1.05**	**1.10**	**1.14**	**1.17**	**1.18**

* The length correction factor must be used to determine the proper belt width.

Selection program available online at ptwizard.com and passport.baldor.com

HT500 selection table – 8mm pitch HT500 belts (continued)

Speed ratio	Sprocket combinations				Center distance, inches														
	Driver		Driven																
	No. of teeth	Pitch dia. inches	No. of teeth	Pitch dia. inches	2000-8MX	2200-8MX	2240-8MX	2400-8MX	2520-8MX	2600-8MX	2800-8MX	2840-8MX	3048-8MX	3200-8MX	3280-8MX	3600-8MX	4000-8MX	4400-8MX	4480-8MX
Length factor*					**1.22**	**1.26**	**1.26**	**1.29**	**1.31**	**1.32**	**1.35**	**1.36**	**1.38**	**1.40**	**1.41**	**1.45**	**1.49**	**1.52**	**1.53**
1.083	36	3.609	39	3.910	33.46	37.40	38.19	41.34	43.70	45.27	49.21	50.00	54.09	57.08	58.66	64.96	72.83	80.71	82.28
1.086	35	3.509	38	3.810	33.62	37.56	38.35	41.50	43.86	45.43	49.37	50.16	54.25	57.24	58.82	65.12	72.99	80.87	82.44
1.088	34	3.409	37	3.709	33.78	37.71	38.50	41.65	44.01	45.59	49.53	50.31	54.41	57.40	58.97	65.27	73.15	81.02	82.60
1.091	33	3.308	36	3.609	33.94	37.87	38.66	41.81	44.17	45.75	49.69	50.47	54.57	57.56	59.13	65.43	73.31	81.18	82.76
1.094	32	3.208	35	3.509	34.09	38.03	38.82	41.97	44.33	45.90	49.84	50.63	54.72	57.71	59.29	65.59	73.46	81.34	82.91
1.097	31	3.108	34	3.409	34.25	38.19	38.98	42.13	44.49	46.06	50.00	50.79	54.88	57.87	59.45	65.75	73.62	81.50	83.07
1.098	41	4.110	45	4.511	32.60	36.53	37.32	40.47	42.83	44.41	48.35	49.13	53.23	56.22	57.79	64.09	71.97	79.84	81.42
1.100	30	3.008	33	3.308	34.41	38.34	39.13	42.28	44.64	46.22	50.16	50.94	55.04	58.03	59.60	65.90	73.78	81.65	83.23
1.103	29	2.907	32	3.208	34.57	38.50	39.29	42.44	44.80	46.38	50.32	51.10	55.20	58.19	59.76	66.06	73.94	81.81	83.39
1.104	48	4.812	53	5.314	31.42	35.35	36.14	39.29	41.65	43.23	47.17	47.95	52.05	55.04	56.61	62.91	70.79	78.66	80.24
1.105	38	3.810	42	4.211	33.07	37.00	37.79	40.94	43.30	44.88	48.82	49.60	53.70	56.69	58.26	64.57	72.44	80.32	81.89
1.107	28	2.807	31	3.108	34.72	38.66	39.45	42.60	44.96	46.53	50.47	51.26	55.35	58.34	59.92	66.22	74.09	81.97	83.54
1.108	37	3.709	41	4.110	33.23	37.16	37.95	41.10	43.46	45.04	48.98	49.76	53.86	56.85	58.42	64.72	72.60	80.47	82.05
1.111	27	2.707	30	3.008	34.88	38.82	39.61	42.76	45.12	46.69	50.63	51.42	55.51	58.50	60.08	66.38	74.25	82.13	83.70
1.111	36	3.609	40	4.010	33.39	37.32	38.11	41.26	43.62	45.20	49.14	49.92	54.02	57.01	58.58	64.88	72.76	80.63	82.21
1.111	45	4.511	50	5.013	31.89	35.82	36.61	39.76	42.12	43.70	47.64	48.42	52.52	55.51	57.08	63.38	71.26	79.13	80.71
1.114	35	3.509	39	3.910	33.54	37.48	38.27	41.42	43.78	45.35	49.29	50.08	54.17	57.16	58.74	65.04	72.91	80.79	82.36
1.115	26	2.607	29	2.907	35.04	38.97	39.76	42.91	45.27	46.85	50.79	51.57	55.67	58.66	60.23	66.53	74.41	82.28	83.86
1.117	60	6.015	67	6.717	29.37	33.30	34.09	37.24	39.60	41.18	45.12	45.90	50.00	52.99	54.56	60.86	68.74	76.61	78.19
1.118	34	3.409	38	3.810	33.70	37.63	38.42	41.57	43.93	45.51	49.45	50.23	54.33	57.32	58.89	65.19	73.07	80.94	82.52
1.119	67	6.717	75	7.519	28.19	32.12	32.91	36.06	38.42	40.00	43.94	44.72	48.82	51.81	53.38	59.68	67.56	75.43	77.01
1.120	25	2.506	28	2.807	35.20	39.13	39.92	43.07	45.43	47.01	50.95	51.73	55.83	58.82	60.39	66.69	74.57	82.44	84.02
1.120	50	5.013	56	5.614	31.02	34.96	35.75	38.90	41.26	42.83	46.77	47.56	51.65	54.64	56.22	62.52	70.39	78.27	79.84
1.121	33	3.308	37	3.709	33.86	37.79	38.58	41.73	44.09	45.67	49.61	50.39	54.49	57.48	59.05	65.35	73.23	81.10	82.68
1.125	32	3.208	36	3.609	34.02	37.95	38.74	41.89	44.25	45.83	49.77	50.55	54.65	57.64	59.21	65.51	73.39	81.26	82.84
1.125	40	4.010	45	4.511	32.68	36.61	37.40	40.55	42.91	44.49	48.43	49.21	53.31	56.30	57.87	64.17	72.05	79.92	81.50
1.125	56	5.614	63	6.316	30.00	33.93	34.72	37.87	40.23	41.81	45.75	46.53	50.63	53.62	55.19	61.49	69.37	77.24	78.82
1.125	80	8.020	90	9.023	25.98	29.92	30.71	33.86	36.22	37.79	41.73	42.52	46.61	49.60	51.18	57.48	65.35	73.23	74.80
1.127	63	6.316	71	7.118	28.82	32.75	33.54	36.69	39.05	40.63	44.57	45.35	49.45	52.44	54.01	60.31	68.19	76.06	77.64
1.127	71	7.118	80	8.020	27.48	31.41	32.20	35.35	37.71	39.29	43.23	44.01	48.11	51.10	52.67	58.97	66.85	74.72	76.30
1.129	31	3.108	35	3.509	34.17	38.11	38.90	42.05	44.41	45.98	49.92	50.71	54.80	57.79	59.37	65.67	73.54	81.42	82.99
1.132	53	5.314	60	6.015	30.47	34.41	35.20	38.35	40.71	42.28	46.22	47.01	51.10	54.09	55.67	61.97	69.84	77.72	79.29
1.133	30	3.008	34	3.409	34.33	38.26	39.05	42.20	44.56	46.14	50.08	50.86	54.96	57.95	59.52	65.82	73.70	81.57	83.15
1.135	37	3.709	42	4.211	33.15	37.08	37.87	41.02	43.38	44.96	48.90	49.68	53.78	56.77	58.34	64.64	72.52	80.39	81.97
1.136	22	2.206	25	2.506	35.67	39.60	40.39	43.54	45.90	47.48	51.42	52.20	56.30	59.29	60.86	67.16	75.04	82.91	84.49
1.138	29	2.907	33	3.308	34.49	38.42	39.21	42.36	44.72	46.30	50.24	51.02	55.12	58.11	59.68	65.98	73.86	81.73	83.31
1.139	36	3.609	41	4.110	33.31	37.24	38.03	41.18	43.54	45.12	49.06	49.84	53.94	56.93	58.50	64.80	72.68	80.55	82.13
1.143	28	2.807	32	3.208	34.65	38.58	39.37	42.52	44.88	46.46	50.40	51.18	55.28	58.27	59.84	66.14	74.02	81.89	83.47
1.143	35	3.509	40	4.010	33.46	37.40	38.19	41.34	43.70	45.27	49.21	50.00	54.09	57.08	58.66	64.96	72.83	80.71	82.28
1.143	42	4.211	48	4.812	32.28	36.22	37.01	40.16	42.52	44.09	48.03	48.82	52.91	55.90	57.48	63.78	71.65	79.53	81.10
1.147	34	3.409	39	3.910	33.62	37.56	38.35	41.50	43.86	45.43	49.37	50.16	54.25	57.24	58.82	65.12	72.99	80.87	82.44
1.148	27	2.707	31	3.108	34.80	38.74	39.53	42.68	45.04	46.61	50.55	51.34	55.43	58.42	60.00	66.30	74.17	82.05	83.62
1.152	33	3.308	38	3.810	33.78	37.71	38.50	41.65	44.01	45.59	49.53	50.31	54.41	57.40	58.97	65.27	73.15	81.02	82.60
1.154	26	2.607	30	3.008	34.96	38.89	39.68	42.83	45.19	46.77	50.71	51.49	55.59	58.58	60.15	66.45	74.33	82.20	83.78
1.154	39	3.910	45	4.511	32.75	36.69	37.48	40.63	42.99	44.57	48.51	49.29	53.39	56.38	57.95	64.25	72.13	80.00	81.58
1.156	32	3.208	37	3.709	33.94	37.87	38.66	41.81	44.17	45.75	49.69	50.47	54.57	57.56	59.13	65.43	73.31	81.18	82.76
1.160	25	2.506	29	2.907	35.12	39.05	39.84	42.99	45.35	46.93	50.87	51.65	55.75	58.74	60.31	66.61	74.49	82.36	83.94
1.161	31	3.108	36	3.609	34.09	38.03	38.82	41.97	44.33	45.90	49.84	50.63	54.72	57.71	59.29	65.59	73.46	81.34	82.91
1.167	30	3.008	35	3.509	34.25	38.19	38.98	42.13	44.49	46.06	50.00	50.79	54.88	57.87	59.45	65.75	73.62	81.50	83.07
1.167	36	3.609	42	4.211	33.23	37.16	37.95	41.10	43.46	45.04	48.98	49.76	53.86	56.85	58.42	64.72	72.60	80.47	82.05
1.167	48	4.812	56	5.614	31.18	35.11	35.90	39.05	41.41	42.99	46.93	47.71	51.81	54.80	56.38	62.68	70.55	78.43	80.00
1.171	35	3.509	41	4.110	33.38	37.32	38.11	41.26	43.62	45.20	49.14	49.92	54.02	57.01	58.58	64.88	72.76	80.63	82.21
1.171	41	4.110	48	4.812	32.36	36.30	37.09	40.24	42.60	44.17	48.11	48.90	52.99	55.98	57.56	63.86	71.73	79.61	81.18
1.172	29	2.907	34	3.409	34.41	38.34	39.13	42.28	44.64	46.22	50.16	50.94	55.04	58.03	59.60	65.90	73.78	81.65	83.23
1.176	34	3.409	40	4.010	33.54	37.48	38.27	41.42	43.78	45.35	49.29	50.08	54.17	57.16	58.74	65.04	72.91	80.79	82.36
1.178	45	4.511	53	5.314	31.65	35.59	36.38	39.53	41.89	43.46	47.40	48.19	52.28	55.27	56.85	63.15	71.02	78.90	80.47
1.179	28	2.807	33	3.308	34.57	38.50	39.29	42.44	44.80	46.38	50.32	51.10	55.20	58.19	59.76	66.06	73.94	81.81	83.39
1.182	22	2.206	26	2.607	35.59	39.52	40.31	43.46	45.82	47.40	51.34	52.12	56.22	59.21	60.78	67.08	74.96	82.83	84.41
1.182	33	3.308	39	3.910	33.70	37.63	38.42	41.57	43.93	45.51	49.45	50.24	54.33	57.32	58.90	65.20	73.07	80.95	82.52
1.183	60	6.015	71	7.118	29.05	32.99	33.78	36.93	39.29	40.86	44.80	45.59	49.68	52.67	54.25	60.55	68.42	76.30	77.87
1.184	38	3.810	45	4.511	32.83	36.77	37.56	40.71	43.07	44.64	48.58	49.37	53.46	56.45	58.03	64.33	72.20	80.08	81.65
1.185	27	2.707	32	3.208	34.72	38.66	39.45	42.60	44.96	46.53	50.47	51.26	55.35	58.34	59.92	66.22	74.09	81.97	83.54
1.188	32	3.208	38	3.810	33.86	37.79	38.58	41.73	44.09	45.67	49.61	50.39	54.49	57.48	59.05	65.35	73.23	81.10	82.68
1.189	53	5.314	63	6.316	30.23	34.17	34.96	38.11	40.47	42.04	45.98	46.77	50.86	53.85	55.43	61.73	69.60	77.48	79.05
1.190	42	4.211	50	5.013	32.12	36.06	36.85	40.00	42.36	43.93	47.87	48.66	52.75	55.74	57.32	63.62	71.49	79.37	80.94
1.190	63	6.316	75	7.519	28.50	32.43	33.22	36.37	38.73	40.31	44.25	45.03	49.13	52.12	53.70	60.00	67.87	75.75	77.32
1.192	26	2.607	31	3.108	34.88	38.82	39.61	42.76	45.12	46.69	50.63	51.42	55.51	58.50	60.08	66.38	74.25	82.13	83.70
1.194	31	3.108	37	3.709	34.01	37.95	38.74	41.89	44.25	45.82	49.77	50.55	54.65	57.64	59.21	65.51	73.39	81.26	82.84
1.194	67	6.717	80	8.020	27.79	31.72	32.51	35.66	38.03	39.60	43.54	44.33	48.42	51.41	52.99	59.29	67.16	75.04	76.61
1.196	56	5.614	67	6.717	29.68	33.62	34.41	37.56	39.92	41.49	45.43	46.22	50.31	53.30	54.88	61.18	69.05	76.93	78.50
1.200	25	2.506	30	3.008	35.04	38.97	39.76	42.91	45.27	46.85	50.79	51.57	55.67	58.66	60.23	66.53	74.41	82.28	83.86
1.200	30	3.008	36	3.609	34.17	38.11	38.90	42.05	44.41	45.98	49.92	50.71	54.80	57.79	59.37	65.67	73.54	81.42	82.99
1.200	35	3.509	42	4.211	33.30	37.24	38.03	41.18	43.54	45.12	49.06	49.84	53.94	56.93	58.50	64.80	72.68	80.55	82.13
1.200	40	4.010	48	4.812	32.44	36.37	37.16	40.31	42.67	44.25	48.19	48.97	53.07	56.06	57.63	63.93	71.81	79.69	81.26
1.200	50	5.013	60	6.015	30.70	34.64	35.43	38.58	40.94	42.52	46.46	47.24	51.34	54.33	55.90	62.20	70.08	77.95	79.53
1.200	75	7.519	90	9.023	26.37	30.30	31.09	34.24	36.61	38.18	42.12	42.91	47.00	49.99	51.57	57.87	65.74	73.62	75.19
1.206	34	3.409	41	4.110	33.46	37.40	38.19	41.34	43.70	45.27	49.21	50.00	54.09	57.08	58.66	64.96	72.83	80.71	82.28
Length factor*					**1.22**	**1.26**	**1.26**	**1.29**	**1.31**	**1.32**	**1.35**	**1.36**	**1.38**	**1.40**	**1.41**	**1.45**	**1.49**	**1.52**	**1.53**

Center distance is greater than eight times the small sprocket and the large sprocket is not flanged. See Engineering Section for details.

* The length correction factor must be used to determine the proper belt width.

Selection program available online at ptwizard.com and passport.baldor.com

HT500 selection table – 8mm pitch HT500 belts

Speed ratio	Sprocket combinations				Center distance, inches														
	Driver		Driven																
	No. of teeth	Pitch dia. inches	No. of teeth	Pitch dia. inches	640-8MX	720-8MX	800-8MX	896-8MX	960-8MX	1000-8MX	1040-8MX	1120-8MX	1200-8MX	1224-8MX	1280-8MX	1440-8MX	1600-8MX	1760-8MX	1792-8MX
Length factor*					**0.79**	**0.83**	**0.87**	**0.91**	**0.94**	**0.96**	**0.97**	**1.00**	**1.03**	**1.03**	**1.05**	**1.10**	**1.14**	**1.17**	**1.18**
1.207	29	2.907	35	3.509	7.55	9.13	10.71	12.60	13.86	14.64	15.43	17.00	18.58	19.05	20.15	23.30	26.45	29.60	30.23
1.212	33	3.308	40	4.010	6.84	8.42	10.00	11.89	13.15	13.93	14.72	16.29	17.87	18.34	19.44	22.59	25.75	28.90	29.53
1.214	28	2.807	34	3.409	7.71	9.29	10.86	12.75	14.01	14.80	15.59	17.16	18.74	19.21	20.31	23.46	26.61	29.76	30.39
1.216	37	3.709	45	4.511	6.13	7.71	9.29	11.18	12.44	13.22	14.01	15.58	17.16	17.63	18.73	21.89	25.04	28.19	28.82
1.219	32	3.208	39	3.910	7.00	8.58	10.15	12.04	13.30	14.09	14.88	16.45	18.03	18.50	19.60	22.75	25.90	29.05	29.68
1.220	41	4.110	50	5.013	5.42	7.00	8.57	10.47	11.73	12.51	13.30	14.87	16.45	16.92	18.02	21.17	24.33	27.48	28.11
1.222	27	2.707	33	3.308	7.87	9.45	11.02	12.91	14.17	14.96	15.74	17.32	18.89	19.37	20.47	23.62	26.77	29.92	30.55
1.226	31	3.108	38	3.810	7.16	8.73	10.31	12.20	13.46	14.25	15.03	16.61	18.18	18.66	19.76	22.91	26.06	29.21	29.84
1.227	22	2.206	27	2.707	8.74	10.31	11.89	13.78	15.04	15.82	16.61	18.18	19.76	20.23	21.33	24.49	27.64	30.79	31.42
1.231	26	2.607	32	3.208	8.03	9.60	11.18	13.07	14.33	15.11	15.90	17.48	19.05	19.53	20.63	23.78	26.93	30.08	30.71
1.231	39	3.910	48	4.812	5.73	7.31	8.89	10.78	12.04	12.83	13.61	15.19	16.76	17.24	18.34	21.49	24.64	27.79	28.42
1.233	30	3.008	37	3.709	7.32	8.89	10.47	12.36	13.62	14.41	15.19	16.77	18.34	18.82	19.92	23.07	26.22	29.37	30.00
1.235	34	3.409	42	4.211	6.60	8.18	9.76	11.65	12.91	13.69	14.48	16.06	17.63	18.11	19.21	22.36	25.51	28.66	29.29
1.240	25	2.506	31	3.108	8.19	9.76	11.34	13.23	14.49	15.27	16.06	17.63	19.21	19.68	20.78	23.93	27.08	30.23	30.86
1.241	29	2.907	36	3.609	7.47	9.05	10.63	12.52	13.78	14.56	15.35	16.92	18.50	18.97	20.07	23.22	26.38	29.53	30.16
1.242	33	3.308	41	4.110	6.76	8.34	9.92	11.81	13.07	13.85	14.64	16.21	17.79	18.26	19.36	22.52	25.67	28.82	29.45
1.244	45	4.511	56	5.614		6.20	7.78	9.67	10.93	11.72	12.51	14.08	15.66	16.13	17.23	20.39	23.54	26.69	27.32
1.250	28	2.807	35	3.509	7.63	9.21	10.78	12.67	13.94	14.72	15.51	17.08	18.66	19.13	20.23	23.38	26.53	29.68	30.31
1.250	32	3.208	40	4.010	6.92	8.50	10.07	11.96	13.22	14.01	14.80	16.37	17.95	18.42	19.52	22.67	25.82	28.97	29.60
1.250	36	3.609	45	4.511	6.21	7.78	9.36	11.25	12.51	13.30	14.09	15.66	17.24	17.71	18.81	21.96	25.11	28.26	28.89
1.250	40	4.010	50	5.013	5.49	7.07	8.65	10.54	11.80	12.59	13.37	14.95	16.53	17.00	18.10	21.25	24.40	27.55	28.18
1.250	48	4.812	60	6.015			7.22	9.12	10.38	11.17	11.95	13.53	15.10	15.58	16.68	19.83	22.98	26.13	26.76
1.250	60	6.015	75	7.519					8.24	9.02	9.81	11.39	12.97	13.44	14.55	17.70	20.85	24.00	24.63
1.258	31	3.108	39	3.910	7.08	8.65	10.23	12.12	13.38	14.17	14.95	16.53	18.10	18.58	19.68	22.83	25.98	29.13	29.76
1.259	27	2.707	34	3.409	7.79	9.36	10.94	12.83	14.09	14.88	15.66	17.24	18.81	19.29	20.39	23.54	26.69	29.84	30.47
1.260	50	5.013	63	6.316			6.82	8.72	9.98	10.77	11.55	13.13	14.71	15.18	16.28	19.44	22.59	25.74	26.37
1.262	42	4.211	53	5.314		6.67	8.25	10.14	11.41	12.19	12.98	14.55	16.13	16.60	17.71	20.86	24.01	27.16	27.79
1.263	38	3.810	48	4.812	5.81	7.39	8.96	10.86	12.12	12.90	13.69	15.27	16.84	17.32	18.42	21.57	24.72	27.87	28.50
1.264	53	5.314	67	6.717				8.16	9.42	10.21	11.00	12.58	14.15	14.63	15.73	18.88	22.03	25.19	25.82
1.267	30	3.008	38	3.810	7.23	8.81	10.39	12.28	13.54	14.32	15.11	16.69	18.26	18.74	19.84	22.99	26.14	29.29	29.92
1.268	56	5.614	71	7.118				7.60	8.87	9.66	10.44	12.02	13.60	14.08	15.18	18.33	21.48	24.63	25.26
1.268	71	7.118	90	9.023								9.32	10.90	11.38	12.48	15.64	18.79	21.95	22.58
1.269	26	2.607	33	3.308	7.95	9.52	11.10	12.99	14.25	15.04	15.82	17.40	18.97	19.45	20.55	23.70	26.85	30.00	30.63
1.270	63	6.316	80	8.020						8.38	9.17	10.75	12.33	12.81	13.91	17.06	20.22	23.37	24.00
1.273	22	2.206	28	2.807	8.66	10.23	11.81	13.70	14.96	15.74	16.53	18.11	19.68	20.16	21.26	24.41	27.56	30.71	31.34
1.273	33	3.308	42	4.211	6.68	8.26	9.83	11.73	12.99	13.77	14.56	16.13	17.71	18.18	19.28	22.44	25.59	28.74	29.37
1.276	29	2.907	37	3.709	7.39	8.97	10.55	12.44	13.70	14.48	15.27	16.84	18.42	18.89	19.99	23.15	26.30	29.45	30.08
1.280	25	2.506	32	3.208	8.10	9.68	11.26	13.15	14.41	15.19	15.98	17.55	19.13	19.60	20.70	23.85	27.00	30.16	30.79
1.281	32	3.208	41	4.110	6.84	8.42	9.99	11.88	13.14	13.93	14.72	16.29	17.87	18.34	19.44	22.59	25.74	28.89	29.52
1.282	39	3.910	50	5.013	5.56	7.15	8.72	10.62	11.88	12.66	13.45	15.03	16.60	17.08	18.18	21.33	24.48	27.63	28.26
1.286	28	2.807	36	3.609	7.55	9.13	10.70	12.59	13.86	14.64	15.43	17.00	18.58	19.05	20.15	23.30	26.45	29.60	30.23
1.286	35	3.509	45	4.511	6.28	7.86	9.44	11.33	12.59	13.38	14.16	15.74	17.31	17.79	18.89	22.04	25.19	28.34	28.97
1.290	31	3.108	40	4.010	6.99	8.57	10.15	12.04	13.30	14.09	14.87	16.45	18.02	18.50	19.60	22.75	25.90	29.05	29.68
1.293	41	4.110	53	5.314		6.75	8.33	10.22	11.48	12.27	13.05	14.63	16.21	16.68	17.78	20.93	24.09	27.24	27.87
1.296	27	2.707	35	3.509	7.71	9.28	10.86	12.75	14.01	14.80	15.58	17.16	18.73	19.21	20.31	23.46	26.61	29.76	30.39
1.297	37	3.709	48	4.812	5.88	7.46	9.04	10.93	12.20	12.98	13.77	15.34	16.92	17.39	18.49	21.65	24.80	27.95	28.58
1.300	30	3.008	39	3.910	7.15	8.73	10.31	12.20	13.46	14.24	15.03	16.61	18.18	18.66	19.76	22.91	26.06	29.21	29.84
1.308	26	2.607	34	3.409	7.86	9.44	11.02	12.91	14.17	14.95	15.74	17.32	18.89	19.37	20.47	23.62	26.77	29.92	30.55
1.310	29	2.907	38	3.810	7.31	8.89	10.46	12.36	13.62	14.40	15.19	16.76	18.34	18.81	19.91	23.07	26.22	29.37	30.00
1.313	32	3.208	42	4.211	6.75	8.33	9.91	11.80	13.06	13.85	14.63	16.21	17.79	18.26	19.36	22.51	25.66	28.81	29.44
1.313	48	4.812	63	6.316			6.97	8.87	10.13	10.92	11.71	13.28	14.86	15.34	16.44	19.59	22.74	25.89	26.52
1.316	38	3.810	50	5.013	5.64	7.22	8.80	10.69	11.96	12.74	13.53	15.10	16.68	17.15	18.26	21.41	24.56	27.71	28.34
1.318	22	2.206	29	2.907	8.58	10.15	11.73	13.62	14.88	15.67	16.45	18.03	19.60	20.08	21.18	24.33	27.48	30.63	31.26
1.320	25	2.506	33	3.308	8.02	9.60	11.18	13.07	14.33	15.11	15.90	17.47	19.05	19.52	20.62	23.78	26.93	30.08	30.71
1.321	28	2.807	37	3.709	7.47	9.05	10.62	12.51	13.77	14.56	15.35	16.92	18.50	18.97	20.07	23.22	26.37	29.52	30.15
1.323	31	3.108	41	4.110	6.91	8.49	10.07	11.96	13.22	14.01	14.79	16.37	17.94	18.42	19.52	22.67	25.82	28.97	29.60
1.324	34	3.409	45	4.511	6.36	7.94	9.51	11.41	12.67	13.45	14.24	15.82	17.39	17.87	18.97	22.12	25.27	28.42	29.05
1.325	40	4.010	53	5.314	5.24	6.82	8.40	10.30	11.56	12.34	13.13	14.71	16.28	16.76	17.86	21.01	24.16	27.31	27.94
1.333	27	2.707	36	3.609	7.63	9.20	10.78	12.67	13.93	14.72	15.50	17.08	18.65	19.13	20.23	23.38	26.53	29.68	30.31
1.333	30	3.008	40	4.010	7.07	8.65	10.23	12.12	13.38	14.16	14.95	16.53	18.10	18.58	19.68	22.83	25.98	29.13	29.76
1.333	36	3.609	48	4.812	5.96	7.54	9.12	11.01	12.27	13.06	13.84	15.42	17.00	17.47	18.57	21.72	24.87	28.02	28.65
1.333	42	4.211	56	5.614		6.42	8.00	9.90	11.16	11.95	12.73	14.31	15.89	16.36	17.46	20.62	23.77	26.92	27.55
1.333	45	4.511	60	6.015		5.86	7.44	9.34	10.61	11.39	12.18	13.76	15.33	15.81	16.91	20.06	23.22	26.37	27.00
1.333	60	6.015	80	8.020					7.81	8.60	9.39	10.98	12.56	13.03	14.14	17.29	20.45	23.60	24.23
1.339	56	5.614	75	7.519				7.26	8.53	9.32	10.11	11.69	13.27	13.75	14.85	18.01	21.16	24.31	24.94
1.340	50	5.013	67	6.717			6.48	8.38	9.65	10.44	11.22	12.80	14.38	14.86	15.96	19.11	22.27	25.42	26.05
1.340	53	5.314	71	7.118				7.82	9.09	9.88	10.67	12.25	13.83	14.30	15.40	18.56	21.71	24.86	25.49
1.343	67	6.717	90	9.023								9.61	11.20	11.68	12.78	15.94	19.10	22.25	22.88
1.345	29	2.907	39	3.910	7.23	8.81	10.38	12.28	13.54	14.32	15.11	16.68	18.26	18.73	19.83	22.99	26.14	29.29	29.92
1.346	26	2.607	35	3.509	7.78	9.36	10.94	12.83	14.09	14.87	15.66	17.24	18.81	19.29	20.39	23.54	26.69	29.84	30.47
1.351	37	3.709	50	5.013	5.71	7.30	8.88	10.77	12.03	12.82	13.60	15.18	16.76	17.23	18.33	21.48	24.64	27.79	28.42
1.355	31	3.108	42	4.211	6.83	8.41	9.99	11.88	13.14	13.93	14.71	16.29	17.86	18.34	19.44	22.59	25.74	28.89	29.52
1.357	28	2.807	38	3.810	7.39	8.96	10.54	12.43	13.69	14.48	15.26	16.84	18.42	18.89	19.99	23.14	26.29	29.44	30.07
1.359	39	3.910	53	5.314	5.31	6.89	8.48	10.37	11.63	12.42	13.21	14.78	16.36	16.84	17.94	21.09	24.24	27.39	28.02
1.360	25	2.506	34	3.409	7.94	9.52	11.10	12.99	14.25	15.03	15.82	17.39	18.97	19.44	20.54	23.70	26.85	30.00	30.63
1.364	22	2.206	30	3.008	8.50	10.07	11.65	13.54	14.80	15.58	16.37	17.95	19.52	20.00	21.10	24.25	27.40	30.55	31.18
1.364	33	3.308	45	4.511	6.43	8.01	9.59	11.48	12.74	13.53	14.32	15.89	17.47	17.94	19.04	22.20	25.35	28.50	29.13
Length factor*					**0.79**	**0.83**	**0.87**	**0.91**	**0.94**	**0.96**	**0.97**	**1.00**	**1.03**	**1.03**	**1.05**	**1.10**	**1.14**	**1.17**	**1.18**

* The length correction factor must be used to determine the proper belt width.

Selection program available online at ptwizard.com and passport.baldor.com

HT500 selection table – 8mm pitch HT500 belts (continued)

Speed ratio	Sprocket combinations				Center distance, inches														
	Driver		Driven																
	No. of teeth	Pitch dia. inches	No. of teeth	Pitch dia. inches	2000-8MX	2200-8MX	2240-8MX	2400-8MX	2520-8MX	2600-8MX	2800-8MX	2840-8MX	3048-8MX	3200-8MX	3280-8MX	3600-8MX	4000-8MX	4400-8MX	4480-8MX
Length factor*					**1.22**	**1.26**	**1.26**	**1.29**	**1.31**	**1.32**	**1.35**	**1.36**	**1.38**	**1.40**	**1.41**	**1.45**	**1.49**	**1.52**	**1.53**
1.207	29	2.907	35	3.509	34.33	38.26	39.05	42.20	44.56	46.14	50.08	50.86	54.96	57.95	59.53	65.83	73.70	81.58	83.15
1.212	33	3.308	40	4.010	33.62	37.56	38.35	41.50	43.86	45.43	49.37	50.16	54.25	57.24	58.82	65.12	72.99	80.87	82.44
1.214	28	2.807	34	3.409	34.49	38.42	39.21	42.36	44.72	46.30	50.24	51.02	55.12	58.11	59.68	65.98	73.86	81.73	83.31
1.216	37	3.709	45	4.511	32.91	36.85	37.64	40.79	43.15	44.72	48.66	49.45	53.54	56.53	58.11	64.41	72.28	80.16	81.73
1.219	32	3.208	39	3.910	33.78	37.71	38.50	41.65	44.01	45.59	49.53	50.31	54.41	57.40	58.97	65.27	73.15	81.02	82.60
1.220	41	4.110	50	5.013	32.20	36.14	36.93	40.08	42.44	44.01	47.95	48.74	52.83	55.82	57.40	63.70	71.57	79.45	81.02
1.222	27	2.707	33	3.308	34.64	38.58	39.37	42.52	44.88	46.45	50.39	51.18	55.28	58.27	59.84	66.14	74.02	81.89	83.47
1.226	31	3.108	38	3.810	33.93	37.87	38.66	41.81	44.17	45.75	49.69	50.47	54.57	57.56	59.13	65.43	73.31	81.18	82.76
1.227	22	2.206	27	2.707	35.51	39.45	40.24	43.39	45.75	47.32	51.26	52.05	56.14	59.13	60.71	67.01	74.88	82.76	84.33
1.231	26	2.607	32	3.208	34.80	38.74	39.53	42.68	45.04	46.61	50.55	51.34	55.43	58.42	60.00	66.30	74.17	82.05	83.62
1.231	39	3.910	48	4.812	32.52	36.45	37.24	40.39	42.75	44.33	48.27	49.05	53.15	56.14	57.71	64.01	71.89	79.76	81.34
1.233	30	3.008	37	3.709	34.09	38.03	38.82	41.97	44.33	45.90	49.84	50.63	54.72	57.71	59.29	65.59	73.46	81.34	82.91
1.235	34	3.409	42	4.211	33.38	37.32	38.11	41.26	43.62	45.19	49.13	49.92	54.01	57.00	58.58	64.88	72.75	80.63	82.20
1.240	25	2.506	31	3.108	34.96	38.89	39.68	42.83	45.19	46.77	50.71	51.49	55.59	58.58	60.16	66.46	74.33	82.21	83.78
1.241	29	2.907	36	3.609	34.25	38.19	38.98	42.13	44.49	46.06	50.00	50.79	54.88	57.87	59.45	65.75	73.62	81.50	83.07
1.242	33	3.308	41	4.110	33.54	37.48	38.27	41.42	43.78	45.35	49.29	50.08	54.17	57.16	58.74	65.04	72.91	80.79	82.36
1.244	45	4.511	56	5.614	31.41	35.35	36.14	39.29	41.65	43.22	47.16	47.95	52.04	55.04	56.61	62.91	70.79	78.66	80.24
1.250	28	2.807	35	3.509	34.41	38.34	39.13	42.28	44.64	46.22	50.16	50.94	55.04	58.03	59.60	65.90	73.78	81.65	83.23
1.250	32	3.208	40	4.010	33.70	37.63	38.42	41.57	43.93	45.51	49.45	50.23	54.33	57.32	58.89	65.19	73.07	80.95	82.52
1.250	36	3.609	45	4.511	32.99	36.92	37.71	40.87	43.23	44.80	48.74	49.53	53.62	56.61	58.19	64.49	72.36	80.24	81.81
1.250	40	4.010	50	5.013	32.28	36.21	37.00	40.16	42.52	44.09	48.03	48.82	52.91	55.90	57.48	63.78	71.65	79.53	81.10
1.250	48	4.812	60	6.015	30.86	34.80	35.59	38.74	41.10	42.67	46.61	47.40	51.49	54.48	56.06	62.36	70.23	78.11	79.68
1.250	60	6.015	75	7.519	28.73	32.67	33.46	36.61	38.97	40.54	44.48	45.27	49.36	52.36	53.93	60.23	68.11	75.98	77.56
1.258	31	3.108	39	3.910	33.86	37.79	38.58	41.73	44.09	45.67	49.61	50.39	54.49	57.48	59.05	65.35	73.23	81.10	82.68
1.259	27	2.707	34	3.409	34.56	38.50	39.29	42.44	44.80	46.38	50.32	51.10	55.20	58.19	59.76	66.06	73.94	81.81	83.39
1.260	50	5.013	63	6.316	30.47	34.40	35.19	38.34	40.70	42.28	46.22	47.00	51.10	54.09	55.66	61.96	69.84	77.71	79.29
1.262	42	4.211	53	5.314	31.88	35.82	36.61	39.76	42.12	43.70	47.64	48.42	52.52	55.51	57.08	63.38	71.26	79.13	80.71
1.263	38	3.810	48	4.812	32.59	36.53	37.32	40.47	42.83	44.41	48.35	49.13	53.23	56.22	57.79	64.09	71.97	79.84	81.42
1.264	53	5.314	67	6.717	29.91	33.85	34.64	37.79	40.15	41.72	45.67	46.45	50.55	53.54	55.11	61.41	69.29	77.16	78.74
1.267	30	3.008	38	3.810	34.01	37.95	38.74	41.89	44.25	45.82	49.76	50.55	54.64	57.63	59.21	65.51	73.38	81.26	82.83
1.268	56	5.614	71	7.118	29.36	33.30	34.09	37.24	39.60	41.17	45.11	45.90	49.99	52.98	54.56	60.86	68.74	76.61	78.19
1.268	71	7.118	90	9.023	26.68	30.61	31.40	34.55	36.92	38.49	42.43	43.22	47.31	50.30	51.88	58.18	66.06	73.93	75.51
1.269	26	2.607	33	3.308	34.72	38.66	39.45	42.60	44.96	46.53	50.47	51.26	55.35	58.34	59.92	66.22	74.09	81.97	83.54
1.270	63	6.316	80	8.020	28.10	32.03	32.82	35.98	38.34	39.91	43.85	44.64	48.73	51.72	53.30	59.60	67.48	75.35	76.93
1.273	22	2.206	28	2.807	35.43	39.37	40.16	43.31	45.67	47.24	51.18	51.97	56.06	59.05	60.63	66.93	74.80	82.68	84.25
1.273	33	3.308	42	4.211	33.46	37.40	38.19	41.34	43.70	45.27	49.21	50.00	54.09	57.08	58.66	64.96	72.83	80.71	82.28
1.276	29	2.907	37	3.709	34.17	38.11	38.90	42.05	44.41	45.98	49.92	50.71	54.80	57.79	59.37	65.67	73.54	81.42	82.99
1.280	25	2.506	32	3.208	34.88	38.82	39.61	42.76	45.12	46.69	50.63	51.42	55.51	58.50	60.08	66.38	74.25	82.13	83.70
1.281	32	3.208	41	4.110	33.62	37.55	38.34	41.50	43.86	45.43	49.37	50.16	54.25	57.24	58.82	65.12	72.99	80.87	82.44
1.282	39	3.910	50	5.013	32.36	36.29	37.08	40.23	42.59	44.17	48.11	48.89	52.99	55.98	57.55	63.85	71.73	79.60	81.18
1.286	28	2.807	36	3.609	34.33	38.26	39.05	42.20	44.56	46.14	50.08	50.86	54.96	57.95	59.52	65.82	73.70	81.57	83.15
1.286	35	3.509	45	4.511	33.07	37.00	37.79	40.94	43.30	44.88	48.82	49.60	53.70	56.69	58.26	64.56	72.44	80.31	81.89
1.290	31	3.108	40	4.010	33.78	37.71	38.50	41.65	44.01	45.59	49.53	50.31	54.41	57.40	58.97	65.27	73.15	81.02	82.60
1.293	41	4.110	53	5.314	31.96	35.90	36.69	39.84	42.20	43.77	47.71	48.50	52.59	55.59	57.16	63.46	71.34	79.21	80.79
1.296	27	2.707	35	3.509	34.49	38.42	39.21	42.36	44.72	46.30	50.24	51.02	55.12	58.11	59.68	65.98	73.86	81.73	83.31
1.297	37	3.709	48	4.812	32.67	36.61	37.40	40.55	42.91	44.48	48.42	49.21	53.30	56.29	57.87	64.17	72.05	79.92	81.50
1.300	30	3.008	39	3.910	33.93	37.87	38.66	41.81	44.17	45.74	49.68	50.47	54.56	57.55	59.13	65.43	73.31	81.18	82.76
1.308	26	2.607	34	3.409	34.64	38.58	39.37	42.52	44.88	46.45	50.39	51.18	55.27	58.26	59.84	66.14	74.01	81.89	83.46
1.310	29	2.907	38	3.810	34.09	38.03	38.82	41.97	44.33	45.90	49.84	50.63	54.72	57.71	59.29	65.59	73.46	81.34	82.91
1.313	32	3.208	42	4.211	33.54	37.47	38.26	41.42	43.78	45.35	49.29	50.08	54.17	57.16	58.74	65.04	72.91	80.79	82.36
1.313	48	4.812	63	6.316	30.62	34.56	35.35	38.50	40.86	42.43	46.37	47.16	51.25	54.24	55.82	62.12	70.00	77.87	79.45
1.316	38	3.810	50	5.013	32.43	36.37	37.16	40.31	42.67	44.25	48.19	48.97	53.07	56.06	57.63	63.93	71.81	79.68	81.26
1.318	22	2.206	29	2.907	35.35	39.29	40.08	43.23	45.59	47.16	51.10	51.89	55.98	58.97	60.55	66.85	74.72	82.60	84.17
1.320	25	2.506	33	3.308	34.80	38.74	39.53	42.68	45.04	46.61	50.55	51.34	55.43	58.42	60.00	66.30	74.17	82.05	83.62
1.321	28	2.807	37	3.709	34.25	38.18	38.97	42.12	44.49	46.06	50.00	50.79	54.88	57.87	59.45	65.75	73.62	81.50	83.07
1.323	31	3.108	41	4.110	33.70	37.63	38.42	41.57	43.93	45.51	49.45	50.23	54.33	57.32	58.89	65.19	73.07	80.94	82.52
1.324	34	3.409	45	4.511	33.15	37.08	37.87	41.02	43.38	44.96	48.90	49.68	53.78	56.77	58.34	64.64	72.52	80.39	81.97
1.325	40	4.010	53	5.314	32.04	35.98	36.77	39.92	42.28	43.85	47.79	48.58	52.67	55.66	57.24	63.54	71.41	79.29	80.86
1.333	27	2.707	36	3.609	34.41	38.34	39.13	42.28	44.64	46.22	50.16	50.94	55.04	58.03	59.60	65.90	73.78	81.65	83.23
1.333	30	3.008	40	4.010	33.85	37.79	38.58	41.73	44.09	45.67	49.61	50.39	54.49	57.48	59.05	65.35	73.23	81.10	82.68
1.333	36	3.609	48	4.812	32.75	36.69	37.48	40.63	42.99	44.56	48.50	49.29	53.38	56.37	57.95	64.25	72.12	80.00	81.57
1.333	42	4.211	56	5.614	31.65	35.58	36.37	39.52	41.88	43.46	47.40	48.18	52.28	55.27	56.84	63.14	71.02	78.90	80.47
1.333	45	4.511	60	6.015	31.09	35.03	35.82	38.97	41.33	42.91	46.85	47.63	51.73	54.72	56.29	62.59	70.47	78.34	79.92
1.333	60	6.015	80	8.020	28.33	32.27	33.06	36.21	38.57	40.14	44.09	44.87	48.97	51.96	53.53	59.83	67.71	75.59	77.16
1.339	56	5.614	75	7.519	29.04	32.98	33.77	36.92	39.28	40.85	44.80	45.58	49.68	52.67	54.24	60.54	68.42	76.29	77.87
1.340	50	5.013	67	6.717	30.15	34.08	34.87	38.02	40.38	41.96	45.90	46.68	50.78	53.77	55.35	61.65	69.52	77.40	78.97
1.340	53	5.314	71	7.118	29.59	33.53	34.32	37.47	39.83	41.41	45.35	46.13	50.23	53.22	54.79	61.09	68.97	76.85	78.42
1.343	67	6.717	90	9.023	26.98	30.92	31.71	34.86	37.22	38.80	42.74	43.53	47.62	50.61	52.19	58.49	66.37	74.24	75.82
1.345	29	2.907	39	3.910	34.01	37.95	38.74	41.89	44.25	45.82	49.76	50.55	54.64	57.63	59.21	65.51	73.38	81.26	82.83
1.346	26	2.607	35	3.509	34.56	38.50	39.29	42.44	44.80	46.37	50.31	51.10	55.19	58.18	59.76	66.06	73.94	81.81	83.39
1.351	37	3.709	50	5.013	32.51	36.45	37.24	40.39	42.75	44.32	48.27	49.05	53.15	56.14	57.71	64.01	71.89	79.76	81.34
1.355	31	3.108	42	4.211	33.62	37.55	38.34	41.49	43.85	45.43	49.37	50.15	54.25	57.24	58.81	65.11	72.99	80.86	82.44
1.357	28	2.807	38	3.810	34.17	38.10	38.89	42.05	44.41	45.98	49.92	50.71	54.80	57.79	59.37	65.67	73.54	81.42	82.99
1.359	39	3.910	53	5.314	32.12	36.05	36.84	39.99	42.35	43.93	47.87	48.66	52.75	55.74	57.32	63.62	71.49	79.37	80.94
1.360	25	2.506	34	3.409	34.72	38.66	39.45	42.60	44.96	46.53	50.47	51.26	55.35	58.34	59.92	66.22	74.09	81.97	83.54
1.364	22	2.206	30	3.008	35.27	39.21	40.00	43.15	45.51	47.08	51.02	51.81	55.90	58.89	60.47	66.77	74.64	82.52	84.09
1.364	33	3.308	45	4.511	33.22	37.16	37.95	41.10	43.46	45.03	48.98	49.76	53.86	56.85	58.42	64.72	72.60	80.47	82.05
Length factor*					**1.22**	**1.26**	**1.26**	**1.29**	**1.31**	**1.32**	**1.35**	**1.36**	**1.38**	**1.40**	**1.41**	**1.45**	**1.49**	**1.52**	**1.53**

Center distance is greater than eight times the small sprocket and the large sprocket is not flanged. See Engineering Section for details.

* The length correction factor must be used to determine the proper belt width.

Selection program available online at ptwizard.com and passport.baldor.com

HT500 selection table – 8mm pitch HT500 belts

Speed ratio	Sprocket combinations: Driver No. of teeth	Driver Pitch dia. inches	Driven No. of teeth	Driven Pitch dia. inches	Center distance, inches: 640-8MX	720-8MX	800-8MX	896-8MX	960-8MX	1000-8MX	1040-8MX	1120-8MX	1200-8MX	1224-8MX	1280-8MX	1440-8MX	1600-8MX	1760-8MX	1792-8MX
Length factor*					**0.79**	**0.83**	**0.87**	**0.91**	**0.94**	**0.96**	**0.97**	**1.00**	**1.03**	**1.03**	**1.05**	**1.10**	**1.14**	**1.17**	**1.18**
1.366	41	4.110	56	5.614		6.49	8.08	9.97	11.24	12.02	12.81	14.39	15.97	16.44	17.54	20.69	23.85	27.00	27.63
1.367	30	3.008	41	4.110	6.99	8.57	10.14	12.04	13.30	14.08	14.87	16.45	18.02	18.50	19.60	22.75	25.90	29.05	29.68
1.370	27	2.707	37	3.709	7.54	9.12	10.70	12.59	13.85	14.64	15.42	17.00	18.57	19.05	20.15	23.30	26.45	29.60	30.23
1.371	35	3.509	48	4.812	6.03	7.61	9.19	11.09	12.35	13.13	13.92	15.50	17.07	17.55	18.65	21.80	24.95	28.10	28.73
1.379	29	2.907	40	4.010	7.15	8.72	10.30	12.19	13.46	14.24	15.03	16.60	18.18	18.65	19.75	22.91	26.06	29.21	29.84
1.385	26	2.607	36	3.609	7.70	9.28	10.86	12.75	14.01	14.79	15.58	17.16	18.73	19.21	20.31	23.46	26.61	29.76	30.39
1.389	36	3.609	50	5.013	5.79	7.37	8.95	10.85	12.11	12.89	13.68	15.26	16.83	17.31	18.41	21.56	24.71	27.86	28.49
1.393	28	2.807	39	3.910	7.30	8.88	10.46	12.35	13.61	14.40	15.18	16.76	18.34	18.81	19.91	23.06	26.21	29.36	29.99
1.395	38	3.810	53	5.314	5.38	6.97	8.55	10.45	11.71	12.50	13.28	14.86	16.44	16.91	18.01	21.17	24.32	27.47	28.10
1.396	48	4.812	67	6.717			6.63	8.53	9.80	10.59	11.38	12.96	14.53	15.01	16.11	19.27	22.42	25.57	26.20
1.400	25	2.506	35	3.509	7.86	9.44	11.01	12.91	14.17	14.95	15.74	17.31	18.89	19.36	20.46	23.62	26.77	29.92	30.55
1.400	30	3.008	42	4.211	6.90	8.48	10.06	11.96	13.22	14.00	14.79	16.36	17.94	18.42	19.52	22.67	25.82	28.97	29.60
1.400	40	4.010	56	5.614		6.57	8.15	10.05	11.31	12.10	12.89	14.46	16.04	16.52	17.62	20.77	23.92	27.07	27.70
1.400	45	4.511	63	6.316			7.19	9.09	10.36	11.14	11.93	13.51	15.09	15.57	16.67	19.82	22.97	26.13	26.76
1.400	80	8.020	112	11.229											9.95	13.13	16.30	19.46	20.09
1.406	32	3.208	45	4.511	6.50	8.09	9.67	11.56	12.82	13.61	14.39	15.97	17.55	18.02	19.12	22.27	25.42	28.58	29.21
1.407	27	2.707	38	3.810	7.46	9.04	10.62	12.51	13.77	14.56	15.34	16.92	18.49	18.97	20.07	23.22	26.37	29.52	30.15
1.409	22	2.206	31	3.108	8.41	9.99	11.57	13.46	14.72	15.50	16.29	17.87	19.44	19.92	21.02	24.17	27.32	30.47	31.10
1.412	34	3.409	48	4.812	6.10	7.69	9.27	11.16	12.42	13.21	14.00	15.57	17.15	17.62	18.73	21.88	25.03	28.18	28.81
1.414	29	2.907	41	4.110	7.06	8.64	10.22	12.11	13.38	14.16	14.95	16.52	18.10	18.57	19.67	22.83	25.98	29.13	29.76
1.415	53	5.314	75	7.519				7.48	8.75	9.54	10.33	11.91	13.50	13.97	15.08	18.23	21.39	24.54	25.17
1.420	50	5.013	71	7.118				8.04	9.31	10.10	10.89	12.47	14.05	14.53	15.63	18.79	21.94	25.10	25.73
1.423	26	2.607	37	3.709	7.62	9.20	10.78	12.67	13.93	14.71	15.50	17.08	18.65	19.13	20.23	23.38	26.53	29.68	30.31
1.429	28	2.807	40	4.010	7.22	8.80	10.38	12.27	13.53	14.32	15.10	16.68	18.26	18.73	19.83	22.98	26.13	29.28	29.91
1.429	35	3.509	50	5.013	5.86	7.44	9.03	10.92	12.18	12.97	13.76	15.33	16.91	17.39	18.49	21.64	24.79	27.94	28.57
1.429	42	4.211	60	6.015		6.08	7.67	9.57	10.83	11.62	12.41	13.98	15.56	16.04	17.14	20.29	23.45	26.60	27.23
1.429	56	5.614	80	8.020					8.10	8.90	9.69	11.27	12.86	13.33	14.44	17.60	20.75	23.91	24.54
1.429	63	6.316	90	9.023							8.31	9.91	11.49	11.97	13.08	16.24	19.40	22.56	23.19
1.432	37	3.709	53	5.314	5.45	7.04	8.63	10.52	11.79	12.57	13.36	14.94	16.51	16.99	18.09	21.24	24.40	27.55	28.18
1.436	39	3.910	56	5.614		6.64	8.23	10.12	11.39	12.18	12.96	14.54	16.12	16.59	17.69	20.85	24.00	27.15	27.78
1.440	25	2.506	36	3.609	7.78	9.36	10.93	12.83	14.09	14.87	15.66	17.23	18.81	19.28	20.38	23.54	26.69	29.84	30.47
1.444	27	2.707	39	3.910	7.38	8.96	10.54	12.43	13.69	14.48	15.26	16.84	18.41	18.89	19.99	23.14	26.29	29.44	30.07
1.448	29	2.907	42	4.211	6.98	8.56	10.14	12.03	13.29	14.08	14.87	16.44	18.02	18.49	19.59	22.75	25.90	29.05	29.68
1.452	31	3.108	45	4.511	6.58	8.16	9.74	11.63	12.90	13.68	14.47	16.05	17.62	18.10	19.20	22.35	25.50	28.65	29.28
1.455	22	2.206	32	3.208	8.33	9.91	11.49	13.38	14.64	15.42	16.21	17.79	19.36	19.84	20.94	24.09	27.24	30.39	31.02
1.455	33	3.308	48	4.812	6.18	7.76	9.34	11.24	12.50	13.29	14.07	15.65	17.23	17.70	18.80	21.95	25.11	28.26	28.89
1.462	26	2.607	38	3.810	7.54	9.12	10.69	12.59	13.85	14.63	15.42	16.99	18.57	19.05	20.15	23.30	26.45	29.60	30.23
1.463	41	4.110	60	6.015		6.15	7.74	9.64	10.91	11.69	12.48	14.06	15.64	16.11	17.22	20.37	23.52	26.68	27.31
1.464	28	2.807	41	4.110	7.14	8.72	10.30	12.19	13.45	14.24	15.02	16.60	18.18	18.65	19.75	22.90	26.05	29.21	29.84
1.471	34	3.409	50	5.013	5.93	7.52	9.10	11.00	12.26	13.05	13.83	15.41	16.99	17.46	18.56	21.72	24.87	28.02	28.65
1.472	36	3.609	53	5.314	5.53	7.12	8.70	10.60	11.86	12.65	13.43	15.01	16.59	17.07	18.17	21.32	24.47	27.62	28.25
1.474	38	3.810	56	5.614		6.71	8.30	10.20	11.46	12.25	13.04	14.62	16.19	16.67	17.77	20.92	24.08	27.23	27.86
1.479	48	4.812	71	7.118				8.19	9.46	10.25	11.04	12.62	14.20	14.68	15.78	18.94	22.10	25.25	25.88
1.480	25	2.506	37	3.709	7.70	9.27	10.85	12.74	14.01	14.79	15.58	17.15	18.73	19.20	20.30	23.46	26.61	29.76	30.39
1.481	27	2.707	40	4.010	7.30	8.88	10.45	12.35	13.61	14.39	15.18	16.76	18.33	18.81	19.91	23.06	26.21	29.36	29.99
1.489	45	4.511	67	6.717			6.84	8.75	10.02	10.81	11.60	13.18	14.76	15.24	16.34	19.50	22.65	25.80	26.43
1.493	75	7.519	112	11.229											10.30	13.49	16.67	19.83	20.47
1.500	22	2.206	33	3.308	8.25	9.83	11.41	13.30	14.56	15.34	16.13	17.71	19.28	19.76	20.86	24.01	27.16	30.31	30.94
1.500	26	2.607	39	3.910	7.45	9.03	10.61	12.50	13.77	14.55	15.34	16.91	18.49	18.97	20.07	23.22	26.37	29.52	30.15
1.500	28	2.807	42	4.211	7.05	8.63	10.21	12.11	13.37	14.16	14.94	16.52	18.09	18.57	19.67	22.82	25.97	29.12	29.75
1.500	30	3.008	45	4.511	6.65	8.24	9.82	11.71	12.97	13.76	14.55	16.12	17.70	18.17	19.27	22.43	25.58	28.73	29.36
1.500	32	3.208	48	4.812	6.25	7.84	9.42	11.31	12.58	13.36	14.15	15.73	17.30	17.78	18.88	22.03	25.18	28.33	28.97
1.500	40	4.010	60	6.015		6.22	7.81	9.71	10.98	11.77	12.56	14.14	15.71	16.19	17.29	20.45	23.60	26.75	27.38
1.500	42	4.211	63	6.316		5.81	7.41	9.31	10.58	11.37	12.16	13.74	15.32	15.79	16.89	20.05	23.20	26.36	26.99
1.500	50	5.013	75	7.519				7.70	8.97	9.76	10.55	12.14	13.72	14.20	15.30	18.46	21.62	24.77	25.40
1.500	60	6.015	90	9.023							8.53	10.12	11.71	12.19	13.30	16.47	19.63	22.78	23.42
1.509	53	5.314	80	8.020					8.32	9.11	9.90	11.49	13.08	13.55	14.66	17.82	20.98	24.13	24.77
1.514	35	3.509	53	5.314	5.60	7.19	8.77	10.67	11.94	12.72	13.51	15.09	16.67	17.14	18.24	21.40	24.55	27.70	28.33
1.514	37	3.709	56	5.614	5.19	6.79	8.37	10.27	11.54	12.33	13.11	14.69	16.27	16.75	17.85	21.00	24.15	27.31	27.94
1.515	33	3.308	50	5.013	6.00	7.59	9.18	11.07	12.34	13.12	13.91	15.49	17.06	17.54	18.64	21.79	24.95	28.10	28.73
1.519	27	2.707	41	4.110	7.21	8.79	10.37	12.27	13.53	14.31	15.10	16.68	18.25	18.73	19.83	22.98	26.13	29.28	29.91
1.520	25	2.506	38	3.810	7.61	9.19	10.77	12.66	13.92	14.71	15.50	17.07	18.65	19.12	20.22	23.38	26.53	29.68	30.31
1.537	41	4.110	63	6.316		5.88	7.48	9.39	10.65	11.44	12.23	13.81	15.39	15.87	16.97	20.13	23.28	26.43	27.06
1.538	26	2.607	40	4.010	7.37	8.95	10.53	12.42	13.69	14.47	15.26	16.83	18.41	18.88	19.99	23.14	26.29	29.44	30.07
1.538	39	3.910	60	6.015		6.29	7.88	9.79	11.05	11.84	12.63	14.21	15.79	16.27	17.37	20.52	23.68	26.83	27.46
1.545	22	2.206	34	3.409	8.17	9.75	11.32	13.22	14.48	15.26	16.05	17.62	19.20	19.68	20.78	23.93	27.08	30.23	30.86
1.548	31	3.108	48	4.812	6.32	7.91	9.49	11.39	12.65	13.44	14.22	15.80	17.38	17.85	18.96	22.11	25.26	28.41	29.04
1.552	29	2.907	45	4.511	6.73	8.31	9.89	11.79	13.05	13.84	14.62	16.20	17.78	18.25	19.35	22.50	25.66	28.81	29.44
1.556	27	2.707	42	4.211	7.13	8.71	10.29	12.18	13.45	14.23	15.02	16.59	18.17	18.65	19.75	22.90	26.05	29.20	29.83
1.556	36	3.609	56	5.614	5.26	6.86	8.45	10.35	11.61	12.40	13.19	14.77	16.35	16.82	17.92	21.08	24.23	27.38	28.01
1.559	34	3.409	53	5.314	5.67	7.26	8.85	10.75	12.01	12.80	13.59	15.16	16.74	17.22	18.32	21.47	24.63	27.78	28.41
1.560	25	2.506	39	3.910	7.53	9.11	10.69	12.58	13.84	14.63	15.41	16.99	18.57	19.04	20.14	23.30	26.45	29.60	30.23
1.563	32	3.208	50	5.013	6.08	7.67	9.25	11.15	12.41	13.20	13.98	15.56	17.14	17.62	18.72	21.87	25.02	28.17	28.80
1.563	48	4.812	75	7.519				7.84	9.11	9.91	10.70	12.29	13.87	14.35	15.45	18.61	21.77	24.92	25.55
1.575	40	4.010	63	6.316		5.95	7.55	9.46	10.73	11.52	12.31	13.89	15.47	15.94	17.05	20.20	23.36	26.51	27.14
1.577	26	2.607	41	4.110	7.29	8.87	10.45	12.34	13.60	14.39	15.18	16.75	18.33	18.80	19.91	23.06	26.21	29.36	29.99
1.577	71	7.118	112	11.229										9.46	10.59	13.78	16.96	20.13	20.76
Length factor*					**0.79**	**0.83**	**0.87**	**0.91**	**0.94**	**0.96**	**0.97**	**1.00**	**1.03**	**1.03**	**1.05**	**1.10**	**1.14**	**1.17**	**1.18**

* The length correction factor must be used to determine the proper belt width.

Selection program available online at ptwizard.com and passport.baldor.com

HT500 selection table – 8mm pitch HT500 belts (continued)

Speed ratio	Sprocket combinations				Center distance, inches														
	Driver		Driven																
	No. of teeth	Pitch dia. inches	No. of teeth	Pitch dia. inches	2000-8MX	2200-8MX	2240-8MX	2400-8MX	2520-8MX	2600-8MX	2800-8MX	2840-8MX	3048-8MX	3200-8MX	3280-8MX	3600-8MX	4000-8MX	4400-8MX	4480-8MX
Length factor*					**1.22**	**1.26**	**1.26**	**1.29**	**1.31**	**1.32**	**1.35**	**1.36**	**1.38**	**1.40**	**1.41**	**1.45**	**1.49**	**1.52**	**1.53**
1.366	41	4.110	56	5.614	31.72	35.66	36.45	39.60	41.96	43.54	47.48	48.26	52.20	55.35	56.92	63.22	71.10	78.97	80.55
1.367	30	3.008	41	4.110	33.78	37.71	38.50	41.65	44.01	45.59	49.53	50.31	54.25	57.40	58.97	65.27	73.15	81.02	82.60
1.370	27	2.707	37	3.709	34.33	38.26	39.05	42.20	44.56	46.14	50.08	50.86	54.80	57.95	59.52	65.82	73.70	81.57	83.15
1.371	35	3.509	48	4.812	32.83	36.76	37.55	40.70	43.06	44.64	48.58	49.37	53.30	56.45	58.03	64.33	72.20	80.08	81.65
1.379	29	2.907	40	4.010	33.93	37.87	38.66	41.81	44.17	45.74	49.68	50.47	54.40	57.55	59.13	65.43	73.31	81.18	82.76
1.385	26	2.607	36	3.609	34.48	38.42	39.21	42.36	44.72	46.30	50.24	51.02	54.96	58.11	59.68	65.98	73.86	81.73	83.31
1.389	36	3.609	50	5.013	32.59	36.53	37.32	40.47	42.83	44.40	48.34	49.13	53.06	56.21	57.79	64.09	71.96	79.84	81.42
1.393	28	2.807	39	3.910	34.09	38.03	38.82	41.97	44.33	45.90	49.84	50.63	54.56	57.71	59.29	65.59	73.46	81.34	82.91
1.395	38	3.810	53	5.314	32.20	36.13	36.92	40.07	42.43	44.01	47.95	48.73	52.67	55.82	57.39	63.69	71.57	79.45	81.02
1.396	48	4.812	67	6.717	30.30	34.24	35.03	38.18	40.54	42.11	46.06	46.84	50.78	53.93	55.50	61.80	69.68	77.55	79.13
1.400	25	2.506	35	3.509	34.64	38.58	39.37	42.52	44.88	46.45	50.39	51.18	55.11	58.26	59.84	66.14	74.01	81.89	83.46
1.400	30	3.008	42	4.211	33.69	37.63	38.42	41.57	43.93	45.51	49.45	50.23	54.17	57.32	58.89	65.19	73.07	80.94	82.52
1.400	40	4.010	56	5.614	31.80	35.74	36.53	39.68	42.04	43.61	47.55	48.34	52.28	55.43	57.00	63.30	71.18	79.05	80.63
1.400	45	4.511	63	6.316	30.85	34.79	35.58	38.73	41.09	42.67	46.61	47.39	51.33	54.48	56.05	62.35	70.23	78.11	79.68
1.400	80	8.020	112	11.229	24.20	28.14	28.93	32.09	34.45	36.03	39.97	40.76	44.69	47.84	49.42	55.72	63.60	71.48	73.05
1.406	32	3.208	45	4.511	33.30	37.24	38.03	41.18	43.54	45.11	49.05	49.84	53.77	56.92	58.50	64.80	72.67	80.55	82.12
1.407	27	2.707	38	3.810	34.25	38.18	38.97	42.12	44.48	46.06	50.00	50.78	54.72	57.87	59.44	65.74	73.62	81.49	83.07
1.409	22	2.206	31	3.108	35.19	39.13	39.92	43.07	45.43	47.00	50.94	51.73	55.66	58.81	60.39	66.69	74.57	82.44	84.02
1.412	34	3.409	48	4.812	32.91	36.84	37.63	40.78	43.14	44.72	48.66	49.44	53.38	56.53	58.10	64.40	72.28	80.16	81.73
1.414	29	2.907	41	4.110	33.85	37.79	38.58	41.73	44.09	45.66	49.61	50.39	54.33	57.48	59.05	65.35	73.23	81.10	82.68
1.415	53	5.314	75	7.519	29.27	33.21	34.00	37.15	39.51	41.09	45.03	45.81	49.75	52.90	54.47	60.78	68.65	76.53	78.10
1.420	50	5.013	71	7.118	29.82	33.76	34.55	37.70	40.06	41.64	45.58	46.37	50.30	53.45	55.03	61.33	69.20	77.08	78.66
1.423	26	2.607	37	3.709	34.41	38.34	39.13	42.28	44.64	46.22	50.16	50.94	54.88	58.03	59.60	65.90	73.78	81.65	83.23
1.429	28	2.807	40	4.010	34.01	37.95	38.74	41.89	44.25	45.82	49.76	50.55	54.48	57.63	59.21	65.51	73.38	81.26	82.83
1.429	35	3.509	50	5.013	32.67	36.60	37.39	40.54	42.91	44.48	48.42	49.21	53.14	56.29	57.87	64.17	72.04	79.92	81.49
1.429	42	4.211	60	6.015	31.33	35.26	36.05	39.20	41.56	43.14	47.08	47.87	51.80	54.95	56.53	62.83	70.70	78.58	80.15
1.429	56	5.614	80	8.020	28.64	32.57	33.37	36.52	38.88	40.45	44.40	45.18	49.12	52.27	53.84	60.14	68.02	75.90	77.47
1.429	63	6.316	90	9.023	27.29	31.23	32.02	35.17	37.53	39.11	43.05	43.84	47.77	50.92	52.50	58.80	66.68	74.56	76.13
1.432	37	3.709	53	5.314	32.27	36.21	37.00	40.15	42.51	44.09	48.03	48.81	52.75	55.90	57.47	63.77	71.65	79.52	81.10
1.436	39	3.910	56	5.614	31.88	35.81	36.60	39.76	42.12	43.69	47.63	48.42	52.35	55.50	57.08	63.38	71.25	79.13	80.71
1.440	25	2.506	36	3.609	34.56	38.50	39.29	42.44	44.80	46.37	50.31	51.10	55.03	58.18	59.76	66.06	73.94	81.81	83.39
1.444	27	2.707	39	3.910	34.17	38.10	38.89	42.04	44.40	45.98	49.92	50.70	54.64	57.79	59.36	65.67	73.54	81.42	82.99
1.448	29	2.907	42	4.211	33.77	37.71	38.50	41.65	44.01	45.58	49.53	50.31	54.25	57.40	58.97	65.27	73.15	81.02	82.60
1.452	31	3.108	45	4.511	33.38	37.31	38.10	41.26	43.62	45.19	49.13	49.92	53.85	57.00	58.58	64.88	72.75	80.63	82.20
1.455	22	2.206	32	3.208	35.11	39.05	39.84	42.99	45.35	46.93	50.87	51.65	55.59	58.74	60.31	66.61	74.49	82.36	83.94
1.455	33	3.308	48	4.812	32.98	36.92	37.71	40.86	43.22	44.80	48.74	49.52	53.46	56.61	58.18	64.48	72.36	80.23	81.81
1.462	26	2.607	38	3.810	34.32	38.26	39.05	42.20	44.56	46.14	50.08	50.86	54.80	57.95	59.52	65.82	73.70	81.57	83.15
1.463	41	4.110	60	6.015	31.40	35.34	36.13	39.28	41.64	43.22	47.16	47.94	51.88	55.03	56.60	62.91	70.78	78.66	80.23
1.464	28	2.807	41	4.110	33.93	37.87	38.66	41.81	44.17	45.74	49.68	50.47	54.40	57.55	59.13	65.43	73.30	81.18	82.75
1.471	34	3.409	50	5.013	32.75	36.68	37.47	40.62	42.98	44.56	48.50	49.28	53.22	56.37	57.94	64.25	72.12	80.00	81.57
1.472	36	3.609	53	5.314	32.35	36.29	37.08	40.23	42.59	44.16	48.10	48.89	52.83	55.98	57.55	63.85	71.73	79.60	81.18
1.474	38	3.810	56	5.614	31.96	35.89	36.68	39.83	42.19	43.77	47.71	48.50	52.43	55.58	57.16	63.46	71.33	79.21	80.78
1.479	48	4.812	71	7.118	29.98	33.92	34.71	37.86	40.22	41.79	45.74	46.52	50.46	53.61	55.18	61.48	69.36	77.24	78.81
1.480	25	2.506	37	3.709	34.48	38.42	39.21	42.36	44.72	46.29	50.24	51.02	54.96	58.11	59.68	65.98	73.86	81.73	83.31
1.481	27	2.707	40	4.010	34.09	38.02	38.81	41.96	44.32	45.90	49.84	50.63	54.56	57.71	59.29	65.59	73.46	81.34	82.91
1.489	45	4.511	67	6.717	30.53	34.47	35.26	38.41	40.77	42.35	46.29	47.07	51.01	54.16	55.74	62.04	69.91	77.79	79.36
1.493	75	7.519	112	11.229	24.58	28.52	29.31	32.47	34.83	36.41	40.35	41.14	45.08	48.23	49.81	56.11	63.99	71.87	73.44
1.500	22	2.206	33	3.308	35.03	38.97	39.76	42.91	45.27	46.85	50.79	51.57	55.51	58.66	60.23	66.53	74.41	82.28	83.86
1.500	26	2.607	39	3.910	34.25	38.18	38.97	42.12	44.48	46.06	50.00	50.78	54.72	57.87	59.44	65.74	73.62	81.49	83.07
1.500	28	2.807	42	4.211	33.85	37.79	38.58	41.73	44.09	45.66	49.60	50.39	54.32	57.47	59.05	65.35	73.22	81.10	82.68
1.500	30	3.008	45	4.511	33.46	37.39	38.18	41.33	43.69	45.27	49.21	49.99	53.93	57.08	58.65	64.96	72.83	80.71	82.28
1.500	32	3.208	48	4.812	33.06	37.00	37.79	40.94	43.30	44.87	48.81	49.60	53.54	56.69	58.26	64.56	72.44	80.31	81.89
1.500	40	4.010	60	6.015	31.48	35.42	36.21	39.36	41.72	43.29	47.24	48.02	51.96	55.11	56.68	62.98	70.86	78.74	80.31
1.500	42	4.211	63	6.316	31.08	35.02	35.81	38.96	41.32	42.90	46.84	47.63	51.56	54.71	56.29	62.59	70.46	78.34	79.92
1.500	50	5.013	75	7.519	29.50	33.44	34.23	37.38	39.74	41.32	45.26	46.05	49.98	53.13	54.71	61.01	68.89	76.76	78.34
1.500	60	6.015	90	9.023	27.52	31.46	32.25	35.40	37.76	39.34	43.28	44.07	48.01	51.16	52.73	59.04	66.91	74.79	76.36
1.509	53	5.314	80	8.020	28.87	32.80	33.60	36.75	39.11	40.69	44.63	45.41	49.35	52.50	54.08	60.38	68.25	76.13	77.71
1.514	35	3.509	53	5.314	32.43	36.36	37.15	40.31	42.67	44.24	48.18	48.97	52.90	56.05	57.63	63.93	71.80	79.68	81.26
1.514	37	3.709	56	5.614	32.03	35.97	36.76	39.91	42.27	43.85	47.79	48.57	52.51	55.66	57.23	63.54	71.41	79.29	80.86
1.515	33	3.308	50	5.013	32.82	36.76	37.55	40.70	43.06	44.64	48.58	49.36	53.30	56.45	58.02	64.32	72.20	80.08	81.65
1.519	27	2.707	41	4.110	34.01	37.94	38.73	41.89	44.25	45.82	49.76	50.55	54.48	57.63	59.21	65.51	73.38	81.26	82.83
1.520	25	2.506	38	3.810	34.40	38.34	39.13	42.28	44.64	46.21	50.16	50.94	54.88	58.03	59.60	65.90	73.78	81.65	83.23
1.537	41	4.110	63	6.316	31.16	35.10	35.89	39.04	41.40	42.98	46.92	47.70	51.64	54.79	56.37	62.67	70.54	78.42	79.99
1.538	26	2.607	40	4.010	34.17	38.10	38.89	42.04	44.40	45.98	49.92	50.70	54.64	57.79	59.36	65.66	73.54	81.41	82.99
1.538	39	3.910	60	6.015	31.56	35.49	36.28	39.44	41.80	43.37	47.31	48.10	52.03	55.18	56.76	63.06	70.94	78.81	80.39
1.545	22	2.206	34	3.409	34.95	38.89	39.68	42.83	45.19	46.77	50.71	51.49	55.43	58.58	60.15	66.45	74.33	82.20	83.78
1.548	31	3.108	48	4.812	33.14	37.07	37.87	41.02	43.38	44.95	48.89	49.68	53.61	56.76	58.34	64.64	72.51	80.39	81.97
1.552	29	2.907	45	4.511	33.53	37.47	38.26	41.41	43.77	45.35	49.29	50.07	54.01	57.16	58.73	65.03	72.91	80.78	82.36
1.556	27	2.707	42	4.211	33.93	37.86	38.65	41.80	44.17	45.74	49.68	50.47	54.40	57.55	59.13	65.43	73.30	81.18	82.75
1.556	36	3.609	56	5.614	32.11	36.05	36.84	39.99	42.35	43.92	47.87	48.65	52.59	55.74	57.31	63.61	71.49	79.36	80.94
1.559	34	3.409	53	5.314	32.51	36.44	37.23	40.38	42.74	44.32	48.26	49.04	52.98	56.13	57.71	64.01	71.88	79.76	81.33
1.560	25	2.506	39	3.910	34.32	38.26	39.05	42.20	44.56	46.14	50.08	50.86	54.80	57.95	59.52	65.82	73.70	81.57	83.15
1.563	32	3.208	50	5.013	32.90	36.84	37.63	40.78	43.14	44.71	48.65	49.44	53.38	56.53	58.10	64.40	72.28	80.15	81.73
1.563	48	4.812	75	7.519	29.65	33.59	34.38	37.54	39.90	41.47	45.42	46.20	50.14	53.29	54.86	61.17	69.04	76.92	78.49
1.575	40	4.010	63	6.316	31.24	35.18	35.97	39.12	41.48	43.05	47.00	47.78	51.72	54.87	56.44	62.74	70.62	78.50	80.07
1.577	26	2.607	41	4.110	34.09	38.02	38.81	41.96	44.32	45.90	49.84	50.62	54.56	57.71	59.28	65.59	73.46	81.34	82.91
1.577	71	7.118	112	11.229	24.88	28.82	29.61	32.77	35.14	36.71	40.66	41.44	45.38	48.54	50.11	56.42	64.30	72.18	73.75
Length factor*					**1.22**	**1.26**	**1.26**	**1.29**	**1.31**	**1.32**	**1.35**	**1.36**	**1.38**	**1.40**	**1.41**	**1.45**	**1.49**	**1.52**	**1.53**

Center distance is greater than eight times the small sprocket and the large sprocket is not flanged. See Engineering Section for details.

* The length correction factor must be used to determine the proper belt width.

Selection program available online at ptwizard.com and passport.baldor.com

HT500 selection table – 8mm pitch HT500 belts

Speed ratio	Sprocket combinations: Driver No. of teeth	Driver Pitch dia. inches	Driven No. of teeth	Driven Pitch dia. inches	Center distance, inches: 640-8MX	720-8MX	800-8MX	896-8MX	960-8MX	1000-8MX	1040-8MX	1120-8MX	1200-8MX	1224-8MX	1280-8MX	1440-8MX	1600-8MX	1760-8MX	1792-8MX
Length factor*					**0.79**	**0.83**	**0.87**	**0.91**	**0.94**	**0.96**	**0.97**	**1.00**	**1.03**	**1.03**	**1.05**	**1.10**	**1.14**	**1.17**	**1.18**
1.578	45	4.511	71	7.118			6.49	8.41	9.68	10.47	11.26	12.85	14.43	14.90	16.01	19.17	22.32	25.48	26.11
1.579	38	3.810	60	6.015		6.36	7.96	9.86	11.13	11.92	12.71	14.29	15.87	16.34	17.44	20.60	23.75	26.91	27.54
1.591	22	2.206	35	3.509	8.09	9.66	11.24	13.14	14.40	15.18	15.97	17.54	19.12	19.60	20.70	23.85	27.00	30.15	30.78
1.595	42	4.211	67	6.717			7.06	8.97	10.24	11.03	11.82	13.40	14.98	15.46	16.56	19.72	22.88	26.03	26.66
1.600	25	2.506	40	4.010	7.44	9.03	10.61	12.50	13.76	14.55	15.33	16.91	18.49	18.96	20.06	23.22	26.37	29.52	30.15
1.600	30	3.008	48	4.812	6.39	7.98	9.57	11.46	12.73	13.51	14.30	15.88	17.45	17.93	19.03	22.18	25.34	28.49	29.12
1.600	35	3.509	56	5.614	5.33	6.93	8.52	10.42	11.69	12.48	13.26	14.84	16.42	16.90	18.00	21.15	24.31	27.46	28.09
1.600	50	5.013	80	8.020				7.25	8.53	9.33	10.12	11.71	13.30	13.78	14.88	18.05	21.21	24.36	24.99
1.606	33	3.308	53	5.314	5.74	7.33	8.92	10.82	12.09	12.87	13.66	15.24	16.82	17.29	18.40	21.55	24.70	27.86	28.49
1.607	28	2.807	45	4.511	6.80	8.38	9.97	11.86	13.12	13.91	14.70	16.28	17.85	18.33	19.43	22.58	25.73	28.88	29.52
1.607	56	5.614	90	9.023						8.01	8.81	10.41	12.00	12.48	13.59	16.76	19.93	23.09	23.72
1.613	31	3.108	50	5.013	6.15	7.74	9.32	11.22	12.49	13.27	14.06	15.64	17.22	17.69	18.79	21.95	25.10	28.25	28.88
1.615	26	2.607	42	4.211	7.20	8.78	10.36	12.26	13.52	14.31	15.09	16.67	18.25	18.72	19.82	22.98	26.13	29.28	29.91
1.615	39	3.910	63	6.316		6.02	7.62	9.53	10.80	11.59	12.38	13.96	15.54	16.02	17.12	20.28	23.43	26.59	27.22
1.622	37	3.709	60	6.015		6.43	8.03	9.94	11.20	11.99	12.78	14.36	15.94	16.42	17.52	20.68	23.83	26.98	27.61
1.634	41	4.110	67	6.717			7.13	9.04	10.31	11.10	11.90	13.48	15.06	15.54	16.64	19.80	22.95	26.11	26.74
1.636	22	2.206	36	3.609	8.00	9.58	11.16	13.05	14.32	15.10	15.89	17.46	19.04	19.52	20.62	23.77	26.92	30.07	30.70
1.640	25	2.506	41	4.110	7.36	8.94	10.52	12.42	13.68	14.47	15.25	16.83	18.41	18.88	19.98	23.13	26.29	29.44	30.07
1.647	34	3.409	56	5.614	5.40	7.00	8.59	10.50	11.76	12.55	13.34	14.92	16.50	16.97	18.07	21.23	24.38	27.54	28.17
1.655	29	2.907	48	4.812	6.47	8.06	9.64	11.54	12.80	13.59	14.38	15.95	17.53	18.01	19.11	22.26	25.41	28.57	29.20
1.656	32	3.208	53	5.314	5.81	7.41	9.00	10.90	12.16	12.95	13.74	15.32	16.89	17.37	18.47	21.63	24.78	27.93	28.56
1.658	38	3.810	63	6.316		6.09	7.69	9.61	10.87	11.66	12.45	14.04	15.62	16.09	17.20	20.35	23.51	26.66	27.29
1.667	27	2.707	45	4.511	6.87	8.46	10.04	11.94	13.20	13.99	14.77	16.35	17.93	18.40	19.51	22.66	25.81	28.96	29.59
1.667	30	3.008	50	5.013	6.22	7.81	9.40	11.30	12.56	13.35	14.13	15.71	17.29	17.77	18.87	22.02	25.18	28.33	28.96
1.667	36	3.609	60	6.015		6.50	8.10	10.01	11.28	12.07	12.85	14.44	16.02	16.49	17.60	20.75	23.91	27.06	27.69
1.667	45	4.511	75	7.519				8.05	9.33	10.12	10.92	12.51	14.09	14.57	15.67	18.84	22.00	25.15	25.78
1.667	48	4.812	80	8.020				7.39	8.67	9.47	10.27	11.86	13.45	13.92	15.03	18.20	21.36	24.51	25.15
1.672	67	6.717	112	11.229										9.74	10.87	14.07	17.25	20.43	21.06
1.675	40	4.010	67	6.717			7.20	9.11	10.39	11.18	11.97	13.55	15.13	15.61	16.72	19.87	23.03	26.19	26.82
1.680	25	2.506	42	4.211	7.27	8.86	10.44	12.34	13.60	14.38	15.17	16.75	18.32	18.80	19.90	23.05	26.21	29.36	29.99
1.682	22	2.206	37	3.709	7.92	9.50	11.08	12.97	14.23	15.02	15.81	17.38	18.96	19.43	20.54	23.69	26.84	29.99	30.62
1.690	42	4.211	71	7.118			6.69	8.62	9.90	10.69	11.48	13.07	14.65	15.13	16.23	19.39	22.55	25.71	26.34
1.697	33	3.308	56	5.614	5.47	7.07	8.67	10.57	11.84	12.62	13.41	14.99	16.57	17.05	18.15	21.31	24.46	27.61	28.24
1.698	53	5.314	90	9.023					7.41	8.21	9.02	10.62	12.22	12.70	13.81	16.98	20.15	23.31	23.94
1.703	37	3.709	63	6.316		6.16	7.77	9.68	10.95	11.74	12.53	14.11	15.69	16.17	17.27	20.43	23.59	26.74	27.37
1.710	31	3.108	53	5.314	5.88	7.48	9.07	10.97	12.24	13.02	13.81	15.39	16.97	17.45	18.55	21.70	24.86	28.01	28.64
1.714	28	2.807	48	4.812	6.54	8.13	9.71	11.61	12.88	13.66	14.45	16.03	17.61	18.08	19.18	22.34	25.49	28.64	29.27
1.714	35	3.509	60	6.015		6.58	8.17	10.08	11.35	12.14	12.93	14.51	16.09	16.57	17.67	20.83	23.98	27.14	27.77
1.718	39	3.910	67	6.717			7.27	9.19	10.46	11.25	12.04	13.63	15.21	15.69	16.79	19.95	23.11	26.26	26.89
1.724	29	2.907	50	5.013	6.29	7.88	9.47	11.37	12.64	13.42	14.21	15.79	17.37	17.84	18.95	22.10	25.25	28.41	29.04
1.727	22	2.206	38	3.810	7.83	9.42	11.00	12.89	14.15	14.94	15.72	17.30	18.88	19.35	20.45	23.61	26.76	29.91	30.54
1.731	26	2.607	45	4.511	6.94	8.53	10.11	12.01	13.28	14.06	14.85	16.43	18.00	18.48	19.58	22.73	25.89	29.04	29.67
1.732	41	4.110	71	7.118			6.76	8.69	9.97	10.76	11.55	13.14	14.72	15.20	16.31	19.47	22.63	25.78	26.41
1.750	32	3.208	56	5.614	5.54	7.14	8.74	10.64	11.91	12.70	13.49	15.07	16.65	17.12	18.23	21.38	24.54	27.69	28.32
1.750	36	3.609	63	6.316		6.23	7.84	9.75	11.02	11.81	12.60	14.19	15.77	16.24	17.35	20.51	23.66	26.82	27.45
1.750	80	8.020	140	14.036													13.84	17.06	17.70
1.763	38	3.810	67	6.717			7.34	9.26	10.53	11.32	12.11	13.70	15.28	15.76	16.86	20.02	23.18	26.34	26.97
1.765	34	3.409	60	6.015		6.65	8.25	10.15	11.42	12.21	13.00	14.59	16.17	16.64	17.75	20.90	24.06	27.21	27.84
1.767	30	3.008	53	5.314	5.95	7.55	9.14	11.04	12.31	13.10	13.89	15.47	17.04	17.52	18.62	21.78	24.93	28.09	28.72
1.773	22	2.206	39	3.910	7.75	9.33	10.91	12.81	14.07	14.86	15.64	17.22	18.80	19.27	20.37	23.53	26.68	29.83	30.46
1.775	40	4.010	71	7.118			6.83	8.76	10.04	10.83	11.63	13.21	14.80	15.28	16.38	19.54	22.70	25.86	26.49
1.778	27	2.707	48	4.812	6.61	8.20	9.79	11.69	12.95	13.74	14.53	16.11	17.68	18.16	19.26	22.41	25.57	28.72	29.35
1.778	45	4.511	80	8.020				7.59	8.88	9.68	10.48	12.08	13.67	14.14	15.25	18.42	21.58	24.74	25.37
1.778	63	6.316	112	11.229									9.52	10.01	11.14	14.35	17.54	20.72	21.35
1.786	28	2.807	50	5.013	6.36	7.96	9.54	11.44	12.71	13.50	14.29	15.86	17.44	17.92	19.02	22.18	25.33	28.48	29.11
1.786	42	4.211	75	7.519				8.26	9.54	10.34	11.13	12.72	14.31	14.79	15.90	19.06	22.22	25.38	26.01
1.800	25	2.506	45	4.511	7.02	8.61	10.19	12.09	13.35	14.14	14.93	16.50	18.08	18.56	19.66	22.81	25.96	29.12	29.75
1.800	35	3.509	63	6.316		6.30	7.91	9.82	11.09	11.89	12.68	14.26	15.84	16.32	17.42	20.58	23.74	26.89	27.52
1.800	50	5.013	90	9.023					7.61	8.42	9.23	10.84	12.43	12.92	14.03	17.20	20.37	23.54	24.17
1.806	31	3.108	56	5.614	5.61	7.22	8.81	10.72	11.98	12.77	13.56	15.14	16.72	17.20	18.30	21.46	24.61	27.77	28.40
1.811	37	3.709	67	6.717		5.79	7.41	9.33	10.60	11.40	12.19	13.77	15.36	15.83	16.94	20.10	23.26	26.41	27.04
1.818	22	2.206	40	4.010	7.66	9.25	10.83	12.73	13.99	14.78	15.56	17.14	18.72	19.19	20.29	23.45	26.60	29.75	30.38
1.818	33	3.308	60	6.015		6.72	8.32	10.23	11.50	12.29	13.08	14.66	16.24	16.72	17.82	20.98	24.13	27.29	27.92
1.821	39	3.910	71	7.118			6.90	8.83	10.11	10.91	11.70	13.29	14.87	15.35	16.46	19.62	22.78	25.93	26.57
1.828	29	2.907	53	5.314	6.02	7.62	9.21	11.12	12.38	13.17	13.96	15.54	17.12	17.60	18.70	21.86	25.01	28.16	28.79
1.829	41	4.110	75	7.519			6.39	8.33	9.62	10.41	11.21	12.80	14.39	14.86	15.97	19.14	22.30	25.45	26.09
1.846	26	2.607	48	4.812	6.68	8.27	9.86	11.76	13.03	13.81	14.60	16.18	17.76	18.23	19.34	22.49	25.64	28.80	29.43
1.852	27	2.707	50	5.013	6.43	8.03	9.62	11.52	12.78	13.57	14.36	15.94	17.52	17.99	19.10	22.25	25.41	28.56	29.19
1.853	34	3.409	63	6.316		6.37	7.98	9.90	11.17	11.96	12.75	14.33	15.92	16.39	17.50	20.66	23.81	26.97	27.60
1.861	36	3.609	67	6.717		5.86	7.48	9.40	10.68	11.47	12.26	13.85	15.43	15.91	17.01	20.18	23.33	26.49	27.12
1.864	22	2.206	41	4.110	7.58	9.16	10.75	12.64	13.91	14.69	15.48	17.06	18.64	19.11	20.21	23.37	26.52	29.67	30.30
1.867	30	3.008	56	5.614	5.68	7.29	8.88	10.79	12.06	12.85	13.64	15.22	16.80	17.27	18.38	21.53	24.69	27.84	28.47
1.867	60	6.015	112	11.229									9.73	10.22	11.35	14.57	17.76	20.94	21.57
1.867	75	7.519	140	14.036													14.19	17.41	18.05
1.868	38	3.810	71	7.118			6.97	8.90	10.18	10.98	11.77	13.36	14.95	15.42	16.53	19.69	22.85	26.01	26.64
1.875	32	3.208	60	6.015	5.16	6.79	8.39	10.30	11.57	12.36	13.15	14.73	16.32	16.79	17.90	21.05	24.21	27.37	28.00
1.875	40	4.010	75	7.519			6.46	8.40	9.69	10.48	11.28	12.87	14.46	14.94	16.04	19.21	22.37	25.53	26.16
1.875	48	4.812	90	9.023					7.75	8.56	9.37	10.98	12.58	13.06	14.17	17.35	20.52	23.69	24.32
Length factor*					**0.79**	**0.83**	**0.87**	**0.91**	**0.94**	**0.96**	**0.97**	**1.00**	**1.03**	**1.03**	**1.05**	**1.10**	**1.14**	**1.17**	**1.18**

* The length correction factor must be used to determine the proper belt width.

Selection program available online at ptwizard.com and passport.baldor.com

HT500 selection table – 8mm pitch HT500 belts (continued)

Speed ratio	Sprocket combinations				Center distance, inches														
	Driver		Driven																
	No. of teeth	Pitch dia. inches	No. of teeth	Pitch dia. inches	2000-8MX	2200-8MX	2240-8MX	2400-8MX	2520-8MX	2600-8MX	2800-8MX	2840-8MX	3048-8MX	3200-8MX	3280-8MX	3600-8MX	4000-8MX	4400-8MX	4480-8MX
Length factor*					**1.22**	**1.26**	**1.26**	**1.29**	**1.31**	**1.32**	**1.35**	**1.36**	**1.38**	**1.40**	**1.41**	**1.45**	**1.49**	**1.52**	**1.53**
1.578	45	4.511	71	7.118	30.21	34.15	34.94	38.09	40.45	42.03	45.97	46.75	50.85	53.84	55.42	61.72	69.59	77.47	79.05
1.579	38	3.810	60	6.015	31.63	35.57	36.36	39.51	41.87	43.45	47.39	48.18	52.27	55.26	56.84	63.14	71.01	78.89	80.47
1.591	22	2.206	35	3.509	34.88	38.81	39.60	42.75	45.11	46.69	50.63	51.41	55.51	58.50	60.07	66.37	74.25	82.12	83.70
1.595	42	4.211	67	6.717	30.76	34.70	35.49	38.64	41.00	42.58	46.52	47.31	51.40	54.39	55.97	62.27	70.15	78.02	79.60
1.600	25	2.506	40	4.010	34.24	38.18	38.97	42.12	44.48	46.06	50.00	50.78	54.88	57.87	59.44	65.74	73.62	81.49	83.07
1.600	30	3.008	48	4.812	33.22	37.15	37.94	41.09	43.45	45.03	48.97	49.76	53.85	56.84	58.42	64.72	72.59	80.47	82.04
1.600	35	3.509	56	5.614	32.19	36.12	36.91	40.07	42.43	44.00	47.94	48.73	52.82	55.81	57.39	63.69	71.57	79.44	81.02
1.600	50	5.013	80	8.020	29.10	33.03	33.83	36.98	39.34	40.92	44.86	45.64	49.74	52.73	54.31	60.61	68.49	76.36	77.94
1.606	33	3.308	53	5.314	32.58	36.52	37.31	40.46	42.82	44.40	48.34	49.12	53.22	56.21	57.78	64.09	71.96	79.84	81.41
1.607	28	2.807	45	4.511	33.61	37.55	38.34	41.49	43.85	45.42	49.37	50.15	54.25	57.24	58.81	65.11	72.99	80.86	82.44
1.607	56	5.614	90	9.023	27.82	31.76	32.55	35.71	38.07	39.65	43.59	44.38	48.47	51.47	53.04	59.34	67.22	75.10	76.68
1.613	31	3.108	50	5.013	32.98	36.91	37.70	40.86	43.22	44.79	48.73	49.52	53.61	56.60	58.18	64.48	72.36	80.23	81.81
1.615	26	2.607	42	4.211	34.01	37.94	38.73	41.88	44.24	45.82	49.76	50.54	54.64	57.63	59.20	65.51	73.38	81.26	82.83
1.615	39	3.910	63	6.316	31.32	35.25	36.04	39.20	41.56	43.13	47.07	47.86	51.95	54.95	56.52	62.82	70.70	78.57	80.15
1.622	37	3.709	60	6.015	31.71	35.65	36.44	39.59	41.95	43.53	47.47	48.25	52.35	55.34	56.92	63.22	71.09	78.97	80.54
1.634	41	4.110	67	6.717	30.84	34.78	35.57	38.72	41.08	42.66	46.60	47.38	51.48	54.47	56.05	62.35	70.22	78.10	79.68
1.636	22	2.206	36	3.609	34.80	38.73	39.52	42.67	45.03	46.61	50.55	51.33	55.43	58.42	59.99	66.29	74.17	82.04	83.62
1.640	25	2.506	41	4.110	34.16	38.10	38.89	42.04	44.40	45.98	49.92	50.70	54.80	57.79	59.36	65.66	73.54	81.41	82.99
1.647	34	3.409	56	5.614	32.26	36.20	36.99	40.14	42.50	44.08	48.02	48.81	52.90	55.89	57.47	63.77	71.64	79.52	81.10
1.655	29	2.907	48	4.812	33.29	37.23	38.02	41.17	43.53	45.11	49.05	49.83	53.93	56.92	58.49	64.80	72.67	80.55	82.12
1.656	32	3.208	53	5.314	32.66	36.60	37.39	40.54	42.90	44.47	48.42	49.20	53.30	56.29	57.86	64.16	72.04	79.91	81.49
1.658	38	3.810	63	6.316	31.39	35.33	36.12	39.27	41.63	43.21	47.15	47.94	52.03	55.02	56.60	62.90	70.78	78.65	80.23
1.667	27	2.707	45	4.511	33.69	37.63	38.42	41.57	43.93	45.50	49.44	50.23	54.32	57.31	58.89	65.19	73.07	80.94	82.52
1.667	30	3.008	50	5.013	33.06	36.99	37.78	40.93	43.29	44.87	48.81	49.60	53.69	56.68	58.26	64.56	72.43	80.31	81.88
1.667	36	3.609	60	6.015	31.79	35.73	36.52	39.67	42.03	43.60	47.55	48.33	52.43	55.42	56.99	63.29	71.17	79.05	80.62
1.667	45	4.511	75	7.519	29.88	33.82	34.61	37.77	40.13	41.70	45.65	46.43	50.53	53.52	55.10	61.40	69.28	77.15	78.73
1.667	48	4.812	80	8.020	29.25	33.19	33.98	37.13	39.49	41.07	45.01	45.80	49.90	52.89	54.46	60.77	68.64	76.52	78.10
1.672	67	6.717	112	11.229	25.17	29.12	29.92	33.07	35.44	37.02	40.96	41.75	45.85	48.84	50.42	56.73	64.61	72.49	74.06
1.675	40	4.010	67	6.717	30.92	34.85	35.64	38.80	41.16	42.73	46.68	47.46	51.56	54.55	56.12	62.43	70.30	78.18	79.75
1.680	25	2.506	42	4.211	34.08	38.02	38.81	41.96	44.32	45.90	49.84	50.62	54.72	57.71	59.28	65.58	73.46	81.34	82.91
1.682	22	2.206	37	3.709	34.72	38.65	39.44	42.59	44.95	46.53	50.47	51.25	55.35	58.34	59.91	66.22	74.09	81.97	83.54
1.690	42	4.211	71	7.118	30.44	34.38	35.17	38.32	40.68	42.26	46.20	46.98	51.08	54.07	55.65	61.95	69.83	77.70	79.28
1.697	33	3.308	56	5.614	32.34	36.28	37.07	40.22	42.58	44.16	48.10	48.88	52.98	55.97	57.55	63.85	71.72	79.60	81.17
1.698	53	5.314	90	9.023	28.05	31.99	32.78	35.94	38.30	39.88	43.82	44.61	48.70	51.70	53.27	59.58	67.45	75.33	76.91
1.703	37	3.709	63	6.316	31.47	35.41	36.20	39.35	41.71	43.29	47.23	48.01	52.11	55.10	56.68	62.98	70.85	78.73	80.31
1.710	31	3.108	53	5.314	32.74	36.67	37.46	40.62	42.98	44.55	48.49	49.28	53.37	56.36	57.94	64.24	72.12	79.99	81.57
1.714	28	2.807	48	4.812	33.37	37.31	38.10	41.25	43.61	45.18	49.13	49.91	54.01	57.00	58.57	64.87	72.75	80.62	82.20
1.714	35	3.509	60	6.015	31.87	35.80	36.59	39.75	42.11	43.68	47.62	48.41	52.50	55.50	57.07	63.37	71.25	79.12	80.70
1.718	39	3.910	67	6.717	30.99	34.93	35.72	38.87	41.23	42.81	46.75	47.54	51.63	54.63	56.20	62.50	70.38	78.26	79.83
1.724	29	2.907	50	5.013	33.13	37.07	37.86	41.01	43.37	44.95	48.89	49.67	53.77	56.76	58.34	64.64	72.51	80.39	81.96
1.727	22	2.206	38	3.810	34.64	38.57	39.36	42.51	44.87	46.45	50.39	51.17	55.27	58.26	59.83	66.14	74.01	81.89	83.46
1.731	26	2.607	45	4.511	33.77	37.70	38.49	41.64	44.00	45.58	49.52	50.31	54.40	57.39	58.97	65.27	73.14	81.02	82.59
1.732	41	4.110	71	7.118	30.51	34.45	35.24	38.40	40.76	42.33	46.28	47.06	51.16	54.15	55.73	62.03	69.91	77.78	79.36
1.750	32	3.208	56	5.614	32.42	36.36	37.15	40.30	42.66	44.23	48.18	48.96	53.06	56.05	57.62	63.92	71.80	79.68	81.25
1.750	36	3.609	63	6.316	31.55	35.48	36.27	39.43	41.79	43.36	47.31	48.09	52.19	55.18	56.75	63.06	70.93	78.81	80.38
1.750	80	8.020	140	14.036	21.84	25.81	26.60	29.77	32.14	33.72	37.68	38.46	42.57	45.57	47.15	53.46	61.34	69.23	70.80
1.763	38	3.810	67	6.717	31.07	35.01	35.80	38.95	41.31	42.89	46.83	47.61	51.71	54.70	56.28	62.58	70.46	78.33	79.91
1.765	34	3.409	60	6.015	31.94	35.88	36.67	39.82	42.18	43.76	47.70	48.49	52.58	55.57	57.15	63.45	71.33	79.20	80.78
1.767	30	3.008	53	5.314	32.81	36.75	37.54	40.69	43.05	44.63	48.57	49.36	53.45	56.44	58.02	64.32	72.19	80.07	81.65
1.773	22	2.206	39	3.910	34.56	38.49	39.28	42.43	44.79	46.37	50.31	51.09	55.19	58.18	59.76	66.06	73.93	81.81	83.38
1.775	40	4.010	71	7.118	30.59	34.53	35.32	38.47	40.84	42.41	46.35	47.14	51.24	54.23	55.80	62.11	69.98	77.86	79.43
1.778	27	2.707	48	4.812	33.45	37.38	38.18	41.33	43.69	45.26	49.20	49.99	54.08	57.07	58.65	64.95	72.83	80.70	82.28
1.778	45	4.511	80	8.020	29.48	33.42	34.21	37.36	39.72	41.30	45.24	46.03	50.13	53.12	54.70	61.00	68.88	76.75	78.33
1.778	63	6.316	112	11.229	25.47	29.42	30.22	33.37	35.74	37.32	41.27	42.05	46.15	49.15	50.73	57.03	64.91	72.79	74.37
1.786	28	2.807	50	5.013	33.21	37.15	37.94	41.09	43.45	45.02	48.97	49.75	53.85	56.84	58.41	64.71	72.59	80.47	82.04
1.786	42	4.211	75	7.519	30.11	34.05	34.84	38.00	40.36	41.93	45.88	46.66	50.76	53.75	55.33	61.63	69.51	77.38	78.96
1.800	25	2.506	45	4.511	33.84	37.78	38.57	41.72	44.08	45.66	49.60	50.38	54.48	57.47	59.05	65.35	73.22	81.10	82.67
1.800	35	3.509	63	6.316	31.62	35.56	36.35	39.50	41.86	43.44	47.38	48.17	52.26	55.26	56.83	63.13	71.01	78.89	80.46
1.800	50	5.013	90	9.023	28.28	32.22	33.01	36.17	38.53	40.11	44.05	44.84	48.94	51.93	53.50	59.81	67.69	75.56	77.14
1.806	31	3.108	56	5.614	32.50	36.43	37.22	40.38	42.74	44.31	48.25	49.04	53.13	56.13	57.70	64.00	71.88	79.75	81.33
1.811	37	3.709	67	6.717	31.15	35.08	35.87	39.03	41.39	42.97	46.91	47.69	51.79	54.78	56.36	62.66	70.54	78.41	79.99
1.818	22	2.206	40	4.010	34.48	38.41	39.20	42.35	44.71	46.29	50.23	51.01	55.11	58.10	59.68	65.98	73.85	81.73	83.30
1.818	33	3.308	60	6.015	32.02	35.96	36.75	39.90	42.26	43.84	47.78	48.56	52.66	55.65	57.23	63.53	71.40	79.28	80.86
1.821	39	3.910	71	7.118	30.67	34.61	35.40	38.55	40.91	42.49	46.43	47.22	51.31	54.30	55.88	62.18	70.06	77.94	79.51
1.828	29	2.907	53	5.314	32.89	36.83	37.62	40.77	43.13	44.71	48.65	49.43	53.53	56.52	58.10	64.40	72.27	80.15	81.72
1.829	41	4.110	75	7.519	30.19	34.13	34.92	38.07	40.44	42.01	45.95	46.74	50.84	53.83	55.41	61.71	69.59	77.46	79.04
1.846	26	2.607	48	4.812	33.53	37.46	38.25	41.40	43.76	45.34	49.28	50.07	54.16	57.15	58.73	65.03	72.90	80.78	82.36
1.852	27	2.707	50	5.013	33.29	37.22	38.01	41.17	43.53	45.10	49.04	49.83	53.92	56.92	58.49	64.79	72.67	80.54	82.12
1.853	34	3.409	63	6.316	31.70	35.64	36.43	39.58	41.94	43.52	47.46	48.25	52.34	55.33	56.91	63.21	71.09	78.96	80.54
1.861	36	3.609	67	6.717	31.22	35.16	35.95	39.10	41.47	43.04	46.98	47.77	51.87	54.86	56.43	62.74	70.61	78.49	80.06
1.864	22	2.206	41	4.110	34.40	38.33	39.12	42.27	44.63	46.21	50.15	50.94	55.03	58.02	59.60	65.90	73.77	81.65	83.22
1.867	30	3.008	56	5.614	32.57	36.51	37.30	40.45	42.81	44.39	48.33	49.12	53.21	56.20	57.78	64.08	71.96	79.83	81.41
1.867	60	6.015	112	11.229	25.69	29.65	30.44	33.60	35.97	37.55	41.49	42.28	46.38	49.38	50.95	57.26	65.14	73.03	74.60
1.867	75	7.519	140	14.036	22.20	26.17	26.97	30.14	32.51	34.09	38.05	38.84	42.95	45.95	47.52	53.84	61.72	69.61	71.19
1.868	38	3.810	71	7.118	30.74	34.68	35.47	38.63	40.99	42.57	46.51	47.29	51.39	54.38	55.96	62.26	70.14	78.01	79.59
1.875	32	3.208	60	6.015	32.10	36.03	36.82	39.98	42.34	43.91	47.86	48.64	52.74	55.73	57.30	63.61	71.48	79.36	80.93
1.875	40	4.010	75	7.519	30.26	34.21	35.00	38.15	40.51	42.09	46.03	46.82	50.91	53.91	55.48	61.79	69.66	77.54	79.12
1.875	48	4.812	90	9.023	28.43	32.37	33.16	36.32	38.68	40.26	44.20	44.99	49.09	52.08	53.66	59.96	67.84	75.72	77.30
Length factor*					**1.22**	**1.26**	**1.26**	**1.29**	**1.31**	**1.32**	**1.35**	**1.36**	**1.38**	**1.40**	**1.41**	**1.45**	**1.49**	**1.52**	**1.53**

Center distance is greater than eight times the small sprocket and the large sprocket is not flanged. See Engineering Section for details.

* The length correction factor must be used to determine the proper belt width.

Selection program available online at ptwizard.com and passport.baldor.com

HT500 selection table – 8mm pitch HT500 belts

Speed ratio	Sprocket combinations: Driver No. of teeth	Driver Pitch dia. inches	Driven No. of teeth	Driven Pitch dia. inches	Center distance, inches: 640-8MX	720-8MX	800-8MX	896-8MX	960-8MX	1000-8MX	1040-8MX	1120-8MX	1200-8MX	1224-8MX	1280-8MX	1440-8MX	1600-8MX	1760-8MX	1792-8MX
Length factor*					**0.79**	**0.83**	**0.87**	**0.91**	**0.94**	**0.96**	**0.97**	**1.00**	**1.03**	**1.03**	**1.05**	**1.10**	**1.14**	**1.17**	**1.18**
1.893	28	2.807	53	5.314	6.09	7.69	9.29	11.19	12.46	13.25	14.04	15.62	17.20	17.67	18.77	21.93	25.09	28.24	28.87
1.905	42	4.211	80	8.020				7.80	9.09	9.89	10.69	12.29	13.88	14.36	15.47	18.64	21.81	24.97	25.60
1.909	22	2.206	42	4.211	7.49	9.08	10.66	12.56	13.82	14.61	15.40	16.98	18.55	19.03	20.13	23.28	26.44	29.59	30.22
1.909	33	3.308	63	6.316		6.44	8.05	9.97	11.24	12.03	12.82	14.41	15.99	16.47	17.57	20.73	23.89	27.04	27.68
1.914	35	3.509	67	6.717		5.93	7.55	9.47	10.75	11.54	12.33	13.92	15.51	15.98	17.09	20.25	23.41	26.57	27.20
1.919	37	3.709	71	7.118			7.04	8.97	10.25	11.05	11.84	13.43	15.02	15.50	16.60	19.77	22.93	26.09	26.72
1.920	25	2.506	48	4.812	6.75	8.35	9.94	11.84	13.10	13.89	14.68	16.26	17.84	18.31	19.41	22.57	25.72	28.87	29.50
1.923	26	2.607	50	5.013	6.50	8.10	9.69	11.59	12.86	13.65	14.44	16.02	17.59	18.07	19.17	22.33	25.48	28.63	29.27
1.923	39	3.910	75	7.519			6.52	8.47	9.76	10.55	11.35	12.94	14.53	15.01	16.12	19.28	22.45	25.61	26.24
1.931	29	2.907	56	5.614	5.75	7.36	8.96	10.86	12.13	12.92	13.71	15.29	16.87	17.35	18.45	21.61	24.77	27.92	28.55
1.935	31	3.108	60	6.015	5.23	6.86	8.46	10.37	11.64	12.43	13.22	14.81	16.39	16.87	17.97	21.13	24.29	27.44	28.07
1.951	41	4.110	80	8.020				7.87	9.16	9.97	10.77	12.36	13.96	14.44	15.55	18.72	21.88	25.04	25.67
1.963	27	2.707	53	5.314	6.16	7.77	9.36	11.26	12.53	13.32	14.11	15.69	17.27	17.75	18.85	22.01	25.16	28.32	28.95
1.969	32	3.208	63	6.316		6.51	8.12	10.04	11.31	12.10	12.90	14.48	16.06	16.54	17.65	20.81	23.96	27.12	27.75
1.971	34	3.409	67	6.717		5.99	7.62	9.54	10.82	11.61	12.41	13.99	15.58	16.06	17.16	20.32	23.48	26.64	27.27
1.972	36	3.609	71	7.118			7.11	9.04	10.33	11.12	11.92	13.51	15.09	15.57	16.68	19.84	23.00	26.16	26.79
1.972	71	7.118	140	14.036												11.19	14.47	17.69	18.33
1.974	38	3.810	75	7.519			6.59	8.54	9.83	10.62	11.42	13.01	14.60	15.08	16.19	19.36	22.52	25.68	26.31
2.000	25	2.506	50	5.013	6.57	8.17	9.76	11.67	12.93	13.72	14.51	16.09	17.67	18.15	19.25	22.40	25.56	28.71	29.34
2.000	28	2.807	56	5.614	5.82	7.43	9.03	10.94	12.21	13.00	13.78	15.37	16.95	17.42	18.53	21.69	24.84	28.00	28.63
2.000	30	3.008	60	6.015	5.30	6.92	8.53	10.44	11.72	12.51	13.30	14.88	16.46	16.94	18.05	21.21	24.36	27.52	28.15
2.000	40	4.010	80	8.020				7.94	9.23	10.04	10.84	12.43	14.03	14.51	15.62	18.79	21.96	25.12	25.75
2.000	45	4.511	90	9.023					7.95	8.76	9.57	11.19	12.79	13.27	14.39	17.57	20.74	23.91	24.54
2.000	56	5.614	112	11.229									9.99	10.49	11.63	14.85	18.05	21.23	21.87
2.027	37	3.709	75	7.519			6.66	8.61	9.90	10.70	11.49	13.09	14.68	15.16	16.26	19.43	22.60	25.76	26.39
2.029	35	3.509	71	7.118			7.18	9.11	10.40	11.19	11.99	13.58	15.17	15.64	16.75	19.92	23.08	26.24	26.87
2.030	33	3.308	67	6.717		6.06	7.69	9.61	10.89	11.69	12.48	14.07	15.65	16.13	17.24	20.40	23.56	26.72	27.35
2.032	31	3.108	63	6.316		6.58	8.19	10.11	11.39	12.18	12.97	14.55	16.14	16.62	17.72	20.88	24.04	27.20	27.83
2.038	26	2.607	53	5.314	6.23	7.84	9.43	11.34	12.61	13.40	14.18	15.77	17.35	17.82	18.93	22.08	25.24	28.39	29.02
2.045	22	2.206	45	4.511	7.23	8.82	10.41	12.31	13.58	14.36	15.15	16.73	18.31	18.78	19.89	23.04	26.19	29.35	29.98
2.051	39	3.910	80	8.020				8.00	9.30	10.11	10.91	12.51	14.10	14.58	15.69	18.86	22.03	25.19	25.82
2.069	29	2.907	60	6.015	5.37	6.99	8.60	10.52	11.79	12.58	13.37	14.96	16.54	17.02	18.12	21.28	24.44	27.59	28.22
2.074	27	2.707	56	5.614	5.88	7.50	9.10	11.01	12.28	13.07	13.86	15.44	17.02	17.50	18.60	21.76	24.92	28.07	28.70
2.083	36	3.609	75	7.519			6.72	8.68	9.97	10.77	11.56	13.16	14.75	15.23	16.34	19.51	22.67	25.83	26.46
2.088	34	3.409	71	7.118			7.24	9.18	10.47	11.26	12.06	13.65	15.24	15.72	16.82	19.99	23.15	26.31	26.94
2.090	67	6.717	140	14.036												11.46	14.74	17.97	18.61
2.094	32	3.208	67	6.717		6.13	7.76	9.69	10.96	11.76	12.55	14.14	15.73	16.20	17.31	20.47	23.63	26.79	27.42
2.100	30	3.008	63	6.316		6.65	8.26	10.18	11.46	12.25	13.04	14.63	16.21	16.69	17.80	20.96	24.12	27.27	27.90
2.105	38	3.810	80	8.020				8.07	9.37	10.18	10.98	12.58	14.17	14.65	15.76	18.94	22.10	25.27	25.90
2.113	53	5.314	112	11.229									10.20	10.69	11.83	15.06	18.26	21.45	22.08
2.120	25	2.506	53	5.314	6.30	7.91	9.50	11.41	12.68	13.47	14.26	15.84	17.42	17.90	19.00	22.16	25.31	28.47	29.10
2.143	28	2.807	60	6.015	5.43	7.06	8.67	10.59	11.86	12.65	13.45	15.03	16.61	17.09	18.20	21.36	24.51	27.67	28.30
2.143	35	3.509	75	7.519			6.79	8.75	10.04	10.84	11.64	13.23	14.82	15.30	16.41	19.58	22.75	25.91	26.54
2.143	42	4.211	90	9.023					8.15	8.97	9.78	11.40	13.00	13.49	14.60	17.79	20.96	24.13	24.76
2.152	33	3.308	71	7.118			7.31	9.25	10.54	11.34	12.13	13.72	15.31	15.79	16.90	20.07	23.23	26.39	27.02
2.154	26	2.607	56	5.614	5.95	7.57	9.17	11.08	12.35	13.14	13.93	15.52	17.10	17.57	18.68	21.84	24.99	28.15	28.78
2.161	31	3.108	67	6.717		6.19	7.82	9.76	11.04	11.83	12.62	14.21	15.80	16.28	17.38	20.55	23.71	26.87	27.50
2.162	37	3.709	80	8.020				8.14	9.44	10.25	11.05	12.65	14.24	14.73	15.84	19.01	22.18	25.34	25.97
2.172	29	2.907	63	6.316		6.71	8.33	10.25	11.53	12.32	13.12	14.70	16.29	16.76	17.87	21.03	24.19	27.35	27.98
2.182	22	2.206	48	4.812	6.97	8.56	10.15	12.06	13.32	14.11	14.90	16.48	18.06	18.54	19.64	22.80	25.95	29.10	29.73
2.195	41	4.110	90	9.023				6.88	8.22	9.03	9.85	11.47	13.07	13.56	14.67	17.86	21.04	24.21	24.84
2.206	34	3.409	75	7.519			6.86	8.82	10.11	10.91	11.71	13.30	14.90	15.37	16.48	19.65	22.82	25.98	26.61
2.219	32	3.208	71	7.118		5.73	7.38	9.32	10.61	11.41	12.20	13.80	15.39	15.86	16.97	20.14	23.30	26.46	27.09
2.222	27	2.707	60	6.015	5.50	7.13	8.74	10.66	11.93	12.73	13.52	15.10	16.69	17.17	18.27	21.43	24.59	27.75	28.38
2.222	36	3.609	80	8.020				8.21	9.51	10.31	11.12	12.72	14.32	14.80	15.91	19.08	22.25	25.42	26.05
2.222	63	6.316	140	14.036												11.72	15.01	18.25	18.89
2.233	30	3.008	67	6.717		6.26	7.89	9.83	11.11	11.90	12.70	14.29	15.87	16.35	17.46	20.62	23.78	26.94	27.57
2.240	25	2.506	56	5.614	6.02	7.64	9.24	11.15	12.43	13.22	14.01	15.59	17.17	17.65	18.75	21.91	25.07	28.22	28.86
2.240	50	5.013	112	11.229								8.73	10.40	10.89	12.03	15.27	18.48	21.67	22.30
2.250	28	2.807	63	6.316	5.13	6.78	8.40	10.33	11.60	12.40	13.19	14.78	16.36	16.84	17.94	21.11	24.27	27.42	28.05
2.250	40	4.010	90	9.023				6.95	8.28	9.10	9.92	11.54	13.14	13.63	14.75	17.93	21.11	24.28	24.91
2.250	80	8.020	180	18.046															13.89
2.273	22	2.206	50	5.013	6.78	8.39	9.98	11.89	13.16	13.94	14.73	16.31	17.90	18.37	19.47	22.63	25.79	28.94	29.57
2.273	33	3.308	75	7.519			6.92	8.89	10.18	10.98	11.78	13.38	14.97	15.45	16.56	19.73	22.89	26.06	26.69
2.286	35	3.509	80	8.020			6.29	8.28	9.58	10.38	11.19	12.79	14.39	14.87	15.98	19.16	22.33	25.49	26.12
2.290	31	3.108	71	7.118		5.79	7.45	9.39	10.68	11.48	12.27	13.87	15.46	15.94	17.05	20.21	23.38	26.54	27.17
2.308	26	2.607	60	6.015	5.57	7.20	8.81	10.73	12.01	12.80	13.59	15.18	16.76	17.24	18.34	21.51	24.66	27.82	28.45
2.308	39	3.910	90	9.023				7.01	8.35	9.17	9.98	11.60	13.21	13.70	14.82	18.01	21.18	24.35	24.99
2.310	29	2.907	67	6.717		6.33	7.96	9.90	11.18	11.97	12.77	14.36	15.95	16.43	17.53	20.70	23.86	27.02	27.65
2.333	27	2.707	63	6.316	5.20	6.85	8.47	10.40	11.67	12.47	13.26	14.85	16.43	16.91	18.02	21.18	24.34	27.50	28.13
2.333	48	4.812	112	11.229								8.86	10.53	11.03	12.17	15.41	18.62	21.81	22.45
2.333	60	6.015	140	14.036												11.92	15.22	18.46	19.10
2.344	32	3.208	75	7.519			6.99	8.95	10.25	11.05	11.85	13.45	15.04	15.52	16.63	19.80	22.97	26.13	26.76
2.353	34	3.409	80	8.020			6.35	8.34	9.65	10.45	11.26	12.86	14.46	14.94	16.05	19.23	22.40	25.56	26.20
2.367	30	3.008	71	7.118		5.86	7.51	9.46	10.75	11.55	12.35	13.94	15.53	16.01	17.12	20.29	23.45	26.61	27.24
2.368	38	3.810	90	9.023				7.08	8.41	9.24	10.05	11.67	13.28	13.77	14.89	18.08	21.26	24.43	25.06
2.393	28	2.807	67	6.717		6.39	8.03	9.97	11.25	12.05	12.84	14.43	16.02	16.50	17.61	20.77	23.93	27.09	27.73
Length factor*					**0.79**	**0.83**	**0.87**	**0.91**	**0.94**	**0.96**	**0.97**	**1.00**	**1.03**	**1.03**	**1.05**	**1.10**	**1.14**	**1.17**	**1.18**

* The length correction factor must be used to determine the proper belt width.

Selection program available online at ptwizard.com and passport.baldor.com

HT500 selection table – 8mm pitch HT500 belts (continued)

Speed ratio	Sprocket combinations				Center distance, inches														
	Driver		Driven																
	No. of teeth	Pitch dia. inches	No. of teeth	Pitch dia. inches	2000-8MX	2200-8MX	2240-8MX	2400-8MX	2520-8MX	2600-8MX	2800-8MX	2840-8MX	3048-8MX	3200-8MX	3280-8MX	3600-8MX	4000-8MX	4400-8MX	4480-8MX
Length factor*					**1.22**	**1.26**	**1.26**	**1.29**	**1.31**	**1.32**	**1.35**	**1.36**	**1.38**	**1.40**	**1.41**	**1.45**	**1.49**	**1.52**	**1.53**
1.893	28	2.807	53	5.314	32.97	36.91	37.70	40.85	43.21	44.78	48.73	49.51	53.61	56.60	58.17	64.47	72.35	80.23	81.80
1.905	42	4.211	80	8.020	29.70	33.64	34.44	37.59	39.95	41.53	45.47	46.26	50.36	53.35	54.93	61.23	69.11	76.99	78.56
1.909	22	2.206	42	4.211	34.32	38.25	39.04	42.19	44.55	46.13	50.07	50.86	54.95	57.94	59.52	65.82	73.69	81.57	83.14
1.909	33	3.308	63	6.316	31.78	35.71	36.51	39.66	42.02	43.60	47.54	48.32	52.42	55.41	56.99	63.29	71.17	79.04	80.62
1.914	35	3.509	67	6.717	31.30	35.24	36.03	39.18	41.54	43.12	47.06	47.85	51.94	54.94	56.51	62.81	70.69	78.57	80.14
1.919	37	3.709	71	7.118	30.82	34.76	35.55	38.70	41.07	42.64	46.59	47.37	51.47	54.46	56.04	62.34	70.22	78.09	79.67
1.920	25	2.506	48	4.812	33.60	37.54	38.33	41.48	43.84	45.42	49.36	50.14	54.24	57.23	58.81	65.11	72.98	80.86	82.43
1.923	26	2.607	50	5.013	33.36	37.30	38.09	41.24	43.60	45.18	49.12	49.91	54.00	56.99	58.57	64.87	72.75	80.62	82.20
1.923	39	3.910	75	7.519	30.34	34.28	35.07	38.23	40.59	42.17	46.11	46.89	50.99	53.98	55.56	61.86	69.74	77.62	79.19
1.931	29	2.907	56	5.614	32.65	36.59	37.38	40.53	42.89	44.47	48.41	49.19	53.29	56.28	57.86	64.16	72.03	79.91	81.49
1.935	31	3.108	60	6.015	32.17	36.11	36.90	40.05	42.41	43.99	47.93	48.72	52.81	55.81	57.38	63.68	71.56	79.44	81.01
1.951	41	4.110	80	8.020	29.78	33.72	34.51	37.67	40.03	41.61	45.55	46.34	50.44	53.43	55.00	61.31	69.19	77.06	78.64
1.963	27	2.707	53	5.314	33.04	36.98	37.77	40.92	43.29	44.86	48.80	49.59	53.68	56.68	58.25	64.55	72.43	80.30	81.88
1.969	32	3.208	63	6.316	31.85	35.79	36.58	39.73	42.10	43.67	47.61	48.40	52.50	55.49	57.06	63.37	71.24	79.12	80.69
1.971	34	3.409	67	6.717	31.37	35.31	36.10	39.26	41.62	43.20	47.14	47.92	52.02	55.01	56.59	62.89	70.77	78.64	80.22
1.972	36	3.609	71	7.118	30.90	34.84	35.63	38.78	41.14	42.72	46.66	47.45	51.55	54.54	56.11	62.42	70.29	78.17	79.75
1.972	71	7.118	140	14.036	22.49	26.46	27.26	30.43	32.81	34.39	38.35	39.14	43.25	46.25	47.83	54.14	62.03	69.92	71.49
1.974	38	3.810	75	7.519	30.42	34.36	35.15	38.30	40.66	42.24	46.18	46.97	51.07	54.06	55.64	61.94	69.82	77.70	79.27
2.000	25	2.506	50	5.013	33.44	37.38	38.17	41.32	43.68	45.26	49.20	49.98	54.08	57.07	58.65	64.95	72.82	80.70	82.28
2.000	28	2.807	56	5.614	32.73	36.66	37.45	40.61	42.97	44.54	48.49	49.27	53.37	56.36	57.93	64.24	72.11	79.99	81.56
2.000	30	3.008	60	6.015	32.25	36.19	36.98	40.13	42.49	44.07	48.01	48.80	52.89	55.88	57.46	63.76	71.64	79.51	81.09
2.000	40	4.010	80	8.020	29.85	33.80	34.59	37.74	40.11	41.68	45.63	46.41	50.51	53.50	55.08	61.38	69.26	77.14	78.72
2.000	45	4.511	90	9.023	28.65	32.60	33.39	36.55	38.91	40.49	44.43	45.22	49.32	52.31	53.89	60.19	68.07	75.95	77.53
2.000	56	5.614	112	11.229	25.99	29.94	30.74	33.90	36.27	37.85	41.80	42.58	46.69	49.68	51.26	57.57	65.45	73.33	74.91
2.027	37	3.709	75	7.519	30.49	34.43	35.23	38.38	40.74	42.32	46.26	47.05	51.15	54.14	55.71	62.02	69.90	77.77	79.35
2.029	35	3.509	71	7.118	30.97	34.91	35.70	38.86	41.22	42.80	46.74	47.52	51.62	54.61	56.19	62.49	70.37	78.25	79.82
2.030	33	3.308	67	6.717	31.45	35.39	36.18	39.33	41.70	43.27	47.22	48.00	52.10	55.09	56.67	62.97	70.85	78.72	80.30
2.032	31	3.108	63	6.316	31.93	35.87	36.66	39.81	42.17	43.75	47.69	48.48	52.57	55.57	57.14	63.44	71.32	79.20	80.77
2.038	26	2.607	53	5.314	33.12	37.06	37.85	41.00	43.36	44.94	48.88	49.67	53.76	56.75	58.33	64.63	72.51	80.38	81.96
2.045	22	2.206	45	4.511	34.07	38.01	38.80	41.95	44.31	45.89	49.83	50.62	54.71	57.70	59.28	65.58	73.46	81.33	82.91
2.051	39	3.910	80	8.020	29.93	33.87	34.66	37.82	40.18	41.76	45.70	46.49	50.59	53.58	55.16	61.46	69.34	77.22	78.79
2.069	29	2.907	60	6.015	32.33	36.26	37.06	40.21	42.57	44.15	48.09	48.87	52.97	55.96	57.54	63.84	71.72	79.59	81.17
2.074	27	2.707	56	5.614	32.80	36.74	37.53	40.68	43.05	44.62	48.56	49.35	53.44	56.44	58.01	64.31	72.19	80.07	81.64
2.083	36	3.609	75	7.519	30.57	34.51	35.30	38.46	40.82	42.40	46.34	47.12	51.22	54.21	55.79	62.09	69.97	77.85	79.43
2.088	34	3.409	71	7.118	31.05	34.99	35.78	38.93	41.30	42.87	46.82	47.60	51.70	54.69	56.27	62.57	70.45	78.33	79.90
2.090	67	6.717	140	14.036	22.78	26.75	27.55	30.73	33.10	34.69	38.65	39.44	43.55	46.55	48.13	54.44	62.33	70.22	71.80
2.094	32	3.208	67	6.717	31.53	35.47	36.26	39.41	41.77	43.35	47.29	48.08	52.18	55.17	56.74	63.05	70.92	78.80	80.38
2.100	30	3.008	63	6.316	32.00	35.94	36.73	39.89	42.25	43.83	47.77	48.55	52.65	55.64	57.22	63.52	71.40	79.27	80.85
2.105	38	3.810	80	8.020	30.00	33.95	34.74	37.90	40.26	41.84	45.78	46.57	50.67	53.66	55.23	61.54	69.42	77.30	78.87
2.113	53	5.314	112	11.229	26.21	30.17	30.96	34.12	36.49	38.07	42.02	42.81	46.91	49.91	51.49	57.80	65.68	73.56	75.14
2.120	25	2.506	53	5.314	33.20	37.14	37.93	41.08	43.44	45.02	48.96	49.74	53.84	56.83	58.41	64.71	72.58	80.46	82.04
2.143	28	2.807	60	6.015	32.40	36.34	37.13	40.28	42.65	44.22	48.16	48.95	53.05	56.04	57.61	63.92	71.79	79.67	81.25
2.143	35	3.509	75	7.519	30.64	34.59	35.38	38.53	40.89	42.47	46.42	47.20	51.30	54.29	55.87	62.17	70.05	77.93	79.50
2.143	42	4.211	90	9.023	28.88	32.82	33.61	36.77	39.14	40.71	44.66	45.45	49.55	52.54	54.12	60.42	68.30	76.18	77.76
2.152	33	3.308	71	7.118	31.12	35.06	35.86	39.01	41.37	42.95	46.89	47.68	51.78	54.77	56.34	62.65	70.53	78.40	79.98
2.154	26	2.607	56	5.614	32.88	36.82	37.61	40.76	43.12	44.70	48.64	49.43	53.52	56.51	58.09	64.39	72.27	80.14	81.72
2.161	31	3.108	67	6.717	31.60	35.54	36.33	39.49	41.85	43.43	47.37	48.15	52.25	55.24	56.82	63.12	71.00	78.88	80.45
2.162	37	3.709	80	8.020	30.08	34.02	34.82	37.97	40.34	41.91	45.86	46.64	50.74	53.73	55.31	61.62	69.49	77.37	78.95
2.172	29	2.907	63	6.316	32.08	36.02	36.81	39.96	42.33	43.90	47.85	48.63	52.73	55.72	57.30	63.60	71.48	79.35	80.93
2.182	22	2.206	48	4.812	33.83	37.77	38.56	41.71	44.07	45.65	49.59	50.38	54.47	57.46	59.04	65.34	73.22	81.09	82.67
2.195	41	4.110	90	9.023	28.95	32.90	33.69	36.85	39.21	40.79	44.74	45.52	49.62	52.62	54.19	60.50	68.38	76.26	77.84
2.206	34	3.409	75	7.519	30.72	34.66	35.45	38.61	40.97	42.55	46.49	47.28	51.38	54.37	55.94	62.25	70.13	78.01	79.58
2.219	32	3.208	71	7.118	31.20	35.14	35.93	39.09	41.45	43.03	46.97	47.75	51.85	54.85	56.42	62.72	70.60	78.48	80.06
2.222	27	2.707	60	6.015	32.48	36.42	37.21	40.36	42.72	44.30	48.24	49.03	53.12	56.12	57.69	63.99	71.87	79.75	81.32
2.222	36	3.609	80	8.020	30.16	34.10	34.89	38.05	40.41	41.99	45.93	46.72	50.82	53.81	55.39	61.69	69.57	77.45	79.03
2.222	63	6.316	140	14.036	23.06	27.04	27.84	31.02	33.40	34.98	38.94	39.73	43.85	46.85	48.43	54.74	62.64	70.52	72.10
2.233	30	3.008	67	6.717	31.68	35.62	36.41	39.56	41.93	43.50	47.45	48.23	52.33	55.32	56.90	63.20	71.08	78.96	80.53
2.240	25	2.506	56	5.614	32.96	36.89	37.69	40.84	43.20	44.78	48.72	49.50	53.60	56.59	58.17	64.47	72.35	80.22	81.80
2.240	50	5.013	112	11.229	26.43	30.39	31.18	34.35	36.72	38.30	42.25	43.04	47.14	50.14	51.72	58.03	65.91	73.79	75.37
2.250	28	2.807	63	6.316	32.16	36.10	36.89	40.04	42.40	43.98	47.92	48.71	52.81	55.80	57.37	63.68	71.55	79.43	81.01
2.250	40	4.010	90	9.023	29.03	32.97	33.77	36.92	39.29	40.87	44.81	45.60	49.70	52.69	54.27	60.58	68.46	76.34	77.91
2.250	80	8.020	180	18.046	18.20	22.27	23.08	26.29	28.69	30.29	34.28	35.07	39.21	42.22	43.81	50.14	58.05	65.95	67.53
2.273	22	2.206	50	5.013	33.67	37.61	38.40	41.55	43.91	45.49	49.43	50.22	54.31	57.30	58.88	65.18	73.06	80.93	82.51
2.273	33	3.308	75	7.519	30.79	34.74	35.53	38.68	41.05	42.62	46.57	47.35	51.45	54.45	56.02	62.33	70.20	78.08	79.66
2.286	35	3.509	80	8.020	30.23	34.18	34.97	38.12	40.49	42.06	46.01	46.80	50.90	53.89	55.46	61.77	69.65	77.53	79.10
2.290	31	3.108	71	7.118	31.27	35.22	36.01	39.16	41.53	43.10	47.05	47.83	51.93	54.92	56.50	62.80	70.68	78.56	80.13
2.308	26	2.607	60	6.015	32.55	36.49	37.28	40.44	42.80	44.38	48.32	49.10	53.20	56.19	57.77	64.07	71.95	79.83	81.40
2.308	39	3.910	90	9.023	29.10	33.05	33.84	37.00	39.36	40.94	44.89	45.68	49.78	52.77	54.35	60.65	68.53	76.41	77.99
2.310	29	2.907	67	6.717	31.75	35.70	36.49	39.64	42.00	43.58	47.52	48.31	52.41	55.40	56.97	63.28	71.16	79.03	80.61
2.333	27	2.707	63	6.316	32.23	36.17	36.96	40.12	42.48	44.06	48.00	48.78	52.88	55.87	57.45	63.75	71.63	79.51	81.08
2.333	48	4.812	112	11.229	26.58	30.54	31.33	34.50	36.87	38.45	42.40	43.19	47.29	50.29	51.87	58.18	66.06	73.95	75.52
2.333	60	6.015	140	14.036	23.28	27.26	28.06	31.24	33.62	35.20	39.17	39.96	44.07	47.07	48.65	54.97	62.86	70.75	72.33
2.344	32	3.208	75	7.519	30.87	34.81	35.60	38.76	41.12	42.70	46.65	47.43	51.53	54.52	56.10	62.40	70.28	78.16	79.74
2.353	34	3.409	80	8.020	30.31	34.25	35.04	38.20	40.56	42.14	46.09	46.87	50.97	53.96	55.54	61.85	69.73	77.60	79.18
2.367	30	3.008	71	7.118	31.35	35.29	36.08	39.24	41.60	43.18	47.12	47.91	52.01	55.00	56.57	62.88	70.76	78.64	80.21
2.368	38	3.810	90	9.023	29.17	33.12	33.92	37.07	39.44	41.02	44.97	45.75	49.85	52.85	54.42	60.73	68.61	76.49	78.07
2.393	28	2.807	67	6.717	31.83	35.77	36.56	39.72	42.08	43.66	47.60	48.39	52.48	55.48	57.05	63.35	71.23	79.11	80.69
Length factor*					**1.22**	**1.26**	**1.26**	**1.29**	**1.31**	**1.32**	**1.35**	**1.36**	**1.38**	**1.40**	**1.41**	**1.45**	**1.49**	**1.52**	**1.53**

Center distance is greater than eight times the small sprocket and the large sprocket is not flanged. See Engineering Section for details.

* The length correction factor must be used to determine the proper belt width.

Selection program available online at ptwizard.com and passport.baldor.com

HT500 selection table – 8mm pitch HT500 belts

Speed ratio	Sprocket combinations: Driver No. of teeth	Driver Pitch dia. inches	Driven No. of teeth	Driven Pitch dia. inches	Center distance, inches: 640-8MX	720-8MX	800-8MX	896-8MX	960-8MX	1000-8MX	1040-8MX	1120-8MX	1200-8MX	1224-8MX	1280-8MX	1440-8MX	1600-8MX	1760-8MX	1792-8MX
Length factor*					**0.79**	**0.83**	**0.87**	**0.91**	**0.94**	**0.96**	**0.97**	**1.00**	**1.03**	**1.03**	**1.05**	**1.10**	**1.14**	**1.17**	**1.18**
2.400	25	2.506	60	6.015	5.63	7.27	8.88	10.80	12.08	12.87	13.66	15.25	16.84	17.31	18.42	21.58	24.74	27.90	28.53
2.400	75	7.519	180	18.046														13.53	14.21
2.409	22	2.206	53	5.314	6.51	8.12	9.72	11.63	12.90	13.69	14.48	16.06	17.65	18.12	19.23	22.38	25.54	28.70	29.33
2.419	31	3.108	75	7.519			7.06	9.02	10.32	11.12	11.92	13.52	15.11	15.59	16.70	19.88	23.04	26.21	26.84
2.423	26	2.607	63	6.316	5.26	6.92	8.54	10.47	11.75	12.54	13.33	14.92	16.51	16.99	18.09	21.26	24.42	27.57	28.21
2.424	33	3.308	80	8.020			6.42	8.41	9.72	10.52	11.33	12.93	14.53	15.01	16.13	19.30	22.47	25.64	26.27
2.432	37	3.709	90	9.023				7.14	8.48	9.30	10.12	11.74	13.36	13.84	14.96	18.15	21.33	24.50	25.13
2.448	29	2.907	71	7.118		5.92	7.58	9.53	10.82	11.62	12.42	14.01	15.60	16.08	17.19	20.36	23.53	26.69	27.32
2.481	27	2.707	67	6.717		6.46	8.10	10.04	11.32	12.12	12.91	14.50	16.09	16.57	17.68	20.85	24.01	27.17	27.80
2.489	45	4.511	112	11.229								9.05	10.73	11.23	12.37	15.62	18.83	22.03	22.66
2.500	30	3.008	75	7.519			7.12	9.09	10.39	11.19	11.99	13.59	15.18	15.66	16.78	19.95	23.12	26.28	26.91
2.500	32	3.208	80	8.020			6.48	8.48	9.78	10.59	11.40	13.00	14.60	15.08	16.20	19.38	22.55	25.71	26.35
2.500	36	3.609	90	9.023				7.20	8.55	9.37	10.19	11.81	13.43	13.91	15.03	18.22	21.40	24.57	25.21
2.500	56	5.614	140	14.036												12.18	15.49	18.74	19.38
2.520	25	2.506	63	6.316	5.33	6.98	8.61	10.54	11.82	12.61	13.41	15.00	16.58	17.06	18.17	21.33	24.49	27.65	28.28
2.535	71	7.118	180	18.046														13.78	14.47
2.536	28	2.807	71	7.118		5.99	7.65	9.60	10.89	11.69	12.49	14.08	15.68	16.16	17.27	20.44	23.60	26.76	27.40
2.545	22	2.206	56	5.614	6.22	7.85	9.45	11.37	12.64	13.43	14.23	15.81	17.39	17.87	18.98	22.14	25.30	28.45	29.08
2.571	35	3.509	90	9.023				7.27	8.61	9.44	10.25	11.88	13.49	13.98	15.10	18.29	21.48	24.65	25.28
2.577	26	2.607	67	6.717		6.53	8.17	10.11	11.39	12.19	12.98	14.58	16.17	16.64	17.75	20.92	24.08	27.24	27.88
2.581	31	3.108	80	8.020			6.54	8.54	9.85	10.66	11.47	13.07	14.67	15.16	16.27	19.45	22.62	25.79	26.42
2.586	29	2.907	75	7.519			7.19	9.16	10.46	11.26	12.06	13.66	15.26	15.74	16.85	20.02	23.19	26.36	26.99
2.630	27	2.707	71	7.118		6.05	7.72	9.67	10.96	11.76	12.56	14.16	15.75	16.23	17.34	20.51	23.68	26.84	27.47
2.642	53	5.314	140	14.036												12.37	15.69	18.94	19.59
2.647	34	3.409	90	9.023				7.33	8.68	9.50	10.32	11.95	13.56	14.05	15.17	18.37	21.55	24.72	25.36
2.667	30	3.008	80	8.020			6.61	8.61	9.92	10.73	11.54	13.14	14.75	15.23	16.34	19.52	22.70	25.86	26.50
2.667	42	4.211	112	11.229								9.24	10.92	11.43	12.58	15.83	19.04	22.24	22.88
2.679	28	2.807	75	7.519			7.25	9.23	10.53	11.33	12.13	13.73	15.33	15.81	16.92	20.10	23.27	26.43	27.06
2.680	25	2.506	67	6.717		6.59	8.24	10.18	11.46	12.26	13.06	14.65	16.24	16.72	17.83	21.00	24.16	27.32	27.95
2.687	67	6.717	180	18.046														14.04	14.72
2.727	22	2.206	60	6.015	5.83	7.47	9.09	11.02	12.30	13.09	13.88	15.47	17.06	17.53	18.64	21.81	24.97	28.12	28.76
2.727	33	3.308	90	9.023				7.40	8.74	9.57	10.39	12.02	13.63	14.12	15.24	18.44	21.62	24.80	25.43
2.731	26	2.607	71	7.118		6.12	7.78	9.74	11.03	11.83	12.63	14.23	15.82	16.30	17.41	20.58	23.75	26.91	27.54
2.732	41	4.110	112	11.229								9.31	10.99	11.49	12.64	15.90	19.12	22.31	22.95
2.759	29	2.907	80	8.020			6.67	8.68	9.99	10.80	11.61	13.21	14.82	15.30	16.41	19.60	22.77	25.94	26.57
2.778	27	2.707	75	7.519		5.62	7.32	9.30	10.59	11.40	12.20	13.80	15.40	15.88	16.99	20.17	23.34	26.50	27.14
2.800	40	4.010	112	11.229								9.37	11.06	11.56	12.71	15.97	19.19	22.38	23.02
2.800	50	5.013	140	14.036												12.56	15.89	19.15	19.80
2.800	80	8.020	224	22.457															
2.813	32	3.208	90	9.023				7.46	8.81	9.64	10.46	12.09	13.70	14.19	15.31	18.51	21.69	24.87	25.50
2.840	25	2.506	71	7.118		6.18	7.85	9.81	11.10	11.90	12.70	14.30	15.89	16.37	17.48	20.66	23.82	26.99	27.62
2.857	28	2.807	80	8.020			6.74	8.75	10.06	10.87	11.67	13.28	14.89	15.37	16.49	19.67	22.84	26.01	26.64
2.857	63	6.316	180	18.046														14.29	14.98
2.864	22	2.206	63	6.316	5.52	7.19	8.82	10.75	12.03	12.83	13.62	15.21	16.80	17.28	18.39	21.55	24.72	27.88	28.51
2.872	39	3.910	112	11.229								9.44	11.12	11.62	12.78	16.04	19.26	22.46	23.09
2.885	26	2.607	75	7.519		5.68	7.38	9.36	10.66	11.47	12.27	13.87	15.47	15.95	17.07	20.24	23.41	26.58	27.21
2.903	31	3.108	90	9.023				7.52	8.87	9.70	10.52	12.16	13.77	14.26	15.38	18.58	21.77	24.94	25.58
2.917	48	4.812	140	14.036												12.69	16.02	19.29	19.94
2.947	38	3.810	112	11.229								9.50	11.19	11.69	12.84	16.10	19.33	22.53	23.17
2.963	27	2.707	80	8.020			6.80	8.81	10.12	10.94	11.74	13.35	14.96	15.44	16.56	19.74	22.92	26.08	26.72
2.987	75	7.519	224	22.457															
3.000	25	2.506	75	7.519		5.75	7.45	9.43	10.73	11.54	12.34	13.95	15.54	16.02	17.14	20.32	23.49	26.65	27.29
3.000	30	3.008	90	9.023				7.59	8.94	9.77	10.59	12.22	13.84	14.33	15.45	18.65	21.84	25.01	25.65
3.000	60	6.015	180	18.046														14.48	15.17
3.027	37	3.709	112	11.229							7.81	9.56	11.25	11.76	12.91	16.17	19.40	22.60	23.24
3.045	22	2.206	67	6.717	5.08	6.79	8.44	10.39	11.67	12.47	13.27	14.87	16.46	16.94	18.05	21.22	24.38	27.54	28.18
3.077	26	2.607	80	8.020			6.86	8.88	10.19	11.00	11.81	13.42	15.03	15.51	16.63	19.81	22.99	26.16	26.79
3.103	29	2.907	90	9.023				7.65	9.01	9.84	10.66	12.29	13.91	14.40	15.52	18.72	21.91	25.09	25.72
3.111	36	3.609	112	11.229							7.88	9.63	11.32	11.82	12.98	16.24	19.47	22.67	23.31
3.111	45	4.511	140	14.036												12.89	16.22	19.49	20.14
3.155	71	7.118	224	22.457															
3.200	25	2.506	80	8.020			6.93	8.94	10.26	11.07	11.88	13.50	15.10	15.58	16.70	19.89	23.06	26.23	26.87
3.200	35	3.509	112	11.229							7.94	9.69	11.38	11.89	13.04	16.31	19.54	22.74	23.38
3.214	28	2.807	90	9.023				7.71	9.07	9.90	10.73	12.36	13.98	14.47	15.59	18.80	21.98	25.16	25.80
3.214	56	5.614	180	18.046														14.73	15.42
3.227	22	2.206	71	7.118		6.37	8.05	10.01	11.31	12.11	12.91	14.51	16.11	16.59	17.70	20.88	24.05	27.21	27.84
3.294	34	3.409	112	11.229							8.00	9.75	11.45	11.95	13.11	16.38	19.61	22.81	23.45
3.333	27	2.707	90	9.023				7.78	9.14	9.97	10.79	12.43	14.05	14.54	15.66	18.87	22.06	25.23	25.87
3.333	42	4.211	140	14.036											9.57	13.08	16.42	19.70	20.35
3.343	67	6.717	224	22.457															
3.394	33	3.308	112	11.229							8.06	9.82	11.51	12.02	13.18	16.45	19.68	22.88	23.52
3.396	53	5.314	180	18.046														14.92	15.61
3.409	22	2.206	75	7.519		5.93	7.65	9.63	10.94	11.75	12.55	14.16	15.76	16.24	17.35	20.53	23.71	26.88	27.51
3.415	41	4.110	140	14.036											9.63	13.14	16.49	19.77	20.42
3.462	26	2.607	90	9.023				7.84	9.20	10.03	10.86	12.50	14.12	14.61	15.73	18.94	22.13	25.31	25.94
3.500	32	3.208	112	11.229							8.12	9.88	11.58	12.08	13.24	16.52	19.75	22.95	23.59
3.500	40	4.010	140	14.036											9.69	13.21	16.56	19.83	20.49
Length factor*					**0.79**	**0.83**	**0.87**	**0.91**	**0.94**	**0.96**	**0.97**	**1.00**	**1.03**	**1.03**	**1.05**	**1.10**	**1.14**	**1.17**	**1.18**

■ Center distance is greater than eight times the small sprocket and the large sprocket is not flanged. See Engineering Section for details.

* The length correction factor must be used to determine the proper belt width.

Selection program available online at ptwizard.com and passport.baldor.com

HT500 selection table – 8mm pitch HT500 belts (continued)

Speed ratio	Sprocket combinations				Center distance, inches														
	Driver		Driven																
	No. of teeth	Pitch dia. inches	No. of teeth	Pitch dia. inches	2000-8MX	2200-8MX	2240-8MX	2400-8MX	2520-8MX	2600-8MX	2800-8MX	2840-8MX	3048-8MX	3200-8MX	3280-8MX	3600-8MX	4000-8MX	4400-8MX	4480-8MX
Length factor*					**1.22**	**1.26**	**1.26**	**1.29**	**1.31**	**1.32**	**1.35**	**1.36**	**1.38**	**1.40**	**1.41**	**1.45**	**1.49**	**1.52**	**1.53**
2.400	25	2.506	60	6.015	32.63	36.57	37.36	40.51	42.88	44.45	48.40	49.18	53.28	56.27	57.85	64.15	72.03	79.90	81.48
2.400	75	7.519	180	18.046	18.54	22.61	23.42	26.64	29.05	30.65	34.64	35.43	39.57	42.59	44.17	50.51	58.42	66.33	67.91
2.409	22	2.206	53	5.314	33.43	37.37	38.16	41.31	43.67	45.25	49.19	49.97	54.07	57.06	58.64	64.94	72.82	80.69	82.27
2.419	31	3.108	75	7.519	30.94	34.89	35.68	38.84	41.20	42.78	46.72	47.51	51.61	54.60	56.18	62.48	70.36	78.24	79.81
2.423	26	2.607	63	6.316	32.31	36.25	37.04	40.19	42.56	44.13	48.08	48.86	52.96	55.95	57.53	63.83	71.71	79.59	81.16
2.424	33	3.308	80	8.020	30.38	34.33	35.12	38.28	40.64	42.22	46.16	46.95	51.05	54.04	55.62	61.92	69.80	77.68	79.26
2.432	37	3.709	90	9.023	29.25	33.20	33.99	37.15	39.52	41.09	45.04	45.83	49.93	52.92	54.50	60.81	68.69	76.57	78.15
2.448	29	2.907	71	7.118	31.43	35.37	36.16	39.32	41.68	43.26	47.20	47.99	52.08	55.08	56.65	62.96	70.84	78.71	80.29
2.481	27	2.707	67	6.717	31.91	35.85	36.64	39.79	42.16	43.73	47.68	48.46	52.56	55.55	57.13	63.43	71.31	79.19	80.76
2.489	45	4.511	112	11.229	26.80	30.76	31.55	34.72	37.09	38.67	42.63	43.41	47.52	50.52	52.09	58.41	66.29	74.18	75.75
2.500	30	3.008	75	7.519	31.02	34.96	35.76	38.91	41.28	42.85	46.80	47.58	51.68	54.68	56.25	62.56	70.44	78.31	79.89
2.500	32	3.208	80	8.020	30.46	34.40	35.19	38.35	40.72	42.29	46.24	47.02	51.12	54.12	55.69	62.00	69.88	77.76	79.34
2.500	36	3.609	90	9.023	29.32	33.27	34.07	37.23	39.59	41.17	45.12	45.90	50.01	53.00	54.58	60.88	68.77	76.65	78.22
2.500	56	5.614	140	14.036	23.56	27.55	28.35	31.53	33.91	35.50	39.46	40.25	44.37	47.37	48.95	55.27	63.17	71.06	72.63
2.520	25	2.506	63	6.316	32.39	36.33	37.12	40.27	42.63	44.21	48.15	48.94	53.04	56.03	57.60	63.91	71.79	79.66	81.24
2.535	71	7.118	180	18.046	18.81	22.89	23.70	26.92	29.33	30.93	34.93	35.72	39.86	42.88	44.47	50.81	58.72	66.63	68.21
2.536	28	2.807	71	7.118	31.50	35.44	36.24	39.39	41.75	43.33	47.28	48.06	52.16	55.15	56.73	63.03	70.91	78.79	80.37
2.545	22	2.206	56	5.614	33.18	37.12	37.91	41.07	43.43	45.01	48.95	49.73	53.83	56.82	58.40	64.70	72.58	80.46	82.03
2.571	35	3.509	90	9.023	29.40	33.35	34.14	37.30	39.67	41.25	45.19	45.98	50.08	53.08	54.65	60.96	68.84	76.72	78.30
2.577	26	2.607	67	6.717	31.98	35.92	36.71	39.87	42.23	43.81	47.75	48.54	52.64	55.63	57.21	63.51	71.39	79.27	80.84
2.581	31	3.108	80	8.020	30.53	34.48	35.27	38.43	40.79	42.37	46.31	47.10	51.20	54.19	55.77	62.08	69.96	77.84	79.41
2.586	29	2.907	75	7.519	31.10	35.04	35.83	38.99	41.35	42.93	46.87	47.66	51.76	54.75	56.33	62.63	70.51	78.39	79.97
2.630	27	2.707	71	7.118	31.58	35.52	36.31	39.47	41.83	43.41	47.35	48.14	52.24	55.23	56.81	63.11	70.99	78.87	80.44
2.642	53	5.314	140	14.036	23.77	27.76	28.56	31.75	34.13	35.72	39.68	40.47	44.59	47.59	49.17	55.50	63.39	71.28	72.86
2.647	34	3.409	90	9.023	29.47	33.42	34.22	37.38	39.74	41.32	45.27	46.06	50.16	53.15	54.73	61.04	68.92	76.80	78.38
2.667	30	3.008	80	8.020	30.61	34.55	35.34	38.50	40.87	42.44	46.39	47.18	51.28	54.27	55.85	62.15	70.03	77.91	79.49
2.667	42	4.211	112	11.229	27.02	30.98	31.77	34.94	37.31	38.90	42.85	43.64	47.74	50.74	52.32	58.63	66.52	74.41	75.98
2.679	28	2.807	75	7.519	31.17	35.12	35.91	39.06	41.43	43.01	46.95	47.74	51.84	54.83	56.41	62.71	70.59	78.47	80.05
2.680	25	2.506	67	6.717	32.06	36.00	36.79	39.95	42.31	43.89	47.83	48.62	52.71	55.71	57.28	63.59	71.47	79.34	80.92
2.687	67	6.717	180	18.046	19.07	23.16	23.97	27.20	29.61	31.22	35.21	36.01	40.15	43.17	44.76	51.10	59.02	66.93	68.51
2.727	22	2.206	60	6.015	32.86	36.80	37.59	40.74	43.11	44.68	48.63	49.41	53.51	56.50	58.08	64.38	72.26	80.14	81.71
2.727	33	3.308	90	9.023	29.55	33.50	34.29	37.45	39.82	41.40	45.35	46.13	50.23	53.23	54.81	61.11	69.00	76.88	78.45
2.731	26	2.607	71	7.118	31.65	35.60	36.39	39.54	41.91	43.48	47.43	48.21	52.31	55.31	56.88	63.19	71.07	78.94	80.52
2.732	41	4.110	112	11.229	27.09	31.05	31.85	35.02	37.39	38.97	42.93	43.71	47.82	50.82	52.40	58.71	66.60	74.48	76.06
2.759	29	2.907	80	8.020	30.68	34.63	35.42	38.58	40.94	42.52	46.47	47.25	51.35	54.35	55.92	62.23	70.11	77.99	79.57
2.778	27	2.707	75	7.519	31.25	35.19	35.98	39.14	41.50	43.08	47.03	47.81	51.91	54.91	56.48	62.79	70.67	78.55	80.12
2.800	40	4.010	112	11.229	27.16	31.13	31.92	35.09	37.46	39.04	43.00	43.79	47.90	50.89	52.47	58.79	66.67	74.56	76.14
2.800	50	5.013	140	14.036	23.98	27.98	28.78	31.97	34.35	35.94	39.90	40.69	44.81	47.82	49.40	55.72	63.62	71.51	73.09
2.800	80	8.020	224	22.457		17.89	18.75	22.12	24.60	26.24	30.32	31.13	35.32	38.37	39.97	46.37	54.32	62.26	63.84
2.813	32	3.208	90	9.023	29.62	33.57	34.37	37.53	39.89	41.47	45.42	46.21	50.31	53.30	54.88	61.19	69.07	76.95	78.53
2.840	25	2.506	71	7.118	31.73	35.67	36.46	39.62	41.98	43.56	47.51	48.29	52.39	55.38	56.96	63.26	71.14	79.02	80.60
2.857	28	2.807	80	8.020	30.76	34.70	35.50	38.65	41.02	42.60	46.54	47.33	51.43	54.42	56.00	62.31	70.19	78.07	79.64
2.857	63	6.316	180	18.046	19.34	23.43	24.25	27.48	29.89	31.50	35.50	36.30	40.44	43.46	45.05	51.40	59.32	67.23	68.81
2.864	22	2.206	63	6.316	32.61	36.55	37.35	40.50	42.86	44.44	48.38	49.17	53.27	56.26	57.84	64.14	72.02	79.90	81.47
2.872	39	3.910	112	11.229	27.23	31.20	32.00	35.16	37.54	39.12	43.07	43.86	47.97	50.97	52.55	58.86	66.75	74.64	76.21
2.885	26	2.607	75	7.519	31.32	35.27	36.06	39.22	41.58	43.16	47.10	47.89	51.99	54.98	56.56	62.86	70.74	78.62	80.20
2.903	31	3.108	90	9.023	29.69	33.65	34.44	37.60	39.97	41.55	45.50	46.28	50.39	53.38	54.96	61.27	69.15	77.03	78.61
2.917	48	4.812	140	14.036	24.12	28.12	28.92	32.11	34.49	36.08	40.05	40.84	44.96	47.96	49.55	55.87	63.77	71.66	73.24
2.947	38	3.810	112	11.229	27.31	31.27	32.07	35.24	37.61	39.19	43.15	43.94	48.05	51.04	52.62	58.94	66.83	74.71	76.29
2.963	27	2.707	80	8.020	30.83	34.78	35.57	38.73	41.09	42.67	46.62	47.41	51.51	54.50	56.08	62.38	70.26	78.14	79.72
2.987	75	7.519	224	22.457		18.21	19.07	22.45	24.93	26.58	30.66	31.47	35.67	38.72	40.33	46.72	54.69	62.63	64.21
3.000	25	2.506	75	7.519	31.40	35.34	36.13	39.29	41.66	43.23	47.18	47.97	52.07	55.06	56.64	62.94	70.82	78.70	80.28
3.000	30	3.008	90	9.023	29.77	33.72	34.51	37.68	40.04	41.62	45.57	46.36	50.46	53.46	55.03	61.34	69.23	77.11	78.68
3.000	60	6.015	180	18.046	19.54	23.64	24.45	27.69	30.10	31.71	35.71	36.51	40.66	43.68	45.27	51.62	59.54	67.45	69.03
3.027	37	3.709	112	11.229	27.38	31.35	32.14	35.31	37.68	39.27	43.22	44.01	48.12	51.12	52.70	59.01	66.90	74.79	76.37
3.045	22	2.206	67	6.717	32.28	36.23	37.02	40.17	42.54	44.11	48.06	48.84	52.94	55.94	57.51	63.82	71.70	79.57	81.15
3.077	26	2.607	80	8.020	30.90	34.85	35.65	38.80	41.17	42.75	46.70	47.48	51.58	54.58	56.15	62.46	70.34	78.22	79.80
3.103	29	2.907	90	9.023	29.84	33.80	34.59	37.75	40.12	41.70	45.65	46.43	50.54	53.53	55.11	61.42	69.30	77.18	78.76
3.111	36	3.609	112	11.229	27.45	31.42	32.22	35.39	37.76	39.34	43.30	44.09	48.20	51.19	52.77	59.09	66.98	74.86	76.44
3.111	45	4.511	140	14.036	24.34	28.34	29.14	32.33	34.71	36.30	40.27	41.06	45.18	48.19	49.77	56.10	64.00	71.89	73.47
3.155	71	7.118	224	22.457		18.46	19.32	22.71	25.20	26.85	30.94	31.75	35.95	39.01	40.61	47.01	54.98	62.92	64.51
3.200	25	2.506	80	8.020	30.98	34.93	35.72	38.88	41.25	42.82	46.77	47.56	51.66	54.65	56.23	62.54	70.42	78.30	79.88
3.200	35	3.509	112	11.229	27.52	31.49	32.29	35.46	37.83	39.42	43.37	44.16	48.27	51.27	52.85	59.16	67.05	74.94	76.52
3.214	28	2.807	90	9.023	29.92	33.87	34.66	37.83	40.19	41.77	45.72	46.51	50.61	53.61	55.19	61.50	69.38	77.26	78.84
3.214	56	5.614	180	18.046	19.80	23.91	24.73	27.97	30.38	31.99	36.00	36.80	40.94	43.97	45.56	51.91	59.83	67.75	69.33
3.227	22	2.206	71	7.118	31.95	35.90	36.69	39.85	42.21	43.79	47.73	48.52	52.62	55.61	57.19	63.49	71.37	79.25	80.83
3.294	34	3.409	112	11.229	27.60	31.57	32.36	35.53	37.91	39.49	43.45	44.24	48.35	51.34	52.92	59.24	67.13	75.02	76.59
3.333	27	2.707	90	9.023	29.99	33.95	34.74	37.90	40.27	41.85	45.80	46.59	50.69	53.68	55.26	61.57	69.46	77.34	78.91
3.333	42	4.211	140	14.036	24.55	28.55	29.35	32.54	34.93	36.52	40.49	41.28	45.40	48.41	49.99	56.32	64.22	72.12	73.70
3.343	67	6.717	224	22.457		18.71	19.58	22.97	25.47	27.12	31.21	32.02	36.23	39.29	40.89	47.30	55.27	63.21	64.80
3.394	33	3.308	112	11.229	27.67	31.64	32.44	35.61	37.98	39.56	43.52	44.31	48.42	51.42	53.00	59.32	67.21	75.09	76.67
3.396	53	5.314	180	18.046	20.00	24.11	24.93	28.18	30.59	32.20	36.21	37.01	41.16	44.18	45.77	52.13	60.06	67.97	69.55
3.409	22	2.206	75	7.519	31.62	35.57	36.36	39.52	41.88	43.46	47.41	48.19	52.29	55.29	56.86	63.17	71.05	78.93	80.51
3.415	41	4.110	140	14.036	24.62	28.62	29.42	32.61	35.00	36.59	40.56	41.36	45.48	48.48	50.07	56.39	64.30	72.19	73.77
3.462	26	2.607	90	9.023	30.06	34.02	34.81	37.98	40.34	41.92	45.87	46.66	50.76	53.76	55.34	61.65	69.53	77.41	78.99
3.500	32	3.208	112	11.229	27.74	31.71	32.51	35.68	38.05	39.64	43.60	44.38	48.50	51.49	53.07	59.39	67.28	75.17	76.75
3.500	40	4.010	140	14.036	24.69	28.69	29.49	32.69	35.07	36.66	40.64	41.43	45.55	48.56	50.14	56.47	64.37	72.27	73.85
Length factor*					**1.22**	**1.26**	**1.26**	**1.29**	**1.31**	**1.32**	**1.35**	**1.36**	**1.38**	**1.40**	**1.41**	**1.45**	**1.49**	**1.52**	**1.53**

Center distance is greater than eight times the small sprocket and the large sprocket is not flanged. See Engineering Section for details.

* The length correction factor must be used to determine the proper belt width.

Selection program available online at ptwizard.com and passport.baldor.com

HT500 selection table – 8mm pitch HT500 belts

Speed ratio	Sprocket combinations: Driver No. of teeth	Driver Pitch dia. inches	Driven No. of teeth	Driven Pitch dia. inches	Center distance, inches: 640-8MX	720-8MX	800-8MX	896-8MX	960-8MX	1000-8MX	1040-8MX	1120-8MX	1200-8MX	1224-8MX	1280-8MX	1440-8MX	1600-8MX	1760-8MX	1792-8MX
Length factor*					**0.79**	**0.83**	**0.87**	**0.91**	**0.94**	**0.96**	**0.97**	**1.00**	**1.03**	**1.03**	**1.05**	**1.10**	**1.14**	**1.17**	**1.18**
3.556	63	6.316	224	22.457															
3.590	39	3.910	140	14.036											9.75	13.27	16.62	19.90	20.55
3.600	25	2.506	90	9.023				7.90	9.27	10.10	10.93	12.57	14.19	14.68	15.80	19.01	22.20	25.38	26.02
3.600	50	5.013	180	18.046														15.11	15.80
3.613	31	3.108	112	11.229							8.18	9.94	11.64	12.15	13.31	16.59	19.82	23.03	23.67
3.636	22	2.206	80	8.020			7.12	9.14	10.46	11.28	12.09	13.70	15.31	15.80	16.91	20.10	23.28	26.45	27.09
3.684	38	3.810	140	14.036											9.81	13.34	16.69	19.97	20.62
3.733	30	3.008	112	11.229							8.24	10.01	11.71	12.21	13.38	16.65	19.89	23.10	23.74
3.733	60	6.015	224	22.457															
3.750	48	4.812	180	18.046														15.23	15.93
3.784	37	3.709	140	14.036											9.87	13.40	16.76	20.04	20.69
3.862	29	2.907	112	11.229						7.37	8.30	10.07	11.77	12.28	13.44	16.72	19.96	23.17	23.81
3.889	36	3.609	140	14.036											9.93	13.46	16.82	20.11	20.76
4.000	28	2.807	112	11.229						7.43	8.36	10.13	11.84	12.35	13.51	16.79	20.03	23.24	23.88
4.000	35	3.509	140	14.036											9.99	13.53	16.89	20.17	20.83
4.000	45	4.511	180	18.046													11.77	15.42	16.12
4.000	56	5.614	224	22.457															
4.091	22	2.206	90	9.023			5.92	8.09	9.46	10.30	11.12	12.77	14.40	14.88	16.01	19.22	22.42	25.60	26.23
4.118	34	3.409	140	14.036											10.05	13.59	16.95	20.24	20.89
4.148	27	2.707	112	11.229						7.49	8.42	10.20	11.90	12.41	13.58	16.86	20.10	23.31	23.95
4.226	53	5.314	224	22.457															
4.242	33	3.308	140	14.036											10.11	13.66	17.02	20.31	20.96
4.286	42	4.211	180	18.046													11.95	15.60	16.30
4.308	26	2.607	112	11.229						7.55	8.48	10.26	11.97	12.48	13.64	16.93	20.17	23.38	24.02
4.375	32	3.208	140	14.036											10.17	13.72	17.09	20.38	21.03
4.390	41	4.110	180	18.046													12.01	15.67	16.37
4.480	25	2.506	112	11.229						7.61	8.54	10.32	12.03	12.54	13.71	16.99	20.24	23.45	24.09
4.480	50	5.013	224	22.457															
4.500	40	4.010	180	18.046													12.07	15.73	16.43
4.516	31	3.108	140	14.036										8.89	10.23	13.78	17.15	20.45	21.10
4.615	39	3.910	180	18.046													12.13	15.79	16.49
4.667	30	3.008	140	14.036										8.95	10.29	13.85	17.22	20.51	21.17
4.667	48	4.812	224	22.457															
4.737	38	3.810	180	18.046													12.18	15.85	16.55
4.828	29	2.907	140	14.036										9.01	10.35	13.91	17.28	20.58	21.23
4.865	37	3.709	180	18.046													12.24	15.92	16.62
4.978	45	4.511	224	22.457															
5.000	28	2.807	140	14.036										9.06	10.41	13.97	17.35	20.65	21.30
5.000	36	3.609	180	18.046													12.30	15.98	16.68
5.091	22	2.206	112	11.229						7.78	8.72	10.51	12.23	12.74	13.90	17.20	20.44	23.66	24.30
5.143	35	3.509	180	18.046													12.36	16.04	16.74
5.185	27	2.707	140	14.036										9.12	10.47	14.04	17.42	20.72	21.37
5.294	34	3.409	180	18.046													12.42	16.10	16.80
5.333	42	4.211	224	22.457															
5.385	26	2.607	140	14.036										9.18	10.53	14.10	17.48	20.78	21.44
5.455	33	3.308	180	18.046													12.48	16.16	16.87
5.463	41	4.110	224	22.457															
5.600	25	2.506	140	14.036									8.61	9.24	10.59	14.16	17.55	20.85	21.51
5.600	40	4.010	224	22.457															
5.625	32	3.208	180	18.046													12.53	16.22	16.93
5.744	39	3.910	224	22.457															
5.806	31	3.108	180	18.046													12.59	16.29	16.99
5.895	38	3.810	224	22.457															
6.000	30	3.008	180	18.046													12.65	16.35	17.05
6.054	37	3.709	224	22.457															
6.207	29	2.907	180	18.046													12.71	16.41	17.12
6.222	36	3.609	224	22.457															
6.364	22	2.206	140	14.036									8.78	9.41	10.77	14.35	17.74	21.05	21.71
6.400	35	3.509	224	22.457															
6.429	28	2.807	180	18.046													12.77	16.47	17.18
6.588	34	3.409	224	22.457															
6.667	27	2.707	180	18.046													12.83	16.53	17.24
6.788	33	3.308	224	22.457															
6.923	26	2.607	180	18.046													12.88	16.59	17.30
7.000	32	3.208	224	22.457															
7.200	25	2.506	180	18.046													12.94	16.66	17.36
7.226	31	3.108	224	22.457															
7.467	30	3.008	224	22.457															
7.724	29	2.907	224	22.457															
8.000	28	2.807	224	22.457															
8.182	22	2.206	180	18.046													13.12	16.84	17.55
8.296	27	2.707	224	22.457															
8.615	26	2.607	224	22.457															
8.960	25	2.506	224	22.457															
10.182	22	2.206	224	22.457															
Length factor*					**0.79**	**0.83**	**0.87**	**0.91**	**0.94**	**0.96**	**0.97**	**1.00**	**1.03**	**1.03**	**1.05**	**1.10**	**1.14**	**1.17**	**1.18**

Center distance is greater than eight times the small sprocket and the large sprocket is not flanged. See Engineering Section for details.

* The length correction factor must be used to determine the proper belt width.

Selection program available online at ptwizard.com and passport.baldor.com

HT500 selection table – 8mm pitch HT500 belts (continued)

Speed ratio	Sprocket combinations				Center distance,inches														
	Driver		Driven																
	No. of teeth	Pitch dia. inches	No. of teeth	Pitch dia. inches	2000-8MX	2200-8MX	2240-8MX	2400-8MX	2520-8MX	2600-8MX	2800-8MX	2840-8MX	3048-8MX	3200-8MX	3280-8MX	3600-8MX	4000-8MX	4400-8MX	4480-8MX
Length factor*					**1.22**	**1.26**	**1.26**	**1.29**	**1.31**	**1.32**	**1.35**	**1.36**	**1.38**	**1.40**	**1.41**	**1.45**	**1.49**	**1.52**	**1.53**
3.556	63	6.316	224	22.457		18.96	19.83	23.23	25.73	27.38	31.48	32.29	36.51	39.57	41.17	47.58	55.55	63.50	65.09
3.590	39	3.910	140	14.036	24.76	28.76	29.57	32.76	35.14	36.74	40.71	41.50	45.62	48.63	50.21	56.54	64.45	72.34	73.92
3.600	25	2.506	90	9.023	30.14	34.09	34.89	38.05	40.42	42.00	45.95	46.74	50.84	53.84	55.41	61.72	69.61	77.49	79.07
3.600	50	5.013	180	18.046	20.20	24.32	25.13	28.38	30.80	32.41	36.43	37.22	41.38	44.40	45.99	52.35	60.28	68.19	69.77
3.613	31	3.108	112	11.229	27.81	31.79	32.58	35.75	38.13	39.71	43.67	44.46	48.57	51.57	53.15	59.47	67.36	75.25	76.82
3.636	22	2.206	80	8.020	31.20	35.15	35.95	39.11	41.47	43.05	47.00	47.79	51.89	54.88	56.46	62.77	70.65	78.53	80.11
3.684	38	3.810	140	14.036	24.83	28.83	29.64	32.83	35.22	36.81	40.78	41.57	45.70	48.71	50.29	56.62	64.52	72.42	74.00
3.733	30	3.008	112	11.229	27.88	31.86	32.65	35.83	38.20	39.79	43.75	44.53	48.64	51.64	53.22	59.54	67.43	75.32	76.90
3.733	60	6.015	224	22.457	14.63	19.15	20.02	23.43	25.93	27.58	31.69	32.50	36.71	39.78	41.38	47.79	55.77	63.72	65.31
3.750	48	4.812	180	18.046	20.33	24.45	25.27	28.52	30.94	32.55	36.57	37.36	41.52	44.55	46.14	52.49	60.42	68.34	69.92
3.784	37	3.709	140	14.036	24.90	28.91	29.71	32.90	35.29	36.88	40.86	41.65	45.77	48.78	50.36	56.69	64.60	72.49	74.07
3.862	29	2.907	112	11.229	27.96	31.93	32.73	35.90	38.28	39.86	43.82	44.61	48.72	51.72	53.30	59.62	67.51	75.40	76.98
3.889	36	3.609	140	14.036	24.97	28.98	29.78	32.97	35.36	36.95	40.93	41.72	45.84	48.85	50.44	56.77	64.67	72.57	74.15
4.000	28	2.807	112	11.229	28.03	32.00	32.80	35.97	38.35	39.93	43.89	44.68	48.79	51.79	53.37	59.69	67.58	75.47	77.05
4.000	35	3.509	140	14.036	25.03	29.05	29.85	33.05	35.43	37.03	41.00	41.79	45.92	48.93	50.51	56.84	64.75	72.64	74.22
4.000	45	4.511	180	18.046	20.53	24.65	25.47	28.73	31.15	32.76	36.78	37.58	41.73	44.76	46.35	52.71	60.65	68.56	70.15
4.000	56	5.614	224	22.457	14.87	19.40	20.27	23.68	26.19	27.85	31.96	32.77	36.99	40.05	41.66	48.08	56.06	64.01	65.60
4.091	22	2.206	90	9.023	30.36	34.32	35.11	38.27	40.64	42.22	46.17	46.96	51.07	54.06	55.64	61.95	69.84	77.72	79.30
4.118	34	3.409	140	14.036	25.10	29.12	29.92	33.12	35.51	37.10	41.07	41.87	45.99	49.00	50.58	56.92	64.82	72.72	74.30
4.148	27	2.707	112	11.229	28.10	32.08	32.87	36.05	38.42	40.01	43.97	44.76	48.87	51.87	53.45	59.77	67.66	75.55	77.13
4.226	53	5.314	224	22.457	15.04	19.59	20.46	23.88	26.39	28.05	32.16	32.97	37.20	40.26	41.87	48.29	56.27	64.23	65.82
4.242	33	3.308	140	14.036	25.17	29.19	29.99	33.19	35.58	37.17	41.15	41.94	46.07	49.07	50.66	56.99	64.90	72.80	74.37
4.286	42	4.211	180	18.046	20.72	24.86	25.68	28.93	31.36	32.97	36.99	37.79	41.95	44.98	46.57	52.93	60.87	68.79	70.37
4.308	26	2.607	112	11.229	28.17	32.15	32.95	36.12	38.50	40.08	44.04	44.83	48.94	51.94	53.52	59.84	67.74	75.63	77.20
4.375	32	3.208	140	14.036	25.24	29.26	30.06	33.26	35.65	37.24	41.22	42.01	46.14	49.15	50.73	57.06	64.97	72.87	74.45
4.390	41	4.110	180	18.046	20.79	24.92	25.74	29.00	31.43	33.04	37.06	37.86	42.02	45.05	46.64	53.01	60.94	68.86	70.44
4.480	25	2.506	112	11.229	28.25	32.22	33.02	36.19	38.57	40.16	44.12	44.91	49.02	52.02	53.60	59.92	67.81	75.70	77.28
4.480	50	5.013	224	22.457	15.22	19.77	20.65	24.07	26.59	28.25	32.36	33.18	37.40	40.47	42.08	48.50	56.49	64.45	66.04
4.500	40	4.010	180	18.046	20.85	24.99	25.81	29.07	31.50	33.11	37.13	37.93	42.09	45.12	46.71	53.08	61.01	68.93	70.52
4.516	31	3.108	140	14.036	25.31	29.33	30.13	33.33	35.72	37.31	41.29	42.08	46.21	49.22	50.81	57.14	65.05	72.95	74.52
4.615	39	3.910	180	18.046	20.92	25.06	25.88	29.14	31.57	33.18	37.20	38.00	42.16	45.19	46.79	53.15	61.09	69.01	70.59
4.667	30	3.008	140	14.036	25.38	29.40	30.20	33.40	35.79	37.39	41.37	42.16	46.28	49.29	50.88	57.21	65.12	73.02	74.60
4.667	48	4.812	224	22.457	15.34	19.90	20.77	24.20	26.72	28.38	32.50	33.31	37.54	40.61	42.22	48.65	56.63	64.59	66.18
4.737	38	3.810	180	18.046	20.99	25.12	25.95	29.21	31.64	33.25	37.27	38.07	42.23	45.26	46.86	53.22	61.16	69.08	70.67
4.828	29	2.907	140	14.036	25.45	29.47	30.28	33.47	35.87	37.46	41.44	42.23	46.36	49.37	50.95	57.29	65.20	73.10	74.68
4.865	37	3.709	180	18.046	21.05	25.19	26.01	29.28	31.70	33.32	37.34	38.14	42.30	45.34	46.93	53.30	61.23	69.16	70.74
4.978	45	4.511	224	22.457	15.51	20.08	20.96	24.39	26.91	28.58	32.70	33.52	37.75	40.82	42.43	48.86	56.85	64.81	66.40
5.000	28	2.807	140	14.036	25.52	29.54	30.35	33.55	35.94	37.53	41.51	42.30	46.43	49.44	51.03	57.36	65.27	73.17	74.75
5.000	36	3.609	180	18.046	21.12	25.26	26.08	29.34	31.77	33.39	37.41	38.21	42.38	45.41	47.00	53.37	61.31	69.23	70.81
5.091	22	2.206	112	11.229	28.46	32.44	33.24	36.41	38.79	40.38	44.34	45.13	49.24	52.24	53.82	60.14	68.04	75.93	77.51
5.143	35	3.509	180	18.046	21.18	25.33	26.15	29.41	31.84	33.46	37.48	38.28	42.45	45.48	47.07	53.44	61.38	69.30	70.89
5.185	27	2.707	140	14.036	25.59	29.61	30.42	33.62	36.01	37.60	41.58	42.38	46.50	49.52	51.10	57.44	65.34	73.25	74.83
5.294	34	3.409	180	18.046	21.25	25.39	26.22	29.48	31.91	33.53	37.55	38.35	42.52	45.55	47.15	53.51	61.45	69.38	70.96
5.333	42	4.211	224	22.457	15.69	20.27	21.15	24.59	27.11	28.78	32.90	33.72	37.95	41.03	42.64	49.07	57.06	65.03	66.62
5.385	26	2.607	140	14.036	25.66	29.68	30.49	33.69	36.08	37.67	41.66	42.45	46.58	49.59	51.17	57.51	65.42	73.32	74.90
5.455	33	3.308	180	18.046	21.31	25.46	26.28	29.55	31.98	33.60	37.62	38.42	42.59	45.62	47.22	53.59	61.53	69.45	71.04
5.463	41	4.110	224	22.457	15.75	20.33	21.21	24.65	27.18	28.84	32.97	33.79	38.02	41.10	42.71	49.14	57.14	65.10	66.69
5.600	25	2.506	140	14.036	25.73	29.75	30.56	33.76	36.15	37.75	41.73	42.52	46.65	49.66	51.25	57.58	65.49	73.40	74.98
5.600	40	4.010	224	22.457	15.81	20.39	21.28	24.72	27.24	28.91	33.04	33.85	38.09	41.17	42.78	49.21	57.21	65.17	66.76
5.625	32	3.208	180	18.046	21.38	25.53	26.35	29.62	32.05	33.67	37.69	38.49	42.66	45.69	47.29	53.66	61.60	69.53	71.11
5.744	39	3.910	224	22.457	15.86	20.46	21.34	24.78	27.31	28.97	33.10	33.92	38.16	41.23	42.85	49.28	57.28	65.25	66.84
5.806	31	3.108	180	18.046	21.44	25.59	26.42	29.69	32.12	33.74	37.76	38.57	42.73	45.76	47.36	53.73	61.67	69.60	71.18
5.895	38	3.810	224	22.457	15.92	20.52	21.40	24.84	27.37	29.04	33.17	33.99	38.23	41.30	42.92	49.35	57.35	65.32	66.91
6.000	30	3.008	180	18.046	21.51	25.66	26.48	29.75	32.19	33.80	37.83	38.64	42.80	45.84	47.43	53.80	61.75	69.67	71.26
6.054	37	3.709	224	22.457	15.98	20.58	21.46	24.91	27.44	29.11	33.24	34.06	38.30	41.37	42.99	49.42	57.42	65.39	66.98
6.207	29	2.907	180	18.046	21.57	25.73	26.55	29.82	32.26	33.87	37.91	38.71	42.87	45.91	47.50	53.88	61.82	69.75	71.33
6.222	36	3.609	224	22.457	16.04	20.64	21.52	24.97	27.50	29.17	33.31	34.12	38.36	41.44	43.06	49.49	57.49	65.46	67.05
6.364	22	2.206	140	14.036	25.94	29.96	30.77	33.97	36.37	37.96	41.95	42.74	46.87	49.88	51.47	57.81	65.72	73.62	75.20
6.400	35	3.509	224	22.457	16.10	20.70	21.59	25.04	27.57	29.24	33.37	34.19	38.43	41.51	43.13	49.56	57.56	65.54	67.13
6.429	28	2.807	180	18.046	21.64	25.79	26.62	29.89	32.32	33.94	37.98	38.78	42.94	45.98	47.58	53.95	61.89	69.82	71.41
6.588	34	3.409	224	22.457	16.16	20.76	21.65	25.10	27.63	29.30	33.44	34.26	38.50	41.58	43.20	49.63	57.64	65.61	67.20
6.667	27	2.707	180	18.046	21.70	25.86	26.69	29.96	32.39	34.01	38.04	38.85	43.02	46.05	47.65	54.02	61.97	69.89	71.48
6.788	33	3.308	224	22.457	16.22	20.83	21.71	25.16	27.70	29.37	33.51	34.33	38.57	41.65	43.27	49.70	57.71	65.68	67.27
6.923	26	2.607	180	18.046	21.77	25.93	26.75	30.03	32.46	34.08	38.11	38.92	43.09	46.12	47.72	54.09	62.04	69.97	71.55
7.000	32	3.208	224	22.457	16.27	20.89	21.77	25.23	27.76	29.43	33.57	34.39	38.64	41.72	43.33	49.77	57.78	65.75	67.34
7.200	25	2.506	180	18.046	21.83	25.99	26.82	30.09	32.53	34.15	38.19	38.99	43.16	46.19	47.79	54.17	62.11	70.04	71.63
7.226	31	3.108	224	22.457	16.33	20.95	21.84	25.29	27.83	29.50	33.64	34.46	38.71	41.79	43.40	49.84	57.85	65.82	67.42
7.467	30	3.008	224	22.457	16.39	21.01	21.90	25.36	27.89	29.57	33.71	34.53	38.77	41.85	43.47	49.91	57.92	65.90	67.49
7.724	29	2.907	224	22.457	16.45	21.07	21.96	25.42	27.96	29.63	33.77	34.59	38.84	41.92	43.54	49.99	57.99	65.97	67.56
8.000	28	2.807	224	22.457	16.51	21.13	22.02	25.48	28.02	29.70	33.84	34.66	38.91	41.99	43.61	50.06	58.06	66.04	67.63
8.182	22	2.206	180	18.046	22.02	26.19	27.02	30.30	32.74	34.36	38.39	39.20	43.37	46.41	48.00	54.38	62.33	70.26	71.85
8.296	27	2.707	224	22.457	16.56	21.20	22.08	25.55	28.09	29.76	33.91	34.73	38.98	42.06	43.68	50.13	58.14	66.11	67.70
8.615	26	2.607	224	22.457	16.62	21.26	22.15	25.61	28.15	29.83	33.97	34.79	39.05	42.13	43.75	50.20	58.21	66.18	67.78
8.960	25	2.506	224	22.457	16.68	21.32	22.21	25.68	28.22	29.89	34.04	34.86	39.12	42.20	43.82	50.27	58.28	66.26	67.85
10.182	22	2.206	224	22.457	16.85	21.50	22.39	25.87	28.41	30.09	34.24	35.06	39.32	42.40	44.03	50.48	58.49	66.47	68.07
Length factor*					**1.22**	**1.26**	**1.26**	**1.29**	**1.31**	**1.32**	**1.35**	**1.36**	**1.38**	**1.40**	**1.41**	**1.45**	**1.49**	**1.52**	**1.53**

Center distance is greater than eight times the small sprocket and the large sprocket is not flanged. See Engineering Section for details.

* The length correction factor must be used to determine the proper belt width.

Selection program available online at ptwizard.com and passport.baldor.com

HT500 selection table – 14mm pitch HT500 belts

Speed ratio	Sprocket combinations: Driver No. of teeth	Driver Pitch dia. inches	Driven No. of teeth	Driven Pitch dia. inches	Center distance, inches: 994-14MX	1120-14MX	1190-14MX	1260-14MX	1400-14MX	1568-14MX	1610-14MX	1750-14MX	1890-14MX	1960-14MX	2100-14MX	2240-14MX	2310-14MX
Length factor*					**0.68**	**0.73**	**0.75**	**0.77**	**0.81**	**0.85**	**0.86**	**0.89**	**0.92**	**0.94**	**0.96**	**0.99**	**1.00**
1.000	28	4.912	28	4.912	11.85	14.33	15.71	17.09	19.84	23.15	23.98	26.73	29.49	30.87	33.62	36.38	37.75
1.000	29	5.088	29	5.088	11.57	14.05	15.43	16.81	19.57	22.87	23.70	26.46	29.21	30.59	33.35	36.10	37.48
1.000	30	5.263	30	5.263	11.30	13.78	15.16	16.54	19.29	22.60	23.43	26.18	28.94	30.32	33.07	35.83	37.20
1.000	31	5.439	31	5.439	11.02	13.50	14.88	16.26	19.02	22.32	23.15	25.91	28.66	30.04	32.80	35.55	36.93
1.000	32	5.614	32	5.614	10.75	13.23	14.61	15.99	18.74	22.05	22.88	25.63	28.39	29.77	32.52	35.28	36.65
1.000	33	5.790	33	5.790	10.47	12.95	14.33	15.71	18.47	21.77	22.60	25.36	28.11	29.49	32.25	35.00	36.38
1.000	34	5.965	34	5.965	10.20	12.68	14.06	15.44	18.19	21.50	22.33	25.08	27.84	29.22	31.97	34.73	36.10
1.000	35	6.141	35	6.141	9.92	12.40	13.78	15.16	17.91	21.22	22.05	24.80	27.56	28.94	31.69	34.45	35.82
1.000	36	6.316	36	6.316	9.64	12.12	13.50	14.88	17.64	20.94	21.77	24.53	27.28	28.66	31.42	34.17	35.55
1.000	37	6.492	37	6.492	9.37	11.85	13.23	14.61	17.36	20.67	21.50	24.25	27.01	28.39	31.14	33.90	35.27
1.000	38	6.667	38	6.667	9.09	11.57	12.95	14.33	17.09	20.39	21.22	23.98	26.73	28.11	30.87	33.62	35.00
1.000	39	6.842	39	6.842	8.82	11.30	12.68	14.06	16.81	20.12	20.95	23.70	26.46	27.84	30.59	33.35	34.72
1.000	40	7.018	40	7.018	8.54	11.02	12.40	13.78	16.54	19.84	20.67	23.43	26.18	27.56	30.32	33.07	34.45
1.000	43	7.544	43	7.544		10.19	11.57	12.95	15.71	19.01	19.84	22.60	25.35	26.73	29.49	32.24	33.62
1.000	45	7.895	45	7.895		9.64	11.02	12.40	15.16	18.46	19.29	22.05	24.80	26.18	28.94	31.69	33.07
1.000	48	8.421	48	8.421			10.20	11.58	14.33	17.64	18.47	21.22	23.98	25.36	28.11	30.87	32.24
1.000	50	8.772	50	8.772			9.65	11.03	13.78	17.09	17.92	20.67	23.43	24.81	27.56	30.32	31.69
1.000	53	9.299	53	9.299				10.20	12.95	16.26	17.09	19.84	22.60	23.98	26.73	29.49	30.86
1.000	56	9.825	56	9.825					12.13	15.43	16.26	19.02	21.77	23.15	25.91	28.66	30.04
1.000	60	10.527	60	10.527						14.33	15.16	17.91	20.67	22.05	24.80	27.56	28.93
1.000	63	11.053	63	11.053						13.50	14.33	17.09	19.84	21.22	23.98	26.73	28.11
1.000	67	11.755	67	11.755							13.23	15.99	18.74	20.12	22.88	25.63	27.01
1.000	71	12.457	71	12.457								14.88	17.64	19.02	21.77	24.53	25.90
1.000	75	13.158	75	13.158									16.54	17.92	20.67	23.43	24.80
1.000	80	14.036	80	14.036									15.16	16.54	19.29	22.05	23.42
1.026	38	6.667	39	6.842	8.95	11.43	12.81	14.19	16.95	20.25	21.08	23.84	26.59	27.97	30.73	33.48	34.86
1.026	39	6.842	40	7.018	8.68	11.16	12.54	13.92	16.67	19.98	20.81	23.56	26.32	27.70	30.45	33.21	34.58
1.027	37	6.492	38	6.667	9.23	11.71	13.09	14.47	17.22	20.53	21.36	24.11	26.87	28.25	31.00	33.76	35.13
1.028	36	6.316	37	6.492	9.51	11.99	13.37	14.75	17.50	20.81	21.64	24.39	27.15	28.53	31.28	34.04	35.41
1.029	34	5.965	35	6.141	10.06	12.54	13.92	15.30	18.05	21.36	22.19	24.94	27.70	29.08	31.83	34.59	35.96
1.029	35	6.141	36	6.316	9.78	12.26	13.64	15.02	17.78	21.08	21.91	24.67	27.42	28.80	31.56	34.31	35.69
1.030	33	5.790	34	5.965	10.33	12.81	14.19	15.57	18.33	21.63	22.46	25.22	27.97	29.35	32.11	34.86	36.24
1.031	32	5.614	33	5.790	10.61	13.09	14.47	15.85	18.60	21.91	22.74	25.49	28.25	29.63	32.38	35.14	36.51
1.032	31	5.439	32	5.614	10.88	13.36	14.74	16.12	18.88	22.18	23.01	25.77	28.52	29.90	32.66	35.41	36.79
1.033	30	5.263	31	5.439	11.16	13.64	15.02	16.40	19.15	22.46	23.29	26.04	28.80	30.18	32.93	35.69	37.06
1.034	29	5.088	30	5.263	11.44	13.92	15.30	16.68	19.43	22.74	23.57	26.32	29.08	30.46	33.21	35.97	37.34
1.036	28	4.912	29	5.088	11.71	14.19	15.57	16.95	19.71	23.01	23.84	26.60	29.35	30.73	33.49	36.24	37.62
1.042	48	8.421	50	8.772			9.92	11.30	14.06	17.36	18.19	20.95	23.70	25.08	27.84	30.59	31.97
1.047	43	7.544	45	7.895		9.92	11.30	12.68	15.43	18.74	19.57	22.32	25.08	26.46	29.21	31.97	33.34
1.050	60	10.527	63	11.053						13.91	14.74	17.50	20.25	21.63	24.39	27.14	28.52
1.053	38	6.667	40	7.018	8.82	11.30	12.68	14.06	16.81	20.12	20.95	23.70	26.46	27.84	30.59	33.35	34.72
1.054	37	6.492	39	6.842	9.09	11.57	12.95	14.33	17.09	20.39	21.22	23.98	26.73	28.11	30.87	33.62	35.00
1.056	36	6.316	38	6.667	9.37	11.85	13.23	14.61	17.36	20.67	21.50	24.25	27.01	28.39	31.14	33.90	35.27
1.056	71	12.457	75	13.158								14.33	17.08	18.46	21.22	23.97	25.35
1.057	35	6.141	37	6.492	9.64	12.12	13.50	14.88	17.64	20.94	21.77	24.53	27.28	28.66	31.42	34.17	35.55
1.057	53	9.299	56	9.825					12.54	15.84	16.67	19.43	22.18	23.56	26.32	29.07	30.45
1.059	34	5.965	36	6.316	9.92	12.40	13.78	15.16	17.91	21.22	22.05	24.80	27.56	28.94	31.69	34.45	35.82
1.060	50	8.772	53	9.299				10.61	13.36	16.67	17.50	20.26	23.01	24.39	27.15	29.90	31.28
1.060	67	11.755	71	12.457								15.43	18.19	19.57	22.32	25.08	26.45
1.061	33	5.790	35	6.141	10.19	12.67	14.05	15.43	18.19	21.49	22.32	25.08	27.83	29.21	31.97	34.72	36.10
1.063	32	5.614	34	5.965	10.47	12.95	14.33	15.71	18.47	21.77	22.60	25.36	28.11	29.49	32.25	35.00	36.38
1.063	63	11.053	67	11.755						12.95	13.78	16.53	19.29	20.67	23.42	26.18	27.55
1.065	31	5.439	33	5.790	10.74	13.22	14.60	15.98	18.74	22.05	22.88	25.63	28.39	29.77	32.52	35.28	36.65
1.067	30	5.263	32	5.614	11.02	13.50	14.88	16.26	19.02	22.32	23.15	25.91	28.66	30.04	32.80	35.55	36.93
1.067	45	7.895	48	8.421		9.23	10.61	11.99	14.74	18.05	18.88	21.63	24.39	25.77	28.52	31.28	32.65
1.067	75	13.158	80	14.036									15.84	17.22	19.98	22.73	24.11
1.069	29	5.088	31	5.439	11.30	13.78	15.16	16.54	19.29	22.60	23.43	26.18	28.94	30.32	33.07	35.83	37.20
1.071	28	4.912	30	5.263	11.57	14.05	15.43	16.81	19.57	22.87	23.70	26.46	29.21	30.59	33.35	36.10	37.48
1.071	56	9.825	60	10.527					11.57	14.88	15.71	18.46	21.22	22.60	25.35	28.11	29.48
1.075	40	7.018	43	7.544	8.12	10.60	11.99	13.37	16.12	19.43	20.26	23.01	25.77	27.15	29.90	32.66	34.03
1.081	37	6.492	40	7.018	8.95	11.43	12.81	14.19	16.95	20.25	21.08	23.84	26.59	27.97	30.73	33.48	34.86
1.083	36	6.316	39	6.842	9.23	11.71	13.09	14.47	17.22	20.53	21.36	24.11	26.87	28.25	31.00	33.76	35.13
1.086	35	6.141	38	6.667	9.50	11.98	13.36	14.74	17.50	20.80	21.63	24.39	27.14	28.52	31.28	34.03	35.41
1.088	34	5.965	37	6.492	9.78	12.26	13.64	15.02	17.77	21.08	21.91	24.66	27.42	28.80	31.56	34.31	35.69
1.091	33	5.790	36	6.316	10.05	12.53	13.91	15.29	18.05	21.36	22.19	24.94	27.70	29.08	31.83	34.59	35.96
1.094	32	5.614	35	6.141	10.33	12.81	14.19	15.57	18.33	21.63	22.46	25.22	27.97	29.35	32.11	34.86	36.24
1.097	31	5.439	34	5.965	10.61	13.09	14.47	15.85	18.60	21.91	22.74	25.49	28.25	29.63	32.38	35.14	36.51
1.100	30	5.263	33	5.790	10.88	13.36	14.74	16.12	18.88	22.18	23.01	25.77	28.52	29.90	32.66	35.41	36.79
1.103	29	5.088	32	5.614	11.16	13.64	15.02	16.40	19.15	22.46	23.29	26.04	28.80	30.18	32.93	35.69	37.06
1.103	39	6.842	43	7.544	8.26	10.74	12.12	13.50	16.26	19.56	20.39	23.15	25.90	27.28	30.04	32.79	34.17
1.104	48	8.421	53	9.299				10.88	13.64	16.94	17.77	20.53	23.28	24.66	27.42	30.17	31.55
Length factor*					**0.68**	**0.73**	**0.75**	**0.77**	**0.81**	**0.85**	**0.86**	**0.89**	**0.92**	**0.94**	**0.96**	**0.99**	**1.00**

* The length correction factor must be used to determine the proper belt width.

Selection program available online at ptwizard.com and passport.baldor.com

HT500 selection table – 14mm pitch HT500 belts (continued)

Speed ratio	Sprocket combinations				Center distance, inches													
	Driver		Driven															
	No. of teeth	Pitch dia. inches	No. of teeth	Pitch dia. inches	2380-14MX	2450-14MX	2520-14MX	2590-14MX	2660-14MX	2800-14MX	3136-14MX	3304-14MX	3360-14MX	3500-14MX	3850-14MX	3920-14MX	4326-14MX	4410-14MX
Length factor*					**1.01**	**1.02**	**1.03**	**1.04**	**1.05**	**1.07**	**1.12**	**1.14**	**1.14**	**1.16**	**1.19**	**1.20**	**1.24**	**1.25**
1.000	28	4.912	28	4.912	39.13	40.51	41.89	43.27	44.64	47.40	54.01	57.32	58.42	61.18	68.07	69.45	77.44	79.09
1.000	29	5.088	29	5.088	38.86	40.24	41.61	42.99	44.37	47.13	53.74	57.05	58.15	60.90	67.79	69.17	77.16	78.82
1.000	30	5.263	30	5.263	38.58	39.96	41.34	42.72	44.09	46.85	53.46	56.77	57.87	60.63	67.52	68.90	76.89	78.54
1.000	31	5.439	31	5.439	38.31	39.69	41.06	42.44	43.82	46.58	53.19	56.50	57.60	60.35	67.24	68.62	76.61	78.27
1.000	32	5.614	32	5.614	38.03	39.41	40.79	42.17	43.54	46.30	52.91	56.22	57.32	60.08	66.97	68.35	76.34	77.99
1.000	33	5.790	33	5.790	37.76	39.14	40.51	41.89	43.27	46.03	52.64	55.95	57.05	59.80	66.69	68.07	76.06	77.72
1.000	34	5.965	34	5.965	37.48	38.86	40.24	41.62	42.99	45.75	52.36	55.67	56.77	59.53	66.42	67.80	75.79	77.44
1.000	35	6.141	35	6.141	37.20	38.58	39.96	41.34	42.71	45.47	52.08	55.39	56.49	59.25	66.14	67.52	75.51	77.16
1.000	36	6.316	36	6.316	36.93	38.31	39.68	41.06	42.44	45.20	51.81	55.12	56.22	58.97	65.86	67.24	75.23	76.89
1.000	37	6.492	37	6.492	36.65	38.03	39.41	40.79	42.16	44.92	51.53	54.84	55.94	58.70	65.59	66.97	74.96	76.61
1.000	38	6.667	38	6.667	36.38	37.76	39.13	40.51	41.89	44.65	51.26	54.57	55.67	58.42	65.31	66.69	74.68	76.34
1.000	39	6.842	39	6.842	36.10	37.48	38.86	40.24	41.61	44.37	50.98	54.29	55.39	58.15	65.04	66.42	74.41	76.06
1.000	40	7.018	40	7.018	35.83	37.21	38.58	39.96	41.34	44.10	50.71	54.02	55.12	57.87	64.76	66.14	74.13	75.79
1.000	43	7.544	43	7.544	35.00	36.38	37.75	39.13	40.51	43.27	49.88	53.19	54.29	57.04	63.93	65.31	73.30	74.96
1.000	45	7.895	45	7.895	34.45	35.83	37.20	38.58	39.96	42.72	49.33	52.64	53.74	56.49	63.38	64.76	72.75	74.41
1.000	48	8.421	48	8.421	33.62	35.00	36.38	37.76	39.13	41.89	48.50	51.81	52.91	55.67	62.56	63.94	71.93	73.58
1.000	50	8.772	50	8.772	33.07	34.45	35.83	37.21	38.58	41.34	47.95	51.26	52.36	55.12	62.01	63.39	71.38	73.03
1.000	53	9.299	53	9.299	32.24	33.62	35.00	36.38	37.75	40.51	47.12	50.43	51.53	54.29	61.18	62.56	70.55	72.20
1.000	56	9.825	56	9.825	31.42	32.80	34.17	35.55	36.93	39.69	46.30	49.61	50.71	53.46	60.35	61.73	69.72	71.38
1.000	60	10.527	60	10.527	30.31	31.69	33.07	34.45	35.82	38.58	45.19	48.50	49.60	52.36	59.25	60.63	68.62	70.27
1.000	63	11.053	63	11.053	29.49	30.87	32.24	33.62	35.00	37.76	44.37	47.68	48.78	51.53	58.42	59.80	67.79	69.45
1.000	67	11.755	67	11.755	28.39	29.77	31.14	32.52	33.90	36.66	43.27	46.58	47.68	50.43	57.32	58.70	66.69	68.35
1.000	71	12.457	71	12.457	27.28	28.66	30.04	31.42	32.79	35.55	42.16	45.47	46.57	49.33	56.22	57.60	65.59	67.24
1.000	75	13.158	75	13.158	26.18	27.56	28.94	30.32	31.69	34.45	41.06	44.37	45.47	48.23	55.12	56.50	64.49	66.14
1.000	80	14.036	80	14.036	24.80	26.18	27.56	28.94	30.31	33.07	39.68	42.99	44.09	46.85	53.74	55.12	63.11	64.76
1.026	38	6.667	39	6.842	36.24	37.62	38.99	40.37	41.75	44.51	51.12	54.43	55.53	58.28	65.17	66.55	74.55	76.20
1.026	39	6.842	40	7.018	35.96	37.34	38.72	40.10	41.47	44.23	50.84	54.15	55.25	58.01	64.90	66.28	74.27	75.92
1.027	37	6.492	38	6.667	36.51	37.89	39.27	40.65	42.02	44.78	51.39	54.70	55.80	58.56	65.45	66.83	74.82	76.47
1.028	36	6.316	37	6.492	36.79	38.17	39.55	40.93	42.30	45.06	51.67	54.98	56.08	58.84	65.73	67.11	75.10	76.75
1.029	34	5.965	35	6.141	37.34	38.72	40.10	41.48	42.85	45.61	52.22	55.53	56.63	59.39	66.28	67.66	75.65	77.30
1.029	35	6.141	36	6.316	37.07	38.45	39.82	41.20	42.58	45.34	51.95	55.26	56.36	59.11	66.00	67.38	75.37	77.03
1.030	33	5.790	34	5.965	37.62	39.00	40.37	41.75	43.13	45.89	52.50	55.81	56.91	59.66	66.55	67.93	75.92	77.58
1.031	32	5.614	33	5.790	37.89	39.27	40.65	42.03	43.40	46.16	52.77	56.08	57.18	59.94	66.83	68.21	76.20	77.85
1.032	31	5.439	32	5.614	38.17	39.55	40.92	42.30	43.68	46.44	53.05	56.36	57.46	60.21	67.10	68.48	76.47	78.13
1.033	30	5.263	31	5.439	38.44	39.82	41.20	42.58	43.95	46.71	53.32	56.63	57.73	60.49	67.38	68.76	76.75	78.40
1.034	29	5.088	30	5.263	38.72	40.10	41.48	42.86	44.23	46.99	53.60	56.91	58.01	60.77	67.66	69.04	77.03	78.68
1.036	28	4.912	29	5.088	39.00	40.38	41.75	43.13	44.51	47.27	53.88	57.19	58.29	61.04	67.93	69.31	77.30	78.96
1.042	48	8.421	50	8.772	33.35	34.73	36.10	37.48	38.86	41.62	48.23	51.54	52.64	55.39	62.28	63.66	71.65	73.31
1.047	43	7.544	45	7.895	34.72	36.10	37.48	38.86	40.23	42.99	49.60	52.91	54.01	56.77	63.66	65.04	73.03	74.68
1.050	60	10.527	63	11.053	29.90	31.28	32.66	34.04	35.41	38.17	44.78	48.09	49.19	51.95	58.84	60.22	68.21	69.86
1.053	38	6.667	40	7.018	36.10	37.48	38.86	40.24	41.61	44.37	50.98	54.29	55.39	58.15	65.04	66.42	74.41	76.06
1.054	37	6.492	39	6.842	36.38	37.76	39.13	40.51	41.89	44.65	51.26	54.57	55.67	58.42	65.31	66.69	74.68	76.34
1.056	36	6.316	38	6.667	36.65	38.03	39.41	40.79	42.16	44.92	51.53	54.84	55.94	58.70	65.59	66.97	74.96	76.61
1.056	71	12.457	75	13.158	26.73	28.11	29.48	30.87	32.24	35.00	41.61	44.92	46.02	48.78	55.67	57.05	65.04	66.69
1.057	35	6.141	37	6.492	36.93	38.31	39.68	41.06	42.44	45.20	51.81	55.12	56.22	58.97	65.86	67.24	75.23	76.89
1.057	53	9.299	56	9.825	31.83	33.21	34.58	35.96	37.34	40.10	46.71	50.02	51.12	53.87	60.76	62.14	70.13	71.79
1.059	34	5.965	36	6.316	37.20	38.58	39.96	41.34	42.71	45.47	52.08	55.39	56.49	59.25	66.14	67.52	75.51	77.16
1.060	50	8.772	53	9.299	32.66	34.04	35.41	36.79	38.17	40.93	47.54	50.85	51.95	54.70	61.59	62.97	70.96	72.62
1.060	67	11.755	71	12.457	27.83	29.21	30.59	31.97	33.34	36.10	42.71	46.02	47.12	49.88	56.77	58.15	66.14	67.79
1.061	33	5.790	35	6.141	37.48	38.86	40.23	41.61	42.99	45.75	52.36	55.67	56.77	59.52	66.41	67.79	75.78	77.44
1.063	32	5.614	34	5.965	37.76	39.14	40.51	41.89	43.27	46.03	52.64	55.95	57.05	59.80	66.69	68.07	76.06	77.72
1.063	63	11.053	67	11.755	28.93	30.31	31.69	33.07	34.44	37.20	43.82	47.13	48.23	50.98	57.87	59.25	67.24	68.90
1.065	31	5.439	33	5.790	38.03	39.41	40.79	42.17	43.54	46.30	52.91	56.22	57.32	60.08	66.97	68.35	76.34	77.99
1.067	30	5.263	32	5.614	38.31	39.69	41.06	42.44	43.82	46.58	53.19	56.50	57.60	60.35	67.24	68.62	76.61	78.27
1.067	45	7.895	48	8.421	34.03	35.41	36.79	38.17	39.54	42.30	48.91	52.22	53.32	56.08	62.97	64.35	72.34	73.99
1.067	75	13.158	80	14.036	25.49	26.87	28.24	29.62	31.00	33.76	40.37	43.68	44.78	47.53	54.43	55.81	63.80	65.45
1.069	29	5.088	31	5.439	38.58	39.96	41.34	42.72	44.09	46.85	53.46	56.77	57.87	60.63	67.52	68.90	76.89	78.54
1.071	28	4.912	30	5.263	38.86	40.24	41.61	42.99	44.37	47.13	53.74	57.05	58.15	60.90	67.79	69.17	77.16	78.82
1.071	56	9.825	60	10.527	30.86	32.24	33.62	35.00	36.37	39.13	45.74	49.05	50.15	52.91	59.80	61.18	69.17	70.82
1.075	40	7.018	43	7.544	35.41	36.79	38.17	39.55	40.92	43.68	50.29	53.60	54.70	57.46	64.35	65.73	73.72	75.37
1.081	37	6.492	40	7.018	36.24	37.62	38.99	40.37	41.75	44.51	51.12	54.43	55.53	58.28	65.17	66.55	74.54	76.20
1.083	36	6.316	39	6.842	36.51	37.89	39.27	40.65	42.02	44.78	51.40	54.71	55.81	58.56	65.45	66.83	74.82	76.48
1.086	35	6.141	38	6.667	36.79	38.17	39.54	40.92	42.30	45.06	51.67	54.98	56.08	58.84	65.73	67.11	75.10	76.75
1.088	34	5.965	37	6.492	37.07	38.45	39.82	41.20	42.58	45.34	51.95	55.26	56.36	59.11	66.00	67.38	75.37	77.03
1.091	33	5.790	36	6.316	37.34	38.72	40.10	41.48	42.85	45.61	52.22	55.53	56.63	59.39	66.28	67.66	75.65	77.30
1.094	32	5.614	35	6.141	37.62	39.00	40.37	41.75	43.13	45.89	52.50	55.81	56.91	59.66	66.55	67.93	75.92	77.58
1.097	31	5.439	34	5.965	37.89	39.27	40.65	42.03	43.40	46.16	52.77	56.08	57.18	59.94	66.83	68.21	76.20	77.85
1.100	30	5.263	33	5.790	38.17	39.55	40.92	42.30	43.68	46.44	53.05	56.36	57.46	60.21	67.10	68.48	76.47	78.13
1.103	29	5.088	32	5.614	38.44	39.82	41.20	42.58	43.95	46.71	53.32	56.63	57.73	60.49	67.38	68.76	76.75	78.40
1.103	39	6.842	43	7.544	35.55	36.93	38.30	39.68	41.06	43.82	50.43	53.74	54.84	57.60	64.49	65.87	73.86	75.51
1.104	48	8.421	53	9.299	32.93	34.31	35.69	37.07	38.44	41.20	47.81	51.12	52.22	54.98	61.87	63.25	71.24	72.89
Length factor*					**1.01**	**1.02**	**1.03**	**1.04**	**1.05**	**1.07**	**1.12**	**1.14**	**1.14**	**1.16**	**1.19**	**1.20**	**1.24**	**1.25**

* The length correction factor must be used to determine the proper belt width.

Selection program available online at ptwizard.com and passport.baldor.com

HT500 selection table – 14mm pitch HT500 belts

Speed ratio	Sprocket combinations: Driver No. of teeth	Driver Pitch dia. inches	Driven No. of teeth	Driven Pitch dia. inches	Center distance, inches: 994-14MX	1120-14MX	1190-14MX	1260-14MX	1400-14MX	1568-14MX	1610-14MX	1750-14MX	1890-14MX	1960-14MX	2100-14MX	2240-14MX	2310-14MX
Length factor*					**0.68**	**0.73**	**0.75**	**0.77**	**0.81**	**0.85**	**0.86**	**0.89**	**0.92**	**0.94**	**0.96**	**0.99**	**1.00**
1.107	28	4.912	31	5.439	11.43	13.91	15.29	16.67	19.43	22.73	23.56	26.32	29.07	30.45	33.21	35.96	37.34
1.111	36	6.316	40	7.018	9.09	11.57	12.95	14.33	17.08	20.39	21.22	23.97	26.73	28.11	30.87	33.62	35.00
1.111	45	7.895	50	8.772			10.33	11.71	14.46	17.77	18.60	21.36	24.11	25.49	28.25	31.00	32.38
1.114	35	6.141	39	6.842	9.36	11.84	13.22	14.60	17.36	20.67	21.50	24.25	27.01	28.39	31.14	33.90	35.27
1.116	43	7.544	48	8.421		9.50	10.88	12.26	15.01	18.32	19.15	21.91	24.66	26.04	28.80	31.55	32.93
1.117	60	10.527	67	11.755						13.35	14.18	16.94	19.70	21.08	23.83	26.59	27.96
1.118	34	5.965	38	6.667	9.64	12.12	13.50	14.88	17.64	20.94	21.77	24.53	27.28	28.66	31.42	34.17	35.55
1.119	67	11.755	75	13.158								14.87	17.62	19.01	21.76	24.52	25.89
1.120	50	8.772	56	9.825				10.19	12.94	16.25	17.08	19.84	22.59	23.97	26.73	29.48	30.86
1.121	33	5.790	37	6.492	9.91	12.39	13.77	15.15	17.91	21.22	22.05	24.80	27.56	28.94	31.69	34.45	35.82
1.125	32	5.614	36	6.316	10.19	12.67	14.05	15.43	18.19	21.49	22.32	25.08	27.83	29.21	31.97	34.72	36.10
1.125	40	7.018	45	7.895		10.32	11.70	13.09	15.84	19.15	19.98	22.73	25.49	26.87	29.62	32.38	33.75
1.125	56	9.825	63	11.053					11.15	14.45	15.29	18.04	20.80	22.18	24.93	27.69	29.07
1.125	80	14.036	90	15.790											17.89	20.65	22.03
1.127	63	11.053	71	12.457							13.21	15.97	18.73	20.11	22.86	25.62	27.00
1.127	71	12.457	80	14.036									16.38	17.76	20.52	23.27	24.65
1.129	31	5.439	35	6.141	10.46	12.95	14.33	15.71	18.46	21.77	22.60	25.35	28.11	29.49	32.24	35.00	36.37
1.132	38	6.667	43	7.544	8.39	10.87	12.26	13.64	16.39	19.70	20.53	23.28	26.04	27.42	30.18	32.93	34.31
1.132	53	9.299	60	10.527					11.97	15.28	16.11	18.87	21.62	23.01	25.76	28.52	29.89
1.133	30	5.263	34	5.965	10.74	13.22	14.60	15.98	18.74	22.04	22.87	25.63	28.38	29.76	32.52	35.27	36.65
1.138	29	5.088	33	5.790	11.02	13.50	14.88	16.26	19.01	22.32	23.15	25.90	28.66	30.04	32.79	35.55	36.92
1.143	28	4.912	32	5.614	11.29	13.77	15.15	16.53	19.29	22.60	23.43	26.18	28.94	30.32	33.07	35.83	37.20
1.143	35	6.141	40	7.018	9.22	11.70	13.08	14.46	17.22	20.53	21.36	24.11	26.87	28.25	31.00	33.76	35.13
1.147	34	5.965	39	6.842	9.50	11.98	13.36	14.74	17.50	20.80	21.63	24.39	27.14	28.52	31.28	34.03	35.41
1.152	33	5.790	38	6.667	9.77	12.25	13.63	15.01	17.77	21.08	21.91	24.66	27.42	28.80	31.55	34.31	35.68
1.154	39	6.842	45	7.895		10.46	11.84	13.22	15.98	19.28	20.11	22.87	25.63	27.01	29.76	32.52	33.89
1.156	32	5.614	37	6.492	10.05	12.53	13.91	15.29	18.05	21.35	22.18	24.94	27.69	29.07	31.83	34.58	35.96
1.161	31	5.439	36	6.316	10.32	12.81	14.19	15.57	18.32	21.63	22.46	25.21	27.97	29.35	32.10	34.86	36.23
1.162	37	6.492	43	7.544	8.52	11.01	12.39	13.77	16.53	19.83	20.66	23.42	26.18	27.56	30.31	33.07	34.44
1.163	43	7.544	50	8.772		9.21	10.59	11.97	14.73	18.04	18.87	21.63	24.38	25.76	28.52	31.27	32.65
1.167	30	5.263	35	6.141	10.60	13.08	14.46	15.84	18.60	21.90	22.73	25.49	28.24	29.63	32.38	35.14	36.51
1.167	48	8.421	56	9.825				10.45	13.21	16.52	17.35	20.11	22.86	24.24	27.00	29.76	31.13
1.172	29	5.088	34	5.965	10.88	13.36	14.74	16.12	18.87	22.18	23.01	25.77	28.52	29.90	32.66	35.41	36.79
1.176	34	5.965	40	7.018	9.35	11.84	13.22	14.60	17.36	20.66	21.49	24.25	27.00	28.38	31.14	33.89	35.27
1.178	45	7.895	53	9.299			9.90	11.28	14.04	17.35	18.18	20.93	23.69	25.07	27.83	30.58	31.96
1.179	28	4.912	33	5.790	11.15	13.63	15.01	16.39	19.15	22.46	23.29	26.04	28.80	30.18	32.93	35.69	37.06
1.182	33	5.790	39	6.842	9.63	12.11	13.49	14.87	17.63	20.94	21.77	24.52	27.28	28.66	31.41	34.17	35.54
1.183	60	10.527	71	12.457						12.78	13.61	16.37	19.13	20.51	23.27	26.03	27.40
1.184	38	6.667	45	7.895	8.10	10.59	11.97	13.35	16.11	19.42	20.25	23.00	25.76	27.14	29.90	32.65	34.03
1.188	32	5.614	38	6.667	9.91	12.39	13.77	15.15	17.91	21.21	22.04	24.80	27.55	28.93	31.69	34.45	35.82
1.189	53	9.299	63	11.053					11.54	14.85	15.69	18.44	21.20	22.58	25.34	28.10	29.47
1.190	63	11.053	75	13.158								15.40	18.16	19.54	22.30	25.06	26.43
1.194	31	5.439	37	6.492	10.18	12.66	14.04	15.43	18.18	21.49	22.32	25.07	27.83	29.21	31.97	34.72	36.10
1.194	36	6.316	43	7.544	8.66	11.14	12.52	13.91	16.66	19.97	20.80	23.56	26.31	27.69	30.45	33.20	34.58
1.194	67	11.755	80	14.036								14.15	16.91	18.29	21.05	23.81	25.19
1.196	56	9.825	67	11.755						13.88	14.71	17.47	20.23	21.61	24.37	27.13	28.50
1.200	30	5.263	36	6.316	10.46	12.94	14.32	15.70	18.46	21.76	22.59	25.35	28.11	29.49	32.24	35.00	36.37
1.200	40	7.018	48	8.421		9.89	11.28	12.66	15.42	18.73	19.56	22.31	25.07	26.45	29.21	31.96	33.34
1.200	50	8.772	60	10.527					12.37	15.68	16.51	19.27	22.03	23.41	26.17	28.92	30.30
1.200	75	13.158	90	15.790										15.79	18.56	21.32	22.70
1.207	29	5.088	35	6.141	10.73	13.22	14.60	15.98	18.73	22.04	22.87	25.63	28.38	29.76	32.52	35.27	36.65
1.212	33	5.790	40	7.018	9.49	11.97	13.35	14.73	17.49	20.80	21.63	24.38	27.14	28.52	31.27	34.03	35.41
1.214	28	4.912	34	5.965	11.01	13.49	14.87	16.25	19.01	22.32	23.15	25.90	28.66	30.04	32.79	35.55	36.92
1.216	37	6.492	45	7.895	8.24	10.72	12.11	13.49	16.25	19.55	20.38	23.14	25.90	27.28	30.03	32.79	34.16
1.219	32	5.614	39	6.842	9.76	12.25	13.63	15.01	17.77	21.07	21.90	24.66	27.42	28.80	31.55	34.31	35.68
1.226	31	5.439	38	6.667	10.04	12.52	13.90	15.28	18.04	21.35	22.18	24.93	27.69	29.07	31.83	34.58	35.96
1.229	35	6.141	43	7.544	8.79	11.28	12.66	14.04	16.80	20.10	20.94	23.69	26.45	27.83	30.58	33.34	34.71
1.231	39	6.842	48	8.421		10.03	11.41	12.79	15.55	18.86	19.69	22.45	25.21	26.59	29.34	32.10	33.47
1.233	30	5.263	37	6.492	10.31	12.80	14.18	15.56	18.32	21.62	22.45	25.21	27.97	29.35	32.10	34.86	36.23
1.233	43	7.544	53	9.299			10.16	11.54	14.30	17.61	18.45	21.20	23.96	25.34	28.10	30.85	32.23
1.241	29	5.088	36	6.316	10.59	13.07	14.46	15.84	18.59	21.90	22.73	25.49	28.24	29.62	32.38	35.13	36.51
1.244	45	7.895	56	9.825				10.84	13.61	16.92	17.75	20.51	23.27	24.65	27.41	30.16	31.54
1.250	28	4.912	35	6.141	10.87	13.35	14.73	16.11	18.87	22.18	23.01	25.76	28.52	29.90	32.65	35.41	36.78
1.250	32	5.614	40	7.018	9.62	12.10	13.49	14.87	17.62	20.93	21.76	24.52	27.27	28.66	31.41	34.17	35.54
1.250	36	6.316	45	7.895	8.37	10.85	12.24	13.62	16.38	19.69	20.52	23.28	26.03	27.41	30.17	32.92	34.30
1.250	40	7.018	50	8.772		9.60	10.99	12.37	15.13	18.44	19.27	22.03	24.79	26.17	28.93	31.68	33.06
1.250	48	8.421	60	10.527					12.63	15.95	16.78	19.54	22.30	23.68	26.44	29.19	30.57
1.250	60	10.527	75	13.158							13.03	15.79	18.56	19.94	22.70	25.46	26.84
1.258	31	5.439	39	6.842	9.89	12.38	13.76	15.14	17.90	21.21	22.04	24.79	27.55	28.93	31.69	34.44	35.82
1.260	50	8.772	63	11.053					11.93	15.25	16.08	18.84	21.60	22.99	25.74	28.50	29.88
1.263	38	6.667	48	8.421		10.16	11.54	12.93	15.69	18.99	19.83	22.58	25.34	26.72	29.48	32.23	33.61
Length Factor*					**0.68**	**0.73**	**0.75**	**0.77**	**0.81**	**0.85**	**0.86**	**0.89**	**0.92**	**0.94**	**0.96**	**0.99**	**1.00**

* The length correction factor must be used to determine the proper belt width.

Selection program available online at ptwizard.com and passport.baldor.com

HT500 selection table – 14mm pitch HT500 belts (continued)

Speed ratio	Sprocket combinations				Center distance, inches													
	Driver		Driven															
	No. of teeth	Pitch dia. inches	No. of teeth	Pitch dia. inches	2380-14MX	2450-14MX	2520-14MX	2590-14MX	2660-14MX	2800-14MX	3136-14MX	3304-14MX	3360-14MX	3500-14MX	3850-14MX	3920-14MX	4326-14MX	4410-14MX
Length factor*					**1.01**	**1.02**	**1.03**	**1.04**	**1.05**	**1.07**	**1.12**	**1.14**	**1.14**	**1.16**	**1.19**	**1.20**	**1.24**	**1.25**
1.107	28	4.912	31	5.439	38.72	40.10	41.47	42.85	44.23	46.99	53.60	56.91	58.01	60.76	67.65	69.03	77.02	78.68
1.111	36	6.316	40	7.018	36.38	37.76	39.13	40.51	41.89	44.65	51.26	54.57	55.67	58.42	65.31	66.69	74.68	76.34
1.111	45	7.895	50	8.772	33.76	35.14	36.51	37.89	39.27	42.03	48.64	51.95	53.05	55.80	62.69	64.07	72.06	73.72
1.114	35	6.141	39	6.842	36.65	38.03	39.41	40.79	42.16	44.92	51.53	54.84	55.94	58.70	65.59	66.97	74.96	76.61
1.116	43	7.544	48	8.421	34.31	35.69	37.06	38.44	39.82	42.58	49.19	52.50	53.60	56.35	63.24	64.62	72.61	74.27
1.117	60	10.527	67	11.755	29.34	30.72	32.10	33.48	34.85	37.61	44.23	47.54	48.64	51.39	58.28	59.66	67.65	69.31
1.118	34	5.965	38	6.667	36.93	38.31	39.68	41.06	42.44	45.20	51.81	55.12	56.22	58.97	65.86	67.24	75.23	76.89
1.119	67	11.755	75	13.158	27.27	28.65	30.03	31.41	32.79	35.55	42.16	45.47	46.57	49.32	56.21	57.59	65.58	67.24
1.120	50	8.772	56	9.825	32.24	33.62	34.99	36.38	37.75	40.51	47.12	50.43	51.53	54.29	61.18	62.56	70.55	72.20
1.121	33	5.790	37	6.492	37.20	38.58	39.96	41.34	42.71	45.47	52.08	55.39	56.49	59.25	66.14	67.52	75.51	77.16
1.125	32	5.614	36	6.316	37.48	38.86	40.23	41.61	42.99	45.75	52.36	55.67	56.77	59.52	66.41	67.79	75.78	77.44
1.125	40	7.018	45	7.895	35.13	36.51	37.89	39.27	40.64	43.41	50.02	53.33	54.43	57.18	64.07	65.45	73.44	75.10
1.125	56	9.825	63	11.053	30.45	31.83	33.20	34.58	35.96	38.72	45.33	48.64	49.74	52.49	59.38	60.76	68.75	70.41
1.125	80	14.036	90	15.790	23.41	24.79	26.17	27.55	28.92	31.68	38.29	41.61	42.71	45.46	52.35	53.73	61.72	63.38
1.127	63	11.053	71	12.457	28.38	29.76	31.13	32.51	33.89	36.65	43.26	46.57	47.67	50.43	57.32	58.70	66.69	68.34
1.127	71	12.457	80	14.036	26.03	27.41	28.79	30.17	31.54	34.30	40.91	44.23	45.33	48.08	54.97	56.35	64.34	66.00
1.129	31	5.439	35	6.141	37.75	39.13	40.51	41.89	43.26	46.02	52.63	55.94	57.04	59.80	66.69	68.07	76.06	77.71
1.132	38	6.667	43	7.544	35.69	37.07	38.44	39.82	41.20	43.96	50.57	53.88	54.98	57.73	64.62	66.00	73.99	75.65
1.132	53	9.299	60	10.527	31.27	32.65	34.03	35.41	36.78	39.54	46.15	49.46	50.56	53.32	60.21	61.59	69.58	71.24
1.133	30	5.263	34	5.965	38.03	39.41	40.79	42.17	43.54	46.30	52.91	56.22	57.32	60.08	66.97	68.35	76.34	77.99
1.138	29	5.088	33	5.790	38.30	39.68	41.06	42.44	43.82	46.58	53.19	56.50	57.60	60.35	67.24	68.62	76.61	78.27
1.143	28	4.912	32	5.614	38.58	39.96	41.34	42.72	44.09	46.85	53.46	56.77	57.87	60.63	67.52	68.90	76.89	78.54
1.143	35	6.141	40	7.018	36.51	37.89	39.27	40.65	42.02	44.78	51.39	54.70	55.80	58.56	65.45	66.83	74.82	76.47
1.147	34	5.965	39	6.842	36.79	38.17	39.54	40.92	42.30	45.06	51.67	54.98	56.08	58.83	65.72	67.10	75.10	76.75
1.152	33	5.790	38	6.667	37.06	38.44	39.82	41.20	42.57	45.33	51.94	55.25	56.35	59.11	66.00	67.38	75.37	77.03
1.154	39	6.842	45	7.895	35.27	36.65	38.03	39.41	40.78	43.54	50.15	53.46	54.56	57.32	64.21	65.59	73.58	75.23
1.156	32	5.614	37	6.492	37.34	38.72	40.09	41.47	42.85	45.61	52.22	55.53	56.63	59.39	66.28	67.66	75.65	77.30
1.161	31	5.439	36	6.316	37.62	39.00	40.37	41.75	43.13	45.89	52.50	55.81	56.91	59.66	66.55	67.93	75.92	77.58
1.162	37	6.492	43	7.544	35.82	37.20	38.58	39.96	41.33	44.09	50.70	54.01	55.11	57.87	64.76	66.14	74.13	75.78
1.163	43	7.544	50	8.772	34.03	35.41	36.79	38.17	39.54	42.30	48.91	52.22	53.32	56.08	62.97	64.35	72.34	73.99
1.167	30	5.263	35	6.141	37.89	39.27	40.65	42.03	43.40	46.16	52.77	56.08	57.18	59.94	66.83	68.21	76.20	77.85
1.167	48	8.421	56	9.825	32.51	33.89	35.27	36.65	38.02	40.78	47.39	50.70	51.80	54.56	61.45	62.83	70.82	72.48
1.172	29	5.088	34	5.965	38.17	39.55	40.92	42.30	43.68	46.44	53.05	56.36	57.46	60.21	67.10	68.48	76.47	78.13
1.176	34	5.965	40	7.018	36.65	38.03	39.40	40.78	42.16	44.92	51.53	54.84	55.94	58.70	65.59	66.97	74.96	76.61
1.178	45	7.895	53	9.299	33.34	34.72	36.09	37.47	38.85	41.61	48.22	51.53	52.63	55.39	62.28	63.66	71.65	73.30
1.179	28	4.912	33	5.790	38.44	39.82	41.20	42.58	43.95	46.71	53.32	56.63	57.73	60.49	67.38	68.76	76.75	78.40
1.182	33	5.790	39	6.842	36.93	38.31	39.68	41.06	42.44	45.20	51.81	55.12	56.22	58.97	65.86	67.24	75.23	76.89
1.183	60	10.527	71	12.457	28.78	30.16	31.54	32.92	34.29	37.06	43.67	46.98	48.08	50.83	57.73	59.11	67.10	68.75
1.184	38	6.667	45	7.895	35.41	36.79	38.16	39.54	40.92	43.68	50.29	53.60	54.70	57.45	64.35	65.73	73.72	75.37
1.188	32	5.614	38	6.667	37.20	38.58	39.96	41.34	42.71	45.47	52.08	55.39	56.49	59.25	66.14	67.52	75.51	77.16
1.189	53	9.299	63	11.053	30.85	32.23	33.61	34.99	36.37	39.13	45.74	49.05	50.15	52.90	59.79	61.17	69.17	70.82
1.190	63	11.053	75	13.158	27.81	29.20	30.57	31.95	33.33	36.09	42.70	46.01	47.11	49.87	56.76	58.14	66.13	67.79
1.194	31	5.439	37	6.492	37.48	38.86	40.23	41.61	42.99	45.75	52.36	55.67	56.77	59.52	66.41	67.79	75.78	77.44
1.194	36	6.316	43	7.544	35.96	37.34	38.71	40.09	41.47	44.23	50.84	54.15	55.25	58.01	64.90	66.28	74.27	75.92
1.194	67	11.755	80	14.036	26.57	27.95	29.33	30.71	32.08	34.85	41.46	44.77	45.87	48.63	55.52	56.90	64.89	66.54
1.196	56	9.825	67	11.755	29.89	31.27	32.64	34.02	35.40	38.16	44.77	48.08	49.18	51.94	58.83	60.21	68.20	69.85
1.200	30	5.263	36	6.316	37.75	39.13	40.51	41.89	43.26	46.02	52.63	55.94	57.04	59.80	66.69	68.07	76.06	77.71
1.200	40	7.018	48	8.421	34.72	36.10	37.47	38.85	40.23	42.99	49.60	52.91	54.01	56.76	63.66	65.04	73.03	74.68
1.200	50	8.772	60	10.527	31.68	33.06	34.44	35.82	37.19	39.95	46.56	49.87	50.98	53.73	60.62	62.00	69.99	71.65
1.200	75	13.158	90	15.790	24.08	25.46	26.84	28.22	29.60	32.36	38.97	42.28	43.38	46.14	53.03	54.41	62.41	64.06
1.207	29	5.088	35	6.141	38.03	39.41	40.78	42.16	43.54	46.30	52.91	56.22	57.32	60.07	66.96	68.34	76.33	77.99
1.212	33	5.790	40	7.018	36.79	38.17	39.54	40.92	42.30	45.06	51.67	54.98	56.08	58.83	65.72	67.10	75.09	76.75
1.214	28	4.912	34	5.965	38.30	39.68	41.06	42.44	43.81	46.57	53.18	56.49	57.59	60.35	67.24	68.62	76.61	78.27
1.216	37	6.492	45	7.895	35.54	36.92	38.30	39.68	41.05	43.81	50.43	53.74	54.84	57.59	64.48	65.86	73.85	75.51
1.219	32	5.614	39	6.842	37.06	38.44	39.82	41.20	42.57	45.33	51.94	55.25	56.35	59.11	66.00	67.38	75.37	77.02
1.226	31	5.439	38	6.667	37.34	38.72	40.09	41.47	42.85	45.61	52.22	55.53	56.63	59.38	66.27	67.65	75.64	77.30
1.229	35	6.141	43	7.544	36.10	37.48	38.85	40.23	41.61	44.37	50.98	54.29	55.39	58.14	65.03	66.41	74.40	76.06
1.231	39	6.842	48	8.421	34.85	36.23	37.61	38.99	40.36	43.13	49.74	53.05	54.15	56.90	63.79	65.17	73.16	74.82
1.233	30	5.263	37	6.492	37.61	38.99	40.37	41.75	43.12	45.88	52.49	55.80	56.90	59.66	66.55	67.93	75.92	77.58
1.233	43	7.544	53	9.299	33.61	34.99	36.37	37.75	39.12	41.88	48.49	51.80	52.90	55.66	62.55	63.93	71.92	73.58
1.241	29	5.088	36	6.316	37.89	39.27	40.64	42.02	43.40	46.16	52.77	56.08	57.18	59.94	66.83	68.21	76.20	77.85
1.244	45	7.895	56	9.825	32.92	34.30	35.67	37.06	38.43	41.19	47.80	51.11	52.21	54.97	61.86	63.24	71.23	72.89
1.250	28	4.912	35	6.141	38.16	39.54	40.92	42.30	43.67	46.43	53.05	56.36	57.46	60.21	67.10	68.48	76.47	78.13
1.250	32	5.614	40	7.018	36.92	38.30	39.68	41.06	42.43	45.19	51.80	55.11	56.21	58.97	65.86	67.24	75.23	76.89
1.250	36	6.316	45	7.895	35.68	37.06	38.44	39.82	41.19	43.95	50.56	53.87	54.97	57.73	64.62	66.00	73.99	75.64
1.250	40	7.018	50	8.772	34.44	35.82	37.19	38.57	39.95	42.71	49.32	52.63	53.73	56.49	63.38	64.76	72.75	74.40
1.250	48	8.421	60	10.527	31.95	33.33	34.71	36.09	37.46	40.22	46.84	50.15	51.25	54.00	60.89	62.27	70.27	71.92
1.250	60	10.527	75	13.158	28.22	29.60	30.97	32.36	33.73	36.49	43.11	46.42	47.52	50.28	57.17	58.55	66.54	68.20
1.258	31	5.439	39	6.842	37.20	38.58	39.95	41.33	42.71	45.47	52.08	55.39	56.49	59.25	66.14	67.52	75.51	77.16
1.260	50	8.772	63	11.053	31.26	32.64	34.02	35.40	36.77	39.53	46.15	49.46	50.56	53.31	60.20	61.58	69.58	71.23
1.263	38	6.667	48	8.421	34.99	36.37	37.74	39.13	40.50	43.26	49.87	53.18	54.28	57.04	63.93	65.31	73.30	74.95
Length Factor*					**1.01**	**1.02**	**1.03**	**1.04**	**1.05**	**1.07**	**1.12**	**1.14**	**1.14**	**1.16**	**1.19**	**1.20**	**1.24**	**1.25**

* The length correction factor must be used to determine the proper belt width.

Selection program available online at ptwizard.com and passport.baldor.com

HT500 selection table – 14mm pitch HT500 belts

Speed ratio	Sprocket combinations: Driver No. of teeth	Driver Pitch dia. inches	Driven No. of teeth	Driven Pitch dia. inches	Center distance, inches: 994-14MX	1120-14MX	1190-14MX	1260-14MX	1400-14MX	1568-14MX	1610-14MX	1750-14MX	1890-14MX	1960-14MX	2100-14MX	2240-14MX	2310-14MX
Length factor*					**0.68**	**0.73**	**0.75**	**0.77**	**0.81**	**0.85**	**0.86**	**0.89**	**0.92**	**0.94**	**0.96**	**0.99**	**1.00**
1.264	53	9.299	67	11.755						14.28	15.11	17.87	20.63	22.01	24.77	27.53	28.91
1.265	34	5.965	43	7.544	8.92	11.41	12.79	14.17	16.93	20.24	21.07	23.83	26.58	27.96	30.72	33.48	34.85
1.267	30	5.263	38	6.667	10.17	12.66	14.04	15.42	18.18	21.48	22.31	25.07	27.83	29.21	31.96	34.72	36.09
1.268	56	9.825	71	12.457						13.30	14.13	16.90	19.66	21.04	23.80	26.56	27.94
1.268	71	12.457	90	15.790									14.93	16.31	19.08	21.85	23.23
1.270	63	11.053	80	14.036								14.67	17.44	18.82	21.58	24.34	25.72
1.276	29	5.088	37	6.492	10.45	12.93	14.31	15.69	18.45	21.76	22.59	25.35	28.10	29.48	32.24	34.99	36.37
1.282	39	6.842	50	8.772		9.73	11.12	12.50	15.27	18.58	19.41	22.17	24.92	26.30	29.06	31.82	33.19
1.286	28	4.912	36	6.316	10.72	13.21	14.59	15.97	18.73	22.04	22.87	25.62	28.38	29.76	32.51	35.27	36.64
1.286	35	6.141	45	7.895	8.50	10.99	12.37	13.75	16.51	19.82	20.65	23.41	26.17	27.55	30.30	33.06	34.43
1.290	31	5.439	40	7.018	9.75	12.24	13.62	15.00	17.76	21.07	21.90	24.65	27.41	28.79	31.55	34.30	35.68
1.297	37	6.492	48	8.421		10.29	11.67	13.06	15.82	19.13	19.96	22.72	25.47	26.86	29.61	32.37	33.74
1.300	30	5.263	39	6.842	10.03	12.51	13.90	15.28	18.04	21.34	22.17	24.93	27.69	29.07	31.82	34.58	35.95
1.302	43	7.544	56	9.825			9.72	11.10	13.87	17.19	18.02	20.78	23.54	24.92	27.67	30.43	31.81
1.303	33	5.790	43	7.544	9.05	11.54	12.92	14.31	17.06	20.37	21.20	23.96	26.72	28.10	30.86	33.61	34.99
1.310	29	5.088	38	6.667	10.30	12.79	14.17	15.55	18.31	21.62	22.45	25.21	27.96	29.34	32.10	34.85	36.23
1.313	48	8.421	63	11.053					12.19	15.51	16.35	19.11	21.87	23.25	26.01	28.77	30.15
1.316	38	6.667	50	8.772		9.86	11.25	12.64	15.40	18.71	19.54	22.30	25.06	26.44	29.20	31.95	33.33
1.321	28	4.912	37	6.492	10.58	13.06	14.45	15.83	18.59	21.89	22.72	25.48	28.24	29.62	32.37	35.13	36.50
1.324	34	5.965	45	7.895	8.63	11.12	12.50	13.89	16.65	19.96	20.79	23.54	26.30	27.68	30.44	33.20	34.57
1.325	40	7.018	53	9.299		9.16	10.55	11.94	14.70	18.01	18.85	21.60	24.36	25.74	28.50	31.26	32.63
1.333	30	5.263	40	7.018	9.88	12.37	13.75	15.13	17.89	21.20	22.03	24.79	27.55	28.93	31.68	34.44	35.81
1.333	36	6.316	48	8.421		10.42	11.80	13.19	15.95	19.26	20.09	22.85	25.61	26.99	29.75	32.50	33.88
1.333	45	7.895	60	10.527				10.25	13.02	16.34	17.18	19.94	22.70	24.08	26.84	29.60	30.97
1.333	60	10.527	80	14.036								15.06	17.83	19.21	21.98	24.74	26.12
1.339	56	9.825	75	13.158						12.70	13.54	16.31	19.08	20.47	23.23	25.99	27.37
1.340	50	8.772	67	11.755					11.34	14.67	15.50	18.27	21.03	22.41	25.17	27.93	29.31
1.340	53	9.299	71	12.457						13.69	14.52	17.29	20.06	21.44	24.20	26.96	28.34
1.343	67	11.755	90	15.790									15.44	16.83	19.60	22.37	23.75
1.344	32	5.614	43	7.544	9.18	11.67	13.06	14.44	17.20	20.51	21.34	24.10	26.85	28.23	30.99	33.75	35.12
1.345	29	5.088	39	6.842	10.16	12.64	14.03	15.41	18.17	21.48	22.31	25.06	27.82	29.20	31.96	34.71	36.09
1.351	37	6.492	50	8.772		9.99	11.38	12.77	15.53	18.84	19.67	22.43	25.19	26.57	29.33	32.09	33.46
1.357	28	4.912	38	6.667	10.43	12.92	14.30	15.69	18.45	21.75	22.58	25.34	28.10	29.48	32.23	34.99	36.37
1.359	39	6.842	53	9.299		9.29	10.68	12.07	14.83	18.15	18.98	21.74	24.50	25.88	28.64	31.39	32.77
1.364	33	5.790	45	7.895	8.75	11.25	12.63	14.02	16.78	20.09	20.92	23.68	26.44	27.82	30.57	33.33	34.71
1.371	35	6.141	48	8.421	8.05	10.55	11.93	13.32	16.08	19.39	20.23	22.98	25.74	27.12	29.88	32.64	34.01
1.379	29	5.088	40	7.018	10.01	12.50	13.88	15.27	18.03	21.34	22.17	24.92	27.68	29.06	31.82	34.57	35.95
1.387	31	5.439	43	7.544	9.31	11.80	13.19	14.57	17.33	20.64	21.47	24.23	26.99	28.37	31.13	33.88	35.26
1.389	36	6.316	50	8.772		10.12	11.51	12.90	15.66	18.98	19.81	22.57	25.33	26.71	29.46	32.22	33.60
1.393	28	4.912	39	6.842	10.29	12.78	14.16	15.54	18.30	21.61	22.44	25.20	27.96	29.34	32.09	34.85	36.23
1.395	38	6.667	53	9.299		9.41	10.81	12.19	14.96	18.28	19.11	21.87	24.63	26.01	28.77	31.53	32.90
1.395	43	7.544	60	10.527				10.51	13.28	16.61	17.44	20.20	22.96	24.35	27.11	29.86	31.24
1.396	48	8.421	67	11.755					11.59	14.93	15.76	18.53	21.29	22.68	25.44	28.20	29.58
1.400	40	7.018	56	9.825			10.10	11.49	14.26	17.58	18.41	21.18	23.94	25.32	28.08	30.83	32.21
1.400	45	7.895	63	11.053					12.58	15.90	16.74	19.50	22.27	23.65	26.41	29.17	30.55
1.400	80	14.036	112	19.650												17.41	18.80
1.406	32	5.614	45	7.895	8.88	11.38	12.76	14.15	16.91	20.22	21.05	23.81	26.57	27.95	30.71	33.47	34.84
1.412	34	5.965	48	8.421	8.17	10.68	12.06	13.45	16.21	19.53	20.36	23.12	25.88	27.26	30.02	32.77	34.15
1.415	53	9.299	75	13.158						13.08	13.92	16.70	19.47	20.86	23.62	26.39	27.77
1.420	50	8.772	71	12.457						14.07	14.91	17.68	20.45	21.83	24.60	27.36	28.74
1.429	28	4.912	40	7.018	10.14	12.63	14.02	15.40	18.16	21.47	22.30	25.06	27.82	29.20	31.95	34.71	36.08
1.429	35	6.141	50	8.772		10.25	11.64	13.03	15.79	19.11	19.94	22.70	25.46	26.84	29.60	32.36	33.73
1.429	56	9.825	80	14.036							12.78	15.57	18.34	19.73	22.50	25.27	26.65
1.429	63	11.053	90	15.790									15.95	17.34	20.12	22.89	24.27
1.432	37	6.492	53	9.299		9.54	10.93	12.32	15.09	18.41	19.24	22.00	24.76	26.15	28.90	31.66	33.04
1.433	30	5.263	43	7.544	9.44	11.93	13.32	14.70	17.46	20.78	21.61	24.36	27.12	28.50	31.26	34.02	35.39
1.436	39	6.842	56	9.825			10.23	11.62	14.39	17.71	18.54	21.31	24.07	25.45	28.21	30.97	32.35
1.452	31	5.439	45	7.895	9.01	11.51	12.89	14.28	17.04	20.36	21.19	23.95	26.70	28.09	30.84	33.60	34.98
1.455	33	5.790	48	8.421	8.30	10.80	12.19	13.58	16.35	19.66	20.49	23.25	26.01	27.39	30.15	32.91	34.28
1.465	43	7.544	63	11.053				10.05	12.83	16.16	17.00	19.77	22.53	23.91	26.68	29.44	30.81
1.471	34	5.965	50	8.772		10.38	11.77	13.16	15.92	19.24	20.07	22.83	25.59	26.97	29.73	32.49	33.87
1.472	36	6.316	53	9.299		9.67	11.06	12.45	15.22	18.54	19.37	22.14	24.90	26.28	29.04	31.80	33.17
1.474	38	6.667	56	9.825		8.95	10.35	11.75	14.52	17.84	18.68	21.44	24.20	25.58	28.34	31.10	32.48
1.479	48	8.421	71	12.457						14.33	15.16	17.94	20.71	22.10	24.86	27.62	29.00
1.483	29	5.088	43	7.544	9.56	12.06	13.45	14.83	17.60	20.91	21.74	24.50	27.26	28.64	31.39	34.15	35.53
1.489	45	7.895	67	11.755					11.97	15.31	16.15	18.92	21.69	23.07	25.83	28.60	29.97
1.493	75	13.158	112	19.650												18.03	19.43
1.500	30	5.263	45	7.895	9.14	11.64	13.02	14.41	17.18	20.49	21.32	24.08	26.84	28.22	30.98	33.74	35.11
1.500	32	5.614	48	8.421	8.42	10.93	12.32	13.71	16.48	19.79	20.62	23.38	26.14	27.53	30.28	33.04	34.42
1.500	40	7.018	60	10.527			9.48	10.88	13.67	16.99	17.83	20.60	23.36	24.74	27.50	30.26	31.64
1.500	50	8.772	75	13.158						13.46	14.30	17.09	19.86	21.25	24.02	26.78	28.16
1.500	60	10.527	90	15.790								13.52	16.32	17.72	20.50	23.28	24.66
				Length Factor*	**0.68**	**0.73**	**0.75**	**0.77**	**0.81**	**0.85**	**0.86**	**0.89**	**0.92**	**0.94**	**0.96**	**0.99**	**1.00**

* The length correction factor must be used to determine the proper belt width.

Selection program available online at ptwizard.com and passport.baldor.com

HT500 selection table – 14mm pitch HT500 belts (continued)

Speed ratio	Sprocket combinations				Center distance, inches													
	Driver		Driven															
	No. of teeth	Pitch dia. inches	No. of teeth	Pitch dia. inches	2380-14MX	2450-14MX	2520-14MX	2590-14MX	2660-14MX	2800-14MX	3136-14MX	3304-14MX	3360-14MX	3500-14MX	3850-14MX	3920-14MX	4326-14MX	4410-14MX
Length factor*					**1.01**	**1.02**	**1.03**	**1.04**	**1.05**	**1.07**	**1.12**	**1.14**	**1.14**	**1.16**	**1.19**	**1.20**	**1.24**	**1.25**
1.264	53	9.299	67	11.755	30.29	31.67	33.05	34.43	35.80	38.56	45.18	48.49	49.59	52.34	59.24	60.62	68.61	70.26
1.265	34	5.965	43	7.544	36.23	37.61	38.99	40.37	41.74	44.50	51.11	54.42	55.52	58.28	65.17	66.55	74.54	76.20
1.267	30	5.263	38	6.667	37.47	38.85	40.23	41.61	42.98	45.74	52.36	55.67	56.77	59.52	66.41	67.79	75.78	77.44
1.268	56	9.825	71	12.457	29.32	30.70	32.08	33.46	34.83	37.60	44.21	47.52	48.62	51.38	58.27	59.65	67.64	69.30
1.268	71	12.457	90	15.790	24.61	25.99	27.37	28.75	30.13	32.89	39.51	42.82	43.92	46.68	53.57	54.95	62.95	64.60
1.270	63	11.053	80	14.036	27.10	28.49	29.86	31.24	32.62	35.38	42.00	45.31	46.41	49.17	56.06	57.44	65.43	67.09
1.276	29	5.088	37	6.492	37.75	39.13	40.50	41.88	43.26	46.02	52.63	55.94	57.04	59.80	66.69	68.07	76.06	77.71
1.282	39	6.842	50	8.772	34.57	35.95	37.33	38.71	40.09	42.85	49.46	52.77	53.87	56.62	63.51	64.89	72.89	74.54
1.286	28	4.912	36	6.316	38.03	39.41	40.78	42.16	43.54	46.30	52.91	56.22	57.32	60.07	66.96	68.34	76.33	77.99
1.286	35	6.141	45	7.895	35.82	37.20	38.57	39.95	41.33	44.09	50.70	54.01	55.11	57.86	64.76	66.14	74.13	75.78
1.290	31	5.439	40	7.018	37.06	38.44	39.81	41.19	42.57	45.33	51.94	55.25	56.35	59.11	66.00	67.38	75.37	77.02
1.297	37	6.492	48	8.421	35.12	36.50	37.88	39.26	40.64	43.40	50.01	53.32	54.42	57.17	64.07	65.45	73.44	75.09
1.300	30	5.263	39	6.842	37.33	38.71	40.09	41.47	42.85	45.61	52.22	55.53	56.63	59.38	66.27	67.65	75.64	77.30
1.302	43	7.544	56	9.825	33.19	34.57	35.95	37.33	38.70	41.46	48.07	51.39	52.49	55.24	62.13	63.51	71.50	73.16
1.303	33	5.790	43	7.544	36.37	37.75	39.12	40.50	41.88	44.64	51.25	54.56	55.66	58.42	65.31	66.69	74.68	76.33
1.310	29	5.088	38	6.667	37.61	38.99	40.36	41.75	43.12	45.88	52.49	55.80	56.90	59.66	66.55	67.93	75.92	77.57
1.313	48	8.421	63	11.053	31.53	32.91	34.28	35.67	37.04	39.80	46.42	49.73	50.83	53.58	60.48	61.86	69.85	71.50
1.316	38	6.667	50	8.772	34.71	36.09	37.46	38.84	40.22	42.98	49.59	52.90	54.00	56.76	63.65	65.03	73.02	74.68
1.321	28	4.912	37	6.492	37.89	39.27	40.64	42.02	43.40	46.16	52.77	56.08	57.18	59.93	66.82	68.20	76.19	77.85
1.324	34	5.965	45	7.895	35.95	37.33	38.71	40.09	41.46	44.22	50.84	54.15	55.25	58.00	64.89	66.27	74.26	75.92
1.325	40	7.018	53	9.299	34.02	35.40	36.77	38.15	39.53	42.29	48.90	52.21	53.31	56.07	62.96	64.34	72.33	73.99
1.333	30	5.263	40	7.018	37.19	38.57	39.95	41.33	42.71	45.47	52.08	55.39	56.49	59.24	66.13	67.51	75.50	77.16
1.333	36	6.316	48	8.421	35.26	36.64	38.02	39.40	40.77	43.53	50.14	53.46	54.56	57.31	64.20	65.58	73.57	75.23
1.333	45	7.895	60	10.527	32.35	33.74	35.11	36.49	37.87	40.63	47.24	50.55	51.65	54.41	61.30	62.68	70.67	72.33
1.333	60	10.527	80	14.036	27.50	28.88	30.26	31.64	33.02	35.79	42.40	45.71	46.82	49.57	56.47	57.85	65.84	67.50
1.339	56	9.825	75	13.158	28.75	30.13	31.51	32.89	34.27	37.03	43.65	46.96	48.06	50.82	57.71	59.09	67.08	68.74
1.340	50	8.772	67	11.755	30.69	32.07	33.45	34.83	36.21	38.97	45.58	48.90	50.00	52.75	59.64	61.02	69.02	70.67
1.340	53	9.299	71	12.457	29.72	31.10	32.48	33.86	35.24	38.00	44.61	47.93	49.03	51.78	58.68	60.06	68.05	69.70
1.343	67	11.755	90	15.790	25.14	26.52	27.90	29.28	30.66	33.43	40.05	43.36	44.46	47.22	54.11	55.49	63.49	65.14
1.344	32	5.614	43	7.544	36.50	37.88	39.26	40.64	42.01	44.78	51.39	54.70	55.80	58.55	65.44	66.82	74.81	76.47
1.345	29	5.088	39	6.842	37.47	38.85	40.23	41.61	42.98	45.74	52.35	55.66	56.76	59.52	66.41	67.79	75.78	77.44
1.351	37	6.492	50	8.772	34.84	36.22	37.60	38.98	40.36	43.12	49.73	53.04	54.14	56.90	63.79	65.17	73.16	74.81
1.357	28	4.912	38	6.667	37.75	39.13	40.50	41.88	43.26	46.02	52.63	55.94	57.04	59.79	66.69	68.07	76.06	77.71
1.359	39	6.842	53	9.299	34.15	35.53	36.91	38.29	39.66	42.43	49.04	52.35	53.45	56.20	63.10	64.48	72.47	74.12
1.364	33	5.790	45	7.895	36.09	37.47	38.84	40.22	41.60	44.36	50.97	54.28	55.38	58.14	65.03	66.41	74.40	76.05
1.371	35	6.141	48	8.421	35.39	36.78	38.15	39.53	40.91	43.67	50.28	53.59	54.69	57.45	64.34	65.72	73.71	75.36
1.379	29	5.088	40	7.018	37.33	38.71	40.09	41.47	42.84	45.60	52.21	55.52	56.62	59.38	66.27	67.65	75.64	77.30
1.387	31	5.439	43	7.544	36.64	38.02	39.39	40.77	42.15	44.91	51.52	54.83	55.93	58.69	65.58	66.96	74.95	76.61
1.389	36	6.316	50	8.772	34.98	36.36	37.73	39.12	40.49	43.25	49.86	53.18	54.28	57.03	63.92	65.30	73.29	74.95
1.393	28	4.912	39	6.842	37.61	38.99	40.36	41.74	43.12	45.88	52.49	55.80	56.90	59.66	66.55	67.93	75.92	77.57
1.395	38	6.667	53	9.299	34.29	35.67	37.04	38.42	39.80	42.56	49.17	52.48	53.58	56.34	63.23	64.61	72.60	74.26
1.395	43	7.544	60	10.527	32.62	34.00	35.38	36.76	38.14	40.90	47.51	50.83	51.93	54.68	61.57	62.95	70.95	72.60
1.396	48	8.421	67	11.755	30.96	32.34	33.72	35.10	36.48	39.24	45.85	49.17	50.27	53.02	59.92	61.30	69.29	70.94
1.400	40	7.018	56	9.825	33.59	34.97	36.35	37.73	39.11	41.87	48.48	51.79	52.89	55.65	62.54	63.92	71.91	73.57
1.400	45	7.895	63	11.053	31.93	33.31	34.69	36.07	37.44	40.21	46.82	50.13	51.23	53.99	60.88	62.26	70.26	71.91
1.400	80	14.036	112	19.650	20.20	21.59	22.98	24.37	25.75	28.52	35.16	38.48	39.58	42.35	49.25	50.63	58.63	60.29
1.406	32	5.614	45	7.895	36.22	37.60	38.98	40.36	41.73	44.50	51.11	54.42	55.52	58.27	65.17	66.55	74.54	76.19
1.412	34	5.965	48	8.421	35.53	36.91	38.29	39.67	41.04	43.80	50.42	53.73	54.83	57.58	64.47	65.85	73.85	75.50
1.415	53	9.299	75	13.158	29.15	30.53	31.91	33.29	34.67	37.43	44.05	47.36	48.46	51.22	58.12	59.50	67.49	69.15
1.420	50	8.772	71	12.457	30.12	31.50	32.88	34.26	35.64	38.40	45.02	48.33	49.43	52.19	59.08	60.46	68.46	70.11
1.429	28	4.912	40	7.018	37.47	38.85	40.22	41.60	42.98	45.74	52.35	55.66	56.76	59.52	66.41	67.79	75.78	77.43
1.429	35	6.141	50	8.772	35.11	36.49	37.87	39.25	40.63	43.39	50.00	53.31	54.41	57.17	64.06	65.44	73.43	75.09
1.429	56	9.825	80	14.036	28.03	29.41	30.79	32.18	33.55	36.32	42.94	46.25	47.35	50.11	57.01	58.39	66.38	68.04
1.429	63	11.053	90	15.790	25.66	27.04	28.42	29.81	31.19	33.95	40.58	43.89	45.00	47.75	54.65	56.03	64.03	65.68
1.432	37	6.492	53	9.299	34.42	35.80	37.18	38.56	39.93	42.69	49.31	52.62	53.72	56.48	63.37	64.75	72.74	74.39
1.433	30	5.263	43	7.544	36.77	38.15	39.53	40.91	42.29	45.05	51.66	54.97	56.07	58.83	65.72	67.10	75.09	76.74
1.436	39	6.842	56	9.825	33.73	35.11	36.48	37.87	39.24	42.00	48.62	51.93	53.03	55.78	62.68	64.06	72.05	73.70
1.452	31	5.439	45	7.895	36.36	37.74	39.11	40.49	41.87	44.63	51.24	54.55	55.65	58.41	65.30	66.68	74.67	76.33
1.455	33	5.790	48	8.421	35.66	37.05	38.42	39.80	41.18	43.94	50.55	53.86	54.96	57.72	64.61	65.99	73.98	75.64
1.465	43	7.544	63	11.053	32.20	33.58	34.95	36.34	37.71	40.48	47.09	50.40	51.50	54.26	61.15	62.53	70.53	72.18
1.471	34	5.965	50	8.772	35.25	36.63	38.00	39.39	40.76	43.52	50.14	53.45	54.55	57.30	64.20	65.58	73.57	75.22
1.472	36	6.316	53	9.299	34.55	35.94	37.31	38.69	40.07	42.83	49.44	52.75	53.86	56.61	63.50	64.88	72.88	74.53
1.474	38	6.667	56	9.825	33.86	35.24	36.62	38.00	39.38	42.14	48.75	52.06	53.16	55.92	62.81	64.19	72.18	73.84
1.479	48	8.421	71	12.457	30.39	31.77	33.15	34.53	35.91	38.67	45.29	48.60	49.70	52.46	59.35	60.73	68.73	70.38
1.483	29	5.088	43	7.544	36.91	38.29	39.66	41.05	42.42	45.18	51.79	55.11	56.21	58.96	65.85	67.23	75.22	76.88
1.489	45	7.895	67	11.755	31.36	32.74	34.12	35.50	36.88	39.64	46.26	49.57	50.67	53.43	60.32	61.70	69.70	71.35
1.493	75	13.158	112	19.650	20.83	22.23	23.61	25.01	26.39	29.17	35.82	39.14	40.24	43.01	49.91	51.29	59.30	60.96
1.500	30	5.263	45	7.895	36.49	37.87	39.25	40.63	42.01	44.77	51.38	54.69	55.79	58.55	65.44	66.82	74.81	76.46
1.500	32	5.614	48	8.421	35.80	37.18	38.56	39.94	41.31	44.07	50.69	54.00	55.10	57.85	64.75	66.13	74.12	75.77
1.500	40	7.018	60	10.527	33.02	34.41	35.78	37.16	38.54	41.30	47.92	51.23	52.33	55.09	61.98	63.36	71.35	73.01
1.500	50	8.772	75	13.158	29.54	30.93	32.31	33.69	35.07	37.83	44.45	47.77	48.87	51.62	58.52	59.90	67.90	69.55
1.500	60	10.527	90	15.790	26.05	27.43	28.82	30.20	31.58	34.35	40.98	44.29	45.39	48.15	55.05	56.43	64.43	66.09
Length Factor*					**1.01**	**1.02**	**1.03**	**1.04**	**1.05**	**1.07**	**1.12**	**1.14**	**1.14**	**1.16**	**1.19**	**1.20**	**1.24**	**1.25**

* The length correction factor must be used to determine the proper belt width.

Selection program available online at ptwizard.com and passport.baldor.com

HT500 selection table – 14mm pitch HT500 belts

Speed ratio	Sprocket combinations				Center distance, inches												
	Driver		Driven														
	No. of teeth	Pitch dia. inches	No. of teeth	Pitch dia. inches	994-14MX	1120-14MX	1190-14MX	1260-14MX	1400-14MX	1568-14MX	1610-14MX	1750-14MX	1890-14MX	1960-14MX	2100-14MX	2240-14MX	2310-14MX
Length factor*					**0.68**	**0.73**	**0.75**	**0.77**	**0.81**	**0.85**	**0.86**	**0.89**	**0.92**	**0.94**	**0.96**	**0.99**	**1.00**
1.509	53	9.299	80	14.036							13.15	15.95	18.73	20.12	22.89	25.66	27.04
1.514	35	6.141	53	9.299		9.79	11.19	12.58	15.35	18.67	19.50	22.27	25.03	26.41	29.17	31.93	33.31
1.514	37	6.492	56	9.825		9.08	10.48	11.87	14.65	17.97	18.81	21.57	24.33	25.72	28.48	31.24	32.61
1.515	33	5.790	50	8.772	7.99	10.50	11.89	13.28	16.05	19.37	20.20	22.96	25.72	27.11	29.87	32.62	34.00
1.536	28	4.912	43	7.544	9.69	12.19	13.58	14.96	17.73	21.04	21.87	24.63	27.39	28.77	31.53	34.29	35.66
1.538	39	6.842	60	10.527			9.61	11.01	13.80	17.12	17.96	20.73	23.49	24.88	27.64	30.40	31.78
1.548	31	5.439	48	8.421	8.55	11.06	12.45	13.84	16.61	19.92	20.76	23.52	26.28	27.66	30.42	33.18	34.55
1.552	29	5.088	45	7.895	9.26	11.76	13.15	14.54	17.31	20.62	21.45	24.21	26.97	28.35	31.11	33.87	35.25
1.556	36	6.316	56	9.825		9.20	10.60	12.00	14.78	18.10	18.94	21.70	24.46	25.85	28.61	31.37	32.75
1.558	43	7.544	67	11.755					12.22	15.56	16.40	19.18	21.95	23.33	26.10	28.86	30.24
1.559	34	5.965	53	9.299		9.92	11.31	12.71	15.48	18.80	19.64	22.40	25.16	26.54	29.30	32.06	33.44
1.563	32	5.614	50	8.772	8.11	10.63	12.02	13.41	16.18	19.50	20.33	23.10	25.86	27.24	30.00	32.76	34.13
1.563	48	8.421	75	13.158						13.71	14.55	17.34	20.12	21.51	24.28	27.04	28.42
1.575	40	7.018	63	11.053				10.42	13.21	16.55	17.38	20.16	22.92	24.31	27.07	29.83	31.21
1.577	71	12.457	112	19.650												18.53	19.93
1.578	45	7.895	71	12.457					11.35	14.70	15.54	18.32	21.10	22.48	25.25	28.02	29.40
1.579	38	6.667	60	10.527			9.73	11.13	13.92	17.25	18.09	20.86	23.62	25.01	27.77	30.53	31.91
1.600	30	5.263	48	8.421	8.67	11.19	12.58	13.97	16.74	20.06	20.89	23.65	26.41	27.79	30.55	33.31	34.69
1.600	35	6.141	56	9.825		9.32	10.73	12.13	14.91	18.23	19.07	21.83	24.60	25.98	28.74	31.50	32.88
1.600	50	8.772	80	14.036						12.68	13.52	16.32	19.11	20.50	23.28	26.05	27.43
1.606	33	5.790	53	9.299		10.04	11.44	12.83	15.61	18.93	19.77	22.53	25.29	26.68	29.44	32.20	33.57
1.607	28	4.912	45	7.895	9.39	11.89	13.28	14.67	17.44	20.75	21.58	24.35	27.11	28.49	31.25	34.00	35.38
1.607	56	9.825	90	15.790								14.01	16.82	18.22	21.01	23.79	25.18
1.613	31	5.439	50	8.772	8.23	10.75	12.15	13.54	16.31	19.63	20.47	23.23	25.99	27.37	30.13	32.89	34.27
1.615	39	6.842	63	11.053				10.54	13.34	16.68	17.51	20.29	23.05	24.44	27.20	29.97	31.34
1.622	37	6.492	60	10.527			9.85	11.26	14.05	17.38	18.22	20.99	23.75	25.14	27.90	30.66	32.04
1.647	34	5.965	56	9.825		9.45	10.85	12.25	15.03	18.36	19.20	21.96	24.73	26.11	28.87	31.63	33.01
1.651	43	7.544	71	12.457					11.59	14.95	15.79	18.58	21.35	22.74	25.51	28.28	29.66
1.655	29	5.088	48	8.421	8.80	11.31	12.71	14.10	16.87	20.19	21.02	23.78	26.54	27.93	30.68	33.44	34.82
1.656	32	5.614	53	9.299		10.16	11.57	12.96	15.74	19.06	19.90	22.66	25.43	26.81	29.57	32.33	33.71
1.658	38	6.667	63	11.053				10.66	13.46	16.80	17.64	20.41	23.18	24.57	27.33	30.10	31.48
1.667	30	5.263	50	8.772	8.36	10.88	12.28	13.67	16.44	19.76	20.60	23.36	26.12	27.51	30.27	33.03	34.40
1.667	36	6.316	60	10.527			9.97	11.38	14.17	17.51	18.35	21.12	23.88	25.27	28.03	30.79	32.17
1.667	45	7.895	75	13.158						14.08	14.93	17.72	20.50	21.89	24.66	27.43	28.81
1.667	48	8.421	80	14.036						12.92	13.77	16.57	19.36	20.76	23.53	26.31	27.69
1.672	67	11.755	112	19.650											16.19	19.02	20.42
1.675	40	7.018	67	11.755					12.59	15.94	16.78	19.56	22.34	23.72	26.49	29.25	30.63
1.697	33	5.790	56	9.825		9.57	10.98	12.38	15.16	18.49	19.33	22.09	24.86	26.24	29.01	31.77	33.14
1.698	53	9.299	90	15.790								14.38	17.19	18.60	21.39	24.17	25.56
1.703	37	6.492	63	11.053				10.78	13.59	16.93	17.77	20.54	23.31	24.70	27.47	30.23	31.61
1.710	31	5.439	53	9.299		10.29	11.69	13.09	15.87	19.19	20.03	22.79	25.56	26.94	29.70	32.46	33.84
1.714	28	4.912	48	8.421	8.92	11.44	12.83	14.22	17.00	20.32	21.15	23.91	26.68	28.06	30.82	33.58	34.95
1.714	35	6.141	60	10.527			10.09	11.50	14.30	17.64	18.47	21.25	24.01	25.40	28.16	30.93	32.30
1.718	39	6.842	67	11.755					12.72	16.07	16.91	19.69	22.46	23.85	26.62	29.39	30.77
1.724	29	5.088	50	8.772	8.48	11.00	12.40	13.80	16.57	19.89	20.73	23.49	26.25	27.64	30.40	33.16	34.54
1.744	43	7.544	75	13.158						14.33	15.18	17.97	20.76	22.15	24.92	27.69	29.08
1.750	32	5.614	56	9.825		9.69	11.10	12.50	15.29	18.62	19.46	22.22	24.99	26.38	29.14	31.90	33.28
1.750	36	6.316	63	11.053			9.49	10.91	13.71	17.06	17.90	20.67	23.44	24.83	27.60	30.36	31.74
1.750	80	14.036	140	24.562													
1.763	38	6.667	67	11.755				10.01	12.84	16.20	17.04	19.82	22.59	23.98	26.75	29.52	30.90
1.765	34	5.965	60	10.527			10.22	11.63	14.43	17.77	18.60	21.38	24.14	25.53	28.30	31.06	32.44
1.767	30	5.263	53	9.299		10.41	11.82	13.21	16.00	19.32	20.16	22.92	25.69	27.07	29.83	32.60	33.97
1.775	40	7.018	71	12.457					11.95	15.33	16.17	18.96	21.74	23.13	25.90	28.67	30.05
1.778	45	7.895	80	14.036						13.28	14.14	16.95	19.74	21.14	23.92	26.69	28.08
1.778	63	11.053	112	19.650											16.67	19.51	20.91
1.786	28	4.912	50	8.772	8.60	11.13	12.53	13.92	16.70	20.02	20.86	23.62	26.39	27.77	30.53	33.29	34.67
1.800	35	6.141	63	11.053			9.61	11.03	13.84	17.19	18.02	20.80	23.57	24.96	27.73	30.49	31.87
1.800	50	8.772	90	15.790								14.74	17.56	18.97	21.77	24.55	25.94
1.806	31	5.439	56	9.825		9.81	11.22	12.63	15.42	18.75	19.58	22.35	25.12	26.51	29.27	32.03	33.41
1.811	37	6.492	67	11.755				10.13	12.96	16.32	17.16	19.94	22.72	24.11	26.88	29.65	31.03
1.818	33	5.790	60	10.527		8.91	10.34	11.75	14.55	17.89	18.73	21.50	24.27	25.66	28.43	31.19	32.57
1.821	39	6.842	71	12.457					12.07	15.45	16.30	19.09	21.87	23.26	26.03	28.80	30.18
1.828	29	5.088	53	9.299	7.99	10.53	11.94	13.34	16.12	19.45	20.29	23.05	25.82	27.20	29.97	32.73	34.11
1.853	34	5.965	63	11.053			9.72	11.15	13.96	17.31	18.15	20.93	23.70	25.09	27.86	30.62	32.00
1.860	43	7.544	80	14.036						13.52	14.38	17.19	19.99	21.39	24.17	26.95	28.33
1.861	36	6.316	67	11.755				10.25	13.08	16.45	17.29	20.07	22.85	24.24	27.01	29.78	31.16
1.867	30	5.263	56	9.825		9.93	11.34	12.75	15.54	18.88	19.71	22.48	25.25	26.64	29.40	32.16	33.54
1.867	60	10.527	112	19.650											17.02	19.87	21.28
1.867	75	13.158	140	24.562													
1.868	38	6.667	71	12.457					12.19	15.58	16.42	19.21	21.99	23.39	26.16	28.93	30.31
Length Factor*					**0.68**	**0.73**	**0.75**	**0.77**	**0.81**	**0.85**	**0.86**	**0.89**	**0.92**	**0.94**	**0.96**	**0.99**	**1.00**

* The length correction factor must be used to determine the proper belt width.

Selection program available online at ptwizard.com and passport.baldor.com

HT500 selection table – 14mm pitch HT500 belts (continued)

Speed ratio	Sprocket combinations				Center distance, inches													
	Driver		Driven															
	No. of teeth	Pitch dia. inches	No. of teeth	Pitch dia. inches	2380-14MX	2450-14MX	2520-14MX	2590-14MX	2660-14MX	2800-14MX	3136-14MX	3304-14MX	3360-14MX	3500-14MX	3850-14MX	3920-14MX	4326-14MX	4410-14MX
Length factor*					**1.01**	**1.02**	**1.03**	**1.04**	**1.05**	**1.07**	**1.12**	**1.14**	**1.14**	**1.16**	**1.19**	**1.20**	**1.24**	**1.25**
1.509	53	9.299	80	14.036	28.42	29.81	31.19	32.57	33.95	36.72	43.34	46.65	47.75	50.51	57.41	58.79	66.79	68.44
1.514	35	6.141	53	9.299	34.69	36.07	37.45	38.83	40.20	42.96	49.58	52.89	53.99	56.75	63.64	65.02	73.01	74.67
1.514	37	6.492	56	9.825	33.99	35.38	36.75	38.13	39.51	42.27	48.89	52.20	53.30	56.05	62.95	64.33	72.32	73.98
1.515	33	5.790	50	8.772	35.38	36.76	38.14	39.52	40.90	43.66	50.27	53.58	54.68	57.44	64.33	65.71	73.70	75.36
1.536	28	4.912	43	7.544	37.04	38.42	39.80	41.18	42.56	45.32	51.93	55.24	56.34	59.10	65.99	67.37	75.36	77.02
1.538	39	6.842	60	10.527	33.16	34.54	35.92	37.30	38.67	41.44	48.05	51.37	52.47	55.22	62.12	63.50	71.49	73.15
1.548	31	5.439	48	8.421	35.93	37.31	38.69	40.07	41.45	44.21	50.82	54.13	55.23	57.99	64.88	66.26	74.25	75.91
1.552	29	5.088	45	7.895	36.63	38.01	39.38	40.76	42.14	44.90	51.51	54.83	55.93	58.68	65.57	66.95	74.95	76.60
1.556	36	6.316	56	9.825	34.13	35.51	36.89	38.27	39.64	42.41	49.02	52.33	53.43	56.19	63.08	64.46	72.46	74.11
1.558	43	7.544	67	11.755	31.62	33.01	34.38	35.77	37.14	39.91	46.52	49.84	50.94	53.70	60.59	61.97	69.97	71.62
1.559	34	5.965	53	9.299	34.82	36.20	37.58	38.96	40.34	43.10	49.71	53.03	54.13	56.88	63.77	65.16	73.15	74.80
1.563	32	5.614	50	8.772	35.52	36.90	38.27	39.65	41.03	43.79	50.41	53.72	54.82	57.57	64.47	65.85	73.84	75.49
1.563	48	8.421	75	13.158	29.81	31.19	32.57	33.95	35.33	38.10	44.72	48.03	49.13	51.89	58.79	60.17	68.17	69.82
1.575	40	7.018	63	11.053	32.59	33.98	35.35	36.74	38.11	40.88	47.49	50.81	51.91	54.66	61.56	62.94	70.93	72.59
1.577	71	12.457	112	19.650	21.33	22.73	24.12	25.51	26.90	29.69	36.34	39.66	40.76	43.53	50.44	51.82	59.83	61.49
1.578	45	7.895	71	12.457	30.78	32.16	33.54	34.93	36.30	39.07	45.69	49.00	50.10	52.86	59.76	61.14	69.13	70.79
1.579	38	6.667	60	10.527	33.29	34.67	36.05	37.43	38.81	41.57	48.19	51.50	52.60	55.36	62.25	63.63	71.62	73.28
1.600	30	5.263	48	8.421	36.07	37.45	38.83	40.21	41.58	44.34	50.96	54.27	55.37	58.13	65.02	66.40	74.39	76.05
1.600	35	6.141	56	9.825	34.26	35.64	37.02	38.40	39.78	42.54	49.16	52.47	53.57	56.33	63.22	64.60	72.59	74.25
1.600	50	8.772	80	14.036	28.82	30.20	31.58	32.97	34.35	37.11	43.74	47.05	48.15	50.91	57.81	59.19	67.19	68.85
1.606	33	5.790	53	9.299	34.96	36.34	37.71	39.09	40.47	43.23	49.85	53.16	54.26	57.02	63.91	65.29	73.28	74.94
1.607	28	4.912	45	7.895	36.76	38.14	39.52	40.90	42.28	45.04	51.65	54.96	56.06	58.82	65.71	67.09	75.08	76.74
1.607	56	9.825	90	15.790	26.56	27.95	29.34	30.72	32.10	34.87	41.50	44.82	45.93	48.69	55.59	56.97	64.97	66.63
1.613	31	5.439	50	8.772	35.65	37.03	38.41	39.79	41.16	43.93	50.54	53.85	54.95	57.71	64.60	65.98	73.97	75.63
1.615	39	6.842	63	11.053	32.73	34.11	35.49	36.87	38.25	41.01	47.63	50.94	52.04	54.80	61.69	63.08	71.07	72.72
1.622	37	6.492	60	10.527	33.42	34.80	36.18	37.56	38.94	41.70	48.32	51.63	52.73	55.49	62.39	63.77	71.76	73.42
1.647	34	5.965	56	9.825	34.39	35.78	37.15	38.54	39.91	42.67	49.29	52.60	53.70	56.46	63.35	64.73	72.73	74.38
1.651	43	7.544	71	12.457	31.04	32.43	33.81	35.19	36.57	39.33	45.96	49.27	50.37	53.13	60.03	61.41	69.40	71.06
1.655	29	5.088	48	8.421	36.20	37.58	38.96	40.34	41.72	44.48	51.09	54.40	55.51	58.26	65.15	66.53	74.53	76.18
1.656	32	5.614	53	9.299	35.09	36.47	37.85	39.23	40.61	43.37	49.98	53.30	54.40	57.15	64.05	65.43	73.42	75.07
1.658	38	6.667	63	11.053	32.86	34.24	35.62	37.00	38.38	41.14	47.76	51.08	52.18	54.93	61.83	63.21	71.20	72.86
1.667	30	5.263	50	8.772	35.78	37.17	38.54	39.92	41.30	44.06	50.68	53.99	55.09	57.85	64.74	66.12	74.11	75.77
1.667	36	6.316	60	10.527	33.56	34.94	36.32	37.70	39.07	41.84	48.46	51.77	52.87	55.63	62.52	63.90	71.90	73.55
1.667	45	7.895	75	13.158	30.20	31.59	32.96	34.35	35.73	38.50	45.12	48.43	49.54	52.29	59.19	60.57	68.57	70.23
1.667	48	8.421	80	14.036	29.08	30.46	31.84	33.23	34.61	37.38	44.00	47.32	48.42	51.18	58.08	59.46	67.46	69.12
1.672	67	11.755	112	19.650	21.83	23.23	24.62	26.02	27.41	30.20	36.85	40.18	41.29	44.05	50.97	52.35	60.36	62.02
1.675	40	7.018	67	11.755	32.02	33.40	34.78	36.16	37.54	40.31	46.93	50.24	51.34	54.10	60.99	62.38	70.37	72.03
1.697	33	5.790	56	9.825	34.53	35.91	37.29	38.67	40.05	42.81	49.42	52.74	53.84	56.60	63.49	64.87	72.86	74.52
1.698	53	9.299	90	15.790	26.95	28.34	29.72	31.11	32.49	35.27	41.90	45.22	46.32	49.08	55.99	57.37	65.37	67.03
1.703	37	6.492	63	11.053	32.99	34.37	35.75	37.14	38.51	41.28	47.90	51.21	52.31	55.07	61.96	63.34	71.34	72.99
1.710	31	5.439	53	9.299	35.22	36.60	37.98	39.36	40.74	43.50	50.12	53.43	54.53	57.29	64.18	65.56	73.55	75.21
1.714	28	4.912	48	8.421	36.34	37.72	39.09	40.48	41.85	44.61	51.23	54.54	55.64	58.40	65.29	66.67	74.66	76.32
1.714	35	6.141	60	10.527	33.69	35.07	36.45	37.83	39.21	41.97	48.59	51.90	53.00	55.76	62.66	64.04	72.03	73.69
1.718	39	6.842	67	11.755	32.15	33.53	34.91	36.30	37.67	40.44	47.06	50.37	51.48	54.23	61.13	62.51	70.51	72.16
1.724	29	5.088	50	8.772	35.92	37.30	38.68	40.06	41.43	44.20	50.81	54.12	55.22	57.98	64.87	66.25	74.25	75.90
1.744	43	7.544	75	13.158	30.46	31.85	33.23	34.61	35.99	38.76	45.38	48.70	49.80	52.56	59.46	60.84	68.84	70.49
1.750	32	5.614	56	9.825	34.66	36.04	37.42	38.80	40.18	42.94	49.56	52.87	53.97	56.73	63.62	65.01	73.00	74.65
1.750	36	6.316	63	11.053	33.12	34.51	35.89	37.27	38.65	41.41	48.03	51.34	52.44	55.20	62.10	63.48	71.47	73.13
1.750	80	14.036	140	24.562				19.97	21.39	24.23	30.97	34.32	35.43	38.22	45.16	46.55	54.59	56.25
1.763	38	6.667	67	11.755	32.28	33.67	35.04	36.43	37.81	40.57	47.19	50.51	51.61	54.37	61.26	62.64	70.64	72.30
1.765	34	5.965	60	10.527	33.82	35.20	36.58	37.96	39.34	42.11	48.72	52.04	53.14	55.90	62.79	64.17	72.17	73.82
1.767	30	5.263	53	9.299	35.36	36.74	38.11	39.50	40.87	43.64	50.25	53.57	54.67	57.42	64.32	65.70	73.69	75.35
1.775	40	7.018	71	12.457	31.44	32.82	34.20	35.59	36.96	39.73	46.35	49.67	50.77	53.53	60.43	61.81	69.81	71.46
1.778	45	7.895	80	14.036	29.47	30.85	32.23	33.62	35.00	37.77	44.40	47.72	48.82	51.58	58.48	59.86	67.86	69.52
1.778	63	11.053	112	19.650	22.32	23.73	25.12	26.52	27.91	30.70	37.37	40.70	41.80	44.57	51.49	52.88	60.89	62.55
1.786	28	4.912	50	8.772	36.05	37.43	38.81	40.19	41.57	44.33	50.95	54.26	55.36	58.12	65.01	66.39	74.38	76.04
1.800	35	6.141	63	11.053	33.26	34.64	36.02	37.40	38.78	41.54	48.16	51.48	52.58	55.34	62.23	63.61	71.61	73.26
1.800	50	8.772	90	15.790	27.33	28.72	30.11	31.50	32.88	35.66	42.29	45.61	46.72	49.48	56.38	57.77	65.77	67.43
1.806	31	5.439	56	9.825	34.79	36.18	37.55	38.93	40.31	43.08	49.69	53.01	54.11	56.86	63.76	65.14	73.13	74.79
1.811	37	6.492	67	11.755	32.41	33.80	35.18	36.56	37.94	40.70	47.33	50.64	51.74	54.50	61.40	62.78	70.77	72.43
1.818	33	5.790	60	10.527	33.95	35.34	36.71	38.10	39.47	42.24	48.86	52.17	53.27	56.03	62.93	64.31	72.30	73.96
1.821	39	6.842	71	12.457	31.57	32.95	34.33	35.72	37.10	39.86	46.49	49.80	50.91	53.66	60.56	61.94	69.94	71.60
1.828	29	5.088	53	9.299	35.49	36.87	38.25	39.63	41.01	43.77	50.39	53.70	54.80	57.56	64.45	65.83	73.83	75.48
1.853	34	5.965	63	11.053	33.39	34.77	36.15	37.53	38.91	41.68	48.30	51.61	52.71	55.47	62.37	63.75	71.74	73.40
1.860	43	7.544	80	14.036	29.72	31.11	32.49	33.88	35.26	38.03	44.66	47.98	49.08	51.84	58.75	60.13	68.13	69.79
1.861	36	6.316	67	11.755	32.54	33.93	35.31	36.69	38.07	40.84	47.46	50.77	51.88	54.63	61.53	62.91	70.91	72.57
1.867	30	5.263	56	9.825	34.93	36.31	37.69	39.07	40.45	43.21	49.83	53.14	54.24	57.00	63.89	65.28	73.27	74.93
1.867	60	10.527	112	19.650	22.69	24.10	25.49	26.90	28.29	31.08	37.75	41.09	42.19	44.96	51.88	53.27	61.28	62.94
1.867	75	13.158	140	24.562				20.56	21.99	24.84	31.59	34.95	36.06	38.85	45.80	47.19	55.24	56.90
1.868	38	6.667	71	12.457	31.70	33.08	34.46	35.85	37.23	40.00	46.62	49.94	51.04	53.80	60.70	62.08	70.08	71.73
Length Factor*					**1.01**	**1.02**	**1.03**	**1.04**	**1.05**	**1.07**	**1.12**	**1.14**	**1.14**	**1.16**	**1.19**	**1.20**	**1.24**	**1.25**

* The length correction factor must be used to determine the proper belt width.

Selection program available online at ptwizard.com and passport.baldor.com

HT500 selection table – 14mm pitch HT500 belts

Speed ratio	Sprocket combinations				Center distance, inches												
	Driver		Driven														
	No. of teeth	Pitch dia. inches	No. of teeth	Pitch dia. inches	994-14MX	1120-14MX	1190-14MX	1260-14MX	1400-14MX	1568-14MX	1610-14MX	1750-14MX	1890-14MX	1960-14MX	2100-14MX	2240-14MX	2310-14MX
Length factor*					**0.68**	**0.73**	**0.75**	**0.77**	**0.81**	**0.85**	**0.86**	**0.89**	**0.92**	**0.94**	**0.96**	**0.99**	**1.00**
1.875	32	5.614	60	10.527		9.03	10.46	11.87	14.68	18.02	18.86	21.63	24.40	25.79	28.56	31.32	32.70
1.875	40	7.018	75	13.158					11.29	14.70	15.54	18.35	21.14	22.53	25.31	28.08	29.46
1.875	48	8.421	90	15.790								14.98	17.81	19.22	22.02	24.81	26.20
1.893	28	4.912	53	9.299	8.11	10.66	12.06	13.46	16.25	19.58	20.42	23.18	25.95	27.34	30.10	32.86	34.24
1.909	33	5.790	63	11.053			9.84	11.27	14.09	17.44	18.28	21.06	23.83	25.22	27.99	30.75	32.13
1.914	35	6.141	67	11.755				10.37	13.21	16.57	17.41	20.20	22.98	24.37	27.14	29.91	31.29
1.919	37	6.492	71	12.457					12.31	15.70	16.54	19.34	22.12	23.51	26.29	29.06	30.44
1.923	39	6.842	75	13.158					11.41	14.82	15.67	18.47	21.26	22.66	25.44	28.21	29.59
1.931	29	5.088	56	9.825		10.05	11.47	12.87	15.67	19.00	19.84	22.61	25.38	26.77	29.53	32.30	33.67
1.935	31	5.439	60	10.527		9.15	10.58	11.99	14.80	18.15	18.98	21.76	24.53	25.92	28.69	31.45	32.83
1.969	32	5.614	63	11.053			9.96	11.39	14.21	17.56	18.40	21.18	23.96	25.35	28.12	30.88	32.27
1.971	34	5.965	67	11.755				10.49	13.33	16.70	17.54	20.33	23.11	24.50	27.27	30.04	31.42
1.972	36	6.316	71	12.457					12.43	15.82	16.67	19.46	22.25	23.64	26.42	29.19	30.57
1.972	71	12.457	140	24.562													
1.974	38	6.667	75	13.158					11.53	14.94	15.79	18.60	21.39	22.78	25.56	28.34	29.72
2.000	28	4.912	56	9.825		10.17	11.59	13.00	15.79	19.13	19.97	22.74	25.51	26.90	29.66	32.43	33.81
2.000	30	5.263	60	10.527		9.27	10.70	12.12	14.93	18.27	19.11	21.89	24.66	26.05	28.82	31.58	32.96
2.000	40	7.018	80	14.036						13.88	14.74	17.56	20.37	21.77	24.55	27.33	28.72
2.000	45	7.895	90	15.790							12.46	15.34	18.17	19.58	22.39	25.18	26.57
2.000	56	9.825	112	19.650											17.50	20.35	21.76
2.027	37	6.492	75	13.158					11.65	15.06	15.91	18.72	21.51	22.91	25.69	28.47	29.85
2.029	35	6.141	71	12.457					12.55	15.94	16.79	19.59	22.37	23.77	26.55	29.32	30.70
2.030	33	5.790	67	11.755				10.60	13.45	16.82	17.66	20.45	23.23	24.62	27.40	30.17	31.55
2.032	31	5.439	63	11.053			10.08	11.51	14.33	17.69	18.53	21.31	24.09	25.48	28.25	31.02	32.40
2.051	39	6.842	80	14.036						14.00	14.86	17.69	20.49	21.89	24.68	27.46	28.85
2.069	29	5.088	60	10.527		9.38	10.82	12.24	15.05	18.40	19.24	22.02	24.79	26.18	28.95	31.71	33.09
2.083	36	6.316	75	13.158					11.76	15.18	16.03	18.84	21.64	23.04	25.82	28.60	29.98
2.088	34	5.965	71	12.457					12.67	16.07	16.91	19.71	22.50	23.90	26.67	29.45	30.83
2.090	67	11.755	140	24.562													
2.093	43	7.544	90	15.790							12.69	15.57	18.42	19.83	22.64	25.43	26.83
2.094	32	5.614	67	11.755				10.72	13.57	16.94	17.79	20.58	23.36	24.75	27.53	30.30	31.68
2.100	30	5.263	63	11.053			10.20	11.63	14.45	17.81	18.66	21.44	24.22	25.61	28.38	31.15	32.53
2.100	80	14.036	168	29.475													
2.105	38	6.667	80	14.036						14.12	14.98	17.81	20.61	22.02	24.81	27.59	28.98
2.113	53	9.299	112	19.650										14.94	17.85	20.71	22.13
2.143	28	4.912	60	10.527		9.50	10.94	12.36	15.17	18.53	19.37	22.15	24.92	26.31	29.08	31.85	33.23
2.143	35	6.141	75	13.158					11.88	15.30	16.16	18.97	21.76	23.16	25.95	28.72	30.11
2.152	33	5.790	71	12.457				9.91	12.79	16.19	17.04	19.84	22.63	24.02	26.80	29.58	30.96
2.161	31	5.439	67	11.755			9.38	10.84	13.69	17.07	17.91	20.70	23.49	24.88	27.66	30.43	31.81
2.162	37	6.492	80	14.036						14.24	15.10	17.93	20.74	22.14	24.93	27.72	29.10
2.172	29	5.088	63	11.053		8.86	10.31	11.75	14.58	17.94	18.78	21.57	24.34	25.73	28.51	31.28	32.66
2.206	34	5.965	75	13.158					12.00	15.42	16.28	19.09	21.89	23.29	26.07	28.85	30.24
2.219	32	5.614	71	12.457				10.02	12.91	16.31	17.16	19.96	22.75	24.15	26.93	29.70	31.09
2.222	36	6.316	80	14.036					10.88	14.36	15.22	18.05	20.86	22.27	25.06	27.84	29.23
2.222	63	11.053	140	24.562													
2.233	30	5.263	67	11.755			9.50	10.95	13.81	17.19	18.04	20.83	23.62	25.01	27.78	30.56	31.94
2.240	50	8.772	112	19.650										15.28	18.20	21.07	22.49
2.240	75	13.158	168	29.475													
2.250	28	4.912	63	11.053		8.98	10.43	11.87	14.70	18.06	18.91	21.69	24.47	25.86	28.64	31.41	32.79
2.250	40	7.018	90	15.790						12.15	13.04	15.93	18.78	20.19	23.01	25.81	27.20
2.250	80	14.036	180	31.580													
2.273	33	5.790	75	13.158					12.11	15.54	16.40	19.21	22.01	23.41	26.20	28.98	30.36
2.286	35	6.141	80	14.036					11.00	14.48	15.34	18.17	20.99	22.39	25.18	27.97	29.36
2.290	31	5.439	71	12.457				10.14	13.03	16.43	17.28	20.09	22.88	24.28	27.06	29.83	31.22
2.308	39	6.842	90	15.790						12.26	13.15	16.05	18.90	20.32	23.13	25.93	27.33
2.310	29	5.088	67	11.755			9.61	11.07	13.93	17.31	18.16	20.96	23.74	25.14	27.91	30.69	32.07
2.333	48	8.421	112	19.650										15.51	18.43	21.30	22.73
2.333	60	10.527	140	24.562													
2.344	32	5.614	75	13.158					12.23	15.67	16.52	19.34	22.14	23.54	26.33	29.11	30.49
2.353	34	5.965	80	14.036					11.11	14.59	15.46	18.29	21.11	22.51	25.31	28.10	29.48
2.366	71	12.457	168	29.475													
2.367	30	5.263	71	12.457				10.25	13.15	16.56	17.40	20.21	23.01	24.40	27.18	29.96	31.35
2.368	38	6.667	90	15.790						12.38	13.27	16.16	19.02	20.44	23.25	26.06	27.45
2.393	28	4.912	67	11.755			9.73	11.19	14.05	17.44	18.28	21.08	23.87	25.26	28.04	30.81	32.20
2.400	75	13.158	180	31.580													
2.419	31	5.439	75	13.158					12.35	15.78	16.64	19.46	22.26	23.66	26.45	29.23	30.62
2.424	33	5.790	80	14.036					11.22	14.71	15.57	18.42	21.23	22.64	25.43	28.22	29.61
2.432	37	6.492	90	15.790						12.49	13.38	16.28	19.14	20.56	23.38	26.18	27.58
2.448	29	5.088	71	12.457				10.36	13.27	16.68	17.53	20.34	23.13	24.53	27.31	30.09	31.47
2.489	45	7.895	112	19.650									14.35	15.85	18.78	21.66	23.08
2.500	30	5.263	75	13.158					12.46	15.90	16.76	19.58	22.39	23.79	26.58	29.36	30.75
2.500	32	5.614	80	14.036					11.34	14.83	15.69	18.54	21.36	22.76	25.56	28.35	29.74
2.500	36	6.316	90	15.790						12.60	13.49	16.40	19.26	20.68	23.50	26.31	27.70
2.500	56	9.825	140	24.562													
2.500	80	14.036	200	35.089													
Length Factor*					**0.68**	**0.73**	**0.75**	**0.77**	**0.81**	**0.85**	**0.86**	**0.89**	**0.92**	**0.94**	**0.96**	**0.99**	**1.00**

* The length correction factor must be used to determine the proper belt width.

Selection program available online at ptwizard.com and passport.baldor.com

HT500 selection table – 14mm pitch HT500 belts (continued)

Speed ratio	Sprocket combinations: Driver No. of teeth	Driver Pitch dia. inches	Driven No. of teeth	Driven Pitch dia. inches	Center distance, inches: 2380-14MX	2450-14MX	2520-14MX	2590-14MX	2660-14MX	2800-14MX	3136-14MX	3304-14MX	3360-14MX	3500-14MX	3850-14MX	3920-14MX	4326-14MX	4410-14MX
Length factor*					**1.01**	**1.02**	**1.03**	**1.04**	**1.05**	**1.07**	**1.12**	**1.14**	**1.14**	**1.16**	**1.19**	**1.20**	**1.24**	**1.25**
1.875	32	5.614	60	10.527	34.08	35.47	36.85	38.23	39.61	42.37	48.99	52.31	53.41	56.16	63.06	64.44	72.44	74.09
1.875	40	7.018	75	13.158	30.85	32.24	33.62	35.00	36.38	39.15	45.78	49.10	50.20	52.96	59.86	61.24	69.24	70.90
1.875	48	8.421	90	15.790	27.59	28.98	30.37	31.76	33.14	35.92	42.56	45.88	46.98	49.74	56.65	58.03	66.04	67.69
1.893	28	4.912	53	9.299	35.62	37.00	38.38	39.76	41.14	43.90	50.52	53.83	54.93	57.69	64.59	65.97	73.96	75.62
1.909	33	5.790	63	11.053	33.52	34.90	36.28	37.66	39.04	41.81	48.43	51.74	52.85	55.60	62.50	63.88	71.88	73.53
1.914	35	6.141	67	11.755	32.67	34.06	35.44	36.82	38.20	40.97	47.59	50.91	52.01	54.77	61.67	63.05	71.04	72.70
1.919	37	6.492	71	12.457	31.83	33.21	34.59	35.98	37.36	40.13	46.75	50.07	51.17	53.93	60.83	62.21	70.21	71.87
1.923	39	6.842	75	13.158	30.98	32.37	33.75	35.14	36.52	39.29	45.91	49.23	50.33	53.09	59.99	61.38	69.38	71.03
1.931	29	5.088	56	9.825	35.06	36.44	37.82	39.20	40.58	43.34	49.96	53.27	54.38	57.13	64.03	65.41	73.40	75.06
1.935	31	5.439	60	10.527	34.22	35.60	36.98	38.36	39.74	42.50	49.12	52.44	53.54	56.30	63.19	64.58	72.57	74.23
1.969	32	5.614	63	11.053	33.65	35.03	36.41	37.80	39.18	41.94	48.56	51.88	52.98	55.74	62.64	64.02	72.01	73.67
1.971	34	5.965	67	11.755	32.80	34.19	35.57	36.95	38.33	41.10	47.72	51.04	52.14	54.90	61.80	63.18	71.18	72.84
1.972	36	6.316	71	12.457	31.96	33.34	34.72	36.11	37.49	40.26	46.89	50.20	51.30	54.06	60.96	62.35	70.34	72.00
1.972	71	12.457	140	24.562			19.59	21.03	22.46	25.32	32.08	35.45	36.56	39.35	46.31	47.71	55.75	57.42
1.974	38	6.667	75	13.158	31.11	32.50	33.88	35.27	36.65	39.42	46.05	49.36	50.47	53.23	60.13	61.51	69.51	71.17
2.000	28	4.912	56	9.825	35.19	36.57	37.95	39.33	40.71	43.48	50.10	53.41	54.51	57.27	64.16	65.54	73.54	75.20
2.000	30	5.263	60	10.527	34.35	35.73	37.11	38.49	39.87	42.64	49.26	52.57	53.67	56.43	63.33	64.71	72.71	74.36
2.000	40	7.018	80	14.036	30.11	31.50	32.88	34.27	35.65	38.42	45.06	48.38	49.48	52.24	59.15	60.53	68.53	70.19
2.000	45	7.895	90	15.790	27.97	29.36	30.75	32.14	33.53	36.30	42.95	46.27	47.37	50.14	57.05	58.43	66.44	68.09
2.000	56	9.825	112	19.650	23.18	24.59	25.99	27.39	28.79	31.59	38.26	41.60	42.71	45.48	52.40	53.79	61.81	63.47
2.027	37	6.492	75	13.158	31.24	32.63	34.01	35.39	36.78	39.55	46.18	49.49	50.60	53.36	60.26	61.64	69.64	71.30
2.029	35	6.141	71	12.457	32.09	33.47	34.86	36.24	37.62	40.39	47.02	50.33	51.44	54.20	61.10	62.48	70.48	72.13
2.030	33	5.790	67	11.755	32.94	34.32	35.70	37.09	38.46	41.23	47.86	51.17	52.28	55.03	61.93	63.31	71.31	72.97
2.032	31	5.439	63	11.053	33.78	35.17	36.54	37.93	39.31	42.07	48.70	52.01	53.11	55.87	62.77	64.15	72.15	73.80
2.051	39	6.842	80	14.036	30.24	31.63	33.01	34.40	35.78	38.55	45.19	48.51	49.61	52.37	59.28	60.66	68.66	70.32
2.069	29	5.088	60	10.527	34.48	35.86	37.24	38.63	40.00	42.77	49.39	52.71	53.81	56.57	63.46	64.84	72.84	74.50
2.083	36	6.316	75	13.158	31.37	32.76	34.14	35.53	36.91	39.68	46.31	49.63	50.73	53.49	60.39	61.78	69.78	71.43
2.088	34	5.965	71	12.457	32.22	33.60	34.99	36.37	37.75	40.52	47.15	50.47	51.57	54.33	61.23	62.61	70.61	72.27
2.090	67	11.755	140	24.562		18.59	20.05	21.50	22.94	25.80	32.58	35.94	37.06	39.86	46.82	48.22	56.27	57.93
2.093	43	7.544	90	15.790	28.22	29.62	31.00	32.40	33.78	36.56	43.21	46.53	47.63	50.40	57.31	58.69	66.70	68.36
2.094	32	5.614	67	11.755	33.07	34.45	35.83	37.22	38.60	41.36	47.99	51.31	52.41	55.17	62.07	63.45	71.45	73.10
2.100	30	5.263	63	11.053	33.91	35.30	36.68	38.06	39.44	42.21	48.83	52.15	53.25	56.01	62.90	64.29	72.28	73.94
2.100	80	14.036	168	29.475							26.42	29.86	31.00	33.84	40.88	42.28	50.39	52.06
2.105	38	6.667	80	14.036	30.37	31.76	33.14	34.53	35.91	38.68	45.32	48.64	49.74	52.51	59.41	60.79	68.80	70.45
2.113	53	9.299	112	19.650	23.54	24.95	26.36	27.76	29.16	31.96	38.65	41.98	43.09	45.87	52.79	54.18	62.20	63.86
2.143	28	4.912	60	10.527	34.61	35.99	37.37	38.76	40.14	42.90	49.52	52.84	53.94	56.70	63.60	64.98	72.98	74.63
2.143	35	6.141	75	13.158	31.50	32.89	34.27	35.65	37.04	39.81	46.44	49.76	50.86	53.62	60.53	61.91	69.91	71.57
2.152	33	5.790	71	12.457	32.35	33.73	35.12	36.50	37.88	40.65	47.28	50.60	51.70	54.46	61.36	62.75	70.75	72.40
2.161	31	5.439	67	11.755	33.20	34.58	35.96	37.35	38.73	41.50	48.12	51.44	52.54	55.30	62.20	63.58	71.58	73.24
2.162	37	6.492	80	14.036	30.49	31.88	33.27	34.66	36.04	38.81	45.45	48.77	49.87	52.64	59.54	60.93	68.93	70.59
2.172	29	5.088	63	11.053	34.04	35.43	36.81	38.19	39.57	42.34	48.96	52.28	53.38	56.14	63.04	64.42	72.42	74.07
2.206	34	5.965	75	13.158	31.63	33.01	34.40	35.78	37.17	39.94	46.57	49.89	50.99	53.76	60.66	62.04	70.04	71.70
2.219	32	5.614	71	12.457	32.48	33.86	35.25	36.63	38.01	40.78	47.41	50.73	51.83	54.59	61.50	62.88	70.88	72.54
2.222	36	6.316	80	14.036	30.62	32.01	33.40	34.79	36.17	38.94	45.58	48.90	50.01	52.77	59.68	61.06	69.06	70.72
2.222	63	11.053	140	24.562		19.05	20.51	21.97	23.41	26.27	33.07	36.44	37.56	40.36	47.33	48.72	56.78	58.45
2.233	30	5.263	67	11.755	33.33	34.71	36.09	37.48	38.86	41.63	48.25	51.57	52.67	55.43	62.33	63.72	71.72	73.37
2.240	50	8.772	112	19.650	23.91	25.32	26.73	28.14	29.54	32.34	39.03	42.37	43.48	46.25	53.18	54.57	62.60	64.26
2.240	75	13.158	168	29.475							27.00	30.46	31.60	34.44	41.50	42.90	51.02	52.69
2.250	28	4.912	63	11.053	34.17	35.56	36.94	38.32	39.70	42.47	49.10	52.41	53.51	56.27	63.17	64.55	72.55	74.21
2.250	40	7.018	90	15.790	28.60	30.00	31.38	32.78	34.16	36.95	43.60	46.92	48.03	50.79	57.70	59.09	67.10	68.76
2.250	80	14.036	180	31.580							24.30	27.82	28.98	31.85	38.97	40.38	48.53	50.22
2.273	33	5.790	75	13.158	31.75	33.14	34.53	35.91	37.30	40.07	46.70	50.02	51.13	53.89	60.79	62.17	70.18	71.83
2.286	35	6.141	80	14.036	30.75	32.14	33.53	34.91	36.30	39.07	45.71	49.03	50.14	52.90	59.81	61.19	69.20	70.85
2.290	31	5.439	71	12.457	32.61	33.99	35.38	36.76	38.14	40.91	47.54	50.86	51.97	54.73	61.63	63.01	71.01	72.67
2.308	39	6.842	90	15.790	28.73	30.12	31.51	32.91	34.29	37.07	43.73	47.05	48.16	50.92	57.84	59.22	67.23	68.89
2.310	29	5.088	67	11.755	33.46	34.84	36.22	37.61	38.99	41.76	48.39	51.70	52.81	55.57	62.47	63.85	71.85	73.51
2.333	48	8.421	112	19.650	24.15	25.56	26.97	28.38	29.78	32.59	39.28	42.62	43.73	46.51	53.44	54.83	62.86	64.52
2.333	60	10.527	140	24.562		19.39	20.85	22.31	23.76	26.63	33.43	36.81	37.93	40.73	47.71	49.10	57.16	58.83
2.344	32	5.614	75	13.158	31.88	33.27	34.66	36.04	37.43	40.20	46.83	50.15	51.26	54.02	60.92	62.31	70.31	71.97
2.353	34	5.965	80	14.036	30.88	32.27	33.65	35.04	36.43	39.20	45.84	49.17	50.27	53.03	59.94	61.32	69.33	70.99
2.366	71	12.457	168	29.475							27.47	30.93	32.07	34.92	41.99	43.39	51.52	53.19
2.367	30	5.263	71	12.457	32.73	34.12	35.51	36.89	38.27	41.05	47.68	51.00	52.10	54.86	61.76	63.15	71.15	72.80
2.368	38	6.667	90	15.790	28.85	30.25	31.64	33.03	34.42	37.20	43.85	47.18	48.29	51.05	57.97	59.35	67.36	69.02
2.393	28	4.912	67	11.755	33.59	34.97	36.35	37.74	39.12	41.89	48.52	51.84	52.94	55.70	62.60	63.98	71.98	73.64
2.400	75	13.158	180	31.580							24.87	28.40	29.56	32.44	39.57	40.99	49.15	50.84
2.419	31	5.439	75	13.158	32.01	33.40	34.78	36.17	37.56	40.33	46.97	50.29	51.39	54.15	61.06	62.44	70.44	72.10
2.424	33	5.790	80	14.036	31.00	32.40	33.78	35.17	36.56	39.33	45.97	49.30	50.40	53.16	60.07	61.46	69.46	71.12
2.432	37	6.492	90	15.790	28.98	30.37	31.76	33.16	34.55	37.33	43.98	47.31	48.42	51.18	58.10	59.48	67.49	69.15
2.448	29	5.088	71	12.457	32.86	34.25	35.63	37.02	38.40	41.18	47.81	51.13	52.23	54.99	61.90	63.28	71.28	72.94
2.489	45	7.895	112	19.650	24.51	25.93	27.34	28.75	30.15	32.96	39.66	43.00	44.11	46.89	53.83	55.22	63.25	64.91
2.500	30	5.263	75	13.158	32.14	33.53	34.91	36.30	37.69	40.46	47.10	50.42	51.52	54.28	61.19	62.57	70.58	72.23
2.500	32	5.614	80	14.036	31.13	32.52	33.91	35.30	36.68	39.46	46.10	49.43	50.53	53.30	60.20	61.59	69.59	71.25
2.500	36	6.316	90	15.790	29.10	30.50	31.89	33.29	34.67	37.46	44.11	47.44	48.55	51.31	58.23	59.61	67.63	69.29
2.500	56	9.825	140	24.562	18.34	19.84	21.31	22.77	24.22	27.10	33.92	37.30	38.42	41.23	48.21	49.61	57.68	59.34
2.500	80	14.036	200	35.089									25.34	28.33	35.64	37.08	45.34	47.04
Length Factor*					**1.01**	**1.02**	**1.03**	**1.04**	**1.05**	**1.07**	**1.12**	**1.14**	**1.14**	**1.16**	**1.19**	**1.20**	**1.24**	**1.25**

Center distance is greater than eight times the small sprocket and the large sprocket is not flanged. See Engineering Section for details.

* The length correction factor must be used to determine the proper belt width.

Selection program available online at ptwizard.com and passport.baldor.com

HT500 selection table – 14mm pitch HT500 belts

Speed ratio	Sprocket combinations				Center distance, inches												
	Driver		Driven														
	No. of teeth	Pitch dia. inches	No. of teeth	Pitch dia. inches	994-14MX	1120-14MX	1190-14MX	1260-14MX	1400-14MX	1568-14MX	1610-14MX	1750-14MX	1890-14MX	1960-14MX	2100-14MX	2240-14MX	2310-14MX
Length factor*					**0.68**	**0.73**	**0.75**	**0.77**	**0.81**	**0.85**	**0.86**	**0.89**	**0.92**	**0.94**	**0.96**	**0.99**	**1.00**
2.507	67	11.755	168	29.475													
2.535	71	12.457	180	31.580													
2.536	28	4.912	71	12.457				10.48	13.38	16.80	17.65	20.46	23.26	24.65	27.44	30.22	31.60
2.571	35	6.141	90	15.790						12.71	13.61	16.52	19.38	20.80	23.62	26.43	27.83
2.581	31	5.439	80	14.036					11.45	14.95	15.81	18.66	21.48	22.88	25.68	28.47	29.86
2.586	29	5.088	75	13.158					12.58	16.02	16.88	19.71	22.51	23.91	26.70	29.49	30.88
2.605	43	7.544	112	19.650									14.57	16.07	19.01	21.89	23.32
2.642	53	9.299	140	24.562													
2.647	34	5.965	90	15.790						12.83	13.72	16.63	19.50	20.92	23.74	26.55	27.95
2.667	30	5.263	80	14.036					11.56	15.06	15.93	18.78	21.60	23.01	25.81	28.60	29.99
2.667	63	11.053	168	29.475													
2.667	75	13.158	200	35.089													
2.679	28	4.912	75	13.158					12.69	16.14	17.00	19.83	22.64	24.04	26.83	29.62	31.00
2.687	67	11.755	180	31.580													
2.727	33	5.790	90	15.790						12.94	13.83	16.75	19.62	21.04	23.87	26.68	28.07
2.759	29	5.088	80	14.036					11.67	15.18	16.05	18.90	21.72	23.13	25.93	28.73	30.12
2.800	40	7.018	112	19.650									14.90	16.41	19.36	22.25	23.68
2.800	50	8.772	140	24.562													17.47
2.800	60	10.527	168	29.475													
2.800	80	14.036	224	39.300													
2.813	32	5.614	90	15.790						13.05	13.95	16.87	19.73	21.16	23.99	26.80	28.20
2.817	71	12.457	200	35.089													
2.857	28	4.912	80	14.036					11.78	15.30	16.17	19.02	21.85	23.25	26.06	28.85	30.24
2.857	63	11.053	180	31.580													
2.872	39	6.842	112	19.650									15.01	16.52	19.47	22.36	23.80
2.903	31	5.439	90	15.790						13.16	14.06	16.98	19.85	21.28	24.11	26.92	28.32
2.917	48	8.421	140	24.562													17.69
2.947	38	6.667	112	19.650									15.12	16.63	19.58	22.48	23.91
2.985	67	11.755	200	35.089													
2.987	75	13.158	224	39.300													
3.000	30	5.263	90	15.790						13.27	14.17	17.10	19.97	21.40	24.23	27.05	28.45
3.000	56	9.825	168	29.475													
3.000	60	10.527	180	31.580													
3.027	37	6.492	112	19.650									15.23	16.74	19.70	22.60	24.03
3.103	29	5.088	90	15.790						13.38	14.28	17.21	20.09	21.52	24.35	27.17	28.57
3.111	36	6.316	112	19.650									15.34	16.85	19.81	22.72	24.15
3.111	45	7.895	140	24.562													18.01
3.155	71	12.457	224	39.300													
3.170	53	9.299	168	29.475													
3.175	63	11.053	200	35.089													
3.200	35	6.141	112	19.650									15.45	16.97	19.93	22.83	24.27
3.214	28	4.912	90	15.790						13.49	14.40	17.33	20.21	21.64	24.47	27.29	28.69
3.214	56	9.825	180	31.580													
3.256	43	7.544	140	24.562												16.65	18.23
3.294	34	5.965	112	19.650									15.56	17.08	20.04	22.95	24.39
3.333	60	10.527	200	35.089													
3.343	67	11.755	224	39.300													
3.360	50	8.772	168	29.475													
3.394	33	5.790	112	19.650									15.66	17.19	20.16	23.07	24.50
3.396	53	9.299	180	31.580													
3.500	32	5.614	112	19.650									15.77	17.30	20.27	23.18	24.62
3.500	40	7.018	140	24.562												16.97	18.55
3.500	48	8.421	168	29.475													
3.556	63	11.053	224	39.300													
3.571	56	9.825	200	35.089													
3.590	39	6.842	140	24.562												17.08	18.66
3.600	50	8.772	180	31.580													
3.613	31	5.439	112	19.650									15.88	17.41	20.38	23.30	24.74
3.684	38	6.667	140	24.562												17.18	18.77
3.733	30	5.263	112	19.650									15.99	17.52	20.50	23.41	24.85
3.733	45	7.895	168	29.475													
3.733	60	10.527	224	39.300													
3.750	48	8.421	180	31.580													
3.774	53	9.299	200	35.089													
3.784	37	6.492	140	24.562												17.29	18.87
3.862	29	5.088	112	19.650								12.91	16.10	17.63	20.61	23.53	24.97
3.889	36	6.316	140	24.562												17.39	18.98
3.907	43	7.544	168	29.475													
4.000	28	4.912	112	19.650								13.01	16.21	17.74	20.72	23.65	25.09
4.000	35	6.141	140	24.562												17.50	19.09
4.000	45	7.895	180	31.580													
4.000	50	8.772	200	35.089													
4.000	56	9.825	224	39.300													
Length Factor*					**0.68**	**0.73**	**0.75**	**0.77**	**0.81**	**0.85**	**0.86**	**0.89**	**0.92**	**0.94**	**0.96**	**0.99**	**1.00**

* The length correction factor must be used to determine the proper belt width.

Selection program available online at ptwizard.com and passport.baldor.com

HT500 selection table – 14mm pitch HT500 belts (continued)

Speed ratio	Sprocket combinations				Center distance, inches													
	Driver		Driven															
	No. of teeth	Pitch dia. inches	No. of teeth	Pitch dia. inches	2380-14MX	2450-14MX	2520-14MX	2590-14MX	2660-14MX	2800-14MX	3136-14MX	3304-14MX	3360-14MX	3500-14MX	3850-14MX	3920-14MX	4326-14MX	4410-14MX
Length factor*					**1.01**	**1.02**	**1.03**	**1.04**	**1.05**	**1.07**	**1.12**	**1.14**	**1.14**	**1.16**	**1.19**	**1.20**	**1.24**	**1.25**
2.507	67	11.755	168	29.475							27.93	31.40	32.54	35.40	42.48	43.89	52.02	53.70
2.535	71	12.457	180	31.580							25.32	28.85	30.02	32.91	40.05	41.47	49.64	51.33
2.536	28	4.912	71	12.457	32.99	34.38	35.76	37.15	38.53	41.31	47.94	51.26	52.36	55.12	62.03	63.41	71.41	73.07
2.571	35	6.141	90	15.790	29.23	30.62	32.02	33.41	34.80	37.59	44.24	47.57	48.68	51.44	58.36	59.75	67.76	69.42
2.581	31	5.439	80	14.036	31.26	32.65	34.04	35.43	36.81	39.59	46.23	49.56	50.66	53.43	60.34	61.72	69.73	71.38
2.586	29	5.088	75	13.158	32.27	33.66	35.04	36.43	37.81	40.59	47.23	50.55	51.65	54.41	61.32	62.70	70.71	72.37
2.605	43	7.544	112	19.650	24.75	26.17	27.58	28.99	30.40	33.21	39.91	43.26	44.37	47.15	54.09	55.48	63.51	65.17
2.642	53	9.299	140	24.562	18.67	20.17	21.65	23.12	24.57	27.46	34.28	37.67	38.79	41.60	48.59	49.99	58.06	59.73
2.647	34	5.965	90	15.790	29.35	30.75	32.14	33.54	34.93	37.71	44.37	47.70	48.81	51.57	58.49	59.88	67.89	69.55
2.667	30	5.263	80	14.036	31.39	32.78	34.17	35.56	36.94	39.72	46.36	49.69	50.79	53.56	60.47	61.85	69.86	71.52
2.667	63	11.053	168	29.475						21.26	28.39	31.87	33.02	35.88	42.96	44.37	52.51	54.19
2.667	75	13.158	200	35.089								24.67	25.89	28.90	36.22	37.66	45.95	47.65
2.679	28	4.912	75	13.158	32.40	33.79	35.17	36.56	37.94	40.72	47.36	50.68	51.78	54.55	61.45	62.84	70.84	72.50
2.687	67	11.755	180	31.580							25.76	29.31	30.48	33.38	40.53	41.95	50.14	51.82
2.727	33	5.790	90	15.790	29.48	30.88	32.27	33.66	35.05	37.84	44.50	47.83	48.94	51.70	58.62	60.01	68.02	69.68
2.759	29	5.088	80	14.036	31.51	32.91	34.29	35.68	37.07	39.85	46.49	49.82	50.92	53.69	60.60	61.98	69.99	71.65
2.800	40	7.018	112	19.650	25.11	26.53	27.94	29.36	30.76	33.58	40.29	43.64	44.75	47.53	54.47	55.86	63.90	65.56
2.800	50	8.772	140	24.562	19.00	20.51	21.99	23.46	24.92	27.81	34.65	38.04	39.16	41.97	48.97	50.36	58.44	60.11
2.800	60	10.527	168	29.475						21.59	28.74	32.22	33.37	36.23	43.33	44.74	52.89	54.57
2.800	80	14.036	224	39.300											31.31	32.81	41.32	43.05
2.813	32	5.614	90	15.790	29.60	31.00	32.39	33.79	35.18	37.97	44.63	47.96	49.07	51.83	58.75	60.14	68.15	69.81
2.817	71	12.457	200	35.089								25.10	26.33	29.34	36.68	38.13	46.43	48.13
2.857	28	4.912	80	14.036	31.64	33.03	34.42	35.81	37.20	39.98	46.62	49.95	51.05	53.82	60.73	62.12	70.12	71.78
2.857	63	11.053	180	31.580							26.21	29.77	30.94	33.84	41.01	42.43	50.63	52.32
2.872	39	6.842	112	19.650	25.23	26.65	28.06	29.48	30.89	33.70	40.41	43.76	44.88	47.66	54.60	55.99	64.03	65.69
2.903	31	5.439	90	15.790	29.73	31.13	32.52	33.92	35.31	38.09	44.76	48.09	49.19	51.96	58.88	60.27	68.29	69.95
2.917	48	8.421	140	24.562	19.22	20.73	22.22	23.69	25.15	28.05	34.89	38.28	39.41	42.22	49.22	50.62	58.69	60.36
2.947	38	6.667	112	19.650	25.34	26.77	28.18	29.60	31.01	33.83	40.54	43.89	45.00	47.78	54.73	56.12	64.16	65.82
2.985	67	11.755	200	35.089								25.53	26.76	29.79	37.15	38.60	46.91	48.61
2.987	75	13.158	224	39.300											31.86	33.37	41.90	43.64
3.000	30	5.263	90	15.790	29.85	31.25	32.64	34.04	35.43	38.22	44.89	48.22	49.32	52.09	59.02	60.40	68.42	70.08
3.000	56	9.825	168	29.475						22.02	29.19	32.69	33.84	36.71	43.81	45.23	53.38	55.06
3.000	60	10.527	180	31.580							26.54	30.11	31.28	34.19	41.37	42.79	50.99	52.68
3.027	37	6.492	112	19.650	25.46	26.89	28.31	29.72	31.13	33.95	40.66	44.02	45.13	47.91	54.86	56.25	64.29	65.95
3.103	29	5.088	90	15.790	29.97	31.38	32.77	34.17	35.56	38.35	45.01	48.35	49.45	52.22	59.15	60.53	68.55	70.21
3.111	36	6.316	112	19.650	25.58	27.01	28.43	29.84	31.25	34.07	40.79	44.14	45.25	48.04	54.99	56.38	64.42	66.08
3.111	45	7.895	140	24.562	19.55	21.07	22.56	24.03	25.49	28.40	35.25	38.65	39.77	42.59	49.59	50.99	59.07	60.75
3.155	71	12.457	224	39.300											32.30	33.81	42.36	44.10
3.170	53	9.299	168	29.475						22.35	29.54	33.03	34.19	37.06	44.18	45.59	53.75	55.44
3.175	63	11.053	200	35.089								25.97	27.20	30.23	37.61	39.06	47.38	49.09
3.200	35	6.141	112	19.650	25.70	27.13	28.55	29.96	31.37	34.19	40.91	44.27	45.38	48.16	55.11	56.50	64.55	66.21
3.214	28	4.912	90	15.790	30.10	31.50	32.90	34.29	35.69	38.48	45.14	48.48	49.58	52.35	59.28	60.66	68.68	70.34
3.214	56	9.825	180	31.580							26.99	30.56	31.74	34.65	41.84	43.27	51.48	53.17
3.256	43	7.544	140	24.562	19.77	21.29	22.78	24.26	25.72	28.63	35.49	38.89	40.02	42.83	49.84	51.24	59.33	61.00
3.294	34	5.965	112	19.650	25.82	27.25	28.67	30.09	31.50	34.32	41.04	44.39	45.51	48.29	55.24	56.63	64.67	66.34
3.333	60	10.527	200	35.089								26.29	27.53	30.57	37.95	39.41	47.74	49.45
3.343	67	11.755	224	39.300											32.74	34.26	42.82	44.57
3.360	50	8.772	168	29.475						22.67	29.88	33.38	34.54	37.41	44.54	45.96	54.12	55.81
3.394	33	5.790	112	19.650	25.94	27.37	28.79	30.21	31.62	34.44	41.16	44.52	45.63	48.42	55.37	56.76	64.80	66.47
3.396	53	9.299	180	31.580							27.32	30.90	32.08	35.00	42.20	43.63	51.85	53.54
3.500	32	5.614	112	19.650	26.06	27.49	28.91	30.33	31.74	34.56	41.29	44.64	45.76	48.54	55.50	56.89	64.93	66.60
3.500	40	7.018	140	24.562	20.10	21.62	23.12	24.60	26.07	28.98	35.85	39.25	40.38	43.20	50.21	51.61	59.71	61.38
3.500	48	8.421	168	29.475					19.71	22.89	30.11	33.61	34.77	37.65	44.78	46.20	54.37	56.06
3.556	63	11.053	224	39.300											33.18	34.70	43.28	45.03
3.571	56	9.825	200	35.089							22.87	26.72	27.96	31.01	38.41	39.87	48.22	49.93
3.590	39	6.842	140	24.562	20.21	21.73	23.23	24.71	26.18	29.10	35.97	39.37	40.50	43.32	50.34	51.74	59.83	61.51
3.600	50	8.772	180	31.580							27.65	31.24	32.42	35.35	42.56	43.99	52.21	53.91
3.613	31	5.439	112	19.650	26.17	27.61	29.03	30.45	31.86	34.68	41.41	44.77	45.88	48.67	55.63	57.02	65.06	66.73
3.684	38	6.667	140	24.562	20.32	21.84	23.34	24.83	26.30	29.21	36.09	39.49	40.62	43.44	50.46	51.86	59.96	61.63
3.733	30	5.263	112	19.650	26.29	27.72	29.15	30.57	31.98	34.81	41.54	44.90	46.01	48.80	55.75	57.15	65.19	66.86
3.733	45	7.895	168	29.475					20.03	23.21	30.45	33.96	35.12	38.00	45.14	46.56	54.74	56.42
3.733	60	10.527	224	39.300										25.60	33.51	35.03	43.63	45.38
3.750	48	8.421	180	31.580							27.87	31.47	32.65	35.58	42.79	44.22	52.45	54.15
3.774	53	9.299	200	35.089							23.18	27.04	28.28	31.34	38.76	40.22	48.57	50.29
3.784	37	6.492	140	24.562	20.43	21.95	23.45	24.94	26.41	29.33	36.21	39.62	40.74	43.56	50.59	51.99	60.08	61.76
3.862	29	5.088	112	19.650	26.41	27.84	29.27	30.69	32.10	34.93	41.66	45.02	46.14	48.92	55.88	57.27	65.32	66.98
3.889	36	6.316	140	24.562	20.54	22.06	23.56	25.05	26.52	29.44	36.33	39.74	40.87	43.69	50.71	52.11	60.21	61.88
3.907	43	7.544	168	29.475					20.23	23.43	30.67	34.19	35.35	38.24	45.38	46.80	54.98	56.67
4.000	28	4.912	112	19.650	26.53	27.96	29.39	30.81	32.22	35.05	41.79	45.15	46.26	49.05	56.01	57.40	65.45	67.11
4.000	35	6.141	140	24.562	20.65	22.17	23.68	25.17	26.64	29.56	36.45	39.86	40.99	43.81	50.83	52.24	60.34	62.01
4.000	45	7.895	180	31.580						20.61	28.20	31.81	32.99	35.92	43.15	44.58	52.82	54.51
4.000	50	8.772	200	35.089							23.49	27.36	28.61	31.67	39.10	40.56	48.93	50.64
4.000	56	9.825	224	39.300										26.01	33.95	35.47	44.09	45.84
Length Factor*					**1.01**	**1.02**	**1.03**	**1.04**	**1.05**	**1.07**	**1.12**	**1.14**	**1.14**	**1.16**	**1.19**	**1.20**	**1.24**	**1.25**

Center distance is greater than eight times the small sprocket and the large sprocket is not flanged. See Engineering Section for details.

* The length correction factor must be used to determine the proper belt width.

Selection program available online at ptwizard.com and passport.baldor.com

HT500 selection table – 14mm pitch HT500 belts

Speed ratio	Sprocket combinations				Center distance, inches												
	Driver		Driven														
	No. of teeth	Pitch dia. inches	No. of teeth	Pitch dia. inches	994-14MX	1120-14MX	1190-14MX	1260-14MX	1400-14MX	1568-14MX	1610-14MX	1750-14MX	1890-14MX	1960-14MX	2100-14MX	2240-14MX	2310-14MX
Length factor*					**0.68**	**0.73**	**0.75**	**0.77**	**0.81**	**0.85**	**0.86**	**0.89**	**0.92**	**0.94**	**0.96**	**0.99**	**1.00**
4.118	34	5.965	140	24.562												17.60	19.19
4.167	48	8.421	200	35.089													
4.186	43	7.544	180	31.580													
4.200	40	7.018	168	29.475													
4.226	53	9.299	224	39.300													
4.242	33	5.790	140	24.562												17.70	19.30
4.308	39	6.842	168	29.475													
4.375	32	5.614	140	24.562												17.81	19.41
4.421	38	6.667	168	29.475													
4.444	45	7.895	200	35.089													
4.480	50	8.772	224	39.300													
4.500	40	7.018	180	31.580													
4.516	31	5.439	140	24.562												17.91	19.51
4.541	37	6.492	168	29.475													
4.615	39	6.842	180	31.580													
4.651	43	7.544	200	35.089													
4.667	30	5.263	140	24.562												18.02	19.62
4.667	36	6.316	168	29.475													
4.667	48	8.421	224	39.300													
4.737	38	6.667	180	31.580													
4.800	35	6.141	168	29.475													
4.828	29	5.088	140	24.562												18.12	19.73
4.865	37	6.492	180	31.580													
4.941	34	5.965	168	29.475													
4.978	45	7.895	224	39.300													
5.000	28	4.912	140	24.562												18.23	19.83
5.000	36	6.316	180	31.580													
5.000	40	7.018	200	35.089													
5.091	33	5.790	168	29.475													
5.128	39	6.842	200	35.089													
5.143	35	6.141	180	31.580													
5.209	43	7.544	224	39.300													
5.250	32	5.614	168	29.475													
5.263	38	6.667	200	35.089													
5.294	34	5.965	180	31.580													
5.405	37	6.492	200	35.089													
5.419	31	5.439	168	29.475													
5.455	33	5.790	180	31.580													
5.556	36	6.316	200	35.089													
5.600	30	5.263	168	29.475													
5.600	40	7.018	224	39.300													
5.625	32	5.614	180	31.580													
5.714	35	6.141	200	35.089													
5.744	39	6.842	224	39.300													
5.793	29	5.088	168	29.475													
5.806	31	5.439	180	31.580													
5.882	34	5.965	200	35.089													
5.895	38	6.667	224	39.300													
6.000	28	4.912	168	29.475													
6.000	30	5.263	180	31.580													
6.054	37	6.492	224	39.300													
6.061	33	5.790	200	35.089													
6.207	29	5.088	180	31.580													
6.222	36	6.316	224	39.300													
6.250	32	5.614	200	35.089													
6.400	35	6.141	224	39.300													
6.429	28	4.912	180	31.580													
6.452	31	5.439	200	35.089													
6.588	34	5.965	224	39.300													
6.667	30	5.263	200	35.089													
6.788	33	5.790	224	39.300													
6.897	29	5.088	200	35.089													
7.000	32	5.614	224	39.300													
7.143	28	4.912	200	35.089													
7.226	31	5.439	224	39.300													
7.467	30	5.263	224	39.300													
7.724	29	5.088	224	39.300													
8.000	28	4.912	224	39.300													
Length Factor*					**0.68**	**0.73**	**0.75**	**0.77**	**0.81**	**0.85**	**0.86**	**0.89**	**0.92**	**0.94**	**0.96**	**0.99**	**1.00**

* The length correction factor must be used to determine the proper belt width.

Selection program available online at ptwizard.com and passport.baldor.com

HT500 selection table – 14mm pitch HT500 belts (continued)

Speed ratio	Sprocket combinations				Center distance, inches													
	Driver		Driven															
	No. of teeth	Pitch dia. inches	No. of teeth	Pitch dia. inches	2380-14MX	2450-14MX	2520-14MX	2590-14MX	2660-14MX	2800-14MX	3136-14MX	3304-14MX	3360-14MX	3500-14MX	3850-14MX	3920-14MX	4326-14MX	4410-14MX
Length factor*					**1.01**	**1.02**	**1.03**	**1.04**	**1.05**	**1.07**	**1.12**	**1.14**	**1.14**	**1.16**	**1.19**	**1.20**	**1.24**	**1.25**
4.118	34	5.965	140	24.562	20.75	22.28	23.79	25.28	26.75	29.68	36.57	39.98	41.11	43.93	50.96	52.36	60.46	62.14
4.167	48	8.421	200	35.089							23.70	27.58	28.82	31.89	39.33	40.79	49.16	50.88
4.186	43	7.544	180	31.580						20.81	28.42	32.03	33.21	36.15	43.38	44.82	53.06	54.76
4.200	40	7.018	168	29.475				18.87	20.55	23.75	31.01	34.54	35.70	38.59	45.74	47.16	55.35	57.04
4.226	53	9.299	224	39.300										26.32	34.28	35.80	44.43	46.18
4.242	33	5.790	140	24.562	20.86	22.39	23.90	25.39	26.86	29.79	36.68	40.10	41.23	44.05	51.08	52.49	60.59	62.26
4.308	39	6.842	168	29.475				18.97	20.65	23.86	31.13	34.65	35.81	38.71	45.86	47.28	55.47	57.16
4.375	32	5.614	140	24.562	20.97	22.50	24.01	25.50	26.98	29.91	36.80	40.22	41.35	44.17	51.21	52.61	60.71	62.39
4.421	38	6.667	168	29.475				19.08	20.75	23.97	31.24	34.77	35.93	38.82	45.98	47.40	55.60	57.29
4.444	45	7.895	200	35.089							24.01	27.90	29.15	32.22	39.67	41.14	49.52	51.24
4.480	50	8.772	224	39.300										26.63	34.60	36.13	44.77	46.53
4.500	40	7.018	180	31.580						21.12	28.75	32.37	33.55	36.49	43.73	45.17	53.42	55.12
4.516	31	5.439	140	24.562	21.08	22.61	24.12	25.62	27.09	30.02	36.92	40.34	41.47	44.30	51.33	52.73	60.84	62.51
4.541	37	6.492	168	29.475				19.18	20.86	24.07	31.35	34.88	36.04	38.94	46.10	47.52	55.72	57.41
4.615	39	6.842	180	31.580						21.23	28.86	32.48	33.66	36.61	43.85	45.29	53.54	55.24
4.651	43	7.544	200	35.089							24.21	28.11	29.36	32.44	39.90	41.37	49.75	51.47
4.667	30	5.263	140	24.562	21.19	22.72	24.23	25.73	27.21	30.14	37.04	40.46	41.59	44.42	51.45	52.86	60.97	62.64
4.667	36	6.316	168	29.475				19.28	20.96	24.18	31.46	35.00	36.16	39.06	46.22	47.64	55.84	57.53
4.667	48	8.421	224	39.300										26.84	34.82	36.35	45.00	46.76
4.737	38	6.667	180	31.580						21.33	28.97	32.59	33.78	36.72	43.97	45.41	53.66	55.36
4.800	35	6.141	168	29.475				19.38	21.06	24.29	31.58	35.11	36.27	39.17	46.34	47.76	55.96	57.65
4.828	29	5.088	140	24.562	21.30	22.83	24.34	25.84	27.32	30.25	37.16	40.58	41.71	44.54	51.58	52.98	61.09	62.77
4.865	37	6.492	180	31.580						21.43	29.08	32.70	33.89	36.84	44.09	45.52	53.78	55.48
4.941	34	5.965	168	29.475				19.48	21.17	24.39	31.69	35.23	36.39	39.29	46.46	47.88	56.08	57.78
4.978	45	7.895	224	39.300										27.14	35.15	36.68	45.34	47.10
5.000	28	4.912	140	24.562	21.40	22.94	24.45	25.95	27.43	30.37	37.28	40.70	41.83	44.66	51.70	53.10	61.22	62.89
5.000	36	6.316	180	31.580						21.53	29.19	32.81	34.00	36.95	44.20	45.64	53.90	55.61
5.000	40	7.018	200	35.089							24.52	28.43	29.68	32.77	40.24	41.71	50.11	51.83
5.091	33	5.790	168	29.475				19.58	21.27	24.50	31.80	35.34	36.50	39.40	46.57	48.00	56.21	57.90
5.128	39	6.842	200	35.089							24.62	28.53	29.79	32.88	40.35	41.82	50.22	51.95
5.143	35	6.141	180	31.580						21.63	29.30	32.93	34.11	37.06	44.32	45.76	54.02	55.73
5.209	43	7.544	224	39.300										27.35	35.37	36.90	45.57	47.33
5.250	32	5.614	168	29.475				19.69	21.38	24.61	31.91	35.45	36.62	39.52	46.69	48.12	56.33	58.02
5.263	38	6.667	200	35.089							24.73	28.64	29.90	32.99	40.47	41.94	50.34	52.06
5.294	34	5.965	180	31.580						21.74	29.41	33.04	34.23	37.18	44.44	45.88	54.15	55.85
5.405	37	6.492	200	35.089							24.83	28.75	30.01	33.10	40.58	42.05	50.46	52.18
5.419	31	5.439	168	29.475			18.00	19.79	21.48	24.71	32.03	35.57	36.73	39.64	46.81	48.24	56.45	58.14
5.455	33	5.790	180	31.580						21.84	29.52	33.15	34.34	37.29	44.56	45.99	54.27	55.97
5.556	36	6.316	200	35.089							24.93	28.85	30.11	33.21	40.70	42.17	50.58	52.30
5.600	30	5.263	168	29.475			18.10	19.89	21.58	24.82	32.14	35.68	36.85	39.75	46.93	48.36	56.57	58.26
5.600	40	7.018	224	39.300									24.13	27.66	35.69	37.23	45.91	47.67
5.625	32	5.614	180	31.580						21.94	29.62	33.26	34.45	37.41	44.67	46.11	54.39	56.09
5.714	35	6.141	200	35.089							25.03	28.96	30.22	33.32	40.81	42.28	50.69	52.42
5.744	39	6.842	224	39.300									24.23	27.76	35.80	37.34	46.02	47.79
5.793	29	5.088	168	29.475			18.19	19.99	21.69	24.93	32.25	35.80	36.96	39.87	47.05	48.48	56.69	58.39
5.806	31	5.439	180	31.580						22.04	29.73	33.37	34.56	37.52	44.79	46.23	54.51	56.21
5.882	34	5.965	200	35.089							25.14	29.07	30.33	33.43	40.92	42.39	50.81	52.53
5.895	38	6.667	224	39.300									24.32	27.86	35.91	37.45	46.14	47.90
6.000	28	4.912	168	29.475			18.29	20.09	21.79	25.03	32.36	35.91	37.08	39.99	47.17	48.60	56.81	58.51
6.000	30	5.263	180	31.580						22.14	29.84	33.48	34.68	37.63	44.91	46.35	54.63	56.33
6.054	37	6.492	224	39.300									24.42	27.96	36.02	37.56	46.25	48.01
6.061	33	5.790	200	35.089							25.24	29.17	30.43	33.53	41.03	42.51	50.93	52.65
6.207	29	5.088	180	31.580						22.25	29.95	33.59	34.79	37.75	45.02	46.46	54.75	56.45
6.222	36	6.316	224	39.300									24.52	28.07	36.12	37.67	46.36	48.13
6.250	32	5.614	200	35.089							25.34	29.28	30.54	33.64	41.15	42.62	51.04	52.77
6.400	35	6.141	224	39.300									24.62	28.17	36.23	37.78	46.48	48.24
6.429	28	4.912	180	31.580					18.70	22.35	30.06	33.71	34.90	37.86	45.14	46.58	54.87	56.57
6.452	31	5.439	200	35.089							25.44	29.38	30.65	33.75	41.26	42.74	51.16	52.89
6.588	34	5.965	224	39.300								23.19	24.72	28.27	36.34	37.88	46.59	48.36
6.667	30	5.263	200	35.089							25.55	29.49	30.76	33.86	41.37	42.85	51.28	53.01
6.788	33	5.790	224	39.300								23.28	24.82	28.37	36.45	37.99	46.70	48.47
6.897	29	5.088	200	35.089							25.65	29.59	30.86	33.97	41.49	42.96	51.40	53.12
7.000	32	5.614	224	39.300								23.38	24.92	28.47	36.56	38.10	46.82	48.58
7.143	28	4.912	200	35.089							25.75	29.70	30.97	34.08	41.60	43.08	51.51	53.24
7.226	31	5.439	224	39.300								23.48	25.02	28.58	36.66	38.21	46.93	48.70
7.467	30	5.263	224	39.300								23.58	25.11	28.68	36.77	38.32	47.04	48.81
7.724	29	5.088	224	39.300								23.67	25.21	28.78	36.88	38.43	47.15	48.93
8.000	28	4.912	224	39.300								23.77	25.31	28.88	36.99	38.54	47.27	49.04
Length Factor*					**1.01**	**1.02**	**1.03**	**1.04**	**1.05**	**1.07**	**1.12**	**1.14**	**1.14**	**1.16**	**1.19**	**1.20**	**1.24**	**1.25**

Center distance is greater than eight times the small sprocket and the large sprocket is not flanged. See Engineering Section for details.

* The length correction factor must be used to determine the proper belt width.

Selection program available online at ptwizard.com and passport.baldor.com

Features and benefits

Taper-Lock bushings

Taper-Lock keyway-type bushing

Taper-Lock Integral key bushing

- Clean, compact design
- An industry standard for over 40 years
- Easy-on, easy-off
- 8° Taper-grips tight, holds tight, runs true, no wobble
- Total system concept: bushings, hubs, adapters and products
- World-wide acceptance and availability
- Flush mounting – no protruding parts
- Diamond ® integral key for added value and convenience

Simple mounting

Easy On

- Insert bushing into sprocket
- Match holes (not threads).
- Put screws into holes that are farthest apart
- Slip entire unit onto shaft
- Set drive alignment and tighten screws

Easy Off

- Take both screws out entirely
- Insert one screw into hole that is threaded in the bushing only
- Use as jackscrew to disengage bushing

Important!

Do not use lubricants or anti-seize compounds on tapered bore, bushing suitcase, shaft or screws.
Complete installation instructions are available on www.baldor.com.

Features and benefits

Dodge Taper-Lock bushing with integral key

- Popular bore sizes, 1008 thru 2517
- Capitalizes on proven Dodge® sintered steel technology
- Convenience: no more fumbling with a separate key and setscrew over the key. Integral key cannot work loose or fall out.
- More Secure fit: clearances between key and bushing are automatically eliminated, providing a more precise fit. Provides full key even in maximum bore sizes. . . no more “shallow keyseat” compromise.
- Cost Reduction: eliminates labor cost associated with installing key and separate key, and associated inventory expense.
- Engineered and tested design: Integral key concept thoroughly analyzed, including computerized Finite Element Analysis (FEA), for stress evaluation. Extensive laboratory testing included static and dynamic loading on customized machinery. Results demonstrated in successful field applications.

Example: Nomenclature

Taper-Lock bushing

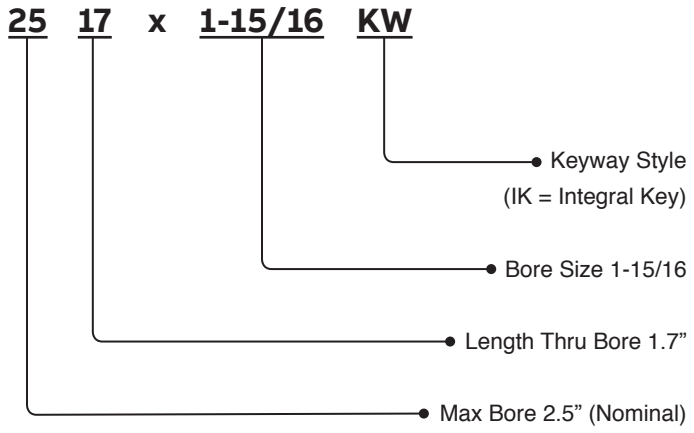

Specifications

Taper-Lock bushings – dimensions

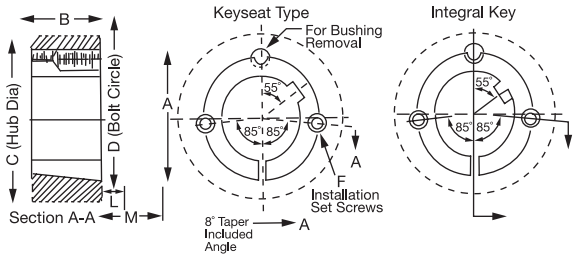

Dimensions for 1008 thru 3030 Taper-Lock bushings

Bush number	Ratings (lb-in) Torque capacity ◆	Ratings (lb-in) Wrench torque install screws	A	B	C hub dia ■ CL 30	C hub dia ■ Steel	D	F † Qty	F † Size	L ● Std hex key	L ● Short key ▲	M ★ Std. hex key	M ★ Short key ▲
1008	1200	55	1.39	0.87	2.19	1.94	1.33	2	1/4 X 1/2	1.13	0.63	1.25	0.75
1108	1300	55	1.51	0.87	2.31	2.06	1.45	2	1/4 X 1/2	1.13	0.63	1.25	0.75
1210	3600	175	1.87	1.00	3.25	2.88	1.75	2	3/8 X 5/8	1.38	0.81	1.63	1.10
1215	3550	175	1.87	1.50	2.88	2.63	1.75	2	3/8 X 5/8	1.38	0.81	1.63	1.10
1310	3850	175	2.00	1.00	3.38	3.00	1.88	2	3/8 X 5/8	1.38	0.81	1.63	1.10
1610	4300	175	2.25	1.00	3.63	3.25	2.13	2	3/8 X 5/8	1.38	0.81	1.63	1.10
1615	4300	175	2.25	1.50	3.25	3.00	2.13	2	3/8 X 5/8	1.38	0.81	1.63	1.10
2012	7150	280	2.75	1.25	4.38	3.88	2.63	2	7/16 X 7/8	1.56	0.94	2.00	1.38
2517	11600	430	3.38	1.75	4.88	4.38	3.25	2	1/2 X 1	1.63	1.00	2.25	1.63
2525	11300	430	3.38	2.50	4.50	4.25	3.25	2	1/2 X 1	1.63	1.00	2.25	1.63
3020	24000	800	4.25	2.00	6.25	5.63	4.00	2	5/8 X 1-1/4	1.81	1.19	2.69	2.10
3030	24000	800	4.25	3.00	5.75	5.38	4.00	2	5/8 X 1-1/4	1.81	1.19	2.69	2.10

3535 thru 5050 Size

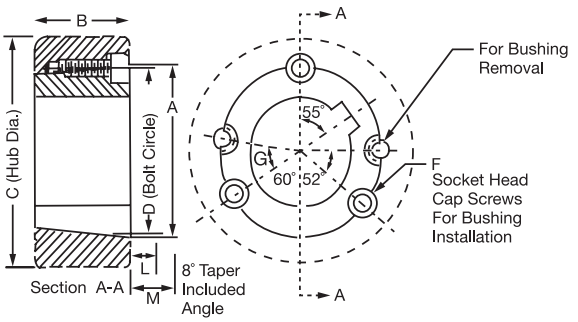

Dimensions for 3525 thru 5050 Taper-Lock bushings

Bush number	Ratings (lb-in) Torque capacity ◆	Ratings (lb-in) Wrench torque install screws	A	B	C hub dia ■ CL 30	C hub dia ■ Steel	D	F † Qty	F † Size	G	L ● Std hex key	L ● Short key ▲	M ★ Std. hex key	M ★ Short key ▲
3525	44800	1000	5.00	2.50	7.00	6.50	4.83	3	1/2 X 1-1/2	39	2.00	1.31	3.38	2.69
3535	44800	1000	5.00	3.50	7.00	6.50	4.83	3	1/2 X 1-1/2	39	2.00	1.31	3.38	2.69
4030	77300	1700	5.75	3.00	8.50	7.75	5.54	3	5/8 X 1-3/4	39	2.39	1.63	4.13	3.38
4040	77300	1700	5.75	4.00	8.50	7.75	5.54	3	5/8 X 1-3/4	40	2.39	1.63	4.13	3.38
4535	110000	2450	6.38	3.50	9.50	8.75	6.13	3	3/4 X 2	40	2.63	1.94	4.75	4.10
4545	110000	2450	6.38	4.50	9.50	8.75	6.13	3	3/4 X 2	40	2.63	1.94	4.75	4.10
5040	126000	3100	7.00	4.00	10.50	9.50	6.72	3	7/8 X 2-1/4	37	2.81	2.31	5.25	4.81
5050	126000	3100	7.00	5.00	10.50	9.50	6.72	3	7/8 X 2-1/4	37	2.81	2.31	5.25	4.81

Note: For dimensions required for machining hubs, consult factory.

■ Hub diameter required depends on the application.
Hub diameter shown is based on 30,000 P.S.I. minimum ultimate tensile strength.

◆ Important: refer to service factor information on page 79.

● Space required to tighten bushing.
Also space required to loosen screws to permit removal of hub by puller.

★ Space required to remove bushing using jackscrews-no puller required

▲ Standard hex key cut to minimum usable length.

† Use in position shown in drawing above for tightening bushing on shaft.
When loosening bushing remove screws and use all except one in the other holes.

NOTE: Installation and maintenance instructions for Dodge products available at www.baldor.com

Specifications

Taper-Lock bushings – dimensions

6050 thru 120100 Sizes

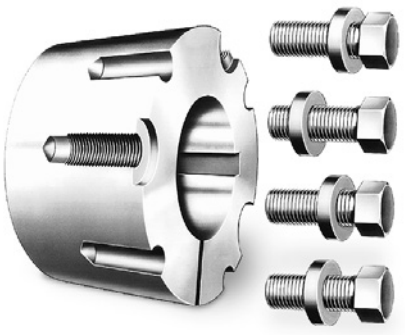

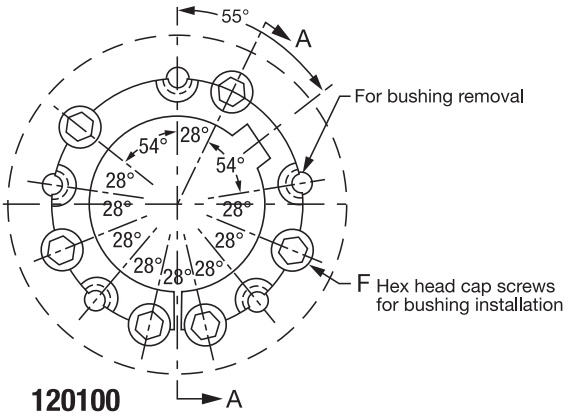

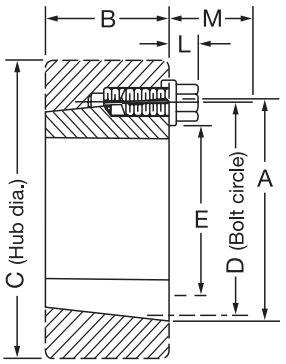

8° Taper included angle

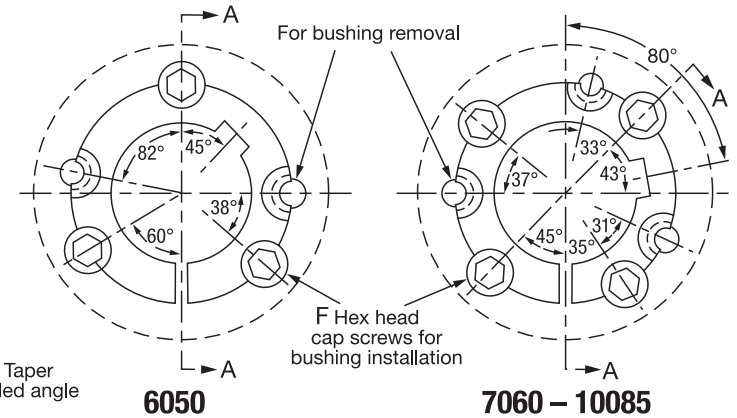

Dimensions for 6050 thru 120100 Taper-Lock bushings

Bush no.	Ratings (lb-in) Torque capacity ◆	Ratings (lb-in) Wrench torque install screws	A	B	C hub dia CL 30	C hub dia Steel	D	E	F Qty	F Size	L	M
6050	282000	7820	9.25	5.00	15.50	13.50	9.00	6.75	3	1-1/4 X 3-1/2	1.63	4.38
7060	416000	7820	10.25	6.00	17.00	14.80	10.00	7.75	4	1-1/4 X 3-1/2	1.63	4.38
8065	456000	7820	11.25	6.50	17.50	15.50	11.00	8.75	4	1-1/4 X 3-1/2	1.63	4.38
10085	869000	13700	14.75	8.50	22.00	19.50	14.50	11.75	4	1-1/2 X 4-1/4	2.00	5.38
120100	1520000	13700	17.25	10.00	26.00	23.00	17.00	14.25	6	1-1/2 X 4-1/4	2.00	5.38

Note: For dimensions required for machining hubs, consult factory.

■ Hub diameter required depends on the application. Hub diameter shown is based on 30,000 P.S.I. minimum ultimate tensile strength.

† Use in position shown in drawing above for tightening bushing on shaft. When loosening bushing remove screws and use all except one in the other holes.

● Space required to tighten bushing. Also space required to loosen screws to permit removal of hub by puller.

★ Space required to loosen bushing using screws as jackscrews - no puller required.

◆ Peak torque loads must not exceed torque capacity rating shown. Capacity values shown are for light starting and steady running conditions. For more severe duty, divide torque capacity by service factor suggested in following table.

Service factor	Type of loading
1.00	Light starting and steady running
1.50	Light starting and uneven running
2.00	Fairly heavy starting and steady or uneven running
2.50	Light or heavy starting and moderate shock running
3.00	Light or heavy starting and severe shock running, or reversing loads

Specifications

Taper-Lock bushings – stock bore

TL bush size	Bore	P/N integral key	P/N keyway	Wt.	Bushing keyway	Shaft keyway ref	Key size ref
1008	1/2”		**119176**	0.3	1/8 x 1/16	1/8 x 1/16	1/8 x 1/8
	9/16”		**119177**	0.3			
	5/8”		**117073**	0.3	3/16 x 3/32	3/16 x 3/32	3/16 x 3/16
	11/16”		**119179**	0.2			
	3/4”	**119180**	**117150**	0.2			
	13/16”		**119181**	0.2			
	7/8”	**119182**	**117074**	0.2			
	15/16” #		**119183**	0.2	1/4 x 1/16	1/4 x 1/8	1/4 x 3/16 Δ
	1” #	**119184**	**117151**	0.2			
	14mm		**119565**	0.3	5 x 2.3mm	5 x 5.3mm	5 x 5mm
	16mm		**119566**	0.3			
	18mm		**119575**	0.3	6 x 2.8mm	6 x 3.5mm	6 x 6mm
	19mm		**119569**	0.3			
	20mm		**119576**	0.3			
	22mm		**119577**	0.2			
	24mm		**119567**	0.2	8 x 1.3mm	8 x 4mm	8 X 7mm
	25mm		**119568**	0.2			
1108	1/2”		**119365**	0.3	1/8 x 1/4	1/8 x 1/4	1/8 x 1/8
	9/16”		**119366**	0.3			
	5/8”	**119367**	**117075**	0.3	3/16 x 3/32	3/16 x 3/32	3/16 x 3/16
	11/16”		**119368**	0.2			
	3/4”		**117152**	0.2			
	13/16”		**119370**	0.2			
	7/8”	**119371**	**117076**	0.2			
	15/16”		**119372**	0.2	1/4 x 1/8	1/4 x 1/8	1/4 x 1/4
	1”		**117153**	0.2			
	1-1/16” #		**119374**	0.2	1/4 x 1/16	1/4 x 1/8	1/4 x 3/16 Δ
	1-1/8” #		**117077**	0.1			
	14mm		**119651**	0.3	5 x 2.3mm	5 x 5.3mm	5 x 5mm
	16mm		**119652**	0.3			
	18mm		**119653**	0.3	6 x 2.8mm	6 x 3.5mm	6 x 6mm
	19mm		**119570**	0.3			
	20mm		**119579**	0.3			
	22mm		**119580**	0.3			
	24mm		**119581**	0.2	8 X 3.3mm	8 X 4mm	8 X 7mm
	25mm		**119582**	0.2			
1210	1/2”		**119191**	0.6	1/8 x 1/16	1/8 x 1/16	1/8 x 1/8
	9/16”		**119192**	0.6			
	5/8”		**117078**	0.6	3/16 x 3/32	3/16 x 3/32	3/16 x 3/16
	11/16”		**119194**	0.5			
	3/4”	**119195**	**117154**	0.5			
	13/16”		**119196**	0.5			
	7/8”	**119197**	**117079**	0.5			
	15/16”		**119198**	0.5	1/4 x 1/8	1/4 x 1/8	1/4 x 1/4
	1”	**119199**	**117155**	0.5			
	1-1/16”		**119200**	0.4			
	1-1/8”	**119201**	**117080**	0.4			
	1-3/16”		**117156**	0.4			
	1-1/4”		**117157**	0.4			
	14mm		**119583**	0.6	5 x 2.3mm	5 x 5.3mm	5 x 5mm
	16mm		**119654**	0.6			
	18mm		**119584**	0.5	6 x 2.8mm	6 x 3.5mm	6 x 6mm
	19mm		**119571**	0.5			
	20mm		**119585**	0.5			
	22mm		**119655**	0.5			
	24mm		**119586**	0.5	8 X 3.3mm	8 X 4mm	8 X 7mm
	25mm		**119587**	0.4			
	28mm		**119588**	0.4			
	30mm		**119589**	0.4			
	32mm		**119590**	0.4	10 X 3.3mm	10 X 5mm	10 X 8mm

Δ Key furnished for these sizes ONLY
\+ These sizes are STEEL
\# Refer to torque capacity ratings on page 78.
If service factor of 2.0 or greater is required consult Baldor

TL bush size	Bore	P/N integral key	P/N keyway	Wt.	Bushing keyway	Shaft keyway ref	Key size ref
1215	1/2”		**119001**	0.9	1/8 x 1/16	1/8 x 1/16	1/8 x 1/8
	9/16”		**119002**	0.9			
	5/8”		**119003**	0.8	3/16 x 3/32	3/16 x 3/32	3/16 x 3/16
	11/16”		**119004**	0.8			
	3/4”		**119005**	0.8			
	13/16”		**119006**	0.8			
	7/8”		**119007**	0.8			
	15/16”		**119008**	0.8	1/4 x 1/8	1/4 x 1/8	1/4 x 1/4
	1”		**119009**	0.7			
	1-1/16”		**119010**	0.6			
	1-1/8”		**119011**	0.6			
	1-3/16”		**119012**	0.5			
	1-1/4”		**119013**	0.5			
1310	1/2”		**119390**	0.7	1/8 x 1/16	1/8 x 1/16	1/8 x 1/8
	9/16”		**119391**	0.7			
	5/8”		**119392**	0.7	3/16 x 3/32	3/16 x 3/32	3/16 x 3/16
	11/16”		**119393**	0.7			
	3/4”		**119394**	0.7			
	13/16”		**119395**	0.7			
	7/8”		**119396**	0.7			
	15/16”		**119397**	0.6	1/4 x 1/8	1/4 x 1/8	1/4 x 1/4
	1”		**119398**	0.6			
	1-1/16”		**119399**	0.6			
	1-1/8”		**119400**	0.6			
	1-3/16”		**119401**	0.6			
	1-1/4”		**119402**	0.6			
	1-5/16” #		**119403**	0.6	5/16 x 5/32	5/16 x 5/32	5/16 x 5/16
	1-3/8” #		**119404**	0.6			
	1-7/16” +		**119438**	0.6	3/8 x 1/8	3/8 x 3/16	3/8 x 5/16 Δ
	14mm		**119656**	0.7	5 x 2.3mm	5 x 5.3mm	5 x 5mm
	16mm		**119657**	0.7			
	18mm		**119658**	0.7	6 x 2.8mm	6 x 3.5mm	6 x 6mm
	19mm		**119572**	0.7			
	20mm		**119659**	0.6			
	22mm		**119660**	0.6			
	24mm		**119591**	0.6	8 X 3.3mm	8 X 4mm	8 X 7mm
	25mm		**119592**	0.5			
	28mm		**119593**	0.5			
	30mm		**119594**	0.5			
	32mm		**119595**	0.4	10 X 3.3mm	10 X 5mm	10 X 8mm
	35mm		**119596**	0.4			
1610	1/2”		**119211**	0.9	1/8 x 1/16	1/8 x 1/16	1/8 x 1/8
	9/16”		**119212**	0.9			
	5/8”	**119213**	**117081**	0.9	3/16 x 3/32	3/16 x 3/32	3/16 x 3/16
	11/16”		**119214**	0.9			
	3/4”	**119215**	**117158**	0.9			
	13/16”		**119216**	0.9			
	7/8”	**119217**	**117082**	0.8			
	15/16”		**117083**	0.8	1/4 x 1/8	1/4 x 1/8	1/4 x 1/4
	1”	**119219**	**117159**	0.8			
	1-1/16”		**119220**	0.8			
	1-1/8”	**119221**	**117084**	0.7			
	1-3/16”	**119222**	**117160**	0.7			
	1-1/4”	**119223**	**117161**	0.7			
	1-5/16”		**119224**	0.6	5/16 x 5/32	5/16 x 5/32	5/16 x 5/16
	1-3/8”	**119225**	**117085**	0.6			
	1-7/16”	**119226**	**117162**	0.6	3/8 x 3/16	3/8 x 3/16	3/8 x 3/8
	1-1/2”	**119227**	**117163**	0.5			
	1-9/16” #		**119228**	0.5	3/8 x 1/8	3/8 x 3/16	3/8 x 5/16 Δ
	1-5/8” #	**119229**	**117086**	0.5			
	1-11/16” +		**117071**	0.5			
	14mm		**119661**	0.9	5 x 2.3mm	5 x 5.3mm	5 x 5mm
	16mm		**119662**	0.9			

Specifications

Taper-Lock bushings – stock bore

TL bush size	Bore	P/N integral key	P/N keyway	Wt.	Bushing keyway	Shaft keyway ref	Key size ref
1610 (cont)	18mm		**119663**	0.9	6 x 2.8mm	6 x 3.5mm	6 x 6mm
	19mm		**119573**	0.8			
	20mm		**119598**	0.8			
	22mm		**119236**	0.8			
	24mm		**119599**	0.8	8 X 3.3mm	8 X 4mm	8 X 7mm
	25mm		**119600**	0.7			
	28mm		**119601**	0.7			
	30mm		**119602**	0.7			
	32mm		**119603**	0.6	10 X 3.3mm	10 X 5mm	10 X 8mm
	35mm		**119604**	0.6			
	38mm		**119605**	0.5			
	40mm		**119606**	0.5	12 X 3.3mm	12 X 5mm	12 X 8mm
	42mm +		**393002**	0.5			
1615	1/2”		**119040**	1.3	1/8 x 1/16	1/8 x 1/16	1/8 x 1/8
	9/16”		**119041**	1.3			
	5/8”		**119042**	1.3	3/16 x 3/32	3/16 x 3/32	3/16 x 3/16
	11/16”		**119043**	1.2			
	3/4”		**119044**	1.2			
	13/16”		**119045**	1.2			
	7/8”		**119046**	1.1			
	15/16”		**119047**	1.1	1/4 x 1/8	1/4 x 1/8	1/4 x 1/4
	1”		**119048**	1.1			
	1-1/16”		**119049**	1			
	1-1/8”		**119050**	1			
	1-3/16”		**119051**	1			
	1-1/4”		**119052**	0.9			
	1-5/16”		**119053**	0.8	5/16 x 5/32	5/16 x 5/32	5/16 x 5/16
	1-3/8”		**119054**	0.8			
	1-7/16”		**119055**	0.7	3/8 x 3/16	3/8 x 3/16	3/8 x 3/8
	1-1/2”		**119056**	0.7			
	1-9/16” #		**119057**	0.7	3/8 x 1/8	3/8 x 3/16	3/8 x 5/16 Δ
	1-5/8” #		**119058**	0.6			
	1-11/16” +		**119068**	0.6			
	25mm		**119039**	0.7	8 X 3.3mm	8 X 4mm	8 X 7mm
	35mm		**119038**	0.7	10 X 3.3mm	10 X 5mm	10 X 8mm
2012	1/2”		**119241**	1.7	1/8 x 1/16	1/8 x 1/16	1/8 x 1/8
	9/16”		**119242**	1.7			
	5/8”		**117087**	1.7	3/16 x 3/32	3/16 x 3/32	3/16 x 3/16
	11/16”		**119244**	1.7			
	3/4”		**117088**	1.7			
	13/16”		**119246**	1.7			
	7/8”		**117089**	1.6			
	15/16”		**119248**	1.6	1/4 x 1/8	1/4 x 1/8	1/4 x 1/4
	1”	**119249**	**117164**	1.6			
	1-1/16”		**119250**	1.6			
	1-1/8”		**117090**	1.5			
	1-3/16”	**119252**	**117165**	1.5			
	1-1/4”	**119253**	**117166**	1.4			
	1-5/16”		**119254**	1.3	5/16 x 5/32	5/16 x 5/32	5/16 x 5/16
	1-3/8”		**117091**	1.2			
	1-7/16”	**119256**	**117167**	1.2	3/8 x 3/16	3/8 x 3/16	3/8 x 3/8
	1-1/2”	**119257**	**117168**	1.2			
	1-9/16”		**119258**	1.2			
	1-5/8”		**117092**	1.2			
	1-11/16”		**117093**	1.1			
	1-3/4”		**117094**	1			
	1-13/16”		**119262**	1	1/2 x 1/4	1/2 x 1/4	1/2 x 1/2
	1-7/8”		**117095**	0.9			

Δ Key furnished for these sizes ONLY
\+ These sizes are STEEL
\# Refer to torque capacity ratings on page 78.
If service factor of 2.0 or greater is required consult Baldor

TL bush size	Bore	P/N integral key	P/N keyway	Wt.	Bushing keyway	Shaft keyway ref	Key size ref
2012 (cont)	1-15/16” #		**117169**	0.9	1/2 x 3/16	1/2 x 1/4	1/2 x 7/16 Δ
	2” #		**117170**	0.9			
	2-1/8” +		**117177**	0.9			
	14mm		**119664**	1.7	5 x 2.3mm	5 x 5.3mm	5 x 5mm
	16mm		**119665**	1.7			
	18mm		**119666**	1.6	6 x 2.8mm	6 x 3.5mm	6 x 6mm
	19mm		**119574**	1.6			
	20mm		**119607**	1.6			
	22mm		**119667**	1.6			
	24mm		**119608**	1.5	8 X 3.3mm	8 X 4mm	8 X 7mm
	25mm		**119609**	1.5			
	28mm		**119610**	1.5			
	30mm		**119611**	1.4			
	32mm		**119612**	1.4	10 X 3.3mm	10 X 5mm	10 X 8mm
	35mm		**119613**	1.3			
	38mm		**119614**	1.3			
	40mm		**119615**	1.2	12 X 3.3mm	12 X 5mm	12 X 8mm
	42mm		**119616**	1.1			
	45mm		**119617**	1	14 X 3.8mm	14 X 5.5mm	14 X 9mm
	48mm		**119668**	0.9			
2517	1/2”		**119100**	3.7	1/8 x 1/16	1/8 x 1/16	1/8 x 1/8
	5/8”		**119102**	3.6	3/16 x 3/32	3/16 x 3/32	3/16 x 3/16
	11/16”		**119103**	3.5			
	3/4”		**119104**	3.4			
	13/16”		**119105**	3.4			
	7/8”		**119106**	3.3			
	15/16”		**119107**	3.3	1/4 x 1/8	1/4 x 1/8	1/4 x 1/4
	1”		**119108**	3.3			
	1-1/16”		**119109**	3.2			
	1-1/8”		**119110**	3.2			
	1-3/16”		**119111**	3.2			
	1-1/4”		**119112**	3.2			
	1-5/16”		**119113**	3.1	5/16 x 5/32	5/16 x 5/32	5/16 x 5/16
	1-3/8”		**119114**	3.1			
	1-7/16”		**119115**	3	3/8 x 3/16	3/8 x 3/16	3/8 x 3/8
	1-1/2”		**119116**	2.9			
	1-9/16”		**119117**	2.9			
	1-5/8”	**119144**	**119118**	2.8			
	1-11/16”		**119119**	2.8			
	1-3/4”		**119120**	2.7			
	1-13/16”		**119121**	2.6	1/2 x 1/4	1/2 x 1/4	1/2 x 1/2
	1-7/8”		**119122**	2.5			
	1-15/16”		**117173**	2.4			
	2”	**119123**	**117174**	2.3			
	2-1/16”	**119124**	**119125**	2.3			
	2-1/8”		**117096**	2.2			
	2-3/16”		**117175**	2.1			
	2-1/4”		**117097**	2			
	2-5/16”		**119129**	1.9	5/8 x 3/16	5/8 x 5/16	5/8 x 1/2 Δ
	2-3/8”		**117098**	1.9			
	2-7/16” #		**117176**	1.8			
	2-1/2” #		**117099**	1.8			
	2-5/8” +		**117111**	1.8			
	2-11/16” +		**117115**	1.8			
	14mm		**119669**	3.6	5 x 2.3mm	5 x 5.3mm	5 x 5mm
	16mm		**119670**	3.6			
	18mm		**119671**	3.5	6 x 2.8mm	6 x 3.5mm	6 x 6mm
	19mm		**119672**	3.4			
	20mm		**119618**	3.4			
	22mm		**119619**	3.3			
	24mm		**119620**	3.3	8 X 3.3mm	8 X 4mm	8 X 7mm
	25mm		**119621**	3.2			
	28mm		**119622**	3.1			
	30mm		**119623**	3.1			

Specifications

Taper-Lock bushings – stock bore

TL bush size	Bore	P/N integral key	P/N keyway	Wt.	Bushing keyway	Shaft keyway ref	Key size ref
2517 (cont)	32mm		**119624**	3	10 X 3.3mm	10 X 5mm	10 X 8mm
	35mm		**119625**	2.9			
	38mm		**119626**	2.9			
	40mm		**119627**	2.8	12 X 3.3mm	12 X 5mm	12 X 8mm
	42mm		**119628**	2.6			
	45mm		**119629**	2.5	14 X 3.8mm	14 X 5.5mm	14 X 9mm
	48mm		**119630**	2.4			
	50mm		**119640**	2.3			
	55mm		**119641**	2	16 X 4.3mm	16 X 6mm	16 X 10mm
	60mm		**119642**	1.7	18 X 4.4mm	18 X 7mm	18 X 11mm
	65mm		**119643**	1.4			

TL bush size	Bore	P/N keyway	Wt.	Bushing keyway	Shaft keyway ref	Key size ref
2525	3/4”	119304	4.9	3/16 x 3/32	3/16 x 3/32	3/16 x 3/16
	7/8”	119306	4.8			
	15/16”	119307	4.8	1/4 x 1/8	1/4 x 1/8	1/4 x 1/4
	1”	119308	4.8			
	1-1/8”	119310	4.6			
	1-3/16”	119311	4.5			
	1-1/4”	119312	4.4			
	1-3/8”	119314	4.2	5/16 x 5/32	5/16 x 5/32	5/16 x 5/16
	1-7/16”	119315	4.2	3/8 x 3/16	3/8 x 3/16	3/8 x 3/8
	1-1/2”	119316	4			
	1-5/8”	119318	3.8			
	1-11/16”	119319	3.8			
	1-3/4”	119320	3.7			
	1-13/16”	119321	3.2	1/2 x 1/4	1/2 x 1/4	1/2 x 1/2
	1-7/8”	119322	3.4			
	1-15/16”	119323	3.2			
	2”	119324	3.1			
	2-1/8”	119326	2.9			
	2-3/16”	119327	2.5			
	2-1/4”	119328	2.3	5/8 x 3/16	5/8 x 5/16	5/8 x 1/2 Δ
	2-5/16”	119329	2			
	2-3/8”	119330	2			
	2-7/16”	119331	2			
	2-1/2”	119332	2			
3020	7/8”	117103	6.5	3/16 x 3/32	3/16 x 3/32	3/16 x 3/16
	15/16”	117101	6.5	1/4 x 1/8	1/4 x 1/8	1/4 x 1/4
	1”	117102	6.5			
	1-1/8”	117104	6.4			
	1-3/16”	117105	6.4			
	1-1/4”	117106	6.3			
	1-5/16”	117107	6.1	5/16 x 5/32	5/16 x 5/32	5/16 x 5/16
	1-3/8”	117108	6			
	1-7/16”	117109	6	3/8 x 3/16	3/8 x 3/16	3/8 x 3/8
	1-1/2”	117110	5.9			
	1-9/16”	117135	5.9			
	1-5/8”	117112	5.9			
	1-11/16”	117113	5.7			
	1-3/4”	117114	5.6			
	1-13/16”	117136	5.5	1/2 x 1/4	1/2 x 1/4	1/2 x 1/2
	1-7/8”	117116	5.4			
	1-15/16”	117117	5.3			
	2”	117118	5.2			
	2-1/16”	117119	5			
	2-1/8”	117120	5			
	2-3/16”	117121	4.9			
	2-1/4”	117122	4.8			

Δ Key furnished for these sizes ONLY
\+ These sizes are STEEL
\# Refer to torque capacity ratings on page 78.
If service factor of 2.0 or greater is required consult Baldor

TL bush size	Bore	P/N keyway	Wt.	Bushing keyway	Shaft keyway ref	Key size ref
3020 (cont)	2-5/16”	117137	4.6	5/8 x 5/16	5/8 x 5/16	5/8 x 5/8
	2-3/8”	117124	4.5			
	2-7/16”	117125	4.4			
	2-1/2”	117126	4.3			
	2-5/8”	117128	4			
	2-11/16”	117129	3.9			
	2-3/4”	117130	3.7			
	2-13/16”	117139	3.7	3/4 x 1/4	3/4 x 3/8	3/4 x 5/8 Δ
	2-7/8”	117132	3.6			
	2-15/16” #	117133	3.6			
	3” #	117134	3.4			
	3-1/8” +	117178	3.3			
	3-3/16” +	117179	3.3			
	3-1/4” +	117180	3.3			
	24mm	119673	6.5	8 X 3.3mm	8 X 4mm	8 X 7mm
	25mm	119674	6.5			
	28mm	119675	6.4			
	30mm	119676	6.4			
	32mm	119677	6.3	10 X 3.3mm	10 X 5mm	10 X 8mm
	35mm	119678	6			
	38mm	119679	5.9			
	40mm	119680	5.9	12 X 3.3mm	12 X 5mm	12 X 8mm
	42mm	119681	5.8			
	45mm	119682	5.6	14 X 3.8mm	14 X 5.5mm	14 X 9mm
	48mm	119644	5.5			
	50mm	119645	5.2			
	55mm	119646	5	16 X 4.3mm	16 X 6mm	16 X 10mm
	60mm	119647	4.9	18 X 4.4mm	18 X 7mm	18 X 11mm
	65mm	119648	4.3			
	70mm	119649	3.7	20 X 4.9mm	20 X 7.5mm	20 X 12mm
	75mm	119650	3.5			
	80mm +	117721	4	22 X 5.4mm	22 X 9mm	22 X 14mm
3030	15/16”	117004	10	1/4 x 1/8	1/4 x 1/8	1/4 x 1/4
	1”	117005	9.4			
	1-1/8”	117007	9.4			
	1-3/16”	117008	9.2			
	1-1/4”	117009	9			
	1-5/16”	117010	8.9	5/16 x 5/32	5/16 x 5/32	5/16 x 5/16
	1-3/8”	117011	8.8			
	1-7/16”	117012	8.6	3/8 x 3/16	3/8 x 3/16	3/8 x 3/8
	1-1/2”	117013	8.5			
	1-9/16”	117014	8.4			
	1-5/8”	117015	8.2			
	1-11/16”	117016	8			
	1-3/4”	117017	7.8			
	1-13/16”	117018	7.6	1/2 x 1/4	1/2 x 1/4	1/2 x 1/2
	1-7/8”	117019	7.5			
	1-15/16”	117020	7.4			
	2”	117021	7.3			
	2-1/16”	117022	7.2			
	2-1/8”	117023	7.1			
	2-3/16”	117024	6.9			
	2-1/4”	117025	6.7			
	2-5/16”	117026	6.6	5/8 x 5/16	5/8 x 5/16	5/8 x 5/8
	2-3/8”	117027	6.4			
	2-7/16”	117028	6.2			
	2-1/2”	117029	6.1			
	2-5/8”	117031	6			
	2-11/16”	117032	5.9			
	2-3/4”	117033	5.6			
	2-7/8”	117035	5.3	3/4 x 1/8	3/4 x 3/8	3/4 x 1/2 Δ
	2-15/16” #	117036	5			
	3” #	117037	4.9			
	3-1/8” +	117181	4.7			
	3-3/16” +	117182	4.7			
	3-1/4” +	117183	4.7	3/4 x 1/4	3/4 x 3/8	3/4 x 5/8 Δ
	28mm	119808	9.4	8 X 3.3mm	8 X 4mm	8 X 7mm
	32mm	119809	9	10 X 3.3mm	10 X 5mm	10 X 8mm
	38mm	119810	8.4			
	48mm	119811	7.6	14 X 3.8mm	14 X 5.5mm	14 X 9mm

Specifications

Taper-Lock bushings – stock bore

TL bush size	Bore	P/N keyway	Wt.	Bushing keyway	Shaft keyway ref	Key size ref
3030 (cont)	55mm	119812	6.9	16 X 4.3mm	16 X 6mm	16 X 10mm
	60mm	119813	6.4	18 X 4.4mm	18 X 7mm	18 X 11mm
	80mm +	119895	4	22 X 5.4mm	22 X 9mm	22 X 14mm
3525	1-3/16”	119702	16	1/4 x 1/8	1/4 x 1/8	1/4 x 1/4
	1-1/4”	119703	14.6			
	1-5/16”	119791	14.6	5/16 x 5/32	5/16 x 5/32	5/16 x 5/16
	1-3/8”	119704	14.3			
	1-7/16”	119734	14.2	3/8 x 3/16	3/8 x 3/16	3/8 x 3/8
	1-1/2”	119705	14			
	1-9/16”	119792	14			
	1-5/8”	119735	14			
	1-11/16”	119706	13.9			
	1-3/4”	119707	13.4			
	1-13/16”	119793	13.3	1/2 x 1/4	1/2 x 1/4	1/2 x 1/2
	1-7/8”	119708	13.2			
	1-15/16”	119709	13			
	2”	119710	13			
	2-1/8”	119711	12.6			
	2-3/16”	119712	12.4			
	2-1/4”	119713	12.3			
	2-5/16”	119736	12.2	5/8 x 5/16	5/8 x 5/16	5/8 x 5/8
	2-3/8”	119714	12			
	2-7/16”	119715	11.7			
	2-1/2”	119716	11.5			
	2-9/16”	119795	11.4			
	2-5/8”	119717	11.1			
	2-11/16”	119718	10.7			
	2-3/4”	119719	10.4			
	2-13/16”	119796	10.3	3/4 x 3/8	3/4 x 3/8	3/4 x 3/4
	2-7/8”	119720	10.1			
	2-15/16”	119721	10.5			
	3”	119722	9.5			
	3-1/16”	119797	9.4			
	3-1/8”	119723	9.3			
	3-3/16”	119724	8.6			
	3-1/4”	119725	8.8			
	3-5/16”	119737	8.6	7/8 x 1/8	7/8 x 7/16	7/8 x 9/16 Δ
	3-3/8”	119726	8.5	7/8 x 3/16	7/8 x 7/16	7/8 x 5/8 Δ
	3-7/16”	119727	8.2			
	3-1/2”	119728	8			
	3-9/16”	119798	8			
	3-5/8” #	119729	7.9			
	3-11/16” #	119730	7.9			
	3-3/4” #	119731	7.9			
	3-13/16” #	119799	7.9	1 x 1/4	1 x 1/2	1 x 3/4 Δ
	3-7/8” #	119732	7.9			
	3-15/16” #	119733	7.9			
3535	1-3/16”	117207	15.2	1/4 x 1/8	1/4 x 1/8	1/4 x 1/4
	1-1/4”	117208	14.9			
	1-3/8”	117209	14.8	5/16 x 5/32	5/16 x 5/32	5/16 x 5/16
	1-7/16”	117210	14.6	3/8 x 3/16	3/8 x 3/16	3/8 x 3/8
	1-1/2”	117211	14.4			
	1-5/8”	117212	14.1			
	1-11/16”	117213	14			
	1-3/4”	117214	14			
	1-7/8”	117215	13.6	1/2 x 1/4	1/2 x 1/4	1/2 x 1/2
	1-15/16”	117216	13.4			
	2”	117217	13.1			
	2-1/8”	117218	12.6			
	2-3/16”	117219	12.4			
	2-1/4”	117220	12.2			

TL bush size	Bore	P/N keyway	Wt.	Bushing keyway	Shaft keyway ref	Key size ref
3535 (cont)	2-5/16”	117237	12	5/8 x 5/16	5/8 x 5/16	5/8 x 5/8
	2-3/8”	117221	11.7			
	2-7/16”	117222	11.7			
	2-1/2”	117223	11			
	2-5/8”	117224	10.9			
	2-11/16”	117225	10.7			
	2-3/4”	117226	10			
	2-7/8”	117227	9.8	3/4 x 3/8	3/4 x 3/8	3/4 x 3/4
	2-15/16”	117228	9.7			
	3”	117229	9.2			
	3-1/8”	117230	9.2			
	3-3/16”	117231	8.8			
	3-1/4”	117232	8.7			
	3-5/16”	117236	8.6	7/8 x 1/8	7/8 x 7/16	7/8 x 9/16 Δ
	3-3/8”	117233	8.7	7/8 x 3/16	7/8 x 7/16	7/8 x 5/8 Δ
	3-7/16”	117234	8.3			
	3-1/2”	117235	8			
	3-5/8” #	117707	7.1	7/8 x 1/4	7/8 x 7/16	7/8 x 11/16 Δ
	3-11/16” #	117708	6.8	7/8 x 3/16	7/8 x 7/16	7/8 x 5/8 Δ
	3-3/4” #	117709	6.4			
	3-7/8” #	117710	6	1 x 1/4	1 x 1/2	1 x 3/4 Δ
	3-15/16” #	117703	5.6			
	32mm	119814	14.6	10 X 3.3mm	10 X 5mm	10 X 8mm
	38mm	119815	14			
	48mm	119816	13.2	14 X 3.8mm	14 X 5.5mm	14 X 9mm
	50mm	117738	13			
	55mm	119817	11.1	16 X 4.3mm	16 X 6mm	16 X 10mm
	60mm	119683	11.1	18 X 4.4mm	18 X 7mm	18 X 11mm
	65mm	117737	11			
	75mm	117722	10	20 X 4.9mm	20 X 7.5mm	20 X 12mm
	80mm	117297	10	22 X 5.4mm	22 X 9mm	22 X 14mm
	85mm	393170	10			
	90mm	426013	10	25 X 5.4mm	25 X 9mm	25 x 14mm
	95mm	426013	10			
4030	1-7/16”	119738	24	3/8 x 3/16	3/8 x 3/16	3/8 x 3/8
	1-1/2”	119739	22			
	1-9/16”	119770	21.9			
	1-5/8”	119740	21.8			
	1-11/16”	119771	21.5			
	1-3/4”	119772	21.2			
	1-13/16”	119773	21	1/2 x 1/4	1/2 x 1/4	1/2 x 1/2
	1-7/8”	119774	20.9			
	1-15/16”	119775	20.7			
	2”	119741	20.6			
	2-1/16”	119776	20.6			
	2-1/8”	119742	20.7			
	2-3/16”	119743	20.4			
	2-1/4”	119744	20.1			
	2-5/16”	119777	20	5/8 x 5/16	5/8 x 5/16	5/8 x 5/8
	2-3/8”	119745	19.5			
	2-7/16”	119746	19.3			
	2-1/2”	119778	19.2			
	2-9/16”	119779	19.1			
	2-5/8”	119747	19			
	2-11/16”	119780	18.4			
	2-3/4”	119748	17.7			
	2-13/16”	119781	17.5	3/4 x 3/8	3/4 x 3/8	3/4 x 3/4
	2-7/8”	119749	17.2			
	2-15/16”	119750	17.2			
	3”	119751	17			
	3-1/16”	119782	16.8			
	3-1/8”	119752	16.5			
	3-3/16”	119783	15.9			
	3-1/4”	119753	15.4			

Δ Key furnished for these sizes ONLY
\+ These sizes are STEEL
\# Refer to torque capacity ratings on page 78.
If service factor of 2.0 or greater is required consult Baldor

Specifications

Taper-Lock bushings – stock bore

TL bush size	Bore	P/N keyway	Wt.	Bushing keyway	Shaft keyway ref	Key size ref
4030 (cont)	3-5/16”	119784	14.9	7/8 x 7/16	7/8 x 7/16	7/8 x 7/8
	3-3/8”	119754	14.6			
	3-7/16”	119755	14.1			
	3-1/2”	119756	13.4			
	3-9/16”	119785	13.3			
	3-5/8”	119757	13.2			
	3-11/16”	119786	13			
	3-3/4”	119758	12.7	7/8 x 3/16	7/8 x 7/16	7/8 x 5/8 Δ
	3-13/16”	119787	12.7	1 x 1/2	1 x 1/2	1 x 1
	3-7/8”	119759	12.6	1 x 1/4	1 x 1/2	1 x 3/4 Δ
	3-15/16”	119760	12.6			
	4”	119761	12.6			
	4-1/8” #	119788	12.6			
	4-3/16” #	119762	12.6			
	4-1/4” #	119763	12.6			
	4-3/8” #	119764	12.6			
	4-7/16” #	119765	11.8			
4040	1-7/16”	117310	24	3/8 x 3/16	3/8 x 3/16	3/8 x 3/8
	1-1/2”	117311	22			
	1-5/8”	117312	22			
	1-11/16”	117313	21.9			
	1-3/4”	117314	21.9			
	1-7/8”	117315	21	1/2 x 1/4	1/2 x 1/4	1/2 x 1/2
	1-15/16”	117316	21.2			
	2”	117317	21.1			
	2-1/8”	117318	20.6			
	2-3/16”	117319	20.3			
	2-1/4”	117320	20.2			
	2-3/8”	117321	19.6	5/8 x 5/16	5/8 x 5/16	5/8 x 5/8
	2-7/16”	117322	19.3			
	2-1/2”	117323	18.8			
	2-5/8”	117324	18.7			
	2-11/16”	117325	18.3			
	2-3/4”	117326	18.2			
	2-13/16”	117267	17.8	3/4 x 3/8	3/4 x 3/8	3/4 x 3/4
	2-7/8”	117327	17.5			
	2-15/16”	117328	17.2			
	3”	117329	16.8			
	3-1/8”	117330	16.2			
	3-3/16”	117331	15.8			
	3-1/4”	117332	15.5			
	3-3/8”	117333	14.8	7/8 x 7/16	7/8 x 7/16	7/8 x 7/8
	3-7/16”	117334	14.4			
	3-1/2”	117335	14			
	3-5/8”	117337	13.5			
	3-11/16”	117340	13.5	7/8 x 3/16	7/8 x 7/16	7/8 x 5/8 Δ
	3-3/4”	117336	13.5			
	3-7/8”	117341	12.9	1 x 1/4	1 x 1/2	1 x 3/4 Δ
	3-15/16”	117338	12.5			
	4”	117352	12			
	4-1/8” #	117714	11.2			
	4-3/16” #	117715	10.7			
	4-1/4” #	117716	10.3			
	4-3/8” #	117717	9.5			
	4-7/16” #	117704	8.9			
	48mm	119818	21	14 X 3.8mm	14 X 5.5mm	14 X 9mm
	55mm	119819	20.4	16 X 4.3mm	16 X 6mm	16 X 10mm
	60mm	119820	19.5	18 X 4.4mm	18 X 7mm	18 X 11mm
	75mm	117723	10	20 X 4.9mm	20 X 7.5mm	20 X 12mm
	80mm	117724	10	22 X 5.4mm	22 X 9mm	22 X 14mm
	90mm	117726	10	25 X 5.4mm	25 X 9mm	25 x 14mm
	95mm	117725	10			
	100mm	117729	10	28 X 6.4mm	28 X 10mm	28 X 16mm

Δ Key furnished for these sizes ONLY
\+ These sizes are STEEL
\# Refer to torque capacity ratings on page 78.
If service factor of 2.0 or greater is required consult Baldor

TL bush size	Bore	P/N keyway	Wt.	Bushing keyway	Shaft keyway ref	Key size ref
4535	1-15/16”	114765	31	1/2 x 1/4	1/2 x 1/4	1/2 x 1/2
	2”	114766	29.7			
	2-1/16”	114767	29.5			
	2-1/8”	114768	29.3			
	2-3/16”	114769	29			
	2-1/4”	114770	28.8			
	2-5/16”	114771	28.6	5/8 x 5/16	5/8 x 5/16	5/8 x 5/8
	2-3/8”	114772	27.4			
	2-7/16”	114773	28			
	2-1/2”	114774	26.7			
	2-9/16”	114775	26.4			
	2-5/8”	114776	25.9			
	2-11/16”	114777	25.4			
	2-3/4”	114778	25			
	2-13/16”	114779	24.9	3/4 x 3/8	3/4 x 3/8	3/4 x 3/4
	2-7/8”	114780	24.8			
	2-15/16”	114781	24.2			
	3”	114782	24.2			
	3-1/16”	114783	24.2			
	3-1/8”	114784	24.1			
	3-3/16”	114785	23.8			
	3-1/4”	114786	23.1			
	3-5/16”	114787	22.7	7/8 x 7/16	7/8 x 7/16	7/8 x 7/8
	3-3/8”	114788	22.4			
	3-7/16”	114789	21.5			
	3-1/2”	114790	21.3			
	3-9/16”	114791	21.1			
	3-5/8”	114792	21			
	3-11/16”	114793	20.3			
	3-3/4”	114794	19.9			
	3-13/16”	114795	19.6	1 x 1/2	1 x 1/2	1 x 1
	3-7/8”	114796	19.3			
	3-15/16”	114797	18.9			
	4”	114798	18.7			
	4-1/8”	114799	18.6			
	4-3/16”	114800	18.5			
	4-1/4”	114801	17.8			
	4-3/8”	114802	16.8	1 x 1/4	1 x 1/2	1 x 3/4 Δ
	4-7/16”	114803	15.4			
	4-1/2”	114804	15.3			
	4-3/4” #	114805	15.2	1-1/4 x 1/4	1-1/4 x 5/8	1-1/4 x 7/8 Δ
	4-7/8” #	114806	15.1			
	4-15/16” #	114807	14.9			
4545	1-15/16”	117416	29.9	1/2 x 1/4	1/2 x 1/4	1/2 x 1/2
	2”	117417	29.8			
	2-1/8”	117849	29.8			
	2-3/16”	117419	29			
	2-3/8”	117421	28.2	5/8 x 5/16	5/8 x 5/16	5/8 x 5/8
	2-7/16”	117422	27.9			
	2-1/2”	117850	27.5			
	2-5/8”	117424	27			
	2-3/4”	117426	26.5			
	2-7/8”	117427	25.7	3/4 x 3/8	3/4 x 3/8	3/4 x 3/4
	2-15/16”	117428	25.3			
	3”	117429	25.2			
	3-1/8”	117430	24.3			
	3-3/16”	117431	24.2			
	3-1/4”	117432	23.9			
	3-3/8”	117433	22.8	7/8 x 7/16	7/8 x 7/16	7/8 x 7/8
	3-7/16”	117434	22.6			
	3-1/2”	117435	22.1			
	3-5/8”	117413	21.2			
	3-3/4”	117436	20.3			
	3-7/8”	117437	19.5	1 x 1/2	1 x 1/2	1 x 1
	3-15/16”	117438	19			
	4”	117439	18.6			
	4-1/8”	117444	17.5			
	4-3/16”	117443	17.1			
	4-1/4”	117441	17			
	4-3/8”	117442	16.9	1 x 1/4	1 x 1/2	1 x 3/4

Specifications

Taper-Lock bushings – stock bore

TL bush size	Bore	P/N keyway	Wt.	Bushing keyway	Shaft keyway ref	Key size ref
4545 (cont)	4-7/16”	117440	16.5	1 x 1/4	1 x 1/2	1 x 3/4 Δ
	4-1/2”	117447	15.9			
	4-3/4” #	117718	13.9	1-1/4 x 1/4	1-1/4 x 5/8	1-1/4 x 7/8 Δ
	4-7/8” #	117719	12.9			
	4-15/16” #	117705	12.5			
5040	2-7/16”	114865	39.5	5/8 x 5/16	5/8 x 5/16	5/8 x 5/8
	2-1/2”	114866	38.3			
	2-9/16”	114867	37.7			
	2-5/8”	114868	37.1			
	2-11/16”	114869	36.9			
	2-3/4”	114870	36.6			
	2-13/16”	114871	36.5	3/4 x 3/8	3/4 x 3/8	3/4 x 3/4
	2-7/8”	114872	36.4			
	2-15/16”	114873	36.2			
	3”	114874	35.6			
	3-1/16”	114875	35.2			
	3-1/8”	114876	34.8			
	3-3/16”	114877	33.9			
	3-1/4”	114878	33.2			
	3-5/16”	114879	33	7/8 x 7/16	7/8 x 7/16	7/8 x 7/8
	3-3/8”	114880	32.7			
	3-7/16”	114881	32			
	3-1/2”	114882	31.7			
	3-9/16”	114883	31.4			
	3-5/8”	114884	31.1			
	3-11/16”	114885	30.4			
	3-3/4”	114886	29.7			
	3-13/16”	114887	29.4	1 x 1/2	1 x 1/2	1 x 1
	3-7/8”	114888	29			
	3-15/16”	114889	28.7			
	4”	114890	27.8			
	4-1/8”	114891	27.5			
	4-3/16”	114892	27.2			
	4-1/4”	114893	27			
	4-3/8”	114894	26			
	4-7/16”	114895	25.1			
	4-1/2”	114896	23.6			
	4-3/4”	114897	22.9	1-1/4 x 1/4	1-1/4 x 5/8	1-1/4 x 7/8 Δ
	4-7/8”	114898	22.2			
	4-15/16”	114899	20.6			
	5”	114900	20.5			
5050	2-7/16”	117458	39	5/8 x 5/16	5/8 x 5/16	5/8 x 5/8
	2-11/16”	117450	37.4			
	2-15/16”	117459	36	3/4 x 3/8	3/4 x 3/8	3/4 x 3/4
	3-3/8”	117452	33	7/8 x 7/16	7/8 x 7/16	7/8 x 7/8
	3-7/16”	117460	32.6			
	3-5/8”	117453	31.2			
	3-7/8”	117454	29.3	1 x 1/2	1 x 1/2	1 x 1
	3-15/16”	117461	28.6			
	4”	117466	28.3			
	4-1/4”	117465	26.2			
	4-3/8”	117469	25			
	4-7/16”	117462	24.4			
	4-1/2”	117467	23.9			
	4-5/8”	117734	23	1-1/4 x 1/4	1-1/4 x 5/8	1-1/4 x 7/8 Δ
	4-7/8”	117468	22.3			
	4-15/16”	117463	21.4			
	5”	117464	20.9			
	110mm	117736	26.2	28 X 6.4mm	28 X 10mm	28 X 16mm
6050	4-7/16”	117474	63.6	1 x 1/2	1 x 1/2	1 x 1
	4-15/16”	117473	58.2	1-1/4 x 5/8	1-1/4 x 5/8	1-1/4 x 1-1/4
	5-7/16”	117475	52.3			
	5-15/16”	117476	57.2	1-1/2 x 3/4	1-1/2 x 3/4	1-1/2 x 1-1/2
	6”	117477	46.4			

TL bush size	Bore	P/N keyway	Wt.	Bushing keyway	Shaft keyway ref	Key size ref
7060	4-15/16”	117490	92	1-1/4 x 5/8	1-1/4 x 5/8	1-1/4 x 1-1/4
	5-7/16”	117491	84.5			
	5-15/16”	117492	78.2	1-1/2 x 3/4	1-1/2 x 3/4	1-1/2 x 1-1/2
	6”	117493	76.6			
	6-7/16”	117494	68.1			
	6-1/2”	117495	68.7			
	6-15/16”	117496	62.1	1-3/4 x 3/4	1-3/4 x 3/4	1-3/4 x 1-1/2
	7” #	117497	60.6			
8065	5-7/16”	117479	98.6	1-1/4 x 5/8	1-1/4 x 5/8	1-1/4 x 1-1/4
	5-15/16”	117480	105.7	1-1/2 x 3/4	1-1/2 x 3/4	1-1/2 x 1-1/2
	6-7/16”	117481	102.3			
	6-1/2”	117482	101.8			
	6-15/16”	117488	92	1-3/4 x 3/4	1-3/4 x 3/4	1-3/4 x 1-1/2
	7”	117483	91.1			
	7-1/2”	117503	89.9			
	8” #	117484	89.9	2 x 3/4	2 x 3/4	2 x 1-1/2
10085	7”	117486	245	1-3/4 x 3/4	1-3/4 x 3/4	1-3/4 x 1-1/2
	8”	117485	219	2 x 3/4	2 x 3/4	2 x 1-1/2
	8-1/4”	117411	210			
	9”	117487	190			
	10”	117510	157.5	2-1/2 x 7/8	2-1/2 x 7/8	2-1/2 x 1-3/4
120100	8”	117522	410	2 x 3/4	2 x 3/4	2 x 1-1/2
	8-1/2”	117523	395			
	9”	117520	380			
	9-1/2”	117524	365	2-1/2 x 7/8	2-1/2 x 7/8	2-1/2 x 1-3/4
	10”	117521	350			
	10-1/2”	117525	335			
	11”	117526	320			
	11-1/2”	117527	305	3 x 1	3 x 1	3 x 2
	12” #	117508	290			

Δ Key furnished for these sizes ONLY
\+ These sizes are STEEL
\# Refer to torque capacity ratings on page 78.
If service factor of 2.0 or greater is required consult Baldor

Specifications

Taper-Lock bushings – reborable

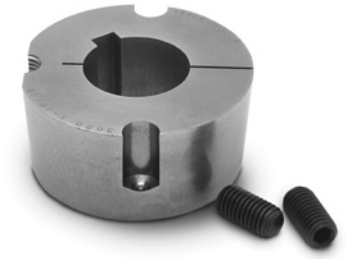

NOTE:
All reborable bushings are stocked without sawsplit to facilitate re-machining. Sawsplit must be made in bushing to allow it to compress for proper gripping of the shaft. Factory rebore and keyseat service as listed in MLP price book includes sawsplit

TL bush size	Sintered steel		Cast iron		Ductile iron		Steel		Stainless steel	
	Bore	P/N	Bore	P/N	Bore	P/N	Bore	P/N	Bore	P/N
1008	1/2"	**119187**					1/2"	**119432**	1/2"	**119410**
1108	1/2"	**119361**					1/2"	**119433**	1/2"	**119411**
1210	1/2"	**119206**					1/2"	**119434**	1/2"	**119412**
1215	1/2"	**119023**					1/2"	**119435**	1/2"	**119413**
1310	1/2"	**119386**					1/2"	**119436**	1/2"	**119414**
1610	1/2"	**119209**					1/2"	**119421**	1/2"	**119415**
1615	1/2"	**119067**					1/2"	**119437**	1/2"	**119416**
2012	1/2"	**119272**					1/2"	**119422**	1/2"	**119417**
2517	1/2"	**119141**					1"	**119423**	5/8"	**119418**
2525							1-7/16"	**119429**		
3020	7/8"	**117147**					1-7/16"	**119430**	7/8"	**119419**
3020	1-11/16"	**117149**								
3030			15/16"	**117045**			1-7/16"	**119431**		
3525			1-3/16"	**119700**	1-3/16"	**119701**				
3535			1-3/16"	**117250**	1-7/16"	**117205**				
4030			1-7/16"	**119789**	1-15/16"	**119790**				
4040			1-7/16"	**117345**	1-15/16"	**117307**				
4535			1-15/16"	**119766**	2-7/16"	**119767**				
4545			1-15/16"	**117448**	2-7/16"	**117414**				
5040			2-7/16"	**119768**	2-15/16"	**119769**				
5050			2-7/16"	**117451**	2-15/16"	**117455**				
6050			3-7/16"	**117472**	3-7/16"	**117471**				
7060			3-15/16"	**117498**	3-15/16"	**117505**				
8065			4-7/16"	**117502**	4-7/16"	**117506**				
10085			7"	**117489**						
120100			8"	**117504**						

Taper-Lock bushings – maximum bore capacities (inches)

TL bush size	Sintered steel			Cast iron			Ductile iron			Steel		
	Full key	Shallow key	No * key	Full key	Shallow key	No * key	Full key	Shallow key	No * key	Full key	Shallow key	No * key
1008	7/8"	1"	1"							7/8"	1"	1"
1108	1"	1-1/8"	1-1/8"							1"	1-1/8"	1-1/8"
1210	1-1/4"	1-1/4"	1-1/4"							1-1/4"	1-1/4"	1-1/4"
1215	1-1/4"	1-1/4"	1-1/4"							1-1/4"	1-1/4"	1-1/4"
1310	1-3/8"	1-3/8"	1-3/8"							1-3/8"	1-7/16"	1-7/16"
1610	1-1/2"	1-5/8"	1-5/8"							1-5/8"	1-11/16"	1-11/16"
1615	1-1/2"	1-5/8"	1-5/8"							1-5/8"	1-11/16"	1-11/16"
2012	1-7/8"	2"	2"							2"	2-1/8"	2-1/8"
2517	2-1/4"	2-1/2"	2-1/2"							2-7/16"	2-11/16"	2-11/16"
2525				2-1/4"	2-1/2"	2-1/2"				2-3/8"	2-11/16"	2-11/16"
3020	2-3/4"	3"	3"	2-3/4"	3"	3"				3"	3-1/4"	3-1/4"
3030				2-3/4"	3"	3"				3"	3-1/4"	3-1/4"
3525				3-1/4"	3-1/2"	3-1/2"	3-1/2"	3-15/16"	3-15/16"			
3535				3-1/4"	3-1/2"	3-1/2"	3-1/2"	3-15/16"	3-15/16"			
4030				3-5/8"	4"	4"	4"	4-7/16"	4-7/16"			
4040				3-5/8"	4"	4"	4"	4-7/16"	4-7/16"			
4535				4-1/2"	4-1/2"	4-1/2"	4-1/2"	4-15/16"	4-15/16"			
4545				4-1/2"	4-1/2"	4-1/2"	4-1/2"	4-15/16"	4-15/16"			
5040				4-1/2"	5"	5"	5"	5-5/16"	5-5/16"			
5050				4-1/2"	5"	5"	5"	5-5/16"	5-5/16"			
6050				6"	6"	6"	6"	6"	6"			
7060				7"	7"	7"	7"	7"	7"			
8065				8"	8"	8"	8"	8"	8"			
10085				10"	10"	10"	10"	10"	10"			
120100				12"	12"	12"	12"	12"	12"			

* Verify torque capacity: Contact Application Engineering for assistance.

Specifications

Taper-Lock bushings – reborable

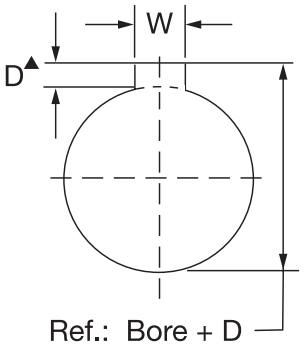

ISO standard method for measuring keyseat depth.

▲ Depth measured at centerline

Reference:

1 inch = 25.4 millimeters

1 millimeter =.03937 inches

Metric bore capacities – Taper-Lock bushings

TL bush size	Min bore	Sintered steel		Cast iron		Ductile iron		Steel	
		Full key	No* key	Full key	No* key	Full key	No* key	Full key	No* key
1008	13	22	25					22	26
1108	13	25	29					25	29
1210	13	32	32					32	32
1215	13	32	32					32	32
1310	13	35	35					35	36
1610	13	39	40					42	44
1615	13	39	40					42	44
2012	13	50	51					50	55
2517	13	60	64					65	68
2525	20			57	64			65	68
3020	24	75	76					80	82

TL bush size	Min bore	Sintered steel		Cast iron		Ductile iron		Steel	
		Full key	No* key	Full key	No* key	Full key	No* key	Full key	No* key
3030	24			75	76				
3535	31			83	89	91	100		
4040	37			95	102	100	113		
4545	50			110	114	115	125		
5050	61			120	127	127	134		
6050	88			152	152	152	152		
7060	100			177	177	177	177		
8065	117			203	203	203	203		
10085	178			254	254	254	254		
120100	204			304	304	304	304		

Note: ISO standard method for measuring keyseat depth
mm Bore and Keyway dimensions conform to ISO standard recommendation R773, for "Free" fit
* Verify torque capability. Contact Application Engineering for assistance.

Reference:
1 inch = 25.4 millimeters
1 millimeter =.03937 inches

Specifications

QD® bushings

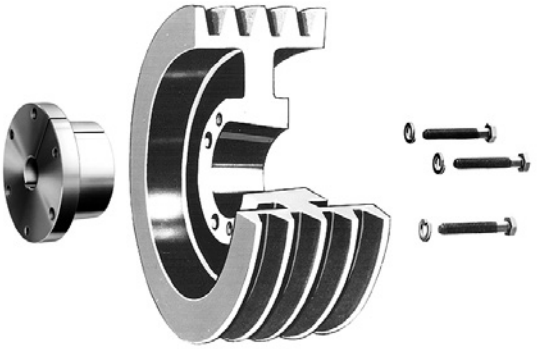

- 4 degree taper
- Easy on/easy off
- Manufactured precisely to industry standards
- Conventional or reverse mounting, including sizes M thru W – Dodge® exclusive!

QD is a registered trademark of Emerson Electric.

Conventional

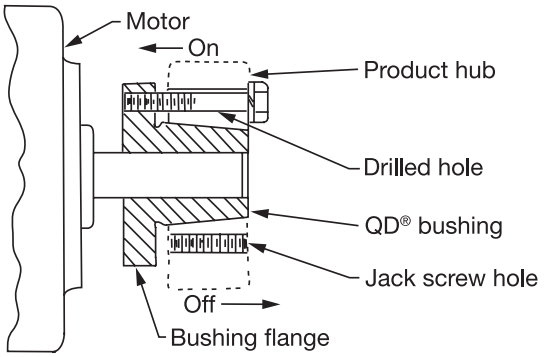

Reverse

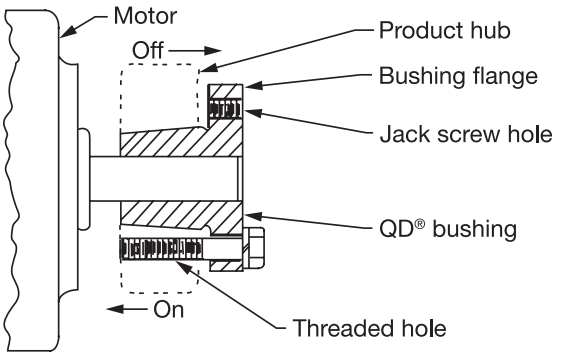

Conventional mounting

Easy on

- Place bushing in product
- Align clearance holes in product with threaded holes in bushing
- Install screws and lockwashers thru clearance holes, finger tight
- Slide assembly onto shaft, flange first
- Locate assembly on shaft for proper drive alignment
- Tighten cap screws alternately and evenly to specified torque

Easy off

- Remove cap screws and install in product threaded holes
- Alternately and evenly tighten screws until bushing grip is released
- Flanged design

Reverse mounting

Easy on

- Place bushing in product
- Align clearance holes in product with threaded holes in bushing
- Install screws and lockwashers thru clearance holes, finger tight
- Slide assembly onto shaft, flange outward
- Locate assembly on shaft for proper drive alignment
- Tighten cap screws alternately and evenly to specified torque

Easy off

- Remove cap screws and reinstall in flange threaded holes
- Alternately and evenly tighten screws until bushing grip is released

IMPORTANT! Do not use lubricants or anti-seize compounds on tapered bore or bushing surfaces.
Complete installation instructions are available at www.baldor.com.

Specifications

QD bushings – dimensions

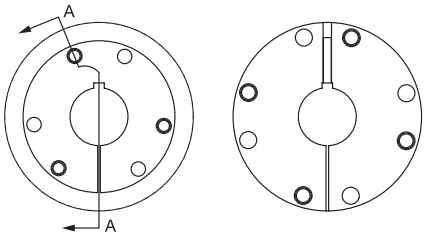

SIZE JA - J

SIZE M - W

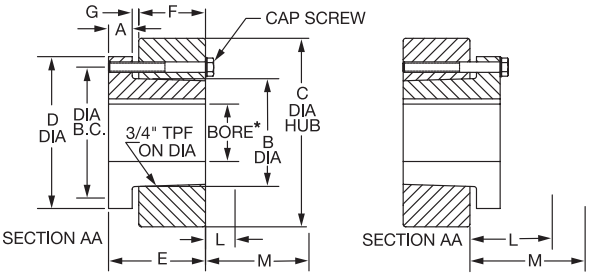

CONVENTIONAL MOUNTING

REVERSE MOUNTING

QD bushing ratings and dimensions

Bush. symbol	Ratings (lb-in) bushing torque cap.*	Bore Range Min.	Max. Bore for: Full kW	Shallow kW	No kW	Dimensions A	B dia.	C Hub Dia. CI 30 iron	Steel	D dia.	E	F	G
QT / (L)	1000	3/8	1-1/4	1-1/2	1-9/16	0.35	1.63	3.00	2.375	2.50	1.35	0.94	0.12
JA	1000	1/2	1	1-3/16	1-1/4	0.31	1.38	3.93	2.25	2.00	1.00	0.56	0.12
SH	3500	1/2	1-3/8	1-5/8	1-11/16	0.38	1.88	4.75	3.00	2.63	1.25	0.81	0.12
SDS	5000	1/2	1-5/8	1-15/16	2	0.43	2.18	4.75	3.50	3.18	1.31	0.75	0.12
SD	5000	1/2	1-5/8	1-15/16	2	0.43	2.18	3.81	3.50	3.18	1.81	1.25	0.12
SK	7000	1/2	2-1/8	2-1/2	2-5/8	0.50	2.81	4.75	4.50	3.88	1.88	1.25	0.22
SF	11000	1/2	2-5/16	2-15/16	...	0.50	3.13	6.38	5.50	4.63	2.00	1.25	0.22
E	20000	7/8	2-7/8	3-1/2	...	0.75	3.83	7.50	6.50	6.00	2.63	1.63	0.25
F	30000	1	3-1/4	3-15/16	4	0.81	4.43	7.75	7.25	6.63	3.63	2.50	0.34
J	45000	1-1/2	3-3/4	4-1/2	...	1.00	5.14	9.00	8.00	7.25	4.50	3.18	0.38
M	85000	2	4-3/4	5-1/2	...	1.25	6.50	11.38	10.00	9.00	6.75	5.18	0.41
N	150000	2-7/16	5	6	...	1.50	7.00	12.00	...	10.00	8.12	6.25	0.56
P	250000	2-15/16	5-15/16	7	...	1.75	8.25	14.00	...	11.75	9.38	7.25	0.63
W	375000	4	7-1/2	8-1/2	...	2.00	10.42	17.00	...	15.00	11.38	9.00	0.50
S	625000	5-1/2	9	10	...	3.25	12.13	19.00	...	17.75	15.75	12.00	0.75

* Torque ratings apply when bushing installation screws are tightened to listed torque.

Important: Do not over-torque screws. This can lead to hub damage

Installation information

Bush. symbol	Installation screws B. C. dia.	Qty.	Size	Screw torque (lb - in)	Required wrench clearance: Conventional mounting L-install #	L-install @	M-remove #	M-remove @	Reverse mounting L-install #	L-install @	M-remove #	M-remove @
QT / (L)	2	2	1/4-20 x 7/8	90	0.41	2.53	1.13	3.25	1.13	3.25	1.56	3.68
JA	1.65	3	10-24 x 1	60	0.41	2.53	1.13	3.25	1.13	3.25	1.56	3.68
SH	2.25	3	1/4-20x 1-3/8	108	0.54	2.61	1.51	3.58	1.51	3.58	2.08	4.13
SDS	2.69	3	1/4-20 x 1-3/8	108	0.59	2.66	1.56	3.63	1.56	3.63	2.13	4.18
SD	2.69	3	1/4-20 x 1-7/8	108	0.66	2.72	2.06	4.13	2.06	4.13	2.63	4.68
SK	3.31	3	5/16-18 x 2	180	0.72	2.66	2.19	4.19	2.25	4.25	2.32	4.94
SF	3.88	3	3/8-16 x 2	360	0.78	2.78	2.25	4.23	2.30	4.30	3.19	5.18
E	5.00	3	1/2 -13 x 2-3/4	720	1.12	3.06	3.00	4.93	3.05	5.00	4.30	6.25
F	5.63	3	9/16-12 x 3-5/8	900	1.09	2.91	3.94	5.75	3.99	5.81	5.31	7.12
J	6.25	3	5/8-11 x 4-1/2	1620	1.28	3.09	4.81	6.62	3.80	5.62	5.37	7.18
M	7.88	4	3/4-10 x 6-3/4	2700	2.16	4.03	7.69	9.56	...	...	...	...
N	8.50	4	7/8-9 x 8	3600	2.28	...	9.25	...	...	...	...	...
P	10.00	4	1-8 x 9-1/2	5400	3.13	...	10.88	...	...	...	...	...
W	12.75	4	1-1/8-7 x 11-1/2	7200	3.88	...	13.38	...	...	...	...	...
S	15.00	5	1-1/4 -7x 15	9000	3.75	...	16.50	...	...	...	...	...

Using Open-End Wrench
@ Using Socket Wrench

Note: Installation and maintenance instructions for Dodge products available at www.baldor.com

Specifications

QD bushings – stock bore

QD bush size	Bore	P/N keyway	Wt.	Bushing keyway	Shaft keyway ref	Key size ref
QT / (L)	3/8”	**121129**	0.85	None		
	7/16”	**121130**	0.82			
	1/2”	**121131**	0.81	1/8 x 1/16	1/8 x 1/16	1/8 x 1/8
	9/16”	**121133**	0.80			
	5/8”	**122050**	0.78	3/16 x 3/32	3/16 x 3/32	3/16 x 3/16
	11/16”	**121134**	0.76			
	3/4”	**121162 +**	0.74			
	3/4”	**122051**	0.74			
	13/16”	**121136**	0.70			
	7/8”	**121163 +**	0.68			
	7/8”	**122052**	0.68			
	15/16”	**121138**	0.66	1/4 x 1/8	1/4 x 1/8	1/4 x 1/4
	1”	**121164 +**	0.62			
	1”	**122053**	0.62			
	1-1/16”	**121140**	0.59			
	1-1/8”	**121186 +**	0.56			
	1-1/8”	**122054**	0.56			
	1-3/16”	**121187 +**	0.52			
	1-3/16”	**122055**	0.52			
	1-1/4”	**122056**	0.49			
	1-5/16”	**121144**	0.44	5/16 x 1/16	5/16 x 5/32	5/16 x 7/32 *
	1-3/8”	**121145**	0.43			
	1-7/16”	**121146**	0.38	3/8 x 1/16	3/8 x 3/16	3/8 x 1/4 *
	1-1/2”	**121147**	0.34			
	14mm	**121148**	0.79	5 x 2.3mm	5 x 3mm	5 x 5mm
	19mm	**121149**	0.74	6 x 2.8mm	6 x 3.5mm	6 x 6mm
	20mm	**121467**	0.73			
	25mm	**121151**	0.63	8 X 3.3mm	8 X 4mm	8 X 7mm
	28mm	**151152**	0.57			
	30mm	**121153**	0.53			
	32mm	**121154**	0.50	10 x 3.3mm	10 X 5mm	10 X 8mm

QD bush size	Bore	P/N keyway	Wt.	Bushing keyway	Shaft keyway ref	Key size ref
JA	1/2”	**120332**	0.46	1/8 x 1/16	1/8 x 1/16	1/8 x 1/8
	9/16”	**120333**	0.46			
	5/8”	**120334**	0.45	3/16 x 3/32	3/16 x 3/32	3/16 x 3/16
	11/16”	**120335**	0.43			
	3/4”	**120336**	0.41			
	13/16”	**120337**	0.40			
	7/8”	**120338**	0.37			
	15/16”	**120339**	0.35	1/4 x 1/8	1/4 x 1/8	1/4 x 1/4
	1”	**120340**	0.33			
	1-1/16”	**120341**	0.34	1/4 x 1/16	1/4 x 1/8	1/4 x 3/16 *
	1-1/8”	**120342**	0.31			
	1-3/16”	**120343**	0.29			
	1-1/4”	**120344**	0.25	None		
	19mm	**117049**	0.42	6 x 2.8mm	6 x 3.5mm	6 x 6mm
	20mm	**120329**	0.41			
	22mm	**117043**	0.40			
SH	1/2”	**120345**	1.16	1/8 x 1/16	1/8 x 1/16	1/8 x 1/8
	9/16”	**120346**	1.14			
	5/8”	**120347**	1.14	3/16 x 3/32	3/16 x 3/32	3/16 x 3/16
	11/16”	**120348**	1.14			
	3/4”	**120349**	1.10			
	13/16”	**120350**	1.07			
	7/8”	**120351**	1.04			
	15/16”	**120352**	1.00	1/4 x 1/8	1/4 x 1/8	1/4 x 1/4
	1”	**120353**	0.98			
	1-1/16”	**120354**	0.94			
	1-1/8”	**120355**	0.91			
	1-3/16”	**120356**	0.88			
	1-1/4”	**120357**	0.84			
	1-5/16”	**120358**	0.82	5/16 x 5/32	5/16 x 5/32	5/16 x 5/16
	1-3/8”	**120359**	0.80			
	1-7/16”	**120360**	0.79	3/8 x 1/16	3/8 x 3/16	3/8 x 1/4 *
	1-1/2”	**120361**	0.75			
	1-9/16”	**120362**	0.90			
	1-5/8”	**120363**	0.64			
	1-11/16”	**120580**	0.55	None		
	24mm	**120088**	1.00	8 X 3.3mm	8 X 4mm	8 X 7mm
	25mm	**120089**	0.99			
	28mm	**120090**	0.93			
	30mm	**120091**	0.87			
	32mm	**120092**	0.82	10 X 3.3mm	10 X 5mm	10 X 8mm
	35mm	**120093**	0.74			
SDS	1/2”	**120388**	1.65	1/8 x 1/16	1/8 x 1/16	1/8 x 1/8
	9/16”	**120389**	1.65			
	5/8”	**120390**	1.61	3/16 x 3/32	3/16 x 3/32	3/16 x 3/16
	11/16”	**120391**	1.60			
	3/4”	**120392**	1.58			
	13/16”	**120393**	1.54			
	7/8”	**120394**	1.54			
	15/16”	**120395**	1.50	1/4 x 1/8	1/4 x 1/8	1/4 x 1/4
	1”	**120396**	1.46			
	1-1/16”	**120397**	1.43			
	1-1/8”	**120398**	1.38			
	1-3/16”	**120399**	1.36			
	1-1/4”	**120400**	1.32			
	1-5/16”	**120401**	1.26	5/16 x 5/32	5/16 x 5/32	5/16 x 5/16
	1-3/8”	**120402**	1.24			

P/N’s marked (+) are Integral Key Bushings
Bore sizes marked (#) will be supplied with 1/2” wide keyway unless the 5/8” wide keyway is specified when ordering
* Key furnished for these sizes ONLY
** Key not furnished for mm bores sizes

Specifications

QD bushings – stock bore

QD bush size	Bore	P/N keyway	Wt.	Bushing keyway	Shaft keyway ref	Key size ref
SDS (cont)	1-7/16”	**120403**	1.19	3/8 x 3/16	3/8 x 3/16	3/8 x 3/8
	1-1/2”	**120404**	1.15			
	1-9/16”	**120405**	1.11			
	1-5/8”	**120406**	1.08			
	1-11/16”	**120407**	1.08	3/8 x 1/8	3/8 x 3/16	3/8 x 5/16 *
	1-3/4”	**120408**	1.02			
	1-13/16”	**120409**	0.98	1/2 x 1/16	1/2 x 1/4	1/2 x 5/16 *
	1-7/8”	**120410**	0.92			
	1-15/16”	**120411**	0.87			
	2”	**120412**	0.77	None		
	24mm	**120094**	1.47	8 X 3.3mm	8 X 4mm	8 X 7mm
	25mm	**120095**	1.47			
	28mm	**120096**	1.41			
	30mm	**120097**	1.36			
	32mm	**120098**	1.31	10 X 3.3mm	10 X 5mm	10 X 8mm
	35mm	**120099**	1.22			
	38mm	**120100**	1.00			
	40mm	**120101**	1.01	12 X 3.3mm	12 X 5mm	12 X 8mm
	42mm	**120102**	1.02			
SD	1/2”	**120364**	2.07	1/8 x 1/16	1/8 x 1/16	1/8 x 1/8
	9/16”	**120365**	2.05			
	5/8”	**120366**	2.03	3/16 x 3/32	3/16 x 3/32	3/16 x 3/16
	11/16”	**120367**	2.00			
	3/4”	**120368**	2.00			
	13/16”	**120369**	2.00			
	7/8”	**120370**	1.88			
	15/16”	**120371**	1.85	1/4 x 1/8	1/4 x 1/8	1/4 x 1/4
	1”	**120372**	1.80			
	1-1/16”	**120373**	1.79			
	1-1/8”	**120374**	1.72			
	1-3/16”	**120375**	1.67			
	1-1/4”	**120376**	1.62			
	1-5/16”	**120377**	1.55	5/16 x 5/32	5/16 x 5/32	5/16 x 5/16
	1-3/8”	**120378**	1.50			
	1-7/16”	**120379**	1.44	3/8 x 3/16	3/8 x 3/16	3/8 x 3/8
	1-1/2”	**120380**	1.36			
	1-9/16”	**120381**	1.29			
	1-5/8”	**120382**	1.29			
	1-11/16”	**120383**	1.20			
	1-3/4”	**120384**	1.19	3/8 x 1/8	3/8 x 3/16	3/8 x 5/16 *
	1-13/16”	**120385**	1.15	1/2 x 1/16	1/2 x 1/4	1/2 x 5/16 *
	1-7/8”	**120386**	1.07			
	1-15/16”	**120387**	1.00			
	2”	**120581**	0.84	None		
	24mm	**120103**	1.84	8 X 3.3mm	8 X 4mm	8 X 7mm
	25mm	**120104**	1.82			
	28mm	**120105**	1.72			
	30mm	**120106**	1.66			
	32mm	**120107**	1.58	10 X 3.3mm	10 X 5mm	10 X 8mm
	35mm	**120108**	1.49			
	38mm	**120109**	1.37			
	40mm	**120110**	1.28	12 X 3.3mm	12 X 5mm	12 X 8mm
	42mm	**120111**	1.18			

QD bush size	Bore	P/N keyway	Wt.	Bushing keyway	Shaft keyway ref	Key size ref
SK	1/2”	**120413**	3.77	1/8 x 1/16	1/8 x 1/16	1/8 x 1/8
	9/16”	**120414**	3.74			
	5/8”	**120415**	3.72			
	11/16”	**120416**	3.70			
	3/4”	**120417**	3.61	3/16 x 3/32	3/16 x 3/32	3/16 x 3/16
	13/16”	**120418**	3.53			
	7/8”	**120419**	3.58			
	15/16”	**120420**	3.52	1/4 x 1/8	1/4 x 1/8	1/4 x 1/4
	1”	**120421**	3.45			
	1-1/16”	**120422**	3.41			
	1-1/8”	**120423**	3.37			
	1-3/16”	**120424**	3.31			
	1-1/4”	**120425**	3.31			
	1-5/16”	**120426**	3.18	5/16 x 5/32	5/16 x 5/32	5/16 x 5/16
	1-3/8”	**120427**	3.12			
	1-7/16”	**120428**	3.08	3/8 x 3/16	3/8 x 3/16	3/8 x 3/8
	1-1/2”	**120429**	3.00			
	1-9/16”	**120430**	2.95			
	1-5/8”	**120431**	2.86			
	1-11/16”	**120432**	2.79			
	1-3/4”	**120433**	2.88			
	1-13/16”	**120434**	2.62	1/2 x 1/4	1/2 x 1/4	1/2 x 1/2
	1-7/8”	**120435**	2.50			
	1-15/16”	**120436**	2.42			
	2”	**120437**	2.32			
	2-1/16”	**120438**	2.26			
	2-1/8”	**120439**	2.17			
	2-3/16”	**120440**	2.21	1/2 x 3/16	1/2 x 1/4	1/2 x 7/16 *
	2-1/4”	**120441**	2.09			
	2-5/16”	**120442**	2.00	5/8 x 1/16	5/8 x 5/16	5/8 x 3/8 *
	2-3/8”	**120443**	1.91			
	2-7/16”	**120444**	1.81			
	2-1/2”	**120445**	1.72			
	2-5/8”	**120447**	1.32	None		
	24mm	**120112**	3.52	8 X 3.3mm	8 X 4mm	8 X 7mm
	25mm	**120113**	3.50			
	28mm	**120114**	3.41			
	30mm	**120115**	3.31			
	32mm	**120116**	3.31	10 X 3.3mm	10 X 5mm	10 X 8mm
	35mm	**120117**	3.12			
	38mm	**120118**	2.98			
	40mm	**120119**	2.95	12 X 3.3mm	12 X 5mm	12 X 8mm
	42mm	**120120**	2.86			
	45mm	**120070**	2.69	14 X 3.8mm	14 X 5.5mm	14 X 9mm
	48mm	**120121**	2.50			
	50mm	**120122**	2.40			
	55mm	**120123**	2.17	16 X 4.3mm	16 X 6mm	16 X 10mm
SF	1/2”	**120448**	5.27	1/8 x 1/4	1/8 x 1/4	1/8 x 1/8
	9/16”	**120449**	5.27			
	5/8”	**120450**	5.22	3/16 x 3/32	3/16 x 3/32	3/16 x 3/16
	11/16”	**120451**	5.20			
	3/4”	**120452**	5.17			
	13/16”	**120453**	5.32			
	7/8”	**120454**	5.08			
	15/16”	**120455**	5.05	1/4 x 1/8	1/4 x 1/8	1/4 x 1/4
	1”	**120456**	5.00			
	1-1/16”	**120457**	4.95			
	1-1/8”	**120458**	4.90			
	1-3/16”	**120459**	4.83			
	1-1/4”	**120460**	4.77			

P/N's marked (+) are Integral Key Bushings
Bore sizes marked (#) will be supplied with 1/2” wide keyway unless the 5/8” wide keyway is specified when ordering
* Key furnished for these sizes ONLY
** Key not furnished for mm bores sizes

Specifications

QD bushings – stock bore

QD bush size	Bore	P/N keyway	Wt.	Bushing keyway	Shaft keyway ref	Key size ref
SF (cont)	1-5/16”	**120461**	4.71	5/16 x 5/32	5/16 x 5/32	5/16 x 5/16
	1-3/8”	**120462**	4.61			
	1-7/16”	**120463**	4.57	3/8 x 3/16	3/8 x 3/16	3/8 x 3/8
	1-1/2”	**120464**	4.48			
	1-9/16”	**120465**	4.42			
	1-5/8”	**120466**	4.32			
	1-11/16”	**120467**	4.31			
	1-3/4”	**120468**	4.16			
	1-13/16”	**120469**	4.06	1/2 x 1/4	1/2 x 1/4	1/2 x 1/2
	1-7/8”	**120470**	4.00			
	1-15/16”	**120471**	3.87			
	2”	**120472**	3.78			
	2-1/16”	**120473**	3.70			
	2-1/8”	**120474**	3.57			
	2-3/16”	**120475**	3.45			
	2-1/4”	**120476**	3.38			
	2-5/16”	**120477**	3.32	5/8 x 5/16	5/8 x 5/16	5/8 x 5/8
	2-3/8”	**120478**	3.39	5/8 x 3/16	5/8 x 5/16	5/8 x 1/2 *
	2-7/16”	**120479**	3.26			
	2-1/2”	**120592**	3.16			
	2-5/8”	**120482**	2.91	5/8 x 1/16	5/8 x 5/16	5/8 x 3/8 *
	2-11/16”	**120483**	2.80			
	2-3/4”	**120484**	2.59			
	2-13/16”	**120485**	2.50	3/4 x 1/16	3/4 x 3/8	3/4 x 7/16 *
	2-7/8”	**120486**	2.35	3/4 x 1/32	3/4 x 3/8	3/4 x 13/32 *
	2-15/16”	**120487**	2.22			
	28mm	**120124**	5.00	8 X 3.3mm	8 X 4mm	8 X 7mm
	30mm	**120125**	4.90			
	32mm	**120126**	4.77	10 X 3.3mm	10 X 5mm	10 X 8mm
	35mm	**120127**	4.61			
	38mm	**120128**	4.48			
	40mm	**120129**	4.42	12 X 3.3mm	12 X 5mm	12 X 8mm
	42mm	**120130**	4.32			
	45mm	**120071**	4.16	14 X 3.8mm	14 X 5.5mm	14 X 9mm
	48mm	**120131**	4.00			
	50mm	**120132**	3.87			
	55mm	**120133**	3.57	16 X 4.3mm	16 X 6mm	16 X 10mm
	60mm	**120134**	3.39	18 X 4.4mm	18 X 7mm	18 X 11mm
E	7/8”	**120488**	11.80	3/16 x 3/32	3/16 x 3/32	3/16 x 3/16
	1”	**120490**	11.65	1/4 x 1/8	1/4 x 1/8	1/4 x 1/4
	1-1/8”	**120492**	11.46			
	1-3/16”	**120493**	11.40			
	1-1/4”	**120494**	11.33			
	1-5/16”	**120495**	11.26	5/16 x 5/32	5/16 x 5/32	5/16 x 5/16
	1-3/8”	**120496**	11.20			
	1-7/16”	**120497**	11.13	3/8 x 3/16	3/8 x 3/16	3/8 x 3/8
	1-1/2”	**120498**	10.86			
	1-9/16”	**120499**	10.82			
	1-5/8”	**120500**	10.69			
	1-11/16”	**120501**	10.56			
	1-3/4”	**120502**	10.46			

QD bush size	Bore	P/N keyway	Wt.	Bushing keyway	Shaft keyway ref	Key size ref
E (cont)	1-13/16”	**120503**	10.16	1/2 x 1/4	1/2 x 1/4	1/2 x 1/2
	1-7/8”	**120504**	10.16			
	1-15/16”	**120505**	10.16			
	2”	**120506**	10.01			
	2-1/16”	**120507**	9.85			
	2-1/8”	**120508**	9.73			
	2-3/16”	**120509**	9.42			
	2-1/4”	**120510**	9.42			
	2-5/16”	**120511**	9.07	5/8 x 5/16	5/8 x 5/16	5/8 x 5/8
	2-3/8”	**120512**	8.95			
	2-7/16”	**120513**	8.77			
	2-1/2”	**120514**	8.72			
	2-5/8”	**120516**	8.37			
	2-11/16”	**120517**	8.05			
	2-3/4”	**120518**	7.90			
	2-13/16”	**120519**	7.70	3/4 x 3/8	3/4 x 3/8	3/4 x 3/4
	2-7/8”	**120520**	7.32			
	2-15/16”	**120521**	7.53	3/4 x 1/8	3/4 x 3/8	3/4 x 1/2 *
	3”	**120522**	7.31			
	3-1/8”	**120524**	6.90			
	3-3/16”	**120525**	6.69			
	3-1/4”	**120526**	6.48			
	3-5/16”	**120527**	6.10	7/8 x 1/8	7/8 x 7/16	7/8 x 9/16 *
	3-3/8”	**120528**	6.21	7/8 x 1/16	7/8 x 7/16	7/8 x 1/2 *
	3-7/16”	**120529**	5.86			
	3-1/2”	**120530**	5.73			
	28mm	**120073**	10.20	8 X 3.3mm	8 X 4mm	8 X 7mm
	30mm	**120074**	10.20			
	32mm	**120075**	10.20	10 X 3.3mm	10 X 5mm	10 X 8mm
	35mm	**120135**	10.20			
	38mm	**120136**	10.00			
	40mm	**120137**	10.88	12 X 3.3mm	12 X 5mm	12 X 8mm
	42mm	**120138**	9.80			
	45mm	**120141**	9.60	14 X 3.8mm	14 X 5.5mm	14 X 9mm
	48mm	**120139**	10.26			
	50mm	**120140**	10.06			
	55mm	**120142**	9.56	16 X 4.3mm	16 X 6mm	16 X 10mm
	60mm	**120143**	9.10	18 X 4.4mm	18 X 7mm	18 X 11mm
	65mm	**120144**	9.60			
	70mm	**120145**	7.87	20 X 4.9mm	20 x 7.5mm	20 X 12mm
	75mm	**120146**	7.28			
F	1”	**120531**	19.41	1/4 x 1/8	1/4 x 1/8	1/4 x 1/4
	1-1/8”	**120533**	19.15			
	1-3/16”	**120534**	18.00			
	1-1/4”	**120535**	18.99			
	1-3/8”	**120537**	18.68	5/16 x 5/32	5/16 x 5/32	5/16 x 5/16
	1-7/16”	**120538**	18.56	3/8 x 3/16	3/8 x 3/16	3/8 x 3/8
	1-1/2”	**120539**	18.48			
	1-9/16”	**120540**	18.40			
	1-5/8”	**120541**	18.15			
	1-11/16”	**120542**	17.91			
	1-3/4”	**120543**	16.77			
	1-13/16”	**120544**	17.62	1/2 x 1/4	1/2 x 1/4	1/2 x 1/2
	1-7/8”	**120545**	16.41			
	1-15/16”	**120546**	16.00			
	2”	**120547**	16.00			
	2-1/16”	**120548**	16.00			
	2-1/8”	**120549**	15.95			
	2-3/16”	**120550**	15.95			
	2-1/4”	**120551**	15.95			

P/N’s marked (+) are Integral Key Bushings
Bore sizes marked (#) will be supplied with 1/2” wide keyway unless the 5/8” wide keyway is specified when ordering
* Key furnished for these sizes ONLY
** Key not furnished for mm bores sizes

Specifications

QD bushings – stock bore

QD bush size	Bore	P/N keyway	Wt.	Bushing keyway	Shaft keyway ref	Key size ref
F (cont)	2-5/16”	**120552**	15.95	5/8 x 5/16	5/8 x 5/16	5/8 x 5/8
	2-3/8”	**120553**	15.50			
	2-7/16”	**120554**	15.50			
	2-1/2”	**120555**	15.37			
	2-5/8”	**120557**	14.86			
	2-11/16”	**120558**	14.50			
	2-3/4”	**120559**	14.37			
	2-13/16”	**120560**	14.00	3/4 x 3/8	3/4 x 3/8	3/4 x 3/4
	2-7/8”	**120561**	14.02			
	2-15/16”	**120562**	13.47			
	3”	**120563**	13.20			
	3-1/8”	**120565**	12.67			
	3-3/16”	**120566**	12.50			
	3-1/4”	**120567**	12.00			
	3-3/8”	**120569**	12.00	7/8 x 3/16	7/8 x 7/16	7/8 x 5/8 *
	3-7/16”	**120570**	11.88			
	3-1/2”	**120571**	11.40			
	3-5/8”	**120573**	10.53			
	3-11/16”	**120574**	14.00			
	3-3/4”	**120575**	9.89			
	3-7/8”	**120577**	9.26	1 x 1/8	1 x 1/2	1 x 5/8 *
	3-15/16”	**120578**	9.23			
	4”	**120579**	7.96	None		
	45mm	**120076**	16.20	14 X 3.8mm	14 X 5.5mm	14 X 9mm
	48mm	**120147**	16.00			
	50mm	**120148**	15.80			
	55mm	**120149**	15.80	16 X 4.3mm	16 X 6mm	16 X 10mm
	60mm	**120150**	15.80	18 X 4.4mm	18 X 7mm	18 X 11mm
	65mm	**120151**	14.30			
	70mm	**120152**	14.30	20 X 4.9mm	20 x 7.5mm	20 X 12mm
	75mm	**120153**	13.50			
	80mm	**120154**	12.55	22 X 5.4mm	22 X 9mm	22 X 14mm
	85mm	**120155**	10.60			
	90mm	**120077**	10.50	25 X 5.4mm	25 X 9mm	25 X 14mm
J	1-1/2”	**120600**	28.97	3/8 x 3/16	3/8 x 3/16	3/8 x 3/8
	1-5/8”	**120601**	28.61			
	1-3/4”	**120603**	28.28			
	1-7/8”	**120604**	27.79	1/2 x 1/4	1/2 x 1/4	1/2 x 1/2
	1-15/16”	**120605**	27.53			
	2”	**120606**	27.33			
	2-1/8”	**120607**	26.74			
	2-3/16”	**120608**	26.37			
	2-1/4”	**120609**	26.32			
	2-3/8”	**120610**	25.65	5/8 x 5/16	5/8 x 5/16	5/8 x 5/8
	2-7/16”	**120611**	25.52			
	2-1/2”	**120612**	25.05			
	2-5/8”	**120613**	24.50			
	2-11/16”	**120614**	24.18			
	2-3/4”	**120615**	23.86			

QD bush size	Bore	P/N keyway	Wt.	Bushing keyway	Shaft keyway ref	Key size ref
J (cont)	2-7/8”	**120617**	23.15	3/4 x 3/8	3/4 x 3/8	3/4 x 3/4
	2-15/16”	**120618**	23.07			
	3”	**120619**	22.43			
	3-1/8”	**120620**	21.68			
	3-3/16”	**120621**	21.35			
	3-1/4”	**120622**	20.98			
	3-3/8”	**120623**	20.33	7/8 x 7/16	7/8 x 7/16	7/8 x 7/8
	3-7/16”	**120624**	21.13			
	3-1/2”	**120625**	19.58			
	3-5/8”	**120626**	18.44			
	3-11/16”	**120627**	18.04			
	3-3/4”	**120628**	17.62			
	3-7/8”	**120629**	17.94	1 x 1/8	1 x 1/2	1 x 5/8 *
	3-15/16”	**120630**	17.38			
	4”	**120631**	16.62			
	4-1/8”	**120632**	15.69			
	4-3/16”	**120633**	14.55			
	4-1/4”	**120634**	14.68			
	4-3/8”	**120635**	14.00			
	4-7/16”	**120636**	13.49			
	4-1/2”	**120637**	12.67			
	50mm	**120157**	26.50	14 X 3.8mm	14 X 5.5mm	14 X 9mm
	55mm	**120158**	25.60	16 X 4.3mm	16 X 6mm	16 X 10mm
	60mm	**120159**	25.82	18 X 4.4mm	18 X 7mm	18 X 11mm
	65mm	**120160**	25.25			
	70mm	**120161**	24.04	20 X 4.9mm	20 x 7.5mm	20 X 12mm
	75mm	**120162**	21.90			
	80mm	**120163**	20.90	22 X 5.4mm	22 X 9mm	22 X 14mm
	85mm	**120164**	20.52			
	90mm	**120165**	18.10	25 X 5.4mm	25 X 9mm	25 X 14mm
	95mm	**120166**	16.80			
	100mm	**120167**	16.50	26 X 6.4mm	28 X 10mm	28 X 16mm
M	2”	**119900**	62.65	1/2 x 1/4	1/2 x 1/4	1/2 x 1/2
	2-1/8”	**119901**	62.65			
	2-3/16”	**119902**	61.58			
	2-1/4”	**119903**	61.14			
	2-3/8”	**119904**	59.50	5/8 x 5/16	5/8 x 5/16	5/8 x 5/8
	2-7/16”	**119905**	59.35			
	2-1/2”	**119906**	59.21			
	2-5/8”	**119907**	58.69			
	2-3/4”	**119908**	57.86			
	2-7/8”	**119909**	56.57	3/4 x 3/8	3/4 x 3/8	3/4 x 3/4
	2-15/16”	**119910**	56.17			
	3”	**119911**	56.10			
	3-1/8”	**119912**	55.82			
	3-3/16”	**119913**	53.84			
	3-1/4”	**119914**	53.42			
	3-3/8”	**119915**	52.06	7/8 x 7/16	7/8 x 7/16	7/8 x 7/8
	3-7/16”	**119916**	52.04			
	3-1/2”	**119917**	51.12			
	3-5/8”	**119918**	50.08			
	3-11/16”	**119919**	49.00			
	3-3/4”	**119920**	48.47			
	3-7/8”	**119921**	47.03	1 x 1/2	1 x 1/2	1 x 1
	3-15/16”	**119922**	46.26			
	4”	**119923**	46.09			
	4-1/8”	**119924**	44.31			
	4-3/16”	**119925**	43.64			
	4-1/4”	**119926**	42.81			

P/N's marked (+) are Integral Key Bushings
Bore sizes marked (#) will be supplied with 1/2" wide keyway unless the 5/8" wide keyway is specified when ordering
* Key furnished for these sizes ONLY
** Key not furnished for mm bores sizes

Specifications

QD bushings – stock bore

QD bush size	Bore	P/N keyway	Wt.	Bushing keyway	Shaft keyway ref	Key size ref
M (cont)	4-3/8”	**119927**	41.46	1 x 1/2	1 x 1/2	1 x 1
	4-7/16”	**119928**	40.60			
	4-1/2”	**119929**	40.27			
	4-11/16”	**119930**	37.12	1-1/4 x 5/8	1-1/4 x 5/8	1-1/4 x 1-1/4
	4-3/4”	**119931**	37.00			
	4-7/8”	**119932**	36.89	1-1/4 x 1/4	1-1/4 x 5/8	1-1/4 x 7/8 *
	4-15/16”	**119933**	36.13			
	5”	**119934**	35.66			
	5-1/8”	**119899**	35.00			
	5-3/16”	**119894**	35.00			
	5-1/4”	**119935**	30.00			
	5-7/16”	**119936**	30.00			
	5-1/2”	**119937**	29.00			
N	2-7/16”	**119940**	87.57	5/8 x 5/16	5/8 x 5/16	5/8 x 5/8
	2-15/16”	**119941**	83.00	3/4 x 3/8	3/4 x 3/8	3/4 x 3/4
	3-7/16”	**119942**	80.00	7/8 x 7/16	7/8 x 7/16	7/8 x 7/8
	3-1/2”	**119980**	80.00			
	3-3/4”	**119943**	80.00			
	3-7/8”	**119944**	80.00	1 x 1/2	1 x 1/2	1 x 1
	3-15/16”	**119945**	80.00			
	4”	**119946**	80.00			
	4-3/16”	**119947**	80.00			
	4-1/4”	**119948**	80.00			
	4-3/8”	**119982**	79.00			
	4-7/16”	**119949**	78.00			
	4-1/2”	**119950**	77.00			
	4-11/16”	**119983**	76.00	1-1/4 x 5/8	1-1/4 x 5/8	1-1/4 x 1-1/4
	4-3/4”	**119951**	75.00			
	4-7/8”	**119952**	74.00			
	4-15/16”	**119953**	73.00			
	5”	**119954**	72.00			
	5-1/8”	**119955**	71.00	1-1/4 x 1/4	1-1/4 x 5/8	1-1/4 x 7/8 *
	5-3/16”	**119986**	70.50			
	5-1/4”	**119956**	70.00			
	5-7/16”	**119957**	52.19			
	5-1/2”	**119958**	49.02			
	5-3/4”	**119959**	49.00	1-1/2 x 1/8	1-1/2 x 3/4	1-1/2 x 7/8 *
	5-7/8”	**119960**	44.00			
	5-15/16”	**119961**	43.00			
	6”	**119962**	42.00			

QD bush size	Bore	P/N keyway	Wt.	Bushing keyway	Shaft keyway ref	Key size ref
P	3-7/16”	**119965**	134.00	7/8 x 7/16	7/8 x 7/16	7/8 x 7/8
	3-15/16”	**119966**	122.00	1 x 1/2	1 x 1/2	1 x 1
	4”	**119987**	122.00			
	4-7/16”	**119967**	122.40			
	4-1/2”	**119968**	121.00			
	4-3/4”	**119969**	120.00	1-1/4 x 5/8	1-1/4 x 5/8	1-1/4 x 1-1/4
	4-7/8”	**119985**	120.00			
	4-15/16”	**119970**	119.00			
	5”	**119971**	115.00			
	5-3/16”	**119984**	114.00			
	5-7/16”	**119972**	113.00			
	5-1/2”	**119973**	100.00			
	5-15/16”	**119974**	94.00			
	6”	**119975**	93.70	1-1/2 x 1/4	1-1/2 x 3/4	1-1/2 x 1 *
	6-7/16”	**119976**	83.50			
	6-1/2”	**119977**	80.50			
	7”	**119978**	68.00	1-3/4 x 1/8	1-3/4 x 3/4	1-3/4 x 7/8 *
W	4-1/4”	**120180**	260.00	1 x 1/2	1 x 1/2	1 x 1
	4-7/16”	**120181**	256.60			
	4-1/2”	**120182**	255.40			
	4-3/4”	**120183**	250.00	1-1/4 x 5/8	1-1/4 x 5/8	1-1/4 x 1-1/4
	5”	**120186**	244.30			
	5-3/8”	**120188**	235.30			
	5-1/2”	**120189**	232.20			
	5-3/4”	**120190**	225.70	1-1/2 x 3/4	1-1/2 x 3/4	1-1/2 x 1-1/2
	5-7/8”	**120191**	222.30			
	5-15/16”	**120192**	220.00			
	6”	**120193**	218.90			
	6-1/2”	**120194**	215.00			
	6-3/4”	**120328**	210.00	1-3/4 x 3/4	1-3/4 x 3/4	1-3/4 x 1-1/2
	7”	**120196**	184.90			
	7-1/4”	**120197**	184.40			
	7-1/2”	**120198**	175.80			
	7-3/4”	**120199**	172.00	2 x 1/4	2 x 3/4	2 x 1 *
	8”	**120200**	159.70			
S	▼ Bushings size available please call Dodge for information					

P/N’s marked (+) are Integral Key Bushings
Bore sizes marked (#) will be supplied with 1/2” wide keyway unless the 5/8” wide keyway is specified when ordering
* Key furnished for these sizes ONLY
** Key not furnished for mm bores sizes

Specifications

QD reborable

QD bush size	Sintered steel Bore	Sintered steel P/N	Cast iron Bore	Cast iron P/N	Ductile iron Bore	Ductile iron P/N
QT (L)	3/8”	**120595**				
JA	1/2”	**120050**				
SH	1/2”	**120051**			1/2”	**119876**
SDS	1/2”	**120052**			1-7/16”	**119877**
SD	1/2”	**120053**			1-9/16”	**119878**
SK	1/2”	**120054**			2”	**119879**
SF	1/2”	**120055**			2-5/16”	**119880**
E			7/8”	**120056**	7/8”	**119881**
F			1”	**120057**	1”	**119882**
J			1-1/2”	**120058**	1-1/2”	**119883**
M			2”	**119938**	2”	**119884**
N			2-7/16”	**119963**	2-7/16”	**119885**
P			3-7/16”	**119979**	3-7/16”	**119886**
W			4”	**120276**		
S			5-1/2”	**394059**		

Note: All reborable bushings are stocked without sawsplit to facilitate re-maching.
Sawsplit must be made in bushing to allow it to compress for proper gripping of the shaft.
Factory rebore and keyseat service as listed in MLP price book includes sawsplit.

QD – maximum bore capacities

QD bush size	Sintered steel Full key	Sintered steel Shallow key	Sintered steel Metric	Cast iron Full key	Cast iron Shallow key	Cast iron Metric	Ductile iron Full key	Ductile iron Shallow key	Ductile iron No key*	Ductile iron Metric
QT (L)										
JA	1”	1-1/16”	25				1”	1-3/16”	1-1/4”	25
SH	1-1/4”	1-1/4”	30				1-3/8”	1-5/8”	1-11/16”	35
SDS	1-9/16”	1-5/8”	40				1-5/8”	1-15/16”	2”	42
SD	1-9/16”	1-9/16”	40				1-11/16”	1-15/16”	2”	42
SK	2”	2-1/16”	50				2-1/2”	2-1/2”	2-5/8”	55
SF	2-1/4”	2-3/8”	55				2-5/16”	2-15/16”	2-15/16”	65
E				2-3/4”	3”	70	2-7/8”	3-1/2”	3-1/2”	89
F				3-1/4”	3-7/16”	90	3-1/4”	3-15/16”	4”	101
J				3-3/4”	3-7/8”	100	3-3/4”	4-1/2”	4-1/2”	114
M				4-3/4”	5”	120	4-3/4”	5-1/2”	5-1/2”	139
N				5”	5-1/4”	130	5”	6”	6”	149
P				5-1/2”	7”	160	5-1/2”	7”	7”	177
W				6-1/2”	7”	165	6-1/2”	8-1/2”	8-1/2”	216
S				8-1/4”	8-1/4”	209	8-1/4	10”	10”	250

Note: ISO standard method for measuring keyseat depth
mm Bore and Keyway dimensions conform to ISO standard recommendation
R773, for “Free” fit

REFERENCE:
1 inch = 25.4 millimeters
1 millimeter = .03937 inches

* Verify torque capacity: Contact Application Engineering for assistance

Specifications

QD bushing – metric bore and hardware

Features

- Baldor-Dodge QD®-style bushings stocked in popular finish bore sizes and minimum plain bore, for custom reboring
- Baldor-Dodge metric QD bushings supplied with metric hex-head cap screws and lock washers
- Stock reborable bushings available for custom reboring
- Reboring and sawsplit available for nominal extra charge
  Note: Rebore by others must be sawsplit after rebore
- Can be used with HT500 sprockets for conventional mounting only (English thread hardware required for demounting).

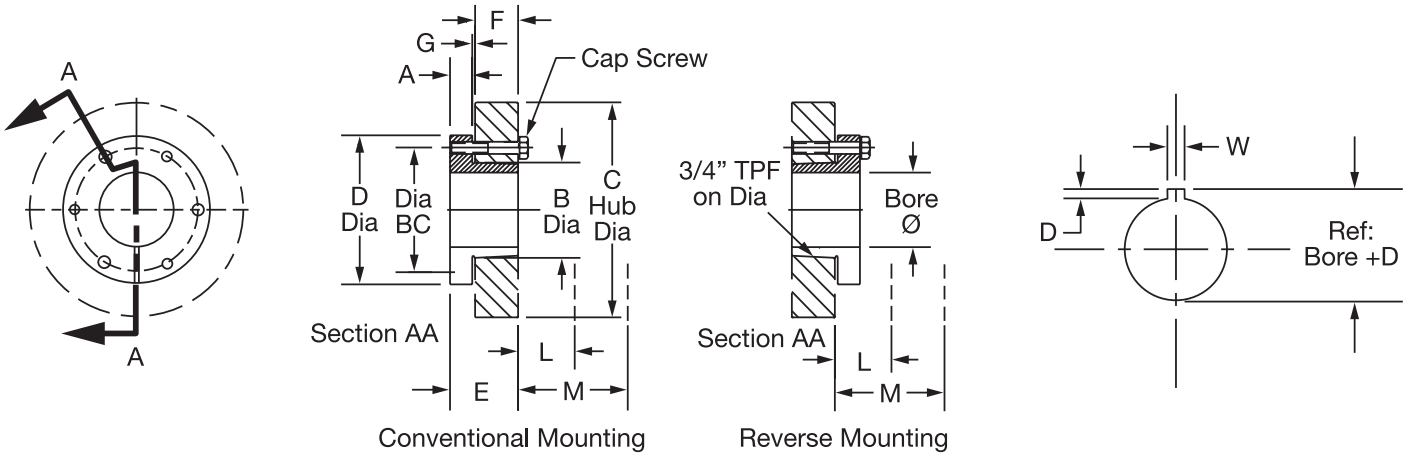

Specifications

QD bushing – metric bore and hardware

Stock reborable bushings and specifications

Bush symbol	Part no.	Ductile iron Max bore	Ductile iron Stock bore	A mm	B mm	C hub diameter Iron	C hub diameter Steel	D mm	E mm	F mm	G mm
										Dimensions (mm)	
QT / (L)	**119861**	35	10.00	6.40	41.40	76.20	69.90	63.50	33.30	22.20	4.80
JA	**119860**	25	12.70	7.90	35.10	99.80	57.20	50.80	25.40	14.20	3.10
SH	**119862**	36	12.70	10.90	47.80	120.70	76.20	66.80	33.30	20.60	3.10
SDS	**119863**	42	36.51	10.90	55.40	120.70	88.90	80.80	33.30	19.10	3.10
SD	**119864**	42	39.69	10.90	55.40	96.80	88.90	80.80	46.00	31.80	3.10
SK	**119865**	55	50.80	14.20	71.40	120.70	114.30	98.60	49.00	31.80	5.60
SF	**119866**	60	58.74	16.00	79.50	162.10	139.70	117.60	52.30	31.80	5.60
E	**119867**	82	22.20	22.40	97.30	190.50	165.10	152.40	69.90	41.40	6.40
F	**119868**	92	25.40	25.40	115.50	196.90	184.20	168.40	95.30	63.50	8.60
J	**119869**	104	38.10	28.70	130.60	228.60	203.20	184.20	117.60	80.80	9.70
M	**119870**	130	50.80	31.80	165.10	289.10	254.00	228.60	171.50	131.60	10.40

Type	Torque capacity (Nm)	Bushing Center diameter (mm)	Qty	Length (mm)	Size	Bolt Bolt torque (Nm)
QT / (L)	113	50.8	2	22	M6 x 1	9.6
JA	113	42.3	3	25	M5 x 0.8	5.6
SH	395	57.2	3	35	M6 x 1	11.5
SDS	565	68.3	3	35	M6 x 1	11.5
SD	565	68.3	3	50	M6 x 1	11.5
SK	781	84.1	3	50	M8 x 1.25	20.5
SF	1243	98.4	3	50	M10 x 1.5	34.0
E	2260	127.0	3	70	M12 x 1.75	77.0
F	3390	142.9	3	100	M14 x 2	100.0
J	5085	158.8	3	120	M16 x 2	194.5
M	9600	200.0	4	180	M20 x 2.5	256.0

QD Bushing – Metric Series

Metric QD bushing – metric hardware

mm Bore	QT / (L)	JA	SH	SDS	SD	SK	SF	Bushing number E	Bushing number F	mm keyway W	mm keyway D
14	-----	**117377**	-----	-----	-----	-----	-----	-----	-----	5	2.30
19	-----	**117371**	-----	-----	-----	-----	-----	-----	-----	6	2.80
20	-----	**117372**	**117378**	**117385**	-----	-----	-----	-----	-----	6	2.80
24	-----	**117373**	**117379**	**117386**	**117531**	**117540**	-----	-----	-----	8	3.30
25	**117356**	**117374***	**117380**	**117387**	**117532**	**117541**	**117553**	-----	-----	8	3.30
28	-----	-----	**117381**	**117388**	**117533**	**117542**	**117554**	-----	-----	8	3.30
30	**117357**	-----	**117382**	**117389**	**117534**	**117543**	**117555**	-----	-----	8	3.30
32	**117358***	-----	**117383***	**117390**	**117535**	**117544**	**117556**	-----	-----	10	3.30
35	-----	-----	**117384***	**117391**	**117536**	**117545**	**117557**	-----	-----	10	3.30
38	-----	-----	-----	**117392**	**117537**	**117546**	**117558**	-----	-----	10	3.30
40	-----	-----	-----	**117393**	**117538**	**117547**	**117559**	**117571***	**117583***	12	3.30
42	-----	-----	-----	**117394***	**117539***	**117548**	**117560**	-----	**117584***	12	3.30
45	-----	-----	-----	-----	-----	**117549**	**117561**	-----	-----	14	3.80
48	-----	-----	-----	-----	-----	**117550**	**117562**	-----	-----	14	3.80
50	-----	-----	-----	-----	-----	**117551**	**117563**	**117575***	**117587***	14	3.80
55	-----	-----	-----	-----	-----	**117552***	**117564**	**117576***	**117588***	16	4.30
60	-----	-----	-----	-----	-----	-----	**117565***	-----	**117589***	18	4.40

Part Numbers marked (*) are Ductile Iron

Specifications

Idler brackets and bushings

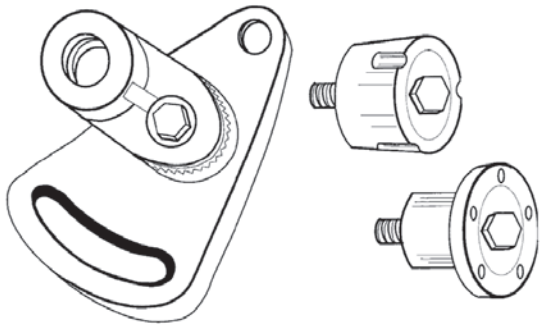

- Double adjustable bracket for maximum flexibility
- Positive ratchet locking between base and arm
- Idler bushings in Taper-Lock®and QD* Style
- Use with stock products, such as: sheaves, roller chain sprockets, HTD sprockets
- Compatible with products machined for: Taper-Lock 1610, 2012 and 2517 bushings; QD SK, SF and E bushings

* QD is a registered trademark of Emerson Electric.

Bracket specs

		Model no.		
		5	**10**	**20**
Part number		**115982**	**115986**	**115987**
Wt.		**3.40**	**3.40**	**13.50**
DIM.	A	4.62	4.63	6.94
	B	3.50	3.50	5.25
	C	1.75	1.75	2.62
	D	2.00	2.00	5.00
DIM.	E	2.06	2.06	3.00
	F	3.06	3.06	4.56
	G	3/8	3/8	5/8
	H	1.63	1.63	2.38
DIM.	J	0.62	0.62	0.88
	N	1.16	1.16	1.63
	P	2.01	2.01	2.94
	Q	2.00	2.00	3.00
	THD	5/8-18	3/4-16	1-14

Idler brackets

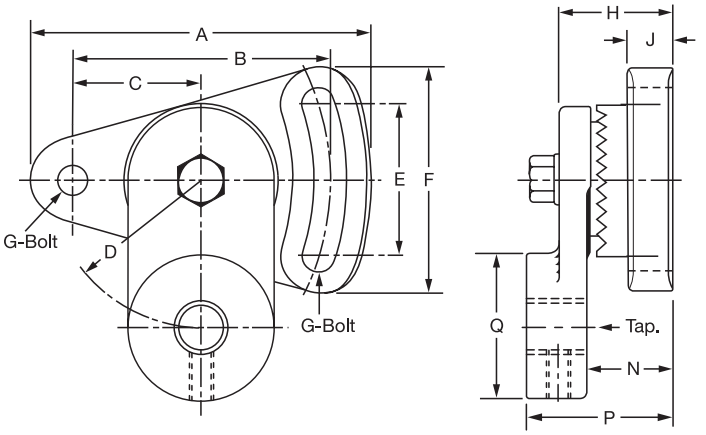

Bushing specs

Taper-Lock		**1610-IDL**	**2012-IDL**	**2517-IDL**
Part number for bracket no.		**115985**	**115983**	**115984**
		5	**10**	**10**
DIM.	D	2.25	2.75	3.38
	L	1.00	1.25	1.75
	M	1.38	1.56	1.56
	THD	5/8 - 18	3/4-16	3/4-16
	WT.	1.0	1.6	3.0
Bearings		6003	6204	6304

Idler bushings

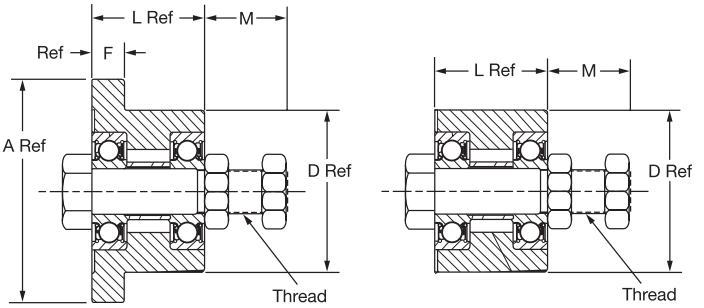

Overhung load calculations

Overhung load is an important consideration for drive design. Motor and reducer bearings are rated for specific load capacities to achieve calculated life. If the drive design is such that bearing loads are exceeded, life will be proportionally reduced. Likewise, if the drive exerts a lesser load on the bearings, life will be extended. Needless to say, drive design that keeps bearing loads below ratings can pay big dividends.

Belt Pull: The basis for overhung load calculation is belt pull. Belt pull is the result of torque being transmitted when the belt exerts a pull on the sprocket diameter.

Example: 5 hp at 200 RPM is 1,575 inch-pounds of torque. If a 6" diameter sprocket is used, (3 inch radius), 1,575/3 = 525 pounds effective belt pull is required. Note that if a larger diameter sprocket is used, belt pull is reduced accordingly.

Belt pull can be calculated using the following formula:

$$\text{Belt Pull (lbs)} = \frac{126{,}000 \times \text{Hp} \times \text{F}}{\text{RPM} \times \text{PD}}$$

Where:
- HP = Name plate horsepower of the motor or driver
- F = Drive Factor (1.3 for synchronous belt)
- RPM = Shaft RPM
- PD = Pitch Diameter of Sprocket

Bearing Load: Belt pull translates into bearing load and is greatly affected by the location of the sprocket on the shaft. Fig. 1 shows an example of what happens as the distance between the centerline of belt pull and the adjacent bearing is extended.

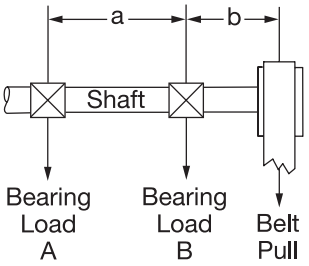

Overhung Sheave

$$\text{Load at B, lbs.} = \frac{\text{Belt Pull} \times (a + b)}{a}$$

Fig. 1

a	b	Belt pull	Bearing load "B"
10 in	1 in	500 lbs	550 lbs
10 in	5 in	500 lbs	750 lbs

Now consider the same situation for a motor or gearbox. Referring to Fig. 2, it should be obvious that the sprocket should be mounted as close as possible to the face of the gearbox.

As the distance between the gearbox face and sprocket increases, the bearing load is also increased, which leads to a reduction in bearing life.

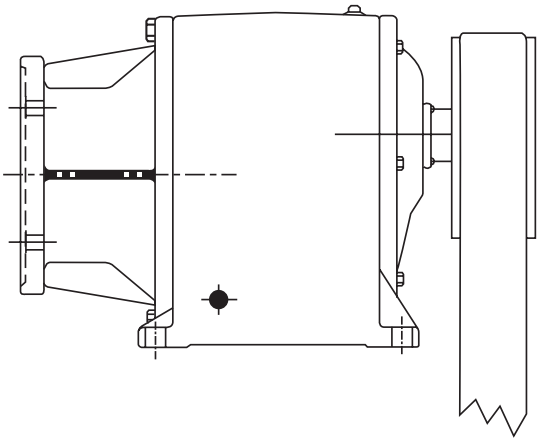

Fig. 2

Another warning from gearbox manufacturers is that the centerline of belt pull should not extend beyond the end of the shaft. Given a choice of a small diameter, wide face-width drive design, or a larger diameter, narrower face-width alternative, the latter would be preferable if bearing life is an important consideration.

Drive design considerations

For any given application, there are usually several possible drive alternatives. In some cases, the selection with the smallest diameter sprockets might be the least expensive. As can be seen from the previous discussion, this alternative could be a bad choice. Smaller diameter sprockets lead to higher belt pull; their greater width is also more sensitive to misalignment.

HT500 drive installation

Sprocket installation

1. Thoroughly inspect the bore of the sprocket and the tapered surface of the bushing. Any paint, dirt, oil or grease must be removed.
2. Assemble bushing into sprocket. Loosely insert the screws into assembly. At least one sprocket must have flanges.
3. With key in keyseat of shaft, slide sprocket to its desired position with screw heads to the outside. If it is hard to slide the bushing onto the shaft, check shaft for burrs, etc.
4. Line up assembly so as not to misalign belts and tighten screws evenly and progressively. Apply the recommended torque to screws.

Sprocket alignment

HT500 sprocket alignment and parallelism of the shafts is very important. Proper alignment helps to equalize the load across the entire belt width, thereby reducing wear and extending belt life.

Place a straightedge against the outside edge of the sprockets and move sprockets until the straightedge touches the two outside and two inside edges of the sprockets. The straightedge should cross the sprockets as close to the shafts as possible. A string can be used if a straightedge is not available. Remember the string should contact at four points as explained above. Note that the precision laser alignment tool (pn **109993**) is an accurate and practical alternative to the straightedge method.

After aligning the sprockets, check the rigidity of the supporting framework. Shafts should be well supported to prevent distortion and a resulting change in the center distance under load. Do not use spring-loaded or weighted idlers. Idler sprockets or pulleys must be locked into position after adjusting belt tension.

Belt installation and tensioning

Do not pry or otherwise force the belt onto the sprockets, as this can result in permanent damage to the belt. Reduce the center distance between the pulleys so that the belt can be easily installed.

HT500 drives must be properly tensioned. If the belt is too loose, it may jump teeth when heavier loads are applied. If the belt is too tight, belt life will suffer, and bearings will be unnecessarily overloaded. Improper tension can result in excessive drive noise.

Force/deflection tensioning procedure:

First, measure the span length and calculate the deflection distance of 1/64, per inch span (see illustration).

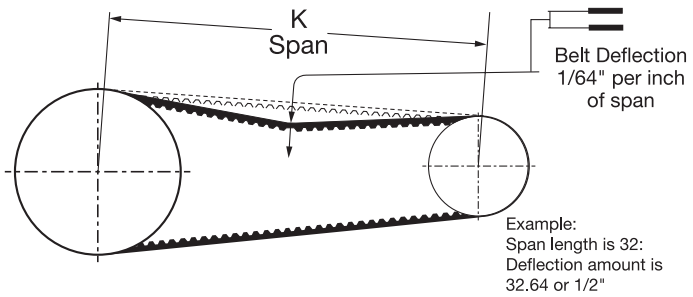

Apply the calculated deflection force at the center of the span. Measure the deflection with this force applied. Move the center distance until the proper deflection is obtained.

Sonic tension meter method:

The Sonic Tension Meter (pn **109994**) measures frequency in the belt upon an applied stimulus. The meter will then provide an output of both frequency and calculated static tension. The static tension is calculated based upon three user inputs: belt width, span (as measured in the above illustration) and the belt's mass constant. Variables for belt mass constants are provided in the following table.

Belt		Adjusted Belt Weight (g/m)
HT200	5M	4.1
HT200	8M	5.5
HT200	14M	9.6
HT250	8M	5.8
HT250	14M	9.7
HTD	8M	6.2
HTD	14M	9.9
HTD	20M	12.8
HT500	14M	7.9
HT500	8M	4.7

To measure the belt's span vibration:

Input parameters of span length, belt width and the belt mass constant into the meter.

Press the MEASURE button on the meter.

Thumb the belt at center span as if strumming a guitar string.

Hold the microphone 1/4" away from the back of the belt.

The tension meter will display static tension and frequency. Compare the frequency output to the formula below.

Note that drive outputs of static tension and frequency are also provided online from the ViaSync selection program at www.ptwizard.com.

$$T = 4 * M * W * S^2 * f^2 * 10^{-9}$$

Where:
- T = Belt span tension (Newtons)
- M = Belt mass constant (g/m)
- W = Belt width (mm)
- S = Span length (mm)
- f = Natural frequency of the belt at applied tension (Hz)

Drive alignment

Good tracking of synchronous belts on their sprockets depends upon alignment to within ¼°. This translates to a maximum "M" dimension of 0.05" per foot center distance.

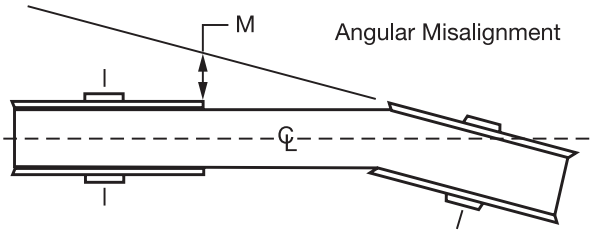

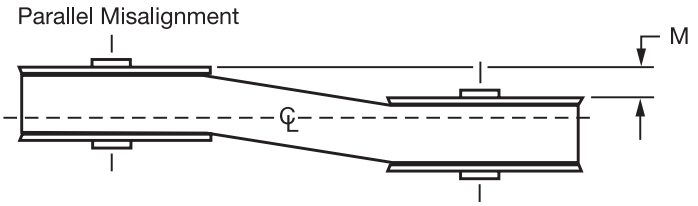

Drive tensioning

Formula method

The formula method for determining belt tension may be used for greater accuracy.

Step 1. Calculate Min. Installation Tension:

Formula 1:

$$T = \frac{20\,(Hp)}{V} + mV^2$$

Where: Hp = Horsepower

V = Belt Velocity/1000 (in FPM)

m = Value in Table 1.

Belt Velocity = PD x RPM x 0.262

(PD = Pitch Dia. in inches)

***Important!** If formula calculation for "T" is less than "Min T. Value" (Table 2) use the "Min T. Value" for T. Always use the greater T value; i.e. from T Formula 1 or Table 2.

Step 2. Calculate Deflection Forces:

Formula 2:

$$\text{MinForce} = \frac{1.0 * T + \left(\frac{K}{L}\right) Y}{16}$$

Formula 3:

$$\text{MaxForce} = \frac{1.1 * T + \left(\frac{K}{L}\right) Y}{16}$$

Note: For used belt, use 0.8*T to 0.9*T instead of the 1.1*T and 1.2*T for new belts.

T = Static tension, lbs

L = Belt length, inches

Y = Factor from Table 2.

K = Span length, inches

CD = Center distance, inches

D = Large pulley diameter, inches

D = Small pulley diameter, inches

$$k = \sqrt{CD^2 - \left(\frac{D-d}{4}\right)^2}$$

Drive tensioning

Table 1

	Pitch	Width	m	Y	Min Ts
HT200	5 mm	15 mm	0.28	24.9	14
HT200	5 mm	25 mm	0.47	41.5	23
HT200	8 mm	20 mm	0.58	34.2	19
HT200	8 mm	30 mm	0.88	51.3	30
HT200	8 mm	50 mm	1.46	85.5	52
HT200	8 mm	85 mm	2.45	145.3	95
HT200	14 mm	40 mm	1.78	93.0	77
HT200	14 mm	55 mm	2.44	127.9	120
HT200	14 mm	85 mm	3.77	197.7	206
HT200	14 mm	115 mm	5.11	267.5	291
HT200	14 mm	170 mm	7.55	395.4	447
HTD	20 mm	115 mm	7.24	367.0	392
HTD	20 mm	170 mm	10.71	542.5	603
HTD	20 mm	230 mm	14.49	734.0	834
HTD	20 mm	290 mm	18.27	925.4	1065
HTD	20 mm	340 mm	21.42	1085.0	1258
HT250	8 mm	20	0.54	42.29	19
HT250	8 mm	30	0.81	63.44	30
HT250	8 mm	50	1.35	105.7	52
HT250	8 mm	85	2.29	179.7	95
HT250	14 mm	40	1.80	93.04	77
HT250	14 mm	55	2.48	127.9	120
HT250	14 mm	85	3.83	197.7	206
HT250	14 mm	115	2.18	267.5	291
HT250	14 mm	170	7.66	395.4	448
HT500	8 mm	12 mm	0.33	65	28
HT500	8 mm	21 mm	0.57	113	49
HT500	8 mm	36 mm	0.97	194	84
HT500	8 mm	62 mm	1.68	335	145
HT500	14 mm	20 mm	0.92	230	119
HT500	14 mm	37 mm	1.69	4.26	220
HT500	14 mm	68 mm	3.11	782	405
HT500	14 mm	90 mm	4.12	1035	536
HT500	14 mm	125 mm	5.72	1438	744

Engineering and technical

Software: Dodge® Passport

For any given synchronous drive application, there may be several Dodge HT500, HT250, HTD or Dodge Dyna-Sync® product combinations that could satisfy the requirements. Finding the best drive can be a time-consuming and frustrating task.

The Dodge Passport program provides selections for all of these product offerings for both Taper-Lock® and QD* type sprockets. All relevant data for limited and unlimited drive selections is presented in a format that allows quick and accurate analysis and sorting, whether based upon lowest price, minimum bearing load, highest service factor, etc.

Dodge Passport provides a formal output document of the selected drive that can be customized for end users.

Dodge Passport can be accessed through PTplace.com or by going to passport.baldor.com. Additional troubleshooting and selection assistance is available at 864-284-5700.

Troubleshooting

Problem	Cause	Remedy
Unusual noise	Misaligned drive	Re-adjust alignment
	Hi or Low belt tension	Adjust to recommended value
	Backside idler	Use inside idler
	Worn sprocket	Replace sprocket
	Bent sprocket flange	Replace or repair
	Excessive belt speed	Redesign drive
	Incorrect belt profile	Replace with Dodge belt
	Subminimal spkt. dia.	Redesign with lager spkts.
	Excessive load	Use higher capacity drive
	Weak mntg. structure	
Loss of belt tension	Weak mntg. structure	Reinforce mounting structure
	Excessive spkt. wear	Use wear-resistant sprockets
	Fixed center drive	Install inside idler
	Excessive debris	Install adequate drive guard.
	Excessive load	Use higher capacity drive
	Subminimal spkt. dia.	Redesign drive
	Drive running hot	Use heat fingers on hot shaft
	Belt degradation	Protect from excessive heat
Belt edge wear	Damaged flanges	Repair or replace sprocket
	Low belt tension	Adjust to recommended value
	Poor tracking	Correct alignment
	Guard interference	Remove obstruction, add idler
Premature tooth wear	Improper tension	Correct drive tension
	Poor alignment	Correct drive alignment
	Wrong belt type	Use correct Dodge belt
	Worn sprocket	Replace
	Damaged sprocket	Replace
	Excessive load	Use higher capacity drive
	Dirt or debris	Install adequate drive guard
	Sprocket wobble	Correct bushing installation

Problem	Cause	Remedy
Tooth shear	Shock loads	Use higher capacity drive
	Few teeth in mesh	Redesign drive
	Worn sprocket	Replace
	Backside idler	Use inside idler
	Wrong belt profile	Use correct Dodge belt
	Low belt tension	Adjust to recommended value
Tensile break	Shock load	Use higher capacity drive
	Subminimal sprocket dia.	Redesign with larger spkts.
	Debris in drive	Install adequate drive guard
	Improper belt handling, storage	Do not crimp belt or subject it to sharp bends
Belt cracking	Subminimal sprocket dia.	Redesign with larger spkts.
	Backside idler	Install inside idler
	Start-up temp below 180 degrees F	Preheat drive before start-up
	Extended exposure to harsh chemicals	Protect drive
Bearing failure	Excessive belt tension	Adjust to recommended value
	Drive misalignment	Re-adjust alignment
	Subminimal sprocket dia.	Redesign with larger spkts.
Vibration	Wrong belt profile	Install correct Dodge belt
	Hi or Low belt tension	Adjust to recommended value
	Loose key or bushing	Install per instructions
	Loose mounting structure	Reinforce or tighten
Belt not tracking	Misalignment	Re-adjust alignment
	Long center distance	Carefully adjust alignment
	Mtg. structure bending	Reinforce mounting structure

Part number index

Part number	Page
109993	100
109994	101
114765	84
114766	84
114767	84
114768	84
114769	84
114770	84
114771	84
114772	84
114773	84
114774	84
114775	84
114776	84
114777	84
114778	84
114779	84
114780	84
114781	84
114782	84
114783	84
114784	84
114785	84
114786	84
114787	84
114788	84
114789	84
114790	84
114791	84
114792	84
114793	84
114794	84
114795	84
114796	84
114797	84
114798	84
114799	84
114800	84
114801	84
114802	84
114803	84
114804	84
114805	84
114806	84
114807	84
114865	85
114866	85
114867	85
114868	85
114869	85
114870	85
114871	85
114872	85
114873	85
114874	85
114875	85
114876	85
114877	85
114878	85
114879	85
114880	85
114881	85
114882	85
114883	85
114884	85
114885	85
114886	85
114887	85
114888	85
114889	85
114890	85
114891	85
114892	85
114893	85
114894	85
114895	85
114896	85
114897	85
114898	85
114899	85
114900	85
115982	98
115983	98
115984	98
115985	98
115986	98
115987	98
117004	82
117005	82
117007	82
117008	82
117009	82
117010	82
117011	82
117012	82
117013	82
117014	82
117015	82
117016	82
117017	82
117018	82
117019	82
117020	82
117021	82
117022	82
117023	82
117024	82
117025	82
117026	82
117027	82
117028	82
117029	82
117031	82
117032	82
117033	82
117035	82
117036	82
117037	82
117043	90
117045	86
117049	90
117071	80
117073	80
117074	80
117075	80
117076	80
117077	80
117078	80
117079	80
117080	80
117081	80
117082	80
117083	80
117084	80
117085	80
117086	80
117087	81
117088	81
117089	81
117090	81
117091	81
117092	81
117093	81
117094	81
117095	81
117096	81
117097	81
117098	81
117099	81
117101	82
117102	82
117103	82
117104	82
117105	82
117106	82
117107	82
117108	82
117109	82
117110	82
117111	81
117112	82
117113	82
117114	82
117115	81
117116	82
117117	82
117118	82
117119	82
117120	82
117121	82
117122	82
117124	82
117125	82
117126	82
117128	82
117129	82
117130	82
117132	82
117133	82
117134	82
117135	82
117136	82
117137	82
117139	82
117147	86
117149	86
117150	80
117151	80
117152	80
117153	80
117154	80
117155	80
117156	80
117157	80
117158	80
117159	80
117160	80
117161	80
117162	80
117163	80
117164	81
117165	81
117166	81
117167	81
117168	81
117169	81
117170	81
117173	81
117174	81
117175	81
117176	81
117177	81
117178	82
117179	82
117180	82
117181	82
117182	82
117183	82
117205	86
117207	83
117208	83
117209	83
117210	83
117211	83
117212	83
117213	83
117214	83
117215	83
117216	83
117217	83
117218	83
117219	83
117220	83
117221	83
117222	83
117223	83
117224	83
117225	83
117226	83
117227	83
117228	83
117229	83
117230	83
117231	83
117232	83
117233	83
117234	83
117235	83
117236	83
117237	83
117250	86
117267	84
117297	83
117307	86
117310	84
117311	84
117312	84
117313	84
117314	84
117315	84

Part number index

Part number	Page
117316	84
117317	84
117318	84
117319	84
117320	84
117321	84
117322	84
117323	84
117324	84
117325	84
117326	84
117327	84
117328	84
117329	84
117330	84
117331	84
117332	84
117333	84
117334	84
117335	84
117336	84
117337	84
117338	84
117340	84
117341	84
117345	86
117352	84
117356	97
117357	97
117358	97
117371	97
117372	97
117373	97
117374	97
117377	97
117378	97
117379	97
117380	97
117381	97
117382	97
117383	97
117384	97
117385	97
117386	97
117387	97
117388	97
117389	97
117390	97
117391	97
117392	97
117393	97
117394	97
117411	85
117413	84
117414	86
117416	84
117417	84
117419	84
117421	84
117422	84
117424	84
117426	84
117427	84
117428	84
117429	84
117430	84
117431	84
117432	84
117433	84
117434	84
117435	84
117436	84
117437	84
117438	84
117439	84
117440	85
117441	84
117442	84
117443	84
117444	84
117447	85
117448	86
117450	85
117451	86
117452	85
117453	85
117454	85
117455	86
117458	85
117459	85
117460	85
117461	85
117462	85
117463	85
117464	85
117465	85
117466	85
117467	85
117468	85
117469	85
117471	86
117472	86
117473	85
117474	85
117475	85
117476	85
117477	85
117479	85
117480	85
117481	85
117482	85
117483	85
117484	85
117485	85
117486	85
117487	85
117488	85
117489	86
117490	85
117491	85
117492	85
117493	85
117494	85
117495	85
117496	85
117497	85
117498	86
117502	86
117503	85
117504	86
117505	86
117506	86
117508	85
117510	85
117520	85
117521	85
117522	85
117523	85
117524	85
117525	85
117526	85
117527	85
117531	97
117532	97
117533	97
117534	97
117535	97
117536	97
117537	97
117538	97
117539	97
117540	97
117541	97
117542	97
117543	97
117544	97
117545	97
117546	97
117547	97
117548	97
117549	97
117550	97
117551	97
117552	97
117553	97
117554	97
117555	97
117556	97
117557	97
117558	97
117559	97
117560	97
117561	97
117562	97
117563	97
117564	97
117565	97
117571	97
117575	97
117576	97
117583	97
117584	97
117587	97
117588	97
117589	97
117703	83
117704	84
117705	85
117707	83
117708	83
117709	83
117710	83
117714	84
117715	84
117716	84
117717	84
117718	85
117719	85
117721	82
117722	83
117723	84
117724	84
117725	84
117726	84
117729	84
117734	85
117736	85
117737	83
117738	83
117849	84
117850	84
119001	80
119002	80
119003	80
119004	80
119005	80
119006	80
119007	80
119008	80
119009	80
119010	80
119011	80
119012	80
119013	80
119023	86
119038	81
119039	81
119040	81
119041	81
119042	81
119043	81
119044	81
119045	81
119046	81
119047	81
119048	81
119049	81
119050	81
119051	81
119052	81
119053	81
119054	81
119055	81
119056	81
119057	81
119058	81
119067	86
119068	81
119100	81
119102	81
119103	81
119104	81
119105	81
119106	81
119107	81
119108	81
119109	81
119110	81
119111	81
119112	81

Part number index

Part number	Page
119113	81
119114	81
119115	81
119116	81
119117	81
119118	81
119119	81
119120	81
119121	81
119122	81
119123	81
119124	81
119125	81
119129	81
119141	86
119144	81
119176	80
119177	80
119179	80
119181	80
119183	80
119187	86
119191	80
119192	80
119194	80
119196	80
119198	80
119200	80
119206	86
119209	86
119211	80
119212	80
119213	80
119214	80
119215	80
119216	80
119217	80
119219	80
119220	80
119221	80
119222	80
119223	80
119224	80
119225	80
119226	80
119227	80
119228	80
119229	80
119236	81
119241	81
119242	81
119244	81
119246	81
119248	81
119249	81
119250	81
119252	81
119253	81
119254	81
119256	81
119257	81
119258	81
119262	81
119272	86
119304	82
119306	82
119307	82
119308	82
119310	82
119311	82
119312	82
119314	82
119315	82
119316	82
119318	82
119319	82
119320	82
119321	82
119322	82
119323	82
119324	82
119326	82
119327	82
119328	82
119329	82
119330	82
119331	82
119332	82
119361	86
119365	80
119366	80
119368	80
119370	80
119372	80
119374	80
119386	86
119390	80
119391	80
119392	80
119393	80
119394	80
119395	80
119396	80
119397	80
119398	80
119399	80
119400	80
119401	80
119402	80
119403	80
119404	80
119410	86
119411	86
119412	86
119413	86
119414	86
119415	86
119416	86
119417	86
119418	86
119419	86
119421	86
119422	86
119423	86
119429	86
119430	86
119431	86
119432	86
119433	86
119434	86
119435	86
119436	86
119437	86
119438	80
119565	80
119566	80
119567	80
119568	80
119569	80
119570	80
119571	80
119572	80
119573	81
119574	81
119575	80
119576	80
119577	80
119579	80
119580	80
119581	80
119582	80
119583	80
119584	80
119585	80
119586	80
119587	80
119588	80
119589	80
119590	80
119591	80
119592	80
119593	80
119594	80
119595	80
119596	80
119598	81
119599	81
119600	81
119601	81
119602	81
119603	81
119604	81
119605	81
119606	81
119607	81
119608	81
119609	81
119610	81
119611	81
119612	81
119613	81
119614	81
119615	81
119616	81
119617	81
119618	81
119619	81
119620	81
119621	81
119622	81
119623	81
119624	82
119625	82
119626	82
119627	82
119628	82
119629	82
119630	82
119640	82
119641	82
119642	82
119643	82
119644	82
119645	82
119646	82
119647	82
119648	82
119649	82
119650	82
119651	80
119652	80
119653	80
119654	80
119655	80
119656	80
119657	80
119658	80
119659	80
119660	80
119661	80
119662	80
119663	81
119664	81
119665	81
119666	81
119667	81
119668	81
119669	81
119670	81
119671	81
119672	81
119673	82
119674	82
119675	82
119676	82
119677	82
119678	82
119679	82
119680	82
119681	82
119682	82
119683	83
119700	86
119701	86
119702	83
119703	83
119704	83
119705	83
119706	83
119707	83
119708	83
119709	83
119710	83
119711	83
119712	83
119713	83
119714	83
119715	83
119716	83
119717	83

Part number index

Part number	Page
119718	83
119719	83
119720	83
119721	83
119722	83
119723	83
119724	83
119725	83
119726	83
119727	83
119728	83
119729	83
119730	83
119731	83
119732	83
119733	83
119734	83
119735	83
119736	83
119737	83
119738	83
119739	83
119740	83
119741	83
119742	83
119743	83
119744	83
119745	83
119746	83
119747	83
119748	83
119749	83
119750	83
119751	83
119752	83
119753	83
119754	84
119755	84
119756	84
119757	84
119758	84
119759	84
119760	84
119761	84
119762	84
119763	84
119764	84
119765	84
119766	86
119767	86
119768	86
119769	86
119770	83
119771	83
119772	83
119773	83
119774	83
119775	83
119776	83
119777	83
119778	83
119779	83
119780	83
119781	83
119782	83
119783	83
119784	84
119785	84
119786	84
119787	84
119788	84
119789	86
119790	86
119791	83
119792	83
119793	83
119795	83
119796	83
119797	83
119798	83
119799	83
119808	82
119809	82
119810	82
119811	82
119812	83
119813	83
119814	83
119815	83
119816	83
119817	83
119818	84
119819	84
119820	84
119860	97
119861	97
119862	97
119863	97
119864	97
119865	97
119866	97
119867	97
119868	97
119869	97
119870	97
119876	95
119877	95
119878	95
119879	95
119880	95
119881	95
119882	95
119883	95
119884	95
119885	95
119886	95
119894	94
119895	83
119899	94
119900	93
119901	93
119902	93
119903	93
119904	93
119905	93
119906	93
119907	93
119908	93
119909	93
119910	93
119911	93
119912	93
119913	93
119914	93
119915	93
119916	93
119917	93
119918	93
119919	93
119920	93
119921	93
119922	93
119923	93
119924	93
119925	93
119926	93
119927	94
119928	94
119929	94
119930	94
119931	94
119932	94
119933	94
119934	94
119935	94
119936	94
119937	94
119938	95
119940	94
119941	94
119942	94
119943	94
119944	94
119945	94
119946	94
119947	94
119948	94
119949	94
119950	94
119951	94
119952	94
119953	94
119954	94
119955	94
119956	94
119957	94
119958	94
119959	94
119960	94
119961	94
119962	94
119963	95
119965	94
119966	94
119967	94
119968	94
119969	94
119970	94
119971	94
119972	94
119973	94
119974	94
119975	94
119976	94
119977	94
119978	94
119979	95
119980	94
119982	94
119983	94
119984	94
119985	94
119986	94
119987	94
120050	95
120051	95
120052	95
120053	95
120054	95
120055	95
120056	95
120057	95
120058	95
120070	91
120071	92
120073	92
120074	92
120075	92
120076	93
120077	93
120088	90
120089	90
120090	90
120091	90
120092	90
120093	90
120094	91
120095	91
120096	91
120097	91
120098	91
120099	91
120100	91
120101	91
120102	91
120103	91
120104	91
120105	91
120106	91
120107	91
120108	91
120109	91
120110	91
120111	91
120112	91
120113	91
120114	91
120115	91
120116	91
120117	91
120118	91
120119	91
120120	91
120121	91
120122	91
120123	91
120124	92
120125	92
120126	92
120127	92

Part number index

Part number	Page
120128	92
120129	92
120130	92
120131	92
120132	92
120133	92
120134	92
120135	92
120136	92
120137	92
120138	92
120139	92
120140	92
120141	92
120142	92
120143	92
120144	92
120145	92
120146	92
120147	93
120148	93
120149	93
120150	93
120151	93
120152	93
120153	93
120154	93
120155	93
120157	93
120158	93
120159	93
120160	93
120161	93
120162	93
120163	93
120164	93
120165	93
120166	93
120167	93
120180	94
120181	94
120182	94
120183	94
120186	94
120188	94
120189	94
120190	94
120191	94
120192	94
120193	94
120194	94
120196	94
120197	94
120198	94
120199	94
120200	94
120276	95
120328	94
120329	90
120332	90
120333	90
120334	90
120335	90
120336	90
120337	90
120338	90
120339	90
120340	90
120341	90
120342	90
120343	90
120344	90
120345	90
120346	90
120347	90
120348	90
120349	90
120350	90
120351	90
120352	90
120353	90
120354	90
120355	90
120356	90
120357	90
120358	90
120359	90
120360	90
120361	90
120362	90
120363	90
120364	91
120365	91
120366	91
120367	91
120368	91
120369	91
120370	91
120371	91
120372	91
120373	91
120374	91
120375	91
120376	91
120377	91
120378	91
120379	91
120380	91
120381	91
120382	91
120383	91
120384	91
120385	91
120386	91
120387	91
120388	90
120389	90
120390	90
120391	90
120392	90
120393	90
120394	90
120395	90
120396	90
120397	90
120398	90
120399	90
120400	90
120401	90
120402	90
120403	91
120404	91
120405	91
120406	91
120407	91
120408	91
120409	91
120410	91
120411	91
120412	91
120413	91
120414	91
120415	91
120416	91
120417	91
120418	91
120419	91
120420	91
120421	91
120422	91
120423	91
120424	91
120425	91
120426	91
120427	91
120428	91
120429	91
120430	91
120431	91
120432	91
120433	91
120434	91
120435	91
120436	91
120437	91
120438	91
120439	91
120440	91
120441	91
120442	91
120443	91
120444	91
120445	91
120447	91
120448	91
120449	91
120450	91
120451	91
120452	91
120453	91
120454	91
120455	91
120456	91
120457	91
120458	91
120459	91
120460	91
120461	92
120462	92
120463	92
120464	92
120465	92
120466	92
120467	92
120468	92
120469	92
120470	92
120471	92
120472	92
120473	92
120474	92
120475	92
120476	92
120477	92
120478	92
120479	92
120482	92
120483	92
120484	92
120485	92
120486	92
120487	92
120488	92
120490	92
120492	92
120493	92
120494	92
120495	92
120496	92
120497	92
120498	92
120499	92
120500	92
120501	92
120502	92
120503	92
120504	92
120505	92
120506	92
120507	92
120508	92
120509	92
120510	92
120511	92
120512	92
120513	92
120514	92
120516	92
120517	92
120518	92
120519	92
120520	92
120521	92
120522	92
120524	92
120525	92
120526	92
120527	92
120528	92
120529	92
120530	92
120531	92
120533	92
120534	92
120535	92
120537	92
120538	92
120539	92
120540	92
120541	92

Part number index

Part number	Page
120542	92
120543	92
120544	92
120545	92
120546	92
120547	92
120548	92
120549	92
120550	92
120551	92
120552	93
120553	93
120554	93
120555	93
120557	93
120558	93
120559	93
120560	93
120561	93
120562	93
120563	93
120565	93
120566	93
120567	93
120569	93
120570	93
120571	93
120573	93
120574	93
120575	93
120577	93
120578	93
120579	93
120580	90
120581	91
120592	92
120595	95
120600	93
120601	93
120603	93
120604	93
120605	93
120606	93
120607	93
120608	93
120609	93
120610	93
120611	93
120612	93
120613	93
120614	93
120615	93
120617	93
120618	93
120619	93
120620	93
120621	93
120622	93
120623	93
120624	93
120625	93
120626	93
120627	93
120628	93
120629	93
120630	93
120631	93
120632	93
120633	93
120634	93
120635	93
120636	93
120637	93
121129	90
121130	90
121131	90
121133	90
121134	90
121136	90
121138	90
121140	90
121144	90
121145	90
121146	90
121147	90
121148	90
121149	90
121151	90
121153	90
121154	90
121162	90
121163	90
121164	90
121186	90
121187	90
121467	90
122050	90
122051	90
122052	90
122053	90
122054	90
122055	90
122056	90
142600	17
142601	17
142602	17
142603	17
142604	17
142605	17
142606	17
142607	17
142608	17
142609	17
142610	17
142611	17
142612	17
142613	17
142614	17
142615	17
142616	17
142617	17
142618	17
142619	17
142620	17
142621	17
142622	17
142623	17
142624	17
142625	17
142626	17
142627	17
142628	17
142629	17
142630	17
142631	17
142632	17
142633	17
142634	17
142635	17
142636	17
142637	17
142638	17
142639	17
142640	17
142641	17
142642	17
142643	17
142644	17
142645	17
142646	17
142647	17
142648	17
142649	17
142650	17
142651	17
142652	17
142653	17
142654	17
142655	17
142656	17
142657	17
142658	17
142659	17
142660	17
142661	17
142662	17
142663	17
142664	17
142665	17
142666	17
142667	17
142668	17
142669	17
142670	17
142671	17
142672	17
142673	17
142674	17
142675	17
142676	17
142677	17
142678	17
142679	17
142680	17
142681	17
142682	17
142683	17
142684	17
142685	17
142686	17
142687	17
142688	17
142689	17
142690	17
142691	17
142692	17
142693	17
142694	17
142695	17
142696	17
142697	17
142698	17
142699	17
142700	17
142701	17
142702	17
142703	17
142704	17
142705	17
142706	17
142707	17
142708	17
142709	17
142710	17
142711	17
142712	17
142713	17
142714	17
142715	17
142716	17
142717	17
142718	17
142719	17
142720	17
142721	17
142722	17
142723	17
142724	17
142725	17
142726	17
142727	17
142728	17
142729	17
142730	17
142731	17
142732	17
142733	17
142734	17
142735	17
142736	17
142737	17
142738	17
142739	17
142740	17
142741	17
142742	17
142743	17
142744	18
142745	18
142746	18
142747	18
142748	18
142749	18
142750	18
142751	18
142752	18
142753	18
142754	18
142755	18
142756	18

Part number index

Part number	Page
142757	18
142758	18
142759	18
142760	18
142761	18
142762	18
142763	18
142764	18
142765	18
142766	18
142767	18
142768	18
142769	18
142770	18
142771	18
142772	18
142773	18
142774	18
142775	18
142776	18
142777	18
142778	18
142779	18
142780	18
142781	18
142782	18
142783	18
142784	18
142785	18
142786	18
142787	18
142788	18
142789	18
142790	18
142791	18
142792	18
142793	18
142794	18
142795	18
142796	18
142799	18
142800	18
142801	18
142802	18
142803	18
142804	18
142805	18
142806	18
142807	18
142808	18
142809	18
142810	18
142811	18
142812	18
142813	18
142814	18
142815	18
142816	18
142817	18
142818	18
142819	18
142820	18
142821	18
142822	18
142823	18
142824	18
142825	18
142826	18
142827	18
142828	18
142829	18
142830	18
142831	18
142832	18
142833	18
142834	18
142835	18
142836	18
142837	18
142838	18
142839	18
142840	18
142841	18
142842	18
142843	18
142844	18
142845	18
142846	18
142847	18
142848	18
142849	18
142850	18
142851	18
142852	18
142853	18
142854	18
142855	18
142856	18
142857	18
142858	18
142859	18
142860	18
142861	18
142862	18
142863	18
142864	18
142865	18
142866	18
142867	18
142868	18
142869	18
142870	18
142871	18
142872	18
142873	18
142874	18
142875	18
142876	18
142877	18
142878	18
151152	90
393002	81
393170	83
394059	95
426013	83
481870	12
481871	12
481872	12
481873	12
481874	12
481875	6
481876	6
481877	6
481878	6
481879	6
481880	6
481881	6
481882	6
481883	6
481884	6
481885	6
481886	6
481887	6
481888	6
481889	6
481890	6
481891	6
481892	6
481893	6
481894	6
481895	6
481896	6
481897	6
481898	6
481899	6
481900	6
481901	6
481902	6
481903	6
481904	6
481905	6
481906	6
481907	6
481908	6
481909	6
481910	12
481911	12
481912	12
481913	12
481914	12
481915	7
481916	7
481917	7
481918	7
481919	7
481920	7
481921	7
481922	7
481923	7
481924	7
481925	7
481926	7
481927	7
481928	7
481929	7
481930	7
481931	7
481932	7
481933	7
481934	7
481935	7
481936	7
481937	7
481938	7
481939	7
481940	7
481941	7
481942	7
481943	7
481944	7
481945	7
481946	7
481947	7
481948	7
481949	7
481950	12
481951	12
481952	12
481953	12
481954	12
481955	12
481956	12
481957	12
481958	7
481959	7
481960	7
481961	7
481962	7
481963	7
481964	7
481965	7
481966	7
481967	7
481968	7
481969	7
481970	7
481971	8
481972	8
481973	8
481974	8
481975	8
481976	8
481977	8
481978	8
481979	8
481980	8
481981	8
481982	8
481983	8
481984	8
481985	12
481986	12
481987	12
481988	12
481989	12
481990	12
481991	12
481992	12
481993	12
481994	12
481995	12
481996	8
481997	8
481998	8
481999	8
482000	8
482001	8
482002	8
482003	8
482004	8

Part number index

Part number	Page
482005	8
482006	8
482007	8
482008	8
482009	8
482010	8
482011	8
482012	8
482013	8
482014	8
482015	8
482016	8
482017	9
482018	9
482019	9
482020	9
482021	9
482022	9
482023	9
482024	9
482025	9
482026	9
482027	9
482028	9
482029	9
482030	9
482031	9
482032	9
482033	9
482034	9
482035	9
482036	9
482037	9
482038	9
482039	9
482040	9
482041	9
482042	9
482043	9
482044	9
482045	9
482046	9
482047	9
482048	9
482049	9
482050	9
482051	13
482052	9
482053	9
482054	9
482055	9
482056	9
482057	9
482058	10
482059	10
482060	10
482061	10
482062	10
482063	10
482064	10
482065	10
482066	10
482067	10
482068	10
482069	10
482070	10
482071	10
482072	10
482073	10
482074	10
482075	10
482076	10
482077	10
482078	10
482079	10
482080	10
482081	10
482082	10
482083	10
482084	10
482085	10
482086	14
482087	14
482088	14
482089	13
482090	13
482091	13
482092	13
482093	13
482094	13
482095	13
482096	10
482097	10
482098	10
482099	10
482100	10
482101	10
482102	10
482103	10
482104	10
482105	10
482106	10
482107	10
482108	10
482109	10
482110	10
482111	10
482112	10
482113	10
482114	10
482115	10
482116	10
482117	10
482118	10
482119	10
482120	11
482121	11
482122	11
482123	11
482124	11
482125	11
482126	11
482127	11
482128	13
482129	13
482130	13
482131	13
482132	13
482133	13
482134	13
482135	13
482136	13
482137	13
482138	13
482139	13
482140	13
482141	11
482142	11
482143	11
482144	11
482145	11
482146	11
482147	11
482148	11
482149	11
482150	11
482151	11
482152	11
482153	11
482154	11
482155	11
482156	11
482157	11
482158	11
482159	11
482160	11
482161	11
482162	11
482163	11
482164	11
482165	11
482166	13
482167	13
482168	13
482169	13
482170	13
482171	13
482172	13
482173	13
482174	13
482175	13
482176	13
482177	13
482178	13
482179	13
482180	13
482181	13
482182	11
482183	11
482184	11
482185	11
482186	11
482187	11
482188	11
482189	11
482190	11
482191	11
482192	11
482193	11
482194	11
482195	11
482196	11
482197	11
482198	11
482199	15
482200	15
482201	15
482202	15
482203	15
482204	15
482205	15
482206	15
482207	15
482208	15
482209	15
482210	15
482211	15
482212	15
482213	15
482214	15
482215	15
482216	15
482217	15
482218	15
482219	15
482220	15
482221	15
482222	15
482223	15
482224	15
482225	15
482226	15
482227	15
482228	15
482229	15
482230	15
482231	15
482232	15
482233	16
482234	16
482235	16
482236	16
482237	16
482238	16
482239	16
482240	16
482241	16

To receive a copy of the Dodge® Bearing Engineering Catalog, Dodge Gearing Engineering Catalog, Dodge Power Transmission Components Engineering Catalog, or Dodge product manuals, contact your local authorized Dodge distributor or **dodgeindustrial.com**

Member of...

American Bearing Manufacturers Association

American Gear Manufacturers Association

Bearing Specialist Association

Conveyor Equipment Manufacturers Association

Hydraulic Institute

Mechanical Power Transmission Association

National Electrical Manufacturers Association

Power Transmission Distributors Association

Member of...

Electrical Apparatus Service Association, Inc.

MHI - the industry that makes supply chains work

National stone, sand & gravel association

Society for Mining, Metallurgy & Exploration Inc.

Society of women engineers

NIBA The Belting Association

Dodge products are Manufactured in ISO 9001 Certified Plants

Prices and data indicated in this document are for your convenience and were correct at time of printing with the exception of clerical and/or printing errors. Possession of this document by any person or company is not to be construed as an offer to sell to him or to anyone else the goods listed herein at the prices stated.

All data and prices are subject to change without notice and shall be subject to those prices in effect at time of shipments. All published and quoted prices are based upon the application of, and all sales are expressly subject to, the Company's Standard Terms and Conditions of Sales are available upon request. This document supersedes all previously published catalog/pricing documents.

Warning

The information provided for Product Interchange in this catalog is for use only as a general reference by persons qualified to recognize unreasonable selection options. Products suggested as substitutes may have dimensional, rating, pricing and other differences from products to be replaced. This selection method must be used in conjunction with the applicable product catalog which contains important precautions and other pertinent information.

In illustrations throughout this catalog, safety guards have been removed for photographic purposes.

© 2022

Warning: Because of the possible danger to person(s) or property from accidents which may result from the improper use of products, it is important that correct procedures be followed: Products must be used in accordance with the engineering information specified in the catalog. Proper installation, maintenance and operation procedures must be observed. The instructions in the instruction manuals must be followed. Inspections should be made as necessary to assure safe operation under prevailing conditions. Proper guards and other suitable safety devices or procedures as may be described or as may be specified in safety codes should be provided, and are neither provided by Baldor Electric nor are the responsibility of Baldor Electric. This unit and its associated equipment must be installed, adjusted and maintained by qualified personnel who are familiar with the construction and operation of all equipment in the system and the potential hazards involved. When risk to persons or property may be involved, a holding device must be an integral part of the driven equipment beyond the speed reducer output shaft.

Dodge Industrial, Inc.
1061 Holland Road, Simpsonville, SC 29681
+1 864 297 4800

dodgeindustrial.com

Dodge Industrial, Inc. reserves all rights in this document and in the subject matter and illustrations contained therein. We reserve the right to modify contents without prior notice and do not accept responsibility for potential errors or possible lack of information in this document. Any reproduction, disclosure to third parties or utilization of its contents–in whole or in parts–is forbidden without prior written consent of Dodge Industrial, Inc.

© Copyright Dodge Industrial, Inc. All rights reserved. Specifications subject to change without notice.
An RBC Bearings company.

9AKK107316 2.22