Dodge Industrial, Inc.
1061 Holland Road, Simpsonville, SC 29681
+1 864 297 4800

dodgeindustrial.com

Dodge Industrial, Inc. reserves all rights in this document and in the subject matter and illustrations contained therein. We reserve the right to modify contents without prior notice and do not accept responsibility for potential errors or possible lack of information in this document. Dodge Industrial, Inc. Terms and Conditions apply. Any reproduction, disclosure to third parties or utilization of its contents–in whole or in parts–is forbidden without prior written consent of Dodge Industrial, Inc.

© Copyright Dodge Industrial, Inc. All rights reserved. Specifications subject to change without notice.
An RBC Bearings company.

CA2QT01-6.22

QUANTIS® Product and Engineering

Catalog

QUANTIS® Product and Engineering

To receive a copy of the Dodge® Bearing Engineering Catalog, Dodge Gearing Engineering Catalog, Dodge Power Transmission Components Engineering Catalog, or Dodge product manuals, contact your local authorized Dodge distributor or www.dodgeindustrial.com.

Member of…

AMERICAN BEARING MANUFACTURERS ASSOCIATION

AMERICAN GEAR MANUFACTURERS ASSOCIATION

CONVEYOR EQUIPMENT MANUFACTURERS ASSOCIATION

MECHANICAL POWER TRANSMISSION ASSOCIATION

POWER TRANSMISSION DISTRIBUTORS ASSOCIATION

NATIONAL ELECTRICAL MANUFACTURERS ASSOCIATION

BEARING SPECIALIST ASSOCIATION

HYDRAULIC INSTITUTE

Member of…

MHI - THE INDUSTRY THAT MAKES SUPPLY CHAINS WORK

NATIONAL STONE, SAND & GRAVEL ASSOCIATION

ELECTRICAL APPARATUS SERVICE ASSOCIATION, INC.

SOCIETY FOR MINING, METALLURGY & EXPLORATION INC.

SOCIETY OF WOMEN ENGINEERS

DODGE products are manufactured in ISO 9001 Certified plants

Prices and data indicated in this document are for your convenience and were correct at time of printing with the exception of clerical and/or printing errors. Possession of this document by any person or company is not to be construed as an offer to sell to him or to anyone else the goods listed herein at the prices stated.

All data and prices are subject to change without notice and shall be subject to those prices in effect at time of shipments. All published and quoted prices are based upon the application of, and all sales are expressly subject to, the Company's Standard Terms and Conditions of Sales are available upon request. This document supersedes all previously published catalog/pricing documents.

WARNING

The information provided for Product Interchange in this catalog is for use only as a general reference by persons qualified to recognize unreasonable selection options. Products suggested as substitutes may have dimensional, rating, pricing and other differences from products to be replaced. This selection method must be used in conjunction with the applicable product catalog which contains important precautions and other pertinent information.

In illustrations throughout this catalog, safety guards have been removed for photographic purposes.

Warning: Because of the possible danger to person(s) or property from accidents which may result from the improper use of products, it is important that correct procedures be followed: Products must be used in accordance with the engineering information specified in the catalog. Proper installation, maintenance and operation procedures must be observed. The instructions in the instruction manuals must be followed. Inspections should be made as necessary to assure safe operation under prevailing conditions. Proper guards and other suitable safety devices or procedures as may be described or as may be specified in safety codes should be provided, and are neither provided by Dodge Industrial nor are the responsibility of Dodge Industrial. This unit and its associated equipment must be installed, adjusted and maintained by qualified personnel who are familiar with the construction and operation of all equipment in the system and the potential hazards involved. When risk to persons or property may be involved, a holding device must be an integral part of the driven equipment beyond the speed reducer output shaft.

Also, see these publications for additional gearing information

Tigear-2
9AKK107393 (CA1604)

- Standard-duty, right-angle worm reducers
- Solid- and hollow-bore shaft options
- Food Safe designs for washdown applications
- Torque ratings up to 6,800 in-lbs

Maxum XTR
9AKK107350 (CA1612)

- Heavy-duty concentric shaft reducers
- Scoop packages featuring Raptor and Grid-Lign couplings
- Torque ratings to 600,000 in-lbs

Torque-Arm, Torque-Arm II and MTA
9AKK107590 (CA1601)

- Heavy-duty, shaft-mount and right-angle reducers
- Twin-taper bushing system
- Torque ratings to 1,000,000 in-lbs

MagnaGear Engineering Catalog
9AKK106913 (CA1610)

- Heavy-duty, right-angle and offset parallel reducers
- Twin-taper bushing systems to an 8in diameter
- Complete drive systems with swing bases, tunnel housings, and base plates
- Torque ratings to 3,500,000 in-lbs

Footnotes

A	Contact Engineering
B	OHL is for standard solid shaft diameters. Reference pages ILH-10, RHB-16 and MSM-10 for optional shaft diameters and hollow shafts. OHL's are applied at one shaft diameter from the shaft shoulder. OHL is calculated for the maximum reducer rating. Larger OHL's may be applied under certain conditions and are subject to application engineering review.
C	Thermal ratings are shown on pages ILH-219, RHB-212 and MSM-180
G	Separate groups 71-112 have four (4) drilled and tapped holes offset from the horizontal/vertical axes by 45 degrees. Separate groups 132-180 have four (4) drilled and tapped holes on the vertical and horizontal axes.
J	Riser Block required
L	All weights shown are without oil. Reference pages ILH-4, RHB-6 and MSM-4 for quantities. The standard factory fill has a density of 7.51 lb/gal (0.8999 kg/liter)
†	Ambient temperatures listed are for lubricant only and do not indicate a particular gear unit's suitability to run in that ambient. Recommendations will be made based on specific application details.

Intro Table of Contents

INTRO-4 Quantis Gearmotors and Reducers
INTRO-5 Features and Benefits
INTRO-7 E-Z Kleen®
INTRO-8 Food Safe
INTRO-9 Input options
INTRO-10 Output options
INTRO-11 Screw-conveyor drives
INTRO-12 Specification and how to order
INTRO-13 Selection
INTRO-16 Service Factors
INTRO-19 Lubrication Options
INTRO-20 Maximum Allowable Weight of motors
INTRO-21 Backstops
INTRO-24 Incline Mountings
ILH-1 In-Line Helical (ILH)
ILH-2 Nomenclature
ILH-4 Mounting Positions and Oil Quantities
ILH-10 Overhung Loads
ILH-12 ILH Selection - 60 Hz
ILH-12 ILH 38
ILH-23 ILH 48
ILH-34 ILH 58
ILH-38 ILH 68
ILH-47 ILH 88
ILH-58 ILH 108
ILH-67 ILH 128
ILH-75 ILH 148
ILH-83 ILH 168
ILH-90 ILH Integral Gearmotors - 60 Hz
ILH-152 ILH Dimensions Outline
ILH-155 Dimensions
ILH-227 Optional output shaft dimensions
ILH-228 Slide base
ILH-229 Scoop mount
ILH-230 Thermal Ratings
ILH-239 Weights
RHB-1 Right-Angle Helical Bevel (RHB)
RHB-2 Nomenclature
RHB-6 Mounting Positions and Oil Quantities
RHB-16 Overhung Loads

Intro Table of Contents
(cont.)

RHB-18 **RHB Selection - 60 Hz**
RHB-18 RHB 38
RHB-21 RHB 48
RHB-27 RHB 58
RHB-30 RHB 68
RHB-36 RHB 88
RHB-42 RHB 108
RHB-48 RHB 128
RHB-54 RHB 148
RHB-60 RHB 168
RHB-66 **RHB Integral Gearmotors - 60 Hz**
RHB-104 **RHB Dimensions Outline**
RHB-108 **Dimensions**
RHB-204 Optional output shafts
RHB-206 Twin-tapered bushings
RHB-211 Screw-conveyor adapter
RHB-213 Shrink disk – foot mounted – metric
RHB-215 Q-Loc bushing
RHB-216 Stainless steel – C-face – solid shaft
RHB-217 Stainless steel – C-face – straight hollow bore
RHB-218 Stainless steel – C-face – Q-loc bushing
RHB-219 **Thermal Ratings**
RHB-228 **Weights**
MSM-1 **Motorized Shaft Mount (MSM)**
MSM-2 **Nomenclature**
MSM-4 **Mounting Positions and Oil Quantities**
MSM-10 **Overhung Loads**
MSM-12 **MSM Selection - 60 Hz**
MSM-12 MSM 38
MSM-16 MSM 48
MSM-20 MSM 58
MSM-28 MSM 68
MSM-37 MSM 88
MSM-46 MSM 108
MSM-55 MSM 128
MSM-63 MSM 148
MSM-73 MSM 168
MSM-80 **MSM Integral Gearmotors - 60 Hz**
MSM-137 **MSM Dimensions Outline**
MSM-138 **MSM Dimensions Outline**

Intro Table of Contents
(cont.)

MSM-139 Dimensions
MSM-187 Optional shaft dimensions
MSM-189 Twin-tapered bushings
MSM-194 Screw conveyor adapter
MSM-196 Metric shrink disk
MSM-197 Q-Loc bushing dimensions
MSM-198 Thermal Ratings
MSM-207 Weights
ACC-1 Accessories
ACC-1 Torque-Arm bracket
ACC-2 Tie rod kit
ACC-3 Banjo Torque-Arm
ACC-5 Torque-Arm bushing
ACC-6 End covers
ACC-8 Additional accessories
ENG-1 Engineering
ENG-1 Additional Quantis selection instructions
ENG-1 Inertia ratio
ENG-2 Assembly and disassembly
ENG-3 NEMA C-face input flange details
ENG-5 IEC D-flange input flange details
ENG-6 IEC input flange details
ENG-7 Separate input – shaft details
ENG-8 Twin-tapered bushings installation
ENG-10 Straight hollow bore Installation
ENG-11 Straight hollow bore – inch shafts dimensions
ENG-12 Straight hollow bore – metric shafts dimensions
ENG-13 Q-Loc installation
ENG-15 Shrink disk installation
ENG-16 RHB Torque-Arm bracket (K) installation
ENG-17 RHB tie rod kit (KR) installation
ENG-18 Torque-Arm mounting installati0on
ENG-19 RHB Banjo Torque-Arm (KT) installation
ENG-20 Modular integral motor system
ENG-21 Integral motors – electrical specifications
ENG-23 Integral motors – brake options – brake lever position
ENG-24 Conduit box mounting positions

Quantis Gearmotors and Reducers

We provide mechanical power transmission products, services and expertise to save energy and improve customers' processes over the total lifecycle of our products, and beyond.

The Quantis product line offers modular gear drives engineered to provide reliable operation for torque requirements from 106 to 122,000 in-lbs (12 to 14,000 Nm). We offer customers three types of gear arrangement: in-line helical (ILH), right-angle helical bevel (RHB), and Motorized shaft mount (MSM). All three gear types are available with integral or C-face motors, and are dimensionally interchangeable with major global competitors.

Dodge Quantis is a leading modular gear reducer for industrial applications.

Low energy consumption

- Up to 98.5 percent efficient per gear stage
- IE3 and NEMA Premium Efficient integral motors

Easy installation and removal

- Clamp-collar style or three-piece coupled inputs facilitate easy motor install and removal
- Optional twin-tapered bushings for easy-on, easy-off shaft mounting

Reliable performance

- Wear-free helical gearing, finish-ground with ellipsoid tooth form
- Class 30 gray iron gearcase housings
- Available two-piece, harsh-duty output seal
- High-capacity cylindrical or tapered roller bearings (check for availability)
- Leak-free performance

Comprehensive offering

- 9 case sizes
- 10:1 constant torque inverter-ready gearmotors and brakemotors
- Ratios up to 7,500:1
- Food industry solutions
  - E-Z Kleen corrosion-resistant washdown
  - Food Safe all-stainless steel
- Flexible mounting options and accessories

Features and Benefits

The Quantis family of products offer customers three types of gear arrangement: in-line helical, right-angle helical bevel, and motorized shaft mount. All three gear types are available with integral and C-face mounted motors, and are dimensionally interchangeable with major global competitors.

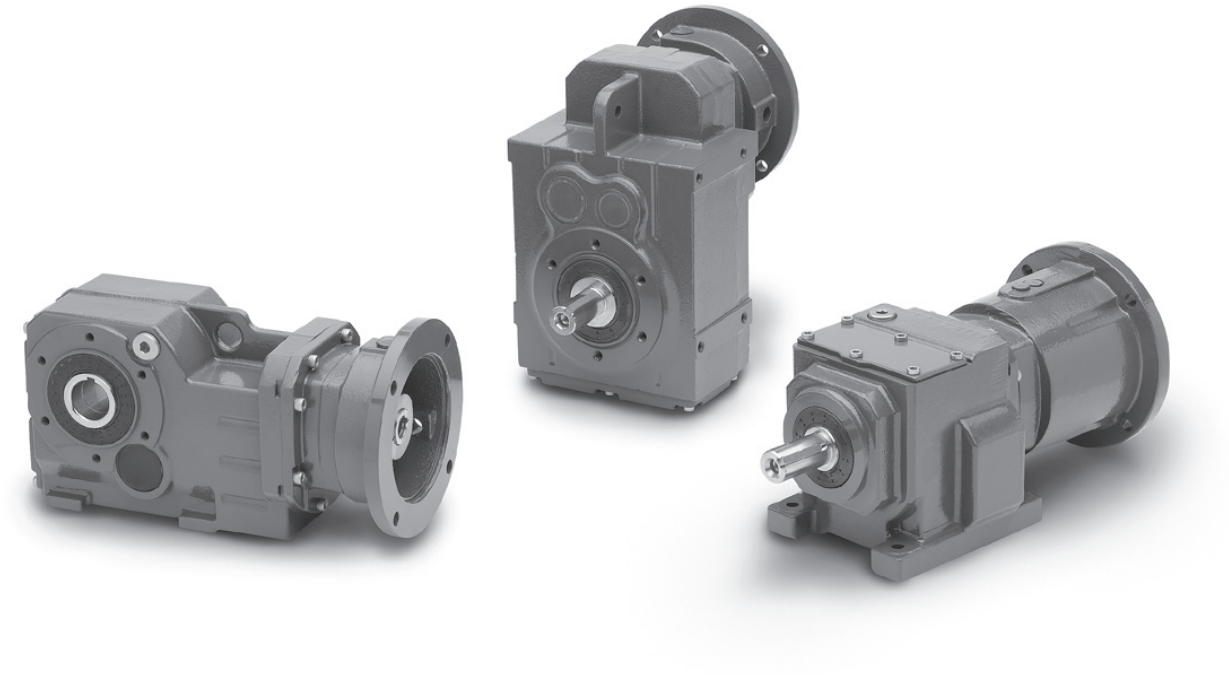

Mechanical

- Nine gearcase sizes, size 38-168
- Gear ratios from 1.4:1 up to 7,500:1
- Input power up to 75 Hp
- Solid-shaft, hollow-bore, tapered-bushing or keyless-bore outputs
- Clamp-collar, three-piece coupled, or input shafts

Electrical

- Integral gearmotor or brakemotor inputs
- IE3 and NEMA Premium Efficient
- 10:1 constant torque inverter ready motors
- Direct-current, short-series holding brakes
- Standard IP55 or optional IP56 enclosures

Dodge Quantis

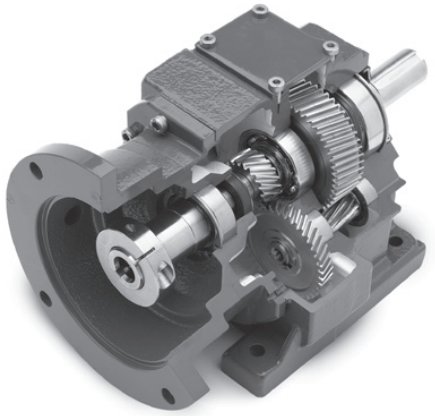

In-line helical

Ideal for applications requiring a solid shaft output, Quantis ILH units provide AGMA class 11 case-hardened and ground-helical alloy steel gears for longer service life. Offers a high-strength cast iron housing and quiet operation. ILH is 98.5 percent efficient per stage and offered in foot or flange housing.

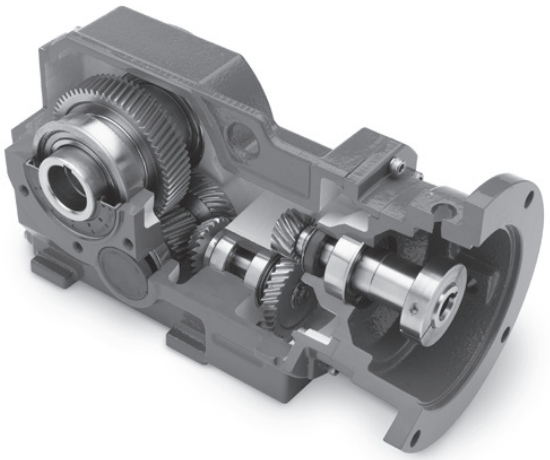

Right angle helical-bevel

This reducer features a helical-bevel/helical-gear train that offers cost-effective, high- and low-speed solutions with efficiency rating of 95.5 percent. RHB has multiple output options including straight- and tapered-hollow bores and single- and double-solid extension shafts.

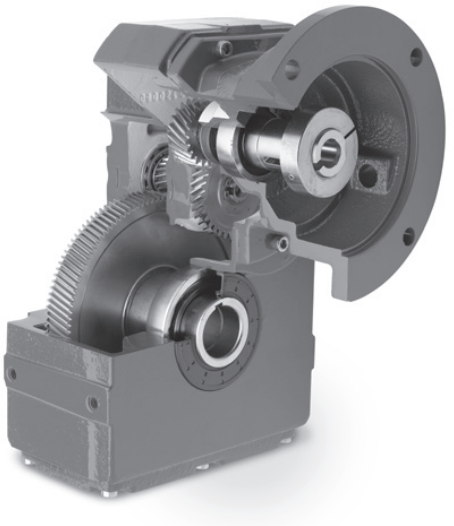

Motorized shaft mount

The MSM product line features a universal housing style for versatile mounting capability. The compact size lends to the flexibility of the reducer. MSM is up to 97 percent efficient. This flexible gear solution offers solid-shaft, hollow-bore, and screw-conveyor drive options.

E-Z Kleen®

The robust protection features of Quantis E-Z Kleen make it the right choice for washdown environments found in food handling, packaging, and pharmaceutical applications. With modular flexibility and IP69 rated protection against high-pressure, high-temperature washdowns, Quantis E-Z Kleen provides long service life and low cost of ownership.

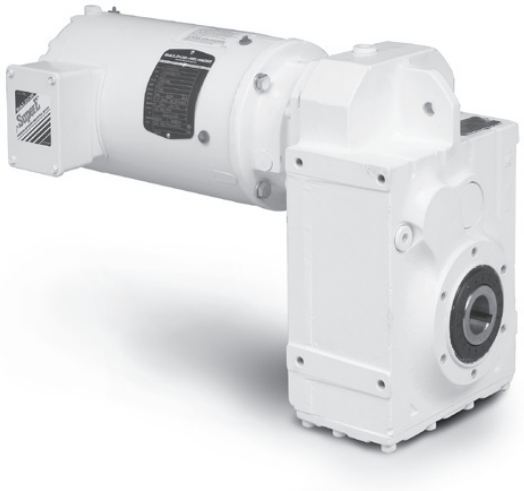

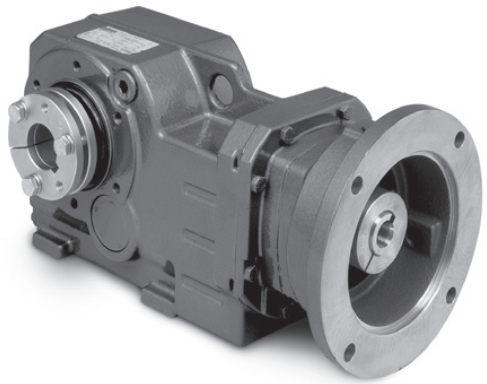

Corrosion resistant

- Unique coating system provides greater than three times the protection of standard epoxy paint
- Thin dense nickel composite (TDNC) plated output shafts

Long lasting

- Wear-free helical and bevel gearing
- Lubed for life
- 3-year standard warranty
- 1-year ingress warranty

Easy on, easy-off

- Clamp-collar or Three-piece coupled inputs
- Twin-taper bushed shaft mounting

EZ-Kleen benefits

- Low cost of ownership
- Less maintenance
- Long service life

Performance Specifications

- 98.5 percent efficient gearing per stage
- 100 bar pressure spray tested, 2-piece output seals
- Output torque rating up to 122,000 in-lbs (14,000 Nm)
- Integral gearmotor (1/2 Hp - 10 Hp) or C-face inputs

Food Safe

The Dodge Quantis Food Safe reducer is a total stainless steel solution engineered to provide ultimate reliability in harsh washdown food and beverage applications. With features designed around food industry sanitation standards, this reducer offers the highest level of performance in the most severe applications. Quantis Food Safe is available in right-angle, helical-bevel sizes 38 and 48.

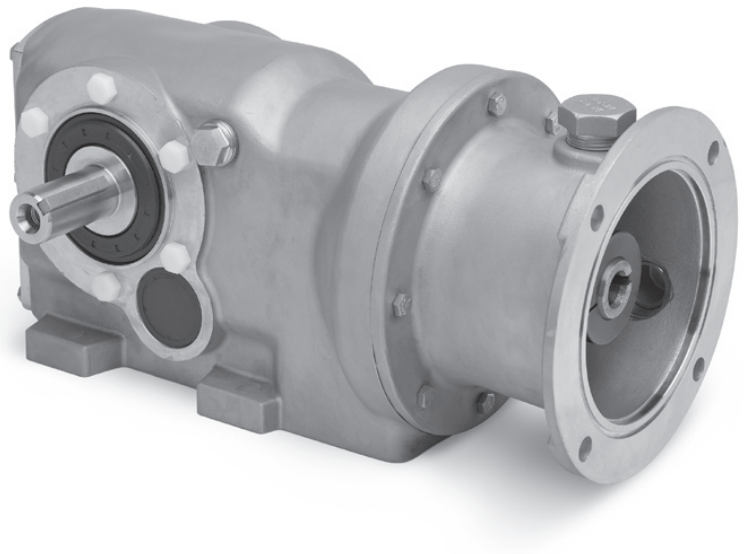

Food safe

- Stainless steel housing
- All stainless steel hardware and shafting
- Factory-filled food grade lubrication

Long lasting

- Water-tight, IP69 liquid ingress protection
- Wear-free helical-bevel gearing
- 3-year warranty
- 1-year ingress warranty

XT harsh duty output seal

- Multiple lip design
- Rubber-coated inner and outer ring
- Best protection for washdown and abrasive materials
- Available on standard and lower protection level offerings

Sanitary

- Rounded design to prevent liquid pooling
- Smooth surface textures
- Laser marked nameplate

Performance specifications

- 95.5 percent efficient gearing
- Ratios up to 179:1
- Stainless steel solid-shaft, straight-hollow bore or Q-Loc keyless bushed shaft-mount outputs

Input options

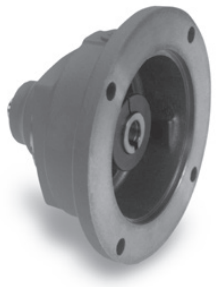

C-face clamp collar

The C-face clamp collar applies to many applications. The length of the input is short allowing for a lower initial cost, as well as saving space. Installing and removing the motor is easy due to the split shaft with a single collar. Offerings include NEMA 56C to 360TC and IEC (B5) 71D to 200D.

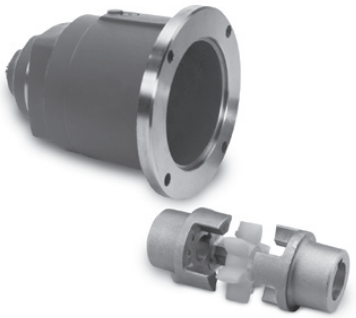

C-face three-piece coupled

This input uses a three-piece coupling that allows for quick and easy motor removal. The coupling is an elastomeric coupling that leads to longer life in high-shock load or stop/start applications. To prevent reverse rotation, a backstop can be installed when using this input option. Offerings are NEMA 56C to 360TC and IEC (B5) 80D to 250D.

Integral motor

The compact design of our integral gearmotors allows customer to save on space and cost. Having internal pinion connections provides a lower initial cost. Horsepower range up to 40 Hp on standard and 10 Hp on EZKleen. Brake motors are also available up to 25 Hp. Technical information for our integral motors can be found on pages ENG-20 through ENG-24.

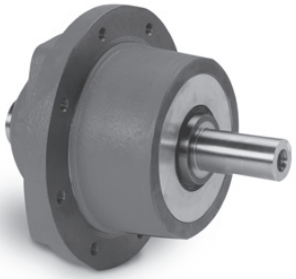

Input shaft (separate)

The solid-input shaft allows flexibility with belt, chain, or direct-coupled motor assemblies. Scoop mounts are available to provide support for the coupled motor and backstops can be installed to prevent reverse rotation. Input shafts are offered in inch and metric. diameters.

Output options

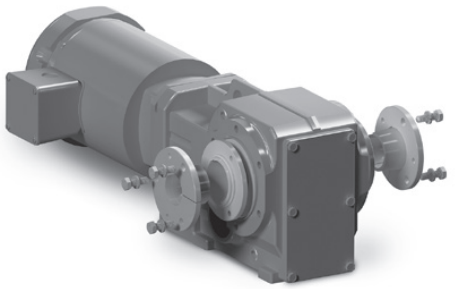

Twin-tapered bushings

Twin-tapered bushings connect the gear reducer to the driven shaft, supporting both sides of the reducer. Because of the ease of installation and removal, no cutting torches are needed and shaft damage is prevented. This easy-on, easy-off, no-wobble bushing system is available in inch and metric bores.

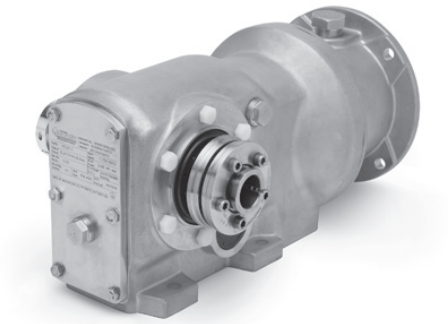

Q-Loc keyless bushing

The Q-Loc bushing system provides customers with the ability to mount the Quantis RHB and MSM product without the need for a shaft key. This reduces the amount of installation time required and allows the customer to use commercial grade shafting. Q-Loc is available in RHB and MSM sizes 38-108 with bore sizes ranging from 1" up to 2-7/16".

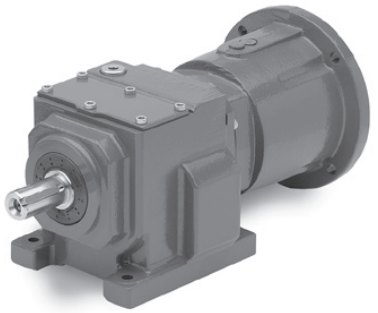

Solid extension

Quantis offers high-strength carbon steel, keyed shafts in both inch or metric. Offerings are single extension and double extension for RHB, and single extension only for ILH and MSM.

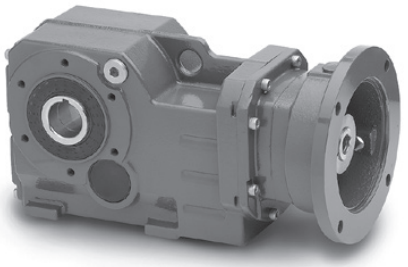

Straight hollow bore

Keyed straight hollow bore provides the customer the ability to shaft mount both RHB and MSM reducers. Bores are available in both inch and metric.

Metric shrink disc

The shrink disc connects a hollow-bore reducer to a driven shaft by tightening on the shaft on one side. The shrink discs are offered in metric bores only.

Screw-conveyor drives

Quantis CEMA screw-conveyor drives feature a rugged, compact design making it the ideal solution where belt drive, guards, and motor mounts are taking up too much space.

The Quantis product line offers modular gear drives engineered to provide reliable operation for torque requirements up to 54,000 in-lbs (6,000Nm). We offer screw-conveyor drives with two types of gear arrangement: right-angle helical bevel (RHB) and Motorized shaft mount (MSM). Each is available with integral or C-face mounted motors, and are interchangeable with major global competitors.

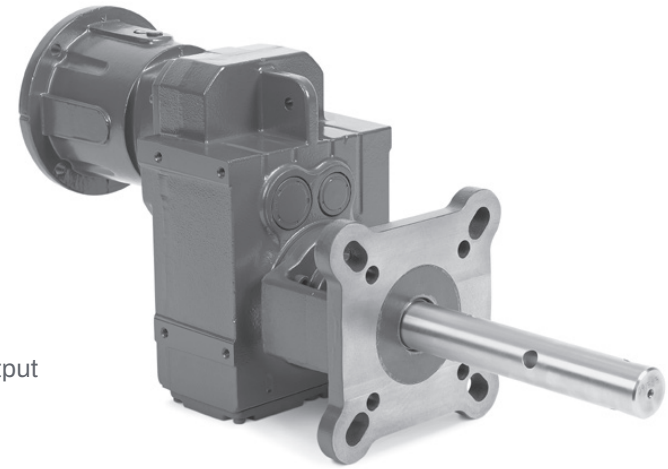

MSM screw conveyor drive

Features

- Compact integral motor or C-face inputs
- CEMA dimensioned mounting
- High-thrust tapered roller bearings on output
- Class 30 grey iron housings

Availability

- RHB or MSM styles
- Sizes 38 up to 128
- Imperial drive shafts from 1.5000” to 3.4375”
- Torque up to 54,000 in-lbs (6,000Nm)

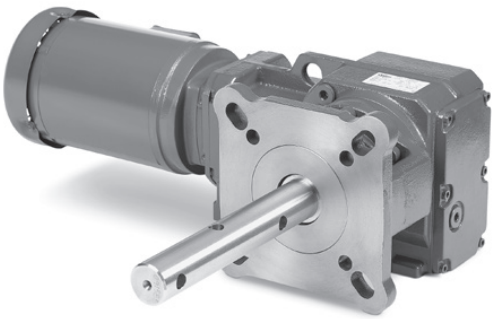

RHB screw conveyor drive

Customer benefits

- Simple to install
- Saves space
- Cost-effective
- Long lasting

Specification and how to order

Quantis Gearmotors and Reducers

The Dodge ILH reducer is available in C-face, separate, or integral gearmotor construction. Footed- or output-flange housing styles allow for multiple mounting options. ILH is available in single, double, triple, four-stage and five-stage reduction.

The Dodge RHB and MSM reducers are also available in C-face, separate, and integral gearmotor construction. Shaft-mount, foot-mount, and output flange-mounted housings styles provide flexible mounting arrangements. MSM reducers are available in double, triple, four-stage, and five-stage reduction.

Reducer housings are constructed of corrosion-resistant, class-30 gray iron with cast internal ribbing for added strength. All housings are cast, while some covers are cast and others are steel. All housings are precision machined to assure accurate alignment for all gear sets.

ILH and MSM gearing is of single helical design and ground to provide an ellipsoid tooth form which eliminates tooth wearing and assures meshing in the strongest tooth area. RHB units also utilize spiral bevel gearing. The bevel gearing is cut and lapped.

All gears are case carburized to insure a high-surface durability and resilient tooth core for greater impact resistance and longer service life.

The input pinion has a shank-pinion design that is assembled by being pressed into place.

Reducer bearings can be the roller or ball type and provide a minimum 10,000-hour average life. All seals are of the spring-loaded type, made of nitrile rubber. Optional Viton seals are available.

Reducer gears and bearings are splash lubricated using an ISO 220 lubricant which provides protection against rust. The standard mineral oil lubricant allows an operating temperature range of 10°F to 105°F (-12°C to 41°C) ambient. Higher or lower ambient temperature conditions are addressed with optional synthetic oil.

C-face reducers are of the coupling type or clamp-collar design so as to eliminate or minimize fretting corrosion between the motor shaft and the reducer stub shaft.

Efficiencies are based on running at the full catalog rating. MSM and ILH units are up to 98.5 percent efficient per stage. RHB units are up to 95.5 percent efficient.

How to order Quantis

ILH, MSM, and RHB reducers and gearmotors have catalog numbers assigned that can be found on the selection pages. Refer to the catalog number when ordering. Always specify:

- Mounting position
- Flange mounting, if applicable
- Accessories/modifications, if required
- Ratio
- Output shaft dimension
- Input speed
- Input power

Selection

Specification / how to order (cont.)

Step 1:

For applications with one start per hour or less and constant load, proceed to Step 2. For applications with more than one start per hour, see engineering page ENG-1 to determine inertia ratio before making a selection. For pulsating (cyclic) loads, contact Application Engineering.

Step 2:

Use Chart 1 to select load classification, and apply to Table 1 in step 3.

Chart 1 – Load classification

Load classification	Driven machine
I Light shocks	Generators, belt conveyors, platform conveyors, auxiliary machine tool drives, turbo blowers, turbo compressors, agitators, and mixers for light uniform density materials
II Moderate shocks	Main machine tool drives slewing gear, cranes, inducted draught fans, mixer, and agitator for materials with variable density, multi cylinder piston pumps, amd metering pumps
III Heavy shocks	Punch presses, shears, Banbury mixers, rolling mill and foundry drives, bucket dredger, heavy centrifugal drives, heavy metering pumps, rotary drilling equipment, briquet presses, pug mills

Step 3: Service factor

The listed service factors in Table 1, apply only when integral electric motors are used as prime motors and are for general industrial applications. It is recommended that the Application Worksheet on page ENG-25 be completed and sent to Application Engineering when any of the following conditions are expected:

- Instantaneous loads exceed 200 percent of the reducer ratings
- Frequent or cyclical speed changes
- Heavy shock loads
- Reversing loads
- Temperature variations
- Prime movers other than electric motors
- Other questionable conditions

Table 1

Daily operation		8 hours			16 hours			24 hours		
Starts/hour		< 10	10 - 200	> 200	< 10	10 - 200	> 200	< 10	10 - 200	> 200
Load classification	I	1.0	1.1	1.2	1.1	1.2	1.3	1.3	1.4	1.5
	II	1.2	1.3	1.4	1.3	1.4	1.5	1.5	1.6	1.7
	III	1.4	1.5	1.6	1.5	1.6	1.7	1.7	1.8	2.0

Selection

Specification / how to order (cont.)

Step 4: Reducer selection:

Option 1 – Horsepower selection method (preferred method for ratios under 300:1)

Determine equivalent horsepower: Using the service factor obtained in Step 3, calculate the equivalent horsepower by multiplying the motor horsepower by the service factor. The electric motor nameplate rating should be used for the motor horsepower.

Equivalent Hp = Motor Hp x Service factor

Calculate required ratio: Divide the motor shaft RPM by the reducer output shaft RPM

Determine unit size: From the rating tables in the catalog, make a reducer selection based on the input RPM, ratio, and equivalent horsepower.

Gearmotor Selection: From the rating tables in this catalog, make gearmotor selection based on output RPM, motor horsepower, and service factor. This will indicate gearcase size, motor frame size, output torque and output OHL capacity.

Option 2 - Required torque selection method (preferred method for ratios over 300:1)

Determine equivalent torque: Multiply the torque required to drive the load at the output of the reducer by the service factor obtained in step 4. (If drive components, e.g. chain or belt drives are used between the reducer and the driven equipment, be sure to account for them when calculating output torque at the reducer.)

Calculate required ratio: Divide the motor shaft RPM by the reducer output shaft RPM.

Determine unit size: Refer to the selection tables and read across from ratio row and down from motor RPM column to select a unit whose output torque rating meets or exceeds the equivalent torque.

Determine required motor horsepower: Calculate the output horsepower using the following equation where the output torque is the torque required to drive the load at the output of the reducer.

Required motor Hp = Output speed x Output torque

63025 x Reducer efficiency

Select motor Hp: From the available motors, select a horsepower that is equal to or greater than the calculated required horsepower. Reducer selections will be torque limited if the motor horsepower is greater than the cataloged Input Hp rating from the selection tables.

Selection

Specification / how to order (cont.)

Step 5: Check thermal rating

Compare the thermal input horsepower rating of the reducer selected to the motor horsepower. Thermal rating should always equal or exceed applied motor horsepower.

Step 6: Check overhung loads by using the following formula:

$$OHL = \frac{126{,}000 \times Hp \times F_C}{PD \times RPM}$$

Where:

- OHL = Overhung load (lbs)
- Hp = Demand horsepower
- Fc = Load connection factor
  - Chain drive: Fc = 1.00
  - Spur or helical gear: Fc = 1.25
  - Synchronous belt drive: Fc = 1.30
  - V-belt drive: Fc = 1.50
  - Flat belt: Fc = 2.50
- PD = Pitch diameter (inches)
- RPM = Revolutions per minute (output)

The calculated OHL must be less than the allowable OHL.

To minimize overhung load and increase bearing life, the load centerline should be located as close to the shaft shoulder as possible. For applications where OHL exceeds catalogued values, use the reducer selection tables to select the next largest size gearcase or contact Application Engineering.

Service Factors

Applications which expose the gear drive to high starting torques, extreme repetitive shock, or where high energy loads must be absorbed as when stalling, require special consideration. Service factors for the special applications should be agreed upon by the user and Dodge since variations of the values in the table may be required.

The service factors in the service factor table are based on the use of an electric or hydraulic motor or the use of a steam or gas turbine as a prime mover. If the prime mover is a single- or multi-cylinder engine, then the service factor must be adjusted in accordance with Table 1.

Table 1

Chart 3 - Conversion table for single or multi-cylinder engines to find equivalent single or multi-cylinder application factor or service factor

Steam and gas turbines, hydraulic or electric motor	Single cylinder engines	Multi- cylinder engines
1.00	1.50	1.25
1.25	1.75	1.50
1.50	2.00	1.75
1.75	2.25	2.00
2.00	2.50	2.25
2.25	2.75	2.50
2.50	3.00	2.75
2.75	3.25	3.00
3.00	3.50	3.25
3.50	4.00	3.75

Table 2 - Service factor

Application	Service 3-10 hrs. / day	Service 10+ hrs / day
Agitators (mixers)		
Pure liquids	1.00	1.25
Liquids and solids	1.25	1.50
Liquid – variable density	1.25	1.50
Blowers		
Centrifugal	1.00	1.25
Lobe	1.25	1.50
Vane	1.25	1.50
Brewing and distilling		
Bottle machinery	1.00	1.25
Brew kettles, (cont.) duty	1.25	1.25
Cookers - (cont.) duty	1.25	1.25
Mash Tubs - (cont.) duty	1.25	1.25
Scale hoppers - frequent starts	1.25	1.50
Can filling machines	1.00	1.25
Car dumpers	1.75	2.00
Car pullers	1.25	1.50
Clarifiers	1.00	1.25
Classifiers	1.25	1.50
Clay working machinery		
Brick press	1.75	2.00
Briquette machines	1.75	2.00
Pug mills	1.25	1.50
Compactors	2.00	2.00
Compressors		
Centrifugal	1.00	1.25
Lobe	1.25	1.50
Reciprocating:		
Multi-cylinder	1.50	1.75
Single cylinder	1.75	2.00
Conveyors – General purpose		
Includes apron, assembly, belt, bucket, chain, flight, oven and screw		
Uniformly loaded or fed	1.00	1.25
Heavy duty – Not Uniformly Fed	1.25	1.50
Severe duty – Reciprocating or shaker	1.75	2.00
Cranes		
Dry dock		
Main hoist	2.50	2.50
Auxiliary hoist	2.50	3.00
Boom hoist	2.50	3.00
Slewing drive	2.50	3.00
Traction drive	3.00	3.00
Container		
Main hoist	3.00	3.00
Boom hoist	2.00	2.00
Trolley drive		
Gantry drive	3.00	3.00
Traction drive	2.00	2.00
Mill Duty		
Main hoist	3.50	3.50
Auxiliary hoist	3.50	3.50
Bridge	3.00	3.00
Trolley travel	3.00	3.00
Industrial duty		
Main hoist	2.50	3.00
Auxiliary hoist	2.50	3.00
Bridge	3.00	3.00
Trolley travel	3.00	3.00
Crushers		
Ore or stone	1.75	2.00
Dredges		
Cable reels	1.25	1.50
Conveyors	1.25	1.50
Cutter head	2.00	2.00
Pumps	2.00	2.00
Screen drives	1.75	2.00
Stackers	1.25	1.50
Winches	1.25	1.50
Elevators		
Bucket	1.25	1.50
Centrifugal discharge	1.00	1.25
Escalators	1.00	1.25
Freight	1.25	1.50
Gravity discharge	1.00	1.25
Extruders		
General	1.50	1.50
Plastics		
Variable speed drive	1.50	1.50
Fixed speed drive	1.75	1.75
Rubber		
Continuous screw operation	1.75	1.75
Intermittent screw operation	1.75	1.75
Fans		
Centrifugal	1.00	1.25
Cooling towers	2.00	2.00
Forced draft	1.25	1.25
Induced draft	1.50	1.50
Industrial and mine	1.50	1.50
Feeders		
Apron	1.25	1.50
Belt	1.25	1.50

Service factor
(cont.)

Application	Service 3-10 hrs. / day	Service 10+ hrs / day
Disc	1.00	1.25
Reciprocating	1.75	2.00
Screw	1.25	1.50
Food Industry		
Cereal cookers	1.00	1.25
Dough mixers	1.25	1.50
Meat grinders	1.25	1.50
Slicers	1.25	1.50
Generators and Exciters	1.00	1.25
Hammer Mills	1.75	2.00
Hoist		
Heavy duty	1.75	2.00
Medium duty	1.25	1.50
Skip hoist	1.25	1.50
Laundry		
Tumblers	1.25	1.50
Washers	1.50	2.00
Lumber Industry		
Barkers – Spindle feed	1.25	1.50
Main drive	1.75	1.75
Conveyors – Burner	1.25	1.50
Main or heavy duty	1.50	1.50
Main log	1.75	2.00
Re-saw merry-go-round	1.25	1.50
Conveyor		
Slab	1.75	2.00
Transfer	1.25	1.50
Chains		
Floor	1.50	1.50
Green	1.50	1.75
Cut-Off Saws		
Chain	1.50	1.75
Drag	1.50	1.75
Debarking drums	1.75	2.00
Feeds		
Edger	1.25	1.50
Gang	1.75	1.75
Trimmer	1.25	1.50
Log deck	1.75	1.75
Log hauls – incline, well type	1.75	1.75
Log turning devices	1.75	1.75
Planer feed	1.25	1.50
Planer tilting hoists	1.50	1.50
Rolls – live - off bearing - roll cases	1.75	1.75
Sorting table, tipple hoist	1.25	1.50
Lumber Industry (cont.)		
Tipple hoist	1.25	1.50
Transfer		
Chain	1.50	1.75

Application	Service 3-10 hrs. / day	Service 10+ hrs / day
Craneway	1.50	1.75
Tray drives	1.25	1.50
Veneer lathe drives	1.25	1.50
Metal mills		
Draw bench carriages & main drives	1.25	1.50
Runout table		
Non-reversing		
Group drives	1.50	1.50
Individual drives	2.00	2.00
Reversing	2.00	2.00
Slab pushers	1.50	1.50
Shears	2.00	2.00
Wire drawing	1.25	1.50
Wire winding machine	1.50	1.50
Metal strip processing machinery		
Bridles	1.25	1.50
Coilers and uncoilers	1.00	1.25
Edge trimmers	1.25	1.50
Flatteners	1.25	1.50
Loopers (accumulators)	1.00	1.25
Pinch rolls	1.25	1.50
Scrap choppers	1.25	1.50
Shears	2.00	2.00
Slitters	1.25	1.50
Mills, rotary type		
Ball and rod		
Spur ring gear	2.00	2.00
Helical ring gear	1.50	1.50
Direct connected	2.00	2.00
Cement kilns	1.50	1.50
Dryers and coolers	1.50	1.50
Mixers		
Concrete	1.25	1.50
Paper mills		
Agitator (mixer)	1.50	1.50
Agitator for pure liquids	1.25	1.25
Barking drums	2.00	2.00
Barkers – mechanical	2.00	2.00
Beater	1.50	1.50
Breaker stack	1.25	1.25
Calendar (3)	1.25	1.25
Chipper	2.00	2.00
Chip feeder	1.50	1.50
Coating rolls	1.25	1.25
Paper mills (cont.)		
Conveyors		
Chip, bark, chemical	1.25	1.25
Logs (including slab)	2.00	2.00
Couch rolls	1.25	1.25
Cutter	2.00	2.00

Application	Service 3-10 hrs. / day	Service 10+ hrs / day
Cylinder molds	1.25	1.25
Dryers (3)		
Paper machine	1.25	1.25
Conveyor type	1.25	1.25
Embosser	1.25	1.25
Extruder	1.50	1.50
Fourdrinier rolls (Includes lump breaker, dandy roll, wire turning and return rolls	1.25	1.25
Jordan	1.50	1.50
Kiln drive	1.50	1.50
Mt. Hope rolls	1.25	1.25
Paper rolls	1.25	1.25
Platter	1.50	1.50
Presses – felt & suction	1.25	1.25
Pulper	2.00	2.00
Pumps – vacuum	1.50	1.50
Reel (surface type)	1.25	1.25
Screens		
Chip	1.50	1.50
Rotary	1.50	1.50
Vibrating	2.00	2.00
Size press	1.25	1.25
Super calender	1.25	1.25
Thickener		
AC motor	1.50	1.50
DC motor	1.25	1.25
Washers		
AC motor	1.50	1.50
DC motor	1.25	1.25
Wind and unwind stand	1.00	1.00
Winders (surface type)	1.25	1.25
Yankee dryer	1.25	1.25
Plastic industry		
Primary processing		
Intensive internal mixers		
Batch mixers	1.75	1.75
Continuous mixers	1.50	1.50
Batch drop mill – 2 smooth rolls	1.25	1.25
Continuous feed, holding and blend mill	1.25	1.25
Compounding mill	1.25	1.25
Calenders	1.50	1.50
Plastic industry (cont.)		
Secondary processing		
Blow molders	1.50	1.50
Coating	1.25	1.25
Film	1.25	1.25
Pipe	1.25	1.25
Pre-plasticizers	1.50	1.50
Rods	1.25	1.25
Sheet	1.25	1.25

Service factor
(cont.)

Application	Service 3-10 hrs. / day	Service 10+ hrs / day
Tubing	1.75	2.00
Pullers – barge haul	1.25	1.50
Pumps		
Centrifugal	1.00	1.25
Proportioning	1.25	1.50
Reciprocating		
Single acting, 3 or more cylinders	1.25	1.50
Double acting, 2 or more cylinders	1.25	1.50
Rotary		
Gear	1.00	1.25
Lobe	1.00	1.25
Vane	1.00	1.25
Rubber industry		
Intensive internal mixers		
Batch mixers	1.75	1.75
Continuous mixers	1.50	1.50
Mixing mill – 2 smooth rolls	1.50	1.50
(If corrugated rolls are used, then use the same service factors that are used for a cracker warmer)		
Batch drop mill – 2 smooth rolls	1.50	1.50
Cracker warmer – 2 rolls; 1 corrugated roll	1.75	1.75
Cracker – 2 corrugated rolls	2.00	2.00
Holding, feed and blend mill – 2 rolls	1.25	1.25
Refiner – 2 rolls	1.50	1.50
Calenders	1.50	1.50
Sand muller	1.25	1.50
Screens		
Air washing	1.00	1.25
Rotary – sand or gravel	1.25	1.50
Traveling water intake	1.00	1.25
Sewage disposal		
Bar screens	1.25	1.25
Chemical feeders	1.25	1.25
Dewatering screens	1.50	1.50
Scum breakers	1.50	1.50
Slow or rapid mixers	1.50	1.50
Sludge collectors	1.25	1.25
Thickeners	1.50	1.50
Vacuum filters	1.50	1.50
Sugar industry		
Beet slicer	2.00	2.00
Cane knives	1.50	1.50
Crushers	1.50	1.50
Mills (low speed end)	1.75	1.75
Textile industry		
Batchers	1.25	1.50
Calenders	1.25	1.50
Card	1.25	1.50

Application	Service 3-10 hrs. / day	Service 10+ hrs / day
Dry cans	1.25	1.50
Dryers	1.25	1.50
Dyeing machinery	1.25	1.50
Looms	1.25	1.50
Mangles	1.25	1.50
Nappers	1.25	1.50
Pads	1.25	1.50
Slashers	1.25	1.50
Soapers	1.25	1.50
Spinners	1.25	1.50
Tenter frames	1.25	1.50
Washers	1.25	1.50
Winders	1.25	1.50

Lubrication Options

The list below shows lubricants that are available as factory fill in Quantis reducers. The standard factory fill lubricant is Mobilgear 600 XP 220, which is a high-performance mineral oil lubricant with special additives for use in industrial gear products.

Ambient temperature	Oil type	ISO viscosity grade	Available oils	Available food grade oils (NSF H1)	Compatible Seals
10°F to 105°F (-12°C to 41°C)	Mineral Oil	220	Mobilgear 600 XP220 (standard fill *)		Nitrile (NBR) Seal Harsh Duty (XT) Nitrile Seal
45°F to 105°F (7°C to 41°C)	Mineral Oil	460		Chevron FM 460	Harsh Duty (XT) Nitrile Seal and Nitrile (NBR) Seal
-20°F to 50°F (-29°C to 13°C)	Synthetic	68	Mobil SHC 626		Viton (FKM) Seal
-30°F to 14°F (-35°C to -10°C)	Synthetic	150	Mobil SHC 629		Viton (FKM) Seal
-10°F to 115°F (-23°C to 46°C)	Synthetic	220	Mobil SHC 630		Viton (FKM) Seal
30°F to 140°F (-0°C to 60°C)	Synthetic	460	Mobil SHC 634		Viton (FKM) Seal

* Previous factory fill oil was Mobilgear 630 – Mobilgear 600 XP220 and Mobilgear 630 are completely compatible with each other and do not require a flush.

Ambient temperatures listed are for lubricants only and do not indicate a particular gear unit's suitability to run in that ambient. Contact Application Engineering for application assistance.

All reducers are factory filled according to the mounting position indicated on the order. If the mounting position is changed from the ordered mounting position, the oil level must be changed. The oil volumes shown in the mounting position charts are approximate. The correct oil level is determined by the oil level hole in the housing except for size 38 reducers. If the reducer is ordered with the standard mineral oil and the oil is later changed to synthetic oil, it is recommended the shaft seals be changed to Viton (FKM) material.

ILH, MSM, and RHB reducers are furnished with oil level, drain, and fill plugs except for the size 38, which only has a fill plug. Before starting operation, the breather must be located in the correct location.

Continued operation in cold ambient conditions requires special modifications. Please contact Application Engineering for application assistance.

The density of the standard factory fill oil is 0.93 lbs/pint (1.98 lbs/liter).

Maximum Allowable Weight of motors

on Quantis C-face reducers

When using Quantis reducers with C-face inputs, the load from the weight of the motor, plus any brakes, clutches, or other hardware, must be compared to the maximum allowable load. Failure to check the load may result in product failure and injury. The table below lists the maximum allowable load for applications without external shock loading. The information below the table shows how to calculate the actual load. If unsure on how to perform this check, please contact Dodge Application support. If the calculated load exceeds the maximum allowable load, it is recommended that a separate-input style reducer and foot mounted motor be used. If a C-face input style must be used, then the motor must be supported independently from the reducer. The motor feet must be shimmed by qualified personnel to avoid putting forces on the reducer.

Unit size		Maximum allowable load
ILH or MSM	RHB	
38	38 - 48	1900
48	58-68	1950
58	–	2600
68	88	3300
88	108	6300
108	128	9400
128	148	16600
148	168	25000
168	–	26000

The actual load is calculated by multiplying the distance from the C-face mounting flange on the reducer, Point "A", to the center of weight of each device, then adding all of the values together. All distances need to be in inches and the weights need to be in pounds.

B = Length of the input assembly. This equals the **ZC** value which is shown on the dimensions pages for each reducer and input size combination.

C = Width of the clutch. (If a clutch is not used, ignore this item) C/2 (C divided by 2) is the distance from the clutch mounting flange to the center of weight for the clutch

D = Width of the main body of the motor. This information can be obtained from the motor manufacturer – it is typically the "C" dimension minus the length of the input shaft. D/2 (D divided by 2) is the distance from the motor mounting flange to the center of weight for the motor. If a clutch is located between the motor and reducer, the length of the clutch, "C", must be added to D/2 when calculating the load.

E = Width of the brake (if a brake is not used, ignore this item). The center of weight for the brake can be determined by dividing the total width of the brake by 2 (E/2). The width of the clutch, "C", and the width of the motor, "D", must be added to E/2 when calculating the load.

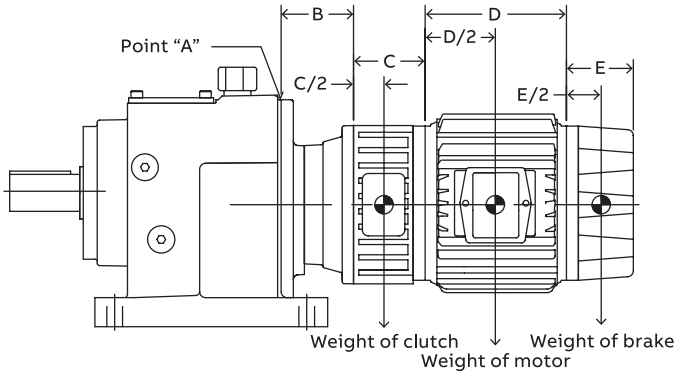

Example of an application with a clutch, motor and brake, mounted on a Size 48 RHB footed reducer with solid output shaft with a 140TC clamp collar input:

For this example:

Width of the clutch, "C" is 3.6"
Clutch weight is 13.3 Lbs.
Width of the main body of the motor, "D", is 11.4"
Motor weight is 44 Lbs.
Width of the brake, "E", is 4.0"
Brake weight is 18.5 Lbs.

B = ZC from page RHB-103 = **4.17"**

C/2 = Clutch width ÷ 2 = 3.6 ÷ 2 = **1.8"**

D/2 = Motor main body width ÷ 2 = 11.4 ÷ 2 = **5.7"**

E/2 = Brake width ÷ 2 = 4.0 ÷ 2 = **2.0"**

Calculation of the loads from each component –

For each calculation, the distance from the center of weight from each component to Point "A" is multiplied by the weight of the component.

The load from the weight of the clutch = ("B" + "C/2") x clutch weight

The load from the weight of the clutch = ("B" + "C/2") x clutch weight = (4.17 + 1.8) x 13.3 = **79 in-lbs**

The load from the weight of the motor = ("B" + "C" + "D/2") x motor weight = (4.17 + 3.6 + 5.7) x 44 = **593 in-lbs**

The load from the weight of the brake = ("B" + "C" + "D" + "E/2") x brake weight = (4.17 + 3.6 + 11.4 + 2.0) x 18.5 = **392 in-lbs**

The total load is the sum of the component loads and equals **79 + 593 + 392 = 1,064 in-lbs**. The allowable load for a size 48, RHB = 1,900, so this combination of components is acceptable for an application without external shock loading.

If this example did not have a clutch or brake, then the load from the motor would be calculated as:

The load from the weight of the motor = ("B" + "D/2") x motor weight = (4.17 + 5.7) x 44 = **434 in-lbs**

Backstops

Backstops are available as an option, with three-piece coupled or separate input assemblies, for applications that require the prevention of reverse rotation. Backstops are internally mounted in the input assembly by the factory and cannot be reversed in the field. The backstops are premium, lift-off style, and require a minimum input shaft speed to operate correctly. After the lift-off speed is exceeded, the backstops do not have any rubbing components and do not generate any heat. Backstops should not be used for applications when the input shaft speed is below the lift-off speed.

When ordering a reducer equipped with a backstop, it is necessary to indicate on the order the desired direction of rotation of the output shaft. The backstop cannot be reversed in the field after it is assembled into the reducer. **The direction of rotation is defined by looking at the end of the output shaft**.

On RHB style reducers, it is also necessary to indicate from which side of the reducer, “A” side or “B” side, the shaft is being viewed. (“A” and “B” side is shown on the following page and on the mounting position pages). This also applies to straight-hollow shaft, twin-tapered bushing, and shrink-disk configurations except as noted.

To calculate the maximum allowable torque (peak torque) the backstop will hold at the output shaft, multiply the overall ratio of the reducer by the maximum allowable torque listed below. The nominal torque rating of the backstop is half of the peak value. **Note: Other internal components may limit the amount of torque the reducer can apply. Always limit the nominal torque load to the smaller of the reducer torque rating (listed in the selection pages) or nominal torque rating of the backstop.**

Three-piece coupled	Separategroup	Lift-off speed (RPM)	Max. allowable torque (ft-lb)
56C	71	890	53
—	80	820	221
140TC	90	820	221
180TC	100	750	279
—	112	750	236
210TC	132	670	590
250TC	160	670	590
280TC	180	610	959
320TC	225	610	959
360TC	250	610	959

Backstops
(cont.)

Product	Unit size	Number of reduction stages	Output shaft direction of rotation looking at the exposed end of the output shaft	Output shaft location side and view	Input shaft rotation looking at theexposed end of the input shaft
ILH	38-88	1	CW	–	CW
ILH	38-88	1	CCW	–	CCW
ILH	38-168	2	CW	–	CCW
ILH	38-168	2	CCW	–	CW
ILH	38-168	3	CW	–	CW
ILH	38-168	3	CCW	–	CCW
ILH	38-168	4	CCW	–	CW
ILH	38-168	4	CW	–	CCW
ILH	38-168	5	CW	–	CW
ILH	38-168	5	CCW	–	CCW
RHB	38-88	3	CW	A	CW
RHB	38-88	3	CCW	A	CCW
RHB	38-88	3	CW	B*	CW
RHB	38-88	3	CCW	B*	CCW
RHB	108-168	3	CW	A	CCW
RHB	108-168	3	CCW	A	CW
RHB	108-168	3	CW	B	CW
RHB	108-168	3	CCW	B	CCW
RHB	48-88	4	CW	A	CCW
RHB	48-88	4	CCW	A	CW
RHB	48-88	4	CW	B	CCW
RHB	48-88	4	CCW	B	CW
RHB	108-168	4	CW	A	CW
RHB	108-168	4	CCW	A	CCW
RHB	108-168	4	CCW	B	CW
RHB	108-168	4	CW	B	CCW
RHB	48-88	5	CW	A	CW
RHB	48-88	5	CCW	A	CCW
RHB	48-88	5	CW	B	CW
RHB	48-88	5	CCW	B	CCW
RHB	108-168	5	CCW	A	CW
RHB	108-168	5	CW	A	CCW
RHB	108-168	5	CW	B	CW
RHB	108-168	5	CCW	B	CCW
MSM	38-168	2	CW	A	CCW
MSM	38-168	2	CCW	A	CW
MSM	38-168	3	CW	A	CW
MSM	38-168	3	CCW	A	CCW
MSM	68-168	4	CCW	A	CW
MSM	68-168	4	CW	A	CCW
MSM	68-168	5	CW	A	CW
MSM	68-168	5	CCW	A	CCW

* Does not apply to hollow, twin tapered bushing, or double extended shafts.
For these configurations, specify the direction of rotation by looking at the A side.

Backstops
(cont.)

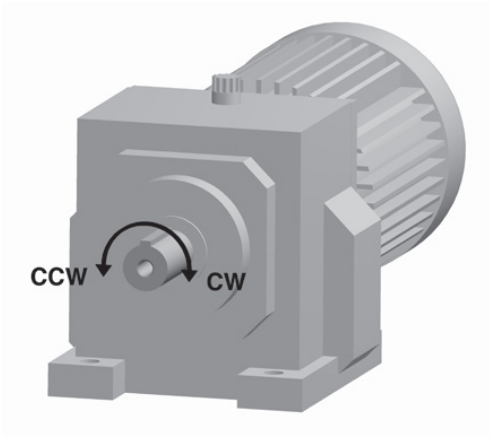

ILH

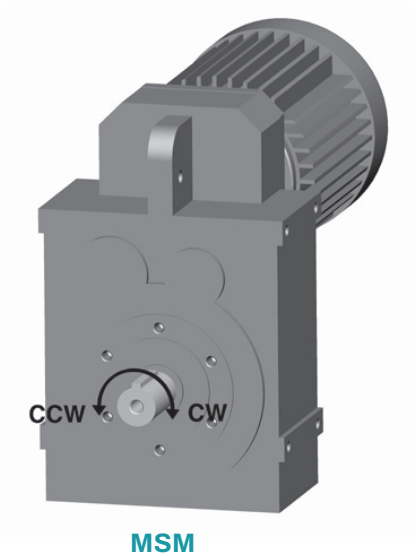

MSM

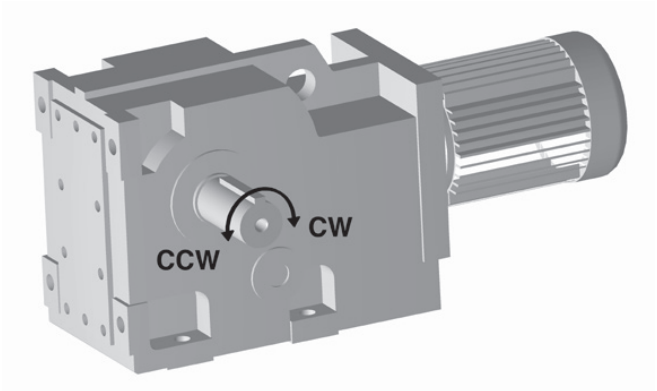

RHB - A-SIDE

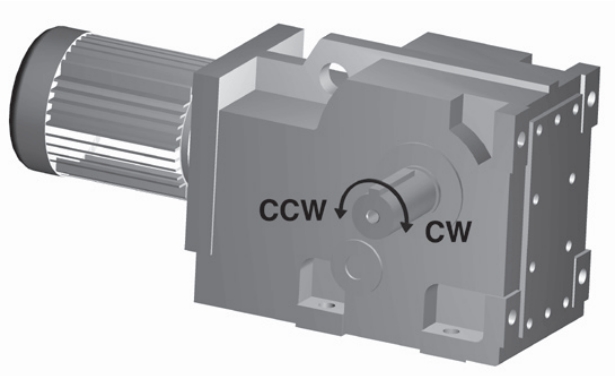

RHB - B-SIDE

Warning

Backstops are not to be used for applications involving energy absorption and shock or torque loads in excess of reducer ratings or on applications such as chair lifts, amusement rides, etc. and where the safety of persons or property is dependent on the function. On such applications, other holding devices must be provided.

Incline Mountings

Dodge Quantis reducers can be modified to permit mounting in positions other than the standard mounting positions shown in the mounting position charts including inclined and tilted positions. Consult Application Engineering to determine what modifications are required for your specific application.

In order for Dodge to make recommendations on the required modifications, the following information must be provided:

- Reducer size
- Ratio
- Input and/or output speed
- Transmitted horsepower
- Duty cycle – continuous vs. intermittent operation. If intermittent, running time vs. idle time.
- Mounting position, such as A1, A2. . . A6 with shafts level, a complete description of the mounting arrangement including the angle of tilt of the housing, the incline of the shafts and whether the output shaft is higher or lower than the input shaft.

For the example shown here - the unit would be called out with a CW rotation from a A1 mounting position of 30 degrees (Angle β). This illustration represents a typical arrangement for a tilted reducer. The proper oil level will vary with reducer size, ratio, input speed, and angle of tilt. Consult Dodge for proper oil level.

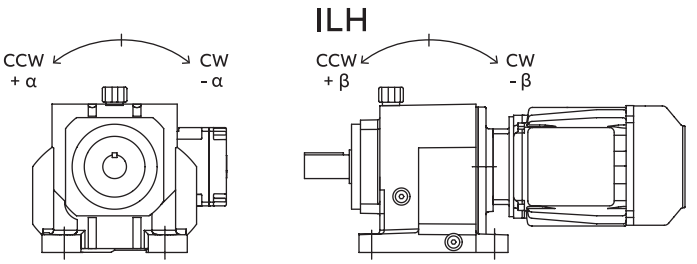

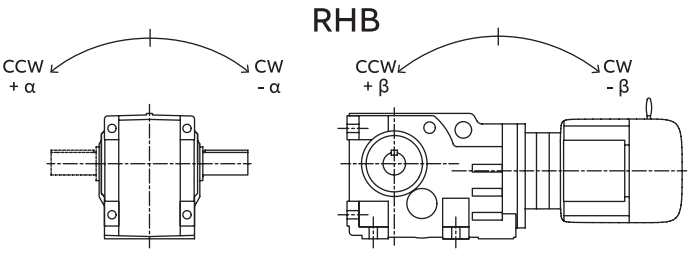

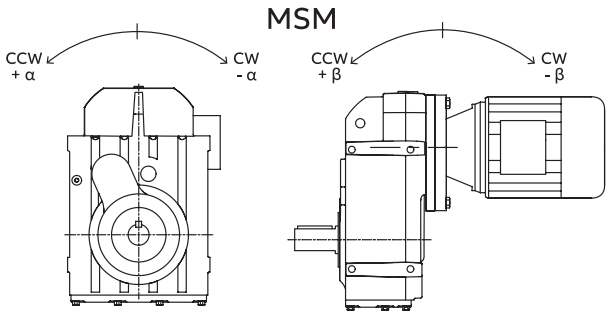

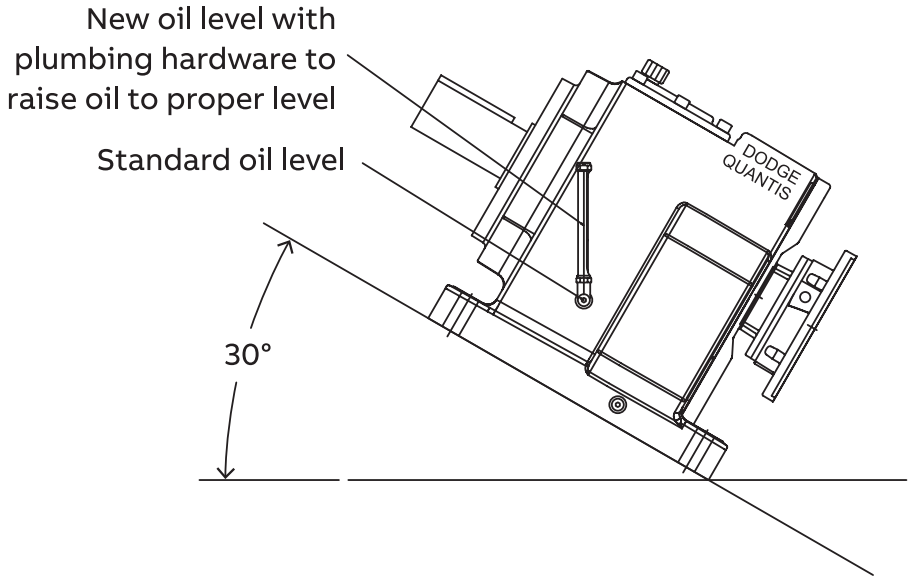

Notes

In-Line Helical (ILH)

ILH Table of Contents

ILH-2	**Nomenclature**
ILH-4	**Mounting Positions and Oil Quantities**
ILH-10	**Overhung Loads**
ILH-12	**ILH Selection - 60 Hz**
ILH-12	ILH 38
ILH-23	ILH 48
ILH-34	ILH 58
ILH-38	ILH 68
ILH-47	ILH 88
ILH-58	ILH 108
ILH-67	ILH 128
ILH-75	ILH 148
ILH-83	ILH 168
ILH-90	**ILH Integral Gearmotors - 60 Hz**
ILH-152	**ILH Dimensions Outline**
ILH-155	**Dimensions**
ILH-227	Optional output shaft dimensions
ILH-228	Slide base
ILH-229	Scoop mount
ILH-230	**Thermal Ratings**
ILH-239	**Weights**

Nomenclature

In-line helical (ILH)

Single, Double, triple, four- and five-stage reduction

	1	2	3	4	5	6	7	/	8	9	10	10a	10b	11	11a
Ex:	H	B	88	4	C	N	180TC	/	1226.26	A1	S	I	2.125	–	–
Ex:	H	F	38	2	S	I	71	/	4.77	A1	S	I	1.000	B5	160 mm
Ex:	H	B	48	2	G	H	71E4	/	31.77	A4	S	I	1.250	–	–

1. **Product type**
   H = ILH

2. **Output configuration**
   B = Foot mounted
   F = Flange mounted

3. **Unit size**

38	48	58	68	88
108	128	148	168	

4. **Stage of reduction**
   1 = Single reduction
   2 = Double reduction
   3 = Triple reduction
   4 = 4 stage reduction
   5 = 5 stage reduction

5. **Input configuration**
   C = C-face clamp collar
   L = C-face 3 pc coupling
   S = Separate
   G = Integral gearmotor

6. **Motor type**
   N = NEMA C-face
   I = IEC C-face
   H = Integral Hp
   K- Integral kW

   Separate input
   I = Inch
   M = Metric

7. **Motor frame**

NEMA C-Face

56C	140TC	180TC	210TC
250TC	280TC	320TC	360TC

IEC C-Face

71D	80D	90D	100D	112D	132D
160D	180D	200D	225D	250D	

Separate

71	80	90	100	112
132	160	180	225	250

Integral gearmotor

71C4	.25 Hp	90I4	2 Hp	160P4	15 Hp
71D4	.33 Hp	100J4	3 Hp	160Q4	20 Hp
71E4	.50 Hp	112L4	5 Hp	180R4	25 Hp
80F4	.75 Hp	132M4	7.5 Hp	180S4	30 Hp
80G4	1 Hp	132N4	10 Hp	200T4	40 Hp
90H4	1.5 Hp				

8. **Ratio** (use actual ratio from selection pages)

9. **Mounting positions** (see pages ILH-4 through ILH-9)

A1	A2	A3
A4	A5	A6

10. **Output shaft type**
    S = Single extension solid shaft

10a. **Output shaft dimension**
    I = Inch
    M = Metric

ILH

Single, Double, triple, four- and five-stage reduction

	1	2	3	4	5	6	7	/	8	9	10	10a	10b	11	11a	12
Ex:	H	B	88	4	C	N	180TC	/	1226.26	A1	S	I	2.125	–	–	
Ex:	H	F	38	2	S	I	71	/	4.77	A1	S	I	1.000	B5	160 mm	
Ex:	H	B	48	2	G	H	71E4	/	31.77	A4	S	I	1.250	–	–	—

10b. Output shaft dimension

Single / double extension solid shaft

	Std	Optional
ILH 38	0.875	20 mm
ILH 48	1.125	25 mm
ILH 58	NA	NA
ILH 68	1.375	30 mm
ILH 88	1.625	40 mm

Double/triple/4 stage/5 stage reduction

	Std	Optional		Std	Optional
ILH 38	1.000	1.250		25 mm	30 mm
ILH 48	1.250	1.375	1.625	30 mm	40 mm
ILH 58	1.375	1.625		35 mm	
ILH 68	1.625	2.125		40 mm	50 mm
ILH 88	2.125	2.375		50 mm	60 mm
ILH 108	2.375	2.875		6 0mm	70 mm
ILH 128	2.875	3.625		70 mm	90 mm
ILH 148	3.625	4.000		90 mm	100 mm
ILH 168	4.000	4.750		100 mm	120 mm

11. Output flange type (HF style housing)

B5
B14 (std)
NEMA (Single reduction)

11a. Output flange diameter

Single reduction

	B14 flange	B5 flange	NEMA flange
ILH 38	120mm	160 mm	140TC
		200 mm	
ILH 48	120mm	160 mm	180TC
		200 mm	
ILH 58	NA	NA	NA
ILH 68	160mm	200 mm	210TC
		250 mm	
ILH 88	190mm	250 mm	–
		300 mm	

Double/triple/4 stage/5 stage reduction

	B14 flange		B5 flange
ILH 38	120 mm	160 mm	200 mm
			200 mm
ILH 48	160 mm	200 mm	250 mm
ILH 58	160 mm	200 mm	250 mm
ILH 68	190 mm	250 mm	300 mm
ILH 88	245 mm	300 mm	350 mm
ILH 108	300 mm	350 mm	450 mm
ILH 128	340 mm	350 mm	450 mm
ILH 148	340 mm	450 mm	550 mm
ILH 168	400 mm	450 mm	550 mm

12. Integral motor brake options

See page ENG-23

Mounting Positions and Oil Quantities

ILH C-face reducers and integral gearmotors

These mounting arrangements are for all output configurations and output shaft types. **Important! When ordering, please specify mounting position for correct oil quantity.** In cases of mounting position other than shown here with regard to the oil quantity, please reference the Incline Mounting page, INTRO-24, and contact Application Engineering.

NOTE: The oil volumes shown are approximate values and cannot be used to correctly set the reducer oil level – **always** fill the reducer to the correct oil level plug and recheck in 1 week.

A1

Unit size	Reduction stage	Pints	Liters
38	1	0.3	0.2
	2	1.1	0.5
	3	1.1	0.5
48	1	0.5	0.3
	2	2.3	1.1
	3	2.3	1.1
58	2	3.2	1.5
	3	3.2	1.5
68	1	1.1	0.5
	2	3.8	1.8
	3	3.6	1.7
88	1	1.6	0.8
	2	8.7	4.1
	3	8.5	4.0
108	2	14.2	6.7
	3	13.7	6.5
128	2	19.0	9.0
	3	18.4	8.7
148	2	25.8	12.2
	3	24.7	11.7
168	2	39.7	18.8
	3	38.3	18.1

Oil level Ventilation Oil drain

A1 **Horizontal – floor mount**

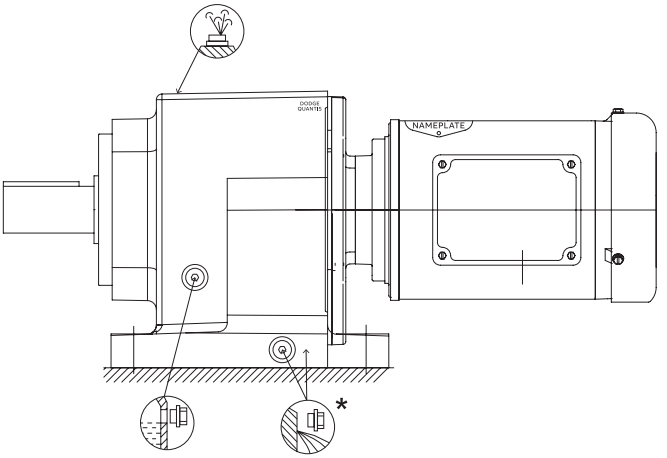

A1

Unit size	Reduction stage	Input reducer pints	Input reducer liters	Primary reducer pints	Primary reducer liters
38	4	0.3	0.2	1.6	0.8
	5	1.1	0.5	1.6	0.8
48	4	0.3	0.2	4.5	2.1
	5	1.1	0.5	4.5	2.1
68	4	0.3	0.2	7.9	3.7
	5	1.1	0.5	7.9	3.7
88	4	0.5	0.3	19.2	9.1
	5	2.3	1.1	19.2	9.1
108	4	0.5	0.3	24.4	11.6
	5	2.3	1.1	24.4	11.6
128	4	1.1	0.5	36.9	17.5
	5	2.3	1.1	36.9	17.5
148	4	1.1	0.5	54.8	25.9
	5	2.3	1.1	54.8	25.9
168	4	1.1	0.5	80.4	38.0
	5	3.8	1.8	80.4	38.0

A1 **Horizontal – floor mount**

Sizes 48 to 88

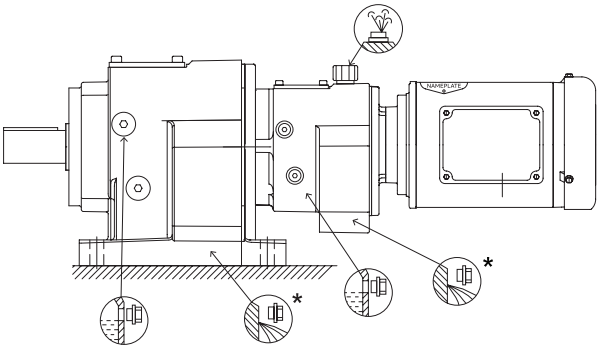

Fill hole for Sizes 108 to 168

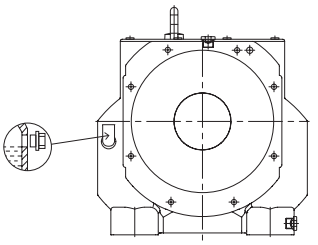

Note: Output reducer sizes 148-168 require pipe extension

Note: ILH 38 units are sealed for life and furnished with only one plug for filling and draining.

Four- and five-stage reduction reducer consists of two reducers assembled to each other, the Input Reducer and the Primary Reducer. The reducers are sealed from each other and require different oil levels per the chart.

* Hole location on opposite side of reducer.

ILH mounting positions and oil quantities

C-face reducers and integral gearmotors

These mounting arrangements are for all output configurations and output shaft types. **Important! When ordering, please specify mounting position for correct oil quantity.** In cases of mounting position other than shown here with regard to the oil quantity, please reference the Incline Mounting page, INTRO-24, and contact Application Engineering.

NOTE: The oil volumes shown are approximate values and cannot be used to correctly set the reducer oil level – **always** fill the reducer to the correct oil level plug and recheck in 1 week.

A2

Unit size	Reduction stage	Pints	Liters
38	1	1.2	0.6
	2	2.5	1.2
	3	2.3	1.1
48	1	2.2	1.1
	2	5.1	2.4
	3	5.1	2.4
58	2	7.2	3.4
	3	7.4	3.5
68	1	3.9	1.9
	2	8.7	4.1
	3	8.5	4.0
88	1	8.0	3.8
	2	18.6	8.8
	3	18.8	8.9
108	2	29.6	14.0
	3	30.0	14.2
128	2	44.2	20.9
	3	45.8	21.5
148	2	58.5	27.7
	3	59.6	28.2
168	2	88.1	41.7
	3	92.4	43.7

A2

Unit size	Reduction stage	Input reducer pints	Input reducer liters	Primary reducer pints	Primary reducer liters
38	4	1.2	0.6	2.2	1.1
	5	2.5	1.2	2.2	1.1
48	4	1.2	0.6	5.7	2.7
	5	2.5	1.2	5.7	2.7
68	4	1.2	0.6	9.8	4.6
	5	2.5	1.2	9.8	4.6
88	4	2.2	1.1	24.8	11.8
	5	5.1	2.4	24.8	11.8
108	4	2.2	1.1	31.2	14.8
	5	5.1	2.4	31.2	14.8
128	4	3.9	1.9	48.1	22.8
	5	5.1	2.4	48.1	22.8
148	4	3.9	1.9	65.3	30.1
	5	5.1	2.4	65.3	30.1
168	4	3.9	1.9	91.7	43.4
	5	8.7	4.0	91.7	43.4

Shaded A2 mounting is not a recommended mounting position for continuous duty applications due to the weight of oil on the high speed input seal. A2 is not recommended for input speeds above 1750 RPM. A2 mounting can be used for intermittent duty applications.

Note: ILH 38 units are sealed for life and furnished with only one plug for filling and draining.
Four- and five-stage reduction reducer consists of two reducers assembled to each other, the Input Reducer and the Primary Reducer. The reducers are sealed from each other and require different oil levels per the chart.
* Hole location on opposite side of reducer.

Oil level Ventilation Oil drain

A2 **Vertical wall mount – motor shaft up**

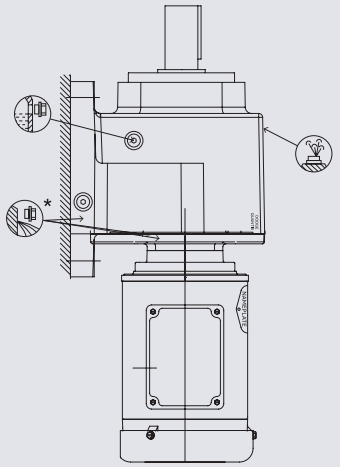

A2 **Vertical wall mount – motor shaft up**

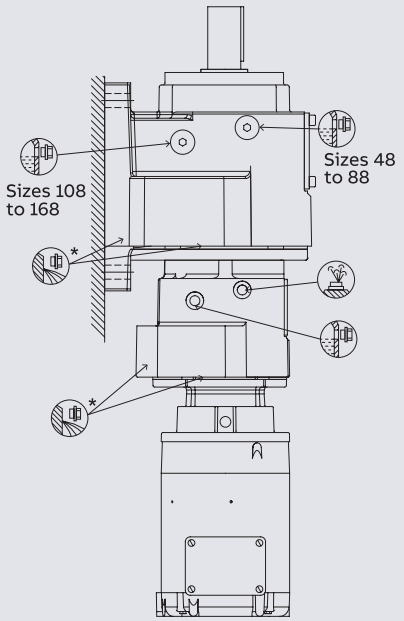

ILH mounting positions and oil quantities

C-face reducers and integral gearmotors

These mounting arrangements are for all output configurations and output shaft types. **Important! When ordering, please specify mounting position for correct oil quantity.** In cases of mounting position other than shown here with regard to the oil quantity, please reference the Incline Mounting page, INTRO-24, and contact Application Engineering.

NOTE: The oil volumes shown are approximate values and cannot be used to correctly set the reducer oil level – **always** fill the reducer to the correct oil level plug and recheck in 1 week.

A3

Unit size	Reduction stage	Pints	Liters
38	1	0.8	0.4
	2	1.3	0.6
	3	1.3	0.6
48	1	1.5	0.7
	2	3.2	1.5
	3	3.2	1.5
58	2	4.4	2.1
	3	4.6	2.2
68	1	3.1	1.5
	2	5.3	2.5
	3	5.5	2.6
88	1	5.3	2.5
	2	12.0	5.7
	3	12.5	5.9
108	2	18.2	8.6
	3	19.0	9.0
128	2	27.9	13.2
	3	29.8	14.1
148	2	50.5	23.9
	3	49.5	23.4
168	2	67.8	32.1
	3	71.4	33.8

Oil level Ventilation Oil drain

A3 **Horizontal – ceiling mount**

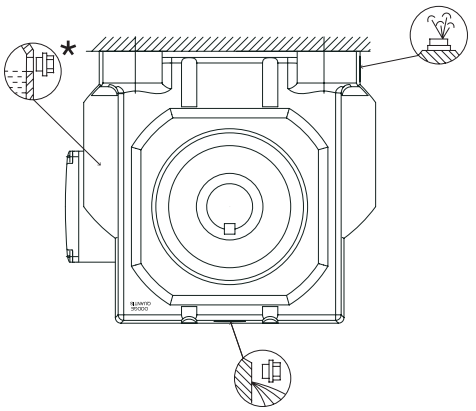

A3

Unit size	Reduction stage	Input reducer pints	Input reducer liters	Primary reducer pints	Primary reducer liters
38	4.0	0.8	0.4	1.8	0.9
	5.0	1.3	0.6	1.8	0.9
48	4.0	0.8	0.4	3.8	1.8
	5.0	1.3	0.6	3.8	1.8
68	4.0	0.8	0.4	7.2	3.4
	5.0	1.3	0.6	7.2	3.4
88	4.0	1.5	0.7	17.0	8.1
	5.0	3.2	1.5	17.0	8.1
108	4.0	1.5	0.7	29.8	14.1
	5.0	3.2	1.5	29.8	14.1
128	4.0	3.1	1.5	48.8	23.1
	5.0	3.2	1.5	48.8	23.1
148	4.0	3.1	1.5	62.0	29.3
	5.0	3.2	1.5	62.0	29.3
168	4.0	3.1	1.5	103.2	48.8
	5.0	5.3	2.5	103.2	48.8

A3 **Horizontal – ceiling mount**

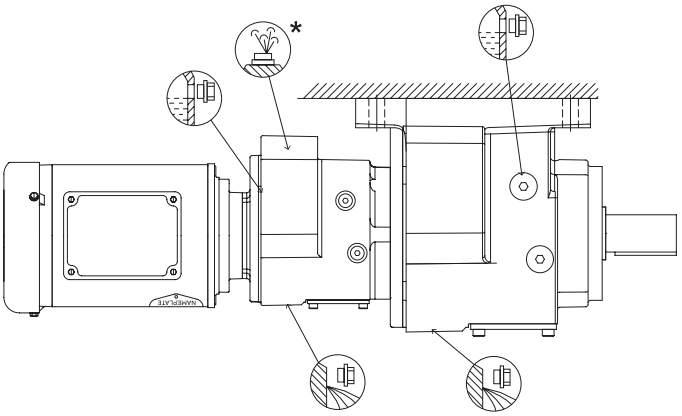

Note: ILH 38 units are sealed for life and furnished with only one plug for filling and draining.

Four- and five-stage reduction reducer consists of two reducers assembled to each other, the Input Reducer and the Primary Reducer. The reducers are sealed from each other and require different oil levels per the chart.

* Hole location on opposite side of reducer.

ILH mounting positions and oil quantities

C-face reducers and integral gearmotors

These mounting arrangements are for all output configurations and output shaft types. **Important! When ordering, please specify mounting position for correct oil quantity.** In cases of mounting position other than shown here with regard to the oil quantity, please reference the Incline Mounting page, INTRO-24, and contact Application Engineering.

NOTE: The oil volumes shown are approximate values and cannot be used to correctly set the reducer oil level – **always** fill the reducer to the correct oil level plug and recheck in 1 week.

A4

Unit size	Reduction stage	Pints	Liters
38	1	1.0	0.5
	2	1.5	0.7
	3	1.9	0.9
48	1	1.5	0.7
	2	3.8	1.8
	3	4.9	2.3
58	2	5.7	2.7
	3	7.2	3.4
68	1	3.7	1.8
	2	6.8	3.2
	3	8.5	4.0
88	1	4.9	2.3
	2	15.9	7.5
	3	19.7	9.3
108	2	27.9	13.2
	3	33.0	15.6
128	2	42.1	19.9
	3	51.6	24.4
148	2	54.3	25.7
	3	68.1	32.2
168	2	96.6	45.7
	3	115.0	54.4

Oil level Ventilation Oil drain

A4 **Vertical wall mount – motor shaft down**

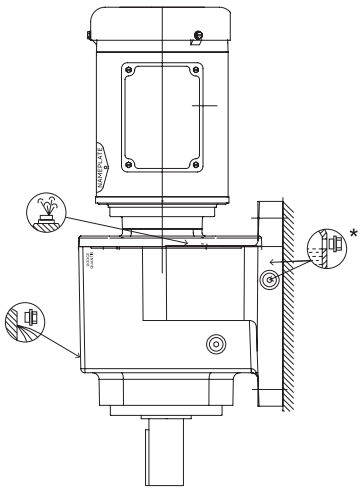

A4

Unit size	Reduction stage	Input reducer pints	Input reducer liters	Primary reducer pints	Primary reducer liters
38	4	1.0	0.5	2.2	1.0
	5	1.5	0.7	2.2	1.0
48	4	1.0	0.5	5.1	2.4
	5	1.5	0.7	5.1	2.4
68	4	1.0	0.5	9.0	4.3
	5	1.5	0.7	9.0	4.3
88	4	1.5	0.7	22.1	10.5
	5	3.8	1.8	22.1	10.5
108	4	1.5	0.7	35.7	16.9
	5	3.8	1.8	35.7	16.9
128	4	3.7	1.8	55.9	26.4
	5	3.8	1.8	55.9	26.4
148	4	3.7	1.8	72.9	34.5
	5	3.8	1.8	72.9	34.5
168	4	3.7	1.8	124.0	58.7
	5	6.8	3.2	124.0	58.7

** **Note:** A4 Mounting is not recommended for input speeds above 1750 RPM

A4 **Vertical wall mount – motor shaft down**

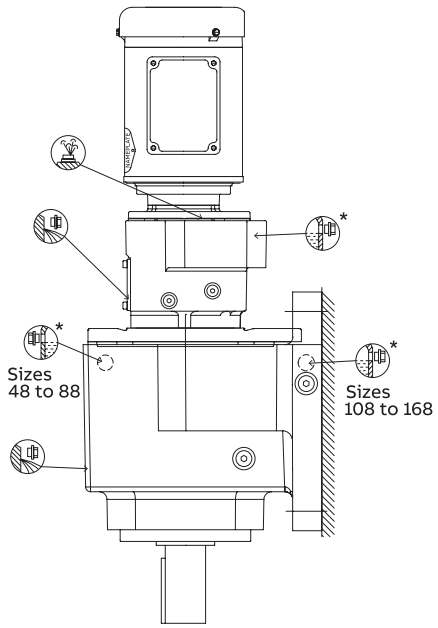

Note: ILH 38 units are sealed for life and furnished with only one plug for filling and draining.
Four- and five-stage reduction reducer consists of two reducers assembled to each other, the Input Reducer and the Primary Reducer. The reducers are sealed from each other and require different oil levels per the chart.
* Hole location on opposite side of reducer.

ILH mounting positions and oil quantities

C-face reducers and integral gearmotors

These mounting arrangements are for all output configurations and output shaft types. **Important! When ordering, please specify mounting position for correct oil quantity.** In cases of mounting position other than shown here with regard to the oil quantity, please reference the Incline Mounting page, INTRO-24, and contact Application Engineering.

NOTE: The oil volumes shown are approximate values and cannot be used to correctly set the reducer oil level – **always** fill the reducer to the correct oil level plug and recheck in 1 week.

A5

Unit size	Reduction stage	Pints	Liters
38	1	0.5	0.3
	2	1.3	0.6
	3	1.3	0.6
48	1	1.2	0.6
	2	3.4	1.6
	3	3.2	1.5
58	2	4.6	2.2
	3	4.6	2.2
68	1	2.1	1.0
	2	5.7	2.7
	3	5.5	2.6
88	1	3.3	1.6
	2	12.9	6.1
	3	12.5	5.9
108	2	22.2	10.5
	3	21.8	10.3
128	2	33.8	16.0
	3	33.4	15.8
148	2	44.0	20.8
	3	43.1	20.4
168	2	73.5	34.8
	3	72.1	34.1

Oil level Ventilation Oil drain

A5 **Horizontal – wall mount**

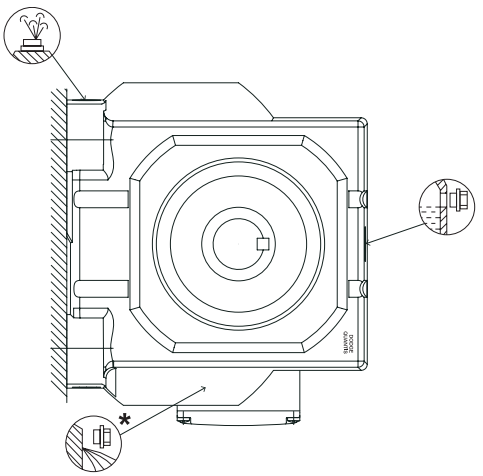

A5

Unit size	Reduction stage	Input reducer pints	Input reducer liters	Primary reducer pints	Primary reducer liters
38	4	0.5	0.3	1.9	0.9
	5	1.3	0.6	1.9	0.9
48	4	0.5	0.3	4.5	2.1
	5	1.3	0.6	4.5	2.1
68	4	0.5	0.3	7.8	3.7
	5	1.3	0.6	7.8	3.7
88	4	1.2	0.6	18.6	8.8
	5	3.4	1.6	18.6	8.8
108	4	1.2	0.6	31.7	15.0
	5	3.4	1.6	31.7	15.0
128	4	2.1	1.0	46.6	22.0
	5	3.4	1.6	46.6	22.0
148	4	2.1	1.0	61.3	29.0
	5	3.4	1.6	61.3	29.0
168	4	2.1	1.0	97.2	46.0
	5	5.7	2.7	97.2	46.0

A5 **Horizontal – wall mount**

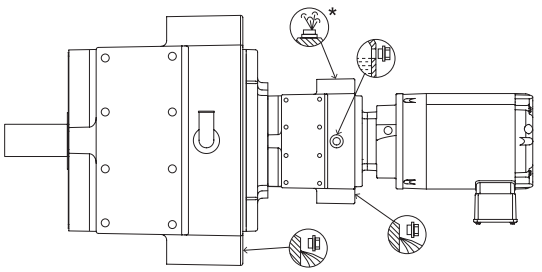

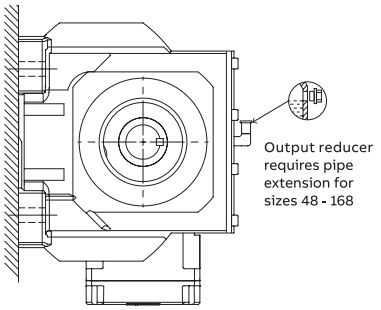

Note: ILH 38 units wosite side of reducer.

ILH mounting positions and oil quantities

C-face reducers and integral gearmotors

These mounting arrangements are for all output configurations and output shaft types. **Important! When ordering, please specify mounting position for correct oil quantity.** In cases of mounting position other than shown here with regard to the oil quantity, please reference the Incline Mounting page, INTRO-24, and contact Application Engineering.

NOTE: The oil volumes shown are approximate values and cannot be used to correctly set the reducer oil level – **always** fill the reducer to the correct oil level plug and recheck in 1 week.

A6

Unit size	Reduction stage	Pints	Liters
38	1	0.5	0.3
	2	1.3	0.6
	3	1.9	0.9
48	1	1.0	0.5
	2	2.7	1.3
	3	3.0	1.4
58	2	4.0	1.9
	3	4.2	2.0
68	1	2.2	1.1
	2	4.9	2.3
	3	5.1	2.4
88	1	3.4	1.6
	2	11.2	5.3
	3	11.4	5.4
108	2	19.7	9.3
	3	20.1	9.5
128	2	29.8	14.1
	3	31.3	14.8
148	2	38.7	18.3
	3	40.4	19.1
168	2	63.6	30.1
	3	65.9	31.2

Oil level Ventilation Oil drain

A6 **Horizontal – wall mount**

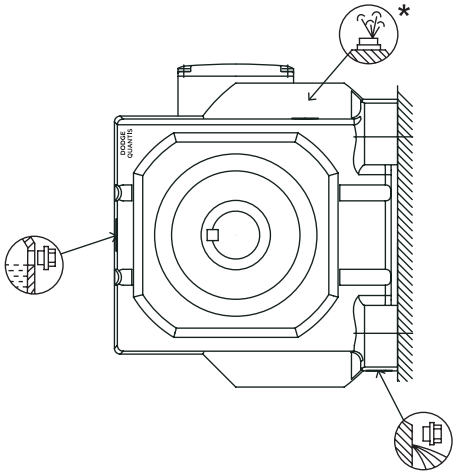

A6

Unit size	Reduction stage	Input reducer pints	Input reducer liters	Primary reducer pints	Primary reducer liters
38	4	0.5	0.3	1.6	0.8
	5	1.3	0.6	1.6	0.8
48	4	0.5	0.3	3.3	1.6
	5	1.3	0.6	3.3	1.6
68	4	0.5	0.3	6.5	3.1
	5	1.3	0.6	6.5	3.1
88	4	1.0	0.5	15.6	7.4
	5	2.7	1.3	15.6	7.4
108	4	1.0	0.5	26.4	12.5
	5	2.7	1.3	26.4	12.5
128	4	2.2	1.1	39.4	18.6
	5	2.7	1.3	39.4	18.6
148	4	2.2	1.1	49.8	23.6
	5	2.7	1.3	49.8	23.6
168	4	2.2	1.1	78.2	37.0
	5	4.9	2.3	78.2	37.0

A6 **Horizontal – wall mount**

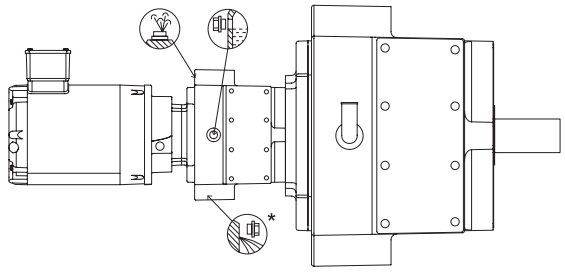

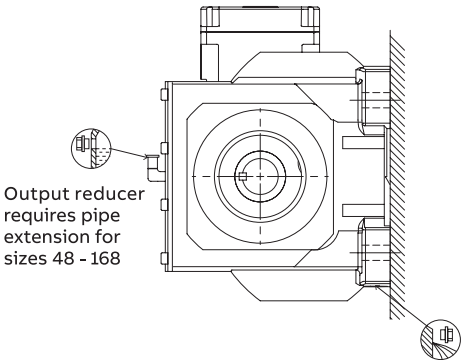

Note: ILH 38 units are sealed for life and furnished with only one plug for filling and draining.
Four- and five-stage reduction reducer consists of two reducers assembled to each other, the Input Reducer and the Primary Reducer. The reducers are sealed from each other and require different oil levels per the chart.
* Hole location on opposite side of reducer.

Overhung Loads

ILH – standard bearings

Permissible overhung loads (OHL) at service factor SF =1.0

1. Calculation based on bearing life

$$F_x \text{ perm.}_1 = F_R \text{ perm} \quad \frac{y}{z + X} \quad [lb_f]$$

2. Calculation based on mechanical strength

$$F_x \text{ perm.}_2 = \frac{a}{b + X} \quad [lb_f]$$

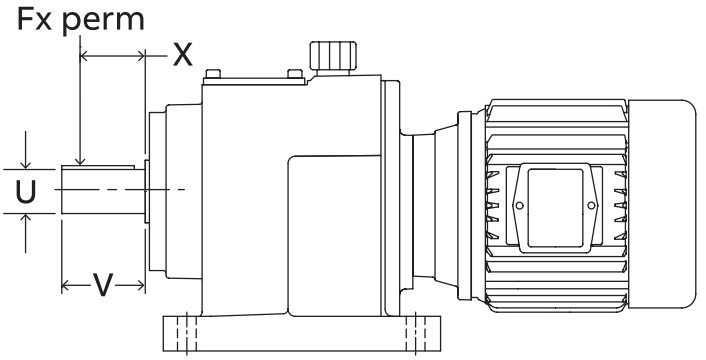

The data in the table below lists the permissible output shaft overhung load (OHL) when the load is located at mid shaft. To calculate the permissible OHL when the load is located at other positions, use the formulas above along with the data below.

Both equations 1 and 2 must be used to determine if the bearing or shaft strength limits the OHL. Limit the OHL to the lower of the 2 calculations.

Type stages	y in (mm)	z in (mm)	a lbf-in (kNmm)	b in (mm)	u in (mm)	v in (mm)	*	FR perm. (lbf) for x = v/2 for output speeds n2 in RPM							
								n2 ≤ 16	n2 ≤ 25	n2 ≤ 40	n2 ≤ 63	n2 ≤ 100	n 2≤ 160	n2 ≤ 250	≤ 400
H_38 (2-5)	**4.173**	**3.189**	**1496**	**0**	**1.000**	**1.97**	ccw	1695	1432	1234	881	546	416	279	250
	(106)	(81)	(169)	(0)	(25)	(50)	cw	1625	1360	1167	937	710	569	407	385
	4.370	3.189	1859	0.63	1.250	2.36	ccw	1619	1358	1117	762	472	360	241	230
	(111)	(81)	(210)	(16)	(30)	(60)	cw	1551	1299	1115	895	614	492	351	351
H_48 (2-5)	**5.315**	**4.134**	**2346**	**0**	**1.250**	**2.36**	ccw	2810	2354	1992	1517	1142	937	919	617
	(135)	(105)	(265)	(0)	(30)	(60)	cw	2700	2246	1884	1533	1270	1095	967	779
	5.709	4.134	4417	0.748	1.625	3.15	ccw	2617	2192	1801	1293	973	798	785	529
	(145)	(105)	(499)	(19)	(40)	(80)	cw	2513	2091	1753	1427	1182	989	899	664
H_58 (2-3)	6.102	4.724	3036	0	1.375	2.76	ccw	3520	2800	2430	2100	**1600**	**1200**	**750**	**875**
	155	120	343	(0)	(35)	(70)	cw	2880	2400	2250	2100	1700	1450	1150	1025
H_68 (2-5)	**6.693**	**5.098**	**4992**	**0**	**1.625**	**3.15**	ccw	3844	3091	2765	1940	1306	962	1057	763
	(170)	(129.50)	(564)	(0)	(40)	(80)	cw	4186	3437	3174	2347	1715	1344	1308	986
	7.087	5.098	8346	0.906	2.125	3.94	ccw	3516	2828	2529	1774	1194	879	967	677
	(180)	(129.50)	(943)	(23)	(50)	(100)	cw	3828	3143	2902	2147	1569	1230	1196	873
H_88 (2-5)	**8.228**	**6.26**	**9559**	**0**	**2.125**	**3.94**	ccw	7915	6643	5712	4773	3437	2954	2252	2700
	(209)	(159)	(1080)	(0)	(50)	(100)	cw	7609	6337	5346	4471	3599	3087	2605	2507
	8.622	6.26	13569	0.827	2.375	4.72	ccw	7553	6339	5451	4554	3325	2855	2178	2543
	(219)	(159)	(1533)	(21)	(60)	(120)	cw	7261	6047	5101	4267	3435	2945	2486	2392
H_108 (2-5)	**9.082**	**7.441**	**17348**	**0**	**2.375**	**4.72**	ccw	11965	10447	9104	7958	6899	5669	4745	3965
	(249)	(189)	(1960)	(0)	(60)	(120)	cw	9128	7619	6262	5138	4288	4037	3705	3312
	10.196	7.441	17968	1.142	2.875	5.51	ccw	11483	10060	8743	7429	6639	5456	4566	3814
	(259)	(189)	(2030)	(29)	(70)	(140)	cw	8779	7326	6023	4940	4126	3882	3557	3185
H_128 (2-5)	**12.027**	**9.271**	**24783**	**0**	**2.875**	**5.51**	ccw	16149	14131	12301	10779	9224	7590	6350	5311
	(305.50)	(235.50)	(2800)	(0)	(70)	(140)	cw	11784	9782	7975	6465	5579	5306	4886	4392
	12.617	9.271	40715	1.181	3.625	6.69	ccw	15397	13460	11736	10287	8791	7237	6061	5056
	(320.50)	(235.50)	(4600)	(30)	(90)	(170)	cw	11235	9322	7598	6159	5321	5054	4658	4186
H_148 (2-5)	**13.424**	**10.078**	**58948**	**0**	**3.625**	**6.69**	ccw	18922	16576	14429	12622	10467	8707	7332	6165
	(341)	(256)	(6660)	(0)	(90)	(170)	cw	14204	11828	9680	7912	7373	6752	6088	5382
	14.212	10.078	53991	1.29	4.000	8.27	ccw	17761	15664	13623	11928	9898	8208	6921	5825
	(361)	(256)	(6100)	(33)	(100)	(210)	cw	13417	11166	9149	7468	6967	6384	5751	5083
H_168 (2-5)	**16.554**	**12.401**	**73463**	**0**	**4.000**	**8.27**	ccw	54838	47232	40320	34650	31412	28075	25073	22079
	(420.50)	(315.50)	(8300)	(0)	(100)	(210)	cw	47825	40318	33399	27888	27156	25410	23337	21001
	16.554	12.401	88510	1.299	4.750	8.27	ccw	54838	47232	40320	34650	31412	28075	25073	22079
	(420.50)	(315.50)	(10000)	(30)	(120)	(210)	cw	47825	40318	33399	27888	27156	25410	23337	21001

* Direction of rotation with view on output shaft

To convert lbf to Newtons (N), multiply by 4.448

bold - Standard shaft

cw = clockwise / ccw = counter clockwise

ILH – heavy duty bearing

Permissible overhung loads (OHL) at service factor SF =1.0

1. **Calculation based on bearing life**

$$F_x \text{ perm.}_1 = F_R \text{ perm} \quad \frac{y}{z + X} \quad [lb_f]$$

2. **Calculation based on mechanical strength**

$$F_x \text{ perm.}_2 = \frac{a}{b + X} \quad [lb_f]$$

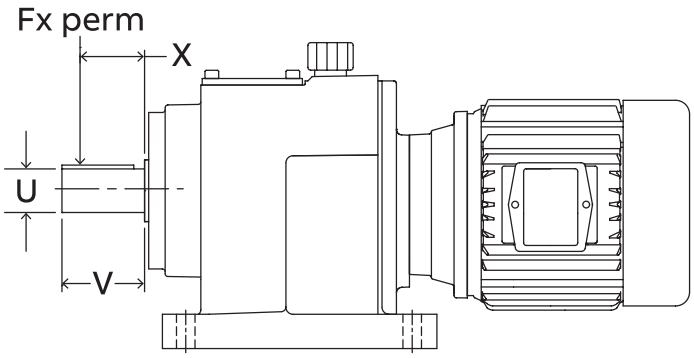

The data in the table below lists the permissible output shaft overhung load (OHL) when the load is located at mid shaft. To calculate the permissible OHL when the load is located at other positions, use the formulas above along with the data below.

Both equations 1 and 2 must be used to determine if the bearing or shaft strength limits the OHL. Limit the OHL to the lower of the 2 calculations.

Type stages	y in (mm)	z in (mm)	a lbf-in (kNmm)	b in (mm)	u in (mm)	v in (mm)	*	FR perm. (lbf) for x = v/2 for output speeds n2 in RPM							
								≤ 16	≤ 25	≤ 40	≤ 63	≤ 100	≤ 160	≤ 250	≤ 400
H_38 (2-5)	**4.173**	**3.189**	**1100**	**0**	**1.000**	**1.97**	ccw	Not available							
	(106)	(81)	(124.3)	(0)	(25)	(50)	cw								
	4.370	3.189	1859	0.630	1.250	2.36	ccw								
	(111)	(81)	(210)	(16)	(30)	(60)	cw								
H_48 (2-5)	5.315	4.134	2346	**0**	**1.250**	**2.36**	ccw								
	(135)	(105)	(265)	(0)	(30)	(60)	cw								
	5.709	4.134	4417	0.748	1.625	3.15	ccw								
	(145)	(105)	(499)	(19)	(40)	(80)	cw								
H_68 (2-5)	**6.693**	**5.098**	**4992**	**0**	**1.625**	**3.15**	ccw	5528	5358	5183	5019	4857	4723	4618	4480
	(170)	(129.50)	(564)	(0)	(40)	(80)	cw	5528	5358	5184	5021	4861	4682	4457	4108
	7.087	5.098	7019	0.906	2.125	3.94	ccw	6127	5934	5738	5557	5372	5201	4779	4231
	(180)	(129.50)	(793)	(23)	(50)	(100)	cw	6110	5919	5724	5543	5015	4422	4208	3877
H_88 (2-5)	**8.228**	**6.260**	**9559**	**0**	**2.125**	**3.94**	ccw	8111	7859	7273	5659	4226	4886	5089	4752
	(209)	(159)	(1080)	(0)	(50)	(100)	cw	8111	7859	7606	7364	7311	6944	6819	6141
	8.622	6.260	13569	0.827	2.375	4.72	ccw	9114	8249	6520	5077	3792	4381	4559	4263
	(219)	(159)	(1533)	(21)	(60)	(120)	cw	9109	8819	8519	8240	7732	7231	6664	5858
H_108 (2-5)	**9.082**	**7.441**	**17348**	**0**	**2.375**	**4.72**	ccw	14334	12682	10000	7733	5745	6304	6773	6725
	(249)	(189)	(1960)	(0)	(60)	(120)	cw	14334	14178	13991	12144	10104	9385	8971	8004
	10.196	7.441	17968	1.142	2.875	5.51	ccw	14262	11586	9135	7080	5257	5763	6199	6150
	(259)	(189)	(2030)	(29)	(70)	(140)	cw	14751	14596	13891	11676	9718	9025	8451	7700
H_128 (2-5)	**12.027**	**9.271**	**24783**	**0**	**2.875**	**5.51**	ccw	17484	17302	17085	16838	16399	16317	14897	13269
	(305.50)	(235.50)	(2800)	(0)	(70)	(140)	cw	17484	17302	17085	16838	13671	13681	13120	12151
	12.617	9.271	40715	1.181	3.625	6.69	ccw	28475	27748	23636	15857	12379	15681	14195	12647
	(320.50)	(235.50)	(4600)	(30)	(90)	(170)	cw	27977	23544	19482	17958	14884	13031	12498	11595
H_148 (2-5)	**13.424**	**10.078**	**42564**	**0**	**3.625**	**6.69**	ccw	34383	34052	30826	26392	23276	20962	18802	16627
	(341)	(256)	(4809)	(0)	(90)	(170)	cw	34383	31301	26056	21664	19518	18604	17281	15673
	14.212	10.078	53991	1.29	4.000	8.27	ccw	31492	31171	29113	24933	21987	19800	17764	15703
	(361)	(256)	(6100)	(33)	(100)	(210)	cw	31461	29562	24610	20436	18441	17581	16329	14799
H_168 (2-5)	**16.554**	**12.401**	**73463**	**0**	**4.000**	**8.27**	ccw	Not available							
	(420.50)	(315.50)	(8300)	(0)	(100)	(210)	cw								
	16.554	12.401	88510	1.299	4.750	8.27	ccw								
	(420.50)	(315.50)	(10000)	(30)	(120)	(210)	cw								

* Direction of rotation with view on output shaft
To convert lbf to Newtons (N), multiply by 4.448

bold - Standard shaft
cw = clockwise / ccw = counter clockwise

ILH Selection - 60 Hz

ILH 38

Size: H_381

Single reduction – Clamp collar, three-piece coupled, separate

NEMA motor frame IEC motor frame Separate group		56C 71D 71			— 80D 80			140TC 90D 90			180TC 100D 100		
Ratio	Output Rating data	3450	1750	1160	3450	1750	1160	3450	1750	1160	3450	1750	1160
	Output RPM	2170	**1100**	730	2170	**1100**	730	2170	**1100**	730	2170	**1100**	730
	Input Hp (max) **(C)**	3.98	**2.02**	1.34	4.85	**2.46**	1.63	9.54	**4.84**	3.21	17.49	**8.87**	5.88
1.59	Output torque, in-lb	116	**116**	116	141	**141**	141	277	**277**	277	508	**508**	508
	OHL input shaft	55	**55**	55	55	**55**	55	140	**140**	140	190	**190**	190
	OHL output shaft **(B)**	–	**–**	–	–	**–**	–	–	**–**	–	–	**–**	–
	Output RPM	1865	**946**	627	1865	**946**	627	1865	**946**	627	1865	**946**	627
	Input Hp (max) **(C)**	3.98	**2.02**	1.34	4.85	**2.46**	1.63	9.07	**4.60**	3.05	16.50	**8.37**	5.55
1.85	Output torque, in-lb	135	**135**	135	164	**164**	164	306	**306**	306	558	**558**	558
	OHL input shaft	55	**55**	55	55	**55**	55	140	**140**	140	190	**190**	190
	OHL output shaft **(B)**	–	**–**	–	–	**–**	–	–	**–**	–	–	**–**	–
	Output RPM	1683	**853**	566	1683	**853**	566	1683	**853**	566	1683	**853**	566
	Input Hp (max) **(C)**	3.98	**2.02**	1.34	4.85	**2.46**	1.63	8.71	**4.42**	2.93	15.79	**8.01**	5.31
2.05	Output torque, in-lb	149	**149**	149	182	**182**	182	326	**326**	326	591	**591**	591
	OHL input shaft	55	**55**	55	55	**55**	55	140	**140**	140	190	**190**	190
	OHL output shaft **(B)**	–	**–**	–	–	**–**	–	–	**–**	–	–	**–**	–
	Output RPM	1540	**783**	518	1540	**783**	518	1540	**783**	518	1540	**783**	518
	Input Hp (max) **(C)**	3.98	**2.02**	1.34	4.85	**2.46**	1.63	8.42	**4.27**	2.83	15.24	**7.73**	5.12
2.24	Output torque, in-lb	163	**163**	163	198	**198**	198	344	**344**	344	624	**624**	624
	OHL input shaft	55	**55**	55	55	**55**	55	140	**140**	140	190	**190**	190
	OHL output shaft **(B)**	50	**50**	50	50	**50**	50	50	**50**	50	50	**50**	50
	Output RPM	1380	**700**	464	1380	**700**	464	1380	**700**	464	1380	**700**	464
	Input Hp (max) **(C)**	3.98	**2.02**	1.34	4.85	**2.46**	1.63	8.00	**4.06**	2.69	14.15	**7.18**	4.76
2.50	Output torque, in-lb	182	**182**	182	221	**221**	221	366	**366**	366	646	**646**	646
	OHL input shaft	55	**55**	55	55	**55**	55	140	**140**	140	190	**190**	190
	OHL output shaft **(B)**	102	**102**	102	102	**102**	102	102	**102**	102	102	**102**	102
	Output RPM	1264	**640**	425	1264	**640**	425	1264	**640**	425	1264	**640**	425
	Input Hp (max) **(C)**	3.92	**1.99**	1.32	4.85	**2.46**	1.63	7.69	**3.90**	2.59	13.92	**7.06**	4.68
2.73	Output torque, in-lb	196	**196**	196	242	**242**	242	383	**383**	383	694	**694**	694
	OHL input shaft	55	**55**	55	55	**55**	55	140	**140**	140	190	**190**	190
	OHL output shaft **(B)**	102	**102**	102	102	**102**	102	102	**102**	102	102	**102**	102
	Output RPM	1150	**583**	387	1150	**583**	387	1150	**583**	387	1150	**583**	387
	Input Hp (max) **(C)**	3.77	**1.91**	1.27	4.85	**2.46**	1.63	7.35	**3.73**	2.47	12.91	**6.55**	4.34
3.00	Output torque, in-lb	206	**206**	206	266	**266**	266	403	**403**	403	708	**708**	708
	OHL input shaft	55	**55**	55	55	**55**	55	140	**140**	140	190	**190**	190
	OHL output shaft **(B)**	211	**211**	211	211	**211**	211	211	**211**	211	211	**211**	211
	Output RPM	1042	**529**	350	1042	**529**	350	1042	**529**	350	1042	**529**	350
	Input Hp (max) **(C)**	3.59	**1.82**	1.21	4.85	**2.46**	1.63	7.00	**3.55**	2.35	9.52	**4.83**	3.20
3.31	Output torque, in-lb	217	**217**	217	293	**293**	293	423	**423**	423	576	**576**	576
	OHL input shaft	55	**55**	55	55	**55**	55	140	**140**	140	190	**190**	190
	OHL output shaft **(B)**	269	**269**	269	269	**269**	269	269	**269**	269	269	**269**	269
	Output RPM	940	**477**	316	940	**477**	316	940	**477**	316	940	**477**	316
	Input Hp (max) **(C)**	3.41	**1.73**	1.15	4.61	**2.34**	1.55	6.64	**3.37**	2.23	9.55	**4.69**	3.11
3.67	Output torque, in-lb	229	**229**	229	309	**309**	309	445	**445**	445	620	**620**	620
	OHL input shaft	55	**55**	55	55	**55**	55	140	**140**	140	190	**190**	190
	OHL output shaft **(B)**	258	**258**	258	258	**258**	258	258	**258**	258	258	**258**	258
	Output RPM	831	**421**	280	831	**421**	280	831	**421**	280	831	**421**	280
	Input Hp (max) **(C)**	3.17	**1.61**	1.07	4.30	**2.18**	1.45	6.23	**3.16**	2.09	7.24	**3.67**	2.43
4.15	Output torque, in-lb	241	**241**	241	326	**326**	326	472	**472**	472	549	**549**	549
	OHL input shaft	55	**55**	55	55	**55**	55	140	**140**	140	190	**190**	190
	OHL output shaft **(B)**	371	**371**	371	371	**371**	371	371	**371**	371	371	**371**	371

Service factor: 1.0

(A) (B) (C) - See footnotes page on inside back cover

Blank areas (-) indicate configuration not available

ILH 38

Size: H_381

Single reduction – Clamp collar, three-piece coupled, separate

NEMA motor frame		56C			—			140TC			180TC		
IEC motor frame		71D			80D			90D			100D		
Separate group		71			80			90			100		
Ratio	**Output Rating data**	**3450**	**1750**	**1160**	**3450**	**1750**	**1160**	**3450**	**1750**	**1160**	**3450**	**1750**	**1160**
	Output RPM	753	**382**	253	753	**382**	253	753	**382**	253	753	**382**	253
	Input Hp (max) **(C)**	3.02	**1.52**	1.01	4.06	**2.06**	1.37	5.93	**3.01**	2.00	8.24	**4.18**	2.77
4.58	Output torque, in-lb	252	**252**	252	340	**340**	340	496	**496**	496	689	**689**	689
	OHL input shaft	55	**55**	55	55	**55**	55	140	**140**	140	190	**190**	190
	OHL output shaft **(B)**	371	**371**	371	371	**371**	371	371	**371**	371	371	**371**	371
	Output RPM	666	**338**	224	666	**338**	224	666	**338**	224	666	**338**	224
	Input Hp (max) **(C)**	2.78	**1.41**	.93	3.79	**1.92**	1.27	5.54	**2.81**	1.86	6.55	**3.32**	2.20
5.18	Output torque, in-lb	263	**263**	263	358	**358**	358	524	**524**	524	619	**619**	619
	OHL input shaft	55	**55**	55	55	**55**	55	140	**140**	140	190	**190**	190
	OHL output shaft **(B)**	543	**543**	543	543	**543**	543	543	**543**	543	543	**543**	543
	Output RPM	583	**296**	196	583	**296**	196	583	**296**	196	–	**–**	–
	Input Hp (max) **(C)**	2.78	**1.26**	.93	3.79	**1.77**	1.27	5.54	**2.20**	1.86	–	**–**	–
5.92	Output torque, in-lb	269	**269**	269	377	**377**	377	469	**469**	469	–	**–**	–
	OHL input shaft	55	**55**	55	55	**55**	55	140	**140**	140	–	**–**	–
	OHL output shaft **(B)**	543	**543**	543	543	**543**	543	543	**543**	543	–	**–**	–
	Output RPM	513	**260**	172	513	**260**	172	513	**260**	172	–	**–**	–
	Input Hp (max) **(C)**	2.23	**1.13**	.75	3.19	**1.62**	1.07	3.45	**1.75**	1.16	–	**–**	–
6.73	Output torque, in-lb	274	**274**	274	393	**393**	393	424	**424**	424	–	**–**	–
	OHL input shaft	55	**55**	55	55	**55**	55	140	**140**	140	–	**–**	–
	OHL output shaft **(B)**	583	**583**	583	583	**583**	583	583	**583**	583	–	**–**	–
	Output RPM	479	**243**	161	479	**243**	161	479	**243**	161	–	**–**	–
	Input Hp (max) **(C)**	2.11	**1.07**	.71	2.56	**1.30**	.86	2.56	**1.30**	.86	–	**–**	–
7.20	Output torque, in-lb	277	**277**	277	337	**337**	337	337	**337**	337	–	**–**	–
	OHL input shaft	55	**55**	55	55	**55**	55	140	**140**	140	–	**–**	–
	OHL output shaft **(B)**	583	**583**	583	583	**583**	583	583	**583**	583	–	**–**	–
	Output RPM	416	**211**	140	416	**211**	140	–	**–**	–	–	**–**	–
	Input Hp (max) **(C)**	1.87	**0.95**	.63	1.87	**0.95**	.63	–	**–**	–	–	**–**	–
8.30	Output torque, in-lb	284	**284**	284	284	**284**	284	–	**–**	–	–	**–**	–
	OHL input shaft	55	**55**	55	55	**55**	55	–	**–**	–	–	**–**	–
	OHL output shaft **(B)**	834	**834**	834	834	**834**	834	–	**–**	–	–	**–**	–
	Output RPM	370	**188**	124	–	**–**	–	–	**–**	–	–	**–**	–
	Input Hp (max) **(C)**	1.66	**0.84**	.56	–	**–**	–	–	**–**	–	–	**–**	–
9.33	Output torque, in-lb	282	**282**	282	–	**–**	–	–	**–**	–	–	**–**	–
	OHL input shaft	55	**55**	55	–	**–**	–	–	**–**	–	–	**–**	–
	OHL output shaft **(B)**	834	**834**	834	–	**–**	–	–	**–**	–	–	**–**	–

Service factor: 1.0

(A) (B) (C) - See footnotes page on inside back cover

Blank areas (-) indicate configuration not available

ILH 38

Size: H_382

Double reduction – Clamp collar, three-piece coupled, separate

NEMA motor frame		56C			—			140TC			180TC		
ICE motor frame		71D			80D			90D			100D		
Separate group		71			80			90			100		
Ratio	Output Rating data	3450	1750	1160	3450	1750	1160	3450	1750	1160	3450	1750	1160
	Output RPM	-	-	-	101	51	34	101	51	34	101	51	34
	Input HP	-	-	-	4.85	2.46	1.63	8.10	4.29	2.90	8.10	4.29	2.90
34.27	Output Torque, In-Lb	-	-	-	3036	3036	3035	5071	5298	5400	5071	5298	5400
	OHL Input Shaft	-	-	-	(A)	345	360	(A)	455	470	(A)	710	735
	OHL Output Shaft	-	-	-	1550	2200	2200	1550	2200	2200	1550	2200	2200
	Output RPM	80	41	27	80	41	27	80	41	27	80	41	27
	Input HP	3.98	2.02	1.34	4.85	2.46	1.63	6.60	3.47	2.31	6.60	3.47	2.31
42.99	Output Torque, In-Lb	3126	3128	3130	3809	3809	3808	5184	5374	5400	5184	5374	5400
	OHL Input Shaft	(A)	215	225	(A)	345	360	(A)	455	470	(A)	710	735
	OHL Output Shaft	1800	2200	2200	1800	2200	2200	1800	2200	2200	1800	2200	2200
	Output RPM	72	37	24	72	37	24	72	37	24	72	37	24
	Input HP	3.98	2.02	1.34	4.85	2.46	1.63	5.90	3.14	2.08	5.90	3.14	2.08
47.77	Output Torque, In-Lb	3473	3475	3478	4232	4232	4231	5149	5400	5400	5149	5400	5400
	OHL Input Shaft	(A)	215	225	(A)	345	360	(A)	455	470	(A)	710	735
	OHL Output Shaft	1950	2200	2200	1950	2200	2200	1950	2200	2200	1950	2200	2200
	Output RPM	63	32	21	63	32	21	63	32	21	63	32	21
	Input HP	3.98	2.02	1.34	4.85	2.46	1.63	5.20	2.73	1.81	5.20	2.73	1.81
54.94	Output Torque, In-Lb	3994	3997	4000	4867	4867	4865	5219	5400	5400	5219	5400	5400
	OHL Input Shaft	(A)	215	225	(A)	345	360	(A)	455	470	(A)	710	735
	OHL Output Shaft	2100	2200	2200	2100	2200	2200	2100	2200	2200	2100	2200	2200
	Output RPM	58	30	20	58	30	20	58	30	20	58	30	20
	Input HP	3.98	2.02	1.34	4.85	2.46	1.63	4.90	2.54	1.68	4.90	2.54	1.68
59.09	Output Torque, In-Lb	4296	4298	4302	5235	5235	5233	5289	5400	5400	5289	5400	5400
	OHL Input Shaft	(A)	215	225	(A)	345	360	(A)	455	470	(A)	710	735
	OHL Output Shaft	2200	2200	2200	2200	2200	2200	2200	2200	2200	2200	2200	2200
	Output RPM	50	25	17	50	25	17	50	25	17	50	25	17
	Input HP	3.98	2.02	1.34	4.20	2.18	1.44	4.20	2.18	1.44	4.20	2.18	1.44
68.85	Output Torque, In-Lb	5006	5008	5012	5282	5400	5400	5282	5400	5400	5282	5400	5400
	OHL Input Shaft	(A)	215	225	(A)	345	360	(A)	455	470	(A)	710	735
	OHL Output Shaft	2200	2200	2200	2200	2200	2200	2200	2200	2200	2200	2200	2200
	Output RPM	46	23	16	46	23	16	46	23	16	46	23	16
	Input HP	3.90	2.01	1.33	3.90	2.01	1.33	3.90	2.01	1.33	3.90	2.01	1.33
74.64	Output Torque, In-Lb	5318	5400	5400	5318	5400	5400	5318	5400	5400	5318	5400	5400
	OHL Input Shaft	(A)	215	225	(A)	345	360	(A)	455	470	(A)	710	735
	OHL Output Shaft	2200	2200	2200	2200	2200	2200	2200	2200	2200	2200	2200	2200
	Output RPM	42	22	14	42	22	14	42	22	14	42	22	14
	Input HP	3.60	1.85	1.22	3.60	1.85	1.22	3.60	1.85	1.22	3.60	1.85	1.22
81.21	Output Torque, In-Lb	5341	5400	5400	5341	5400	5400	5341	5400	5400	5341	5400	5400
	OHL Input Shaft	(A)	215	225	(A)	345	360	(A)	455	470	(A)	710	735
	OHL Output Shaft	2200	2200	2200	2200	2200	2200	2200	2200	2200	2200	2200	2200
	Output RPM	39	20	13	39	20	13	39	20	13	39	20	13
	Input HP	3.30	1.69	1.12	3.30	1.69	1.12	3.30	1.69	1.12	3.30	1.69	1.12
88.72	Output Torque, In-Lb	5348	5400	5400	5348	5400	5400	5348	5400	5400	5348	5400	5400
	OHL Input Shaft	(A)	215	225	(A)	345	360	(A)	455	470	(A)	710	735
	OHL Output Shaft	2200	2200	2200	2200	2200	2200	2200	2200	2200	2200	2200	2200
	Output RPM	35	18	12	35	18	12	35	18	12	35	18	12
	Input HP	3.00	1.54	1.02	3.00	1.54	1.02	3.00	1.54	1.02	3.00	1.54	1.02
97.38	Output Torque, In-Lb	5337	5400	5400	5337	5400	5400	5337	5400	5400	5337	5400	5400
	OHL Input Shaft	(A)	215	225	(A)	345	360	(A)	455	470	(A)	710	735
	OHL Output Shaft	2200	2200	2200	2200	2200	2200	2200	2200	2200	2200	2200	2200
	Output RPM	32	16	11	32	16	11	32	16	11	32	16	11
	Input HP	2.75	1.39	0.92	2.75	1.39	0.92	2.75	1.39	0.92	2.75	1.39	0.92
107.49	Output Torque, In-Lb	5400	5400	5400	5400	5400	5400	5400	5400	5400	5400	5400	5400
	OHL Input Shaft	(A)	215	225	(A)	345	360	(A)	455	470	(A)	710	735
	OHL Output Shaft	2200	2200	2200	2200	2200	2200	2200	2200	2200	2200	2200	2200

Service factor: 1.0

(A) (B) (C) - See footnotes page on inside back cover

Blank areas (-) indicate configuration not available

ILH 38

Size: H_382

Double reduction – Clamp collar, three-piece coupled, separate

NEMA motor frame		56C			—			140TC			180TC		
ICE motor frame		71D			80D			90D			100D		
Separate group		71			80			90			100		
Ratio	Output Rating data	3450	1750	1160	3450	1750	1160	3450	1750	1160	3450	1750	1160
	Output RPM	28	**14**	10	28	**14**	10	28	**14**	10	28	**14**	10
	Input HP	2.44	**1.24**	0.82	2.44	**1.24**	0.82	2.44	**1.24**	0.82	2.44	**1.24**	0.82
121.27	Output Torque, In-Lb	5400	**5400**	5400	5400	**5400**	5400	5400	**5400**	5400	5400	**5400**	5400
	OHL Input Shaft	**(A)**	**215**	225	**(A)**	**345**	360	**(A)**	**455**	470	**(A)**	**710**	735
	OHL Output Shaft	2200	**2200**	2200	2200	**2200**	2200	2200	**2200**	2200	2200	**2200**	2200
	Output RPM	26	**13**	9	26	**13**	9	26	**13**	9	26	**13**	9
	Input HP	2.22	**1.12**	0.75	2.22	**1.12**	0.75	2.22	**1.12**	0.75	2.22	**1.12**	0.75
133.36	Output Torque, In-Lb	5400	**5400**	5400	5400	**5400**	5400	5400	**5400**	5400	5400	**5400**	5400
	OHL Input Shaft	**(A)**	**215**	225	**(A)**	**345**	360	**(A)**	**455**	470	**(A)**	**710**	735
	OHL Output Shaft	2200	**2200**	2200	2200	**2200**	2200	2200	**2200**	2200	2200	**2200**	2200
	Output RPM	23	**12**	8	23	**12**	8	23	**12**	8	23	**12**	8
	Input HP	2.00	**1.02**	0.67	2.00	**1.02**	0.67	2.00	**1.02**	0.67	2.00	**1.02**	0.67
147.66	Output Torque, In-Lb	5400	**5400**	5400	5400	**5400**	5400	5400	**5400**	5400	5400	**5400**	5400
	OHL Input Shaft	**(A)**	**215**	225	**(A)**	**345**	360	**(A)**	**455**	470	**(A)**	**710**	735
	OHL Output Shaft	2200	**2200**	2200	2200	**2200**	2200	2200	**2200**	2200	2200	**2200**	2200
	Output RPM	20	**10**	7	20	**10**	7	20	**10**	7	-	**-**	-
	Input HP	1.71	**0.87**	0.57	1.71	**0.87**	0.57	1.71	**0.87**	0.57	-	**-**	-
173.17	Output Torque, In-Lb	5400	**5400**	5400	5400	**5400**	5400	5400	**5400**	5400	-	**-**	-
	OHL Input Shaft	**(A)**	**215**	225	**(A)**	**345**	360	**(A)**	**455**	470	-	**-**	-
	OHL Output Shaft	2200	**2200**	2200	2200	**2200**	2200	2200	**2200**	2200	-	**-**	-
	Output RPM	18	**9**	6	18	**9**	6	18	**9**	6	-	**-**	-
	Input HP	1.55	**0.78**	0.52	1.55	**0.78**	0.52	1.55	**0.78**	0.52	-	**-**	-
191.09	Output Torque, In-Lb	5400	**5400**	5400	5400	**5400**	5400	5400	**5400**	5400	-	**-**	-
	OHL Input Shaft	**(A)**	**215**	225	**(A)**	**345**	360	**(A)**	**455**	470	-	**-**	-
	OHL Output Shaft	2200	**2200**	2200	2200	**2200**	2200	2200	**2200**	2200	-	**-**	-
	Output RPM	16	**8**	5	16	**8**	5	16	**8**	5	-	**-**	-
	Input HP	1.39	**0.71**	0.47	1.39	**0.71**	0.47	1.39	**0.71**	0.47	-	**-**	-
212.58	Output Torque, In-Lb	5400	**5400**	5400	5400	**5400**	5400	5400	**5400**	5400	-	**-**	-
	OHL Input Shaft	**(A)**	**215**	225	**(A)**	**345**	360	(A)	**455**	470	-	**-**	-
	OHL Output Shaft	2200	**2200**	2200	2200	**2200**	2200	2200	**2200**	2200	-	**-**	-
	Output RPM	14	**7**	5	14	**7**	5	-	**-**	-	-	**-**	-
	Input HP	1.24	**0.63**	0.42	1.24	**0.63**	0.42	-	**-**	-	-	**-**	-
238.86	Output Torque, In-Lb	5400	**5400**	5400	5400	**5400**	5400	-	**-**	-	-	**-**	-
	OHL Input Shaft	(A)	**215**	225	(A)	**345**	360	-	**-**	-	-	**-**	-
	OHL Output Shaft	2200	**2200**	2200	2200	**2200**	2200	-	**-**	-	-	**-**	-

Service factor: 1.0

(A) (B) (C) - See footnotes page on inside back cover

Blank areas (-) indicate configuration not available

ILH 38

Size: H_383

Triple reduction – Clamp collar, three-piece coupled, separate

NEMA motor frame		56C			—			140TC		
IEC motor frame		71D			80D			90D		
Separate group		71			80			90		
Ratio	**Output Rating data**	**3450**	**1750**	**1160**	**3450**	**1750**	**1160**	**3450**	**1750**	**1160**
	Output RPM	112	**57**	38	112	**57**	38	112	**57**	38
	Input Hp (max) **(C)**	2.58	**1.72**	1.17	2.58	**1.72**	1.17	2.58	**1.72**	1.17
30.74	Output torque, in-lb	1451	**1905**	1947	1451	**1905**	1947	1451	**1905**	1947
	OHL input shaft	**(A)**	**210**	218	**(A)**	**343**	357	**(A)**	**455**	473
	OHL output shaft **(B)**	416	**881**	1117	416	**881**	1117	416	**881**	1117
	Output RPM	102	**52**	34	102	**52**	34	102	**52**	34
	Input Hp (max) **(C)**	2.42	**1.60**	1.06	2.42	**1.60**	1.06	2.42	**1.60**	1.06
33.82	Output torque, in-lb	1493	**1947**	1947	1493	**1947**	1947	1493	**1947**	1947
	OHL input shaft	**(A)**	**210**	219	**(A)**	**344**	358	**(A)**	**455**	473
	OHL output shaft **(B)**	416	**881**	1117	416	**881**	1117	416	**881**	1117
	Output RPM	88	**45**	30	88	**45**	30	88	**45**	30
	Input Hp (max) **(C)**	2.18	**1.38**	0.91	2.18	**1.38**	0.91	2.18	**1.38**	0.91
39.28	Output torque, in-lb	1561	**1947**	1947	1561	**1947**	1947	1561	**1947**	1947
	OHL input shaft	**(A)**	**211**	219	**(A)**	**345**	359	**(A)**	**456**	474
	OHL output shaft **(B)**	546	**881**	1117	546	**881**	1117	546	**881**	1117
	Output RPM	81	**41**	27	81	**41**	27	81	**41**	27
	Input Hp (max) **(C)**	2.06	**1.27**	0.84	2.06	**1.27**	0.84	2.06	**1.27**	0.84
42.53	Output torque, in-lb	1599	**1947**	1947	1599	**1947**	1947	1599	**1947**	1947
	OHL input shaft	(A)	211	219	**(A)**	**345**	359	**(A)**	**456**	475
	OHL output shaft **(B)**	546	**881**	1117	546	**881**	1117	546	**881**	1117
	Output RPM	72	**36**	24	72	**36**	24	72	**36**	24
	Input Hp (max) **(C)**	1.89	**1.12**	0.75	1.89	**1.12**	0.75	1.89	**1.12**	0.75
48.10	Output torque, in-lb	1659	**1947**	1947	1659	**1947**	1947	1659	**1947**	1947
	OHL input shaft	**(A)**	**211**	220	**(A)**	**346**	359	**(A)**	**457**	475
	OHL output shaft **(B)**	546	**1117**	1117	546	**1117**	1117	546	**1117**	1117
	Output RPM	65	**33**	22	65	**33**	22	65	**33**	22
	Input Hp (max) **(C)**	1.77	**1.02**	0.68	1.77	**1.02**	0.68	1.77	**1.02**	0.68
52.86	Output torque, in-lb	1706	**1947**	1947	1706	**1947**	1947	1706	**1947**	1947
	OHL input shaft	**(A)**	**211**	220	**(A)**	**346**	360	**(A)**	**457**	475
	OHL output shaft **(B)**	546	**1117**	1117	546	**1117**	1117	546	**1117**	1117
	Output RPM	59	**30**	20	59	**30**	20	59	**30**	20
	Input Hp (max) **(C)**	1.65	**0.93**	0.61	1.65	**0.93**	0.61	1.65	**0.93**	0.61
58.30	Output torque, in-lb	1758	**1947**	1947	1758	**1947**	1947	1758	**1947**	1947
	OHL input shaft	**(A)**	**211**	220	**(A)**	**346**	360	**(A)**	**457**	475
	OHL output shaft **(B)**	881	**1117**	1117	881	**1117**	1117	881	**1117**	1117
	Output RPM	53	**27**	18	53	**27**	18	–	–	–
	Input Hp (max) **(C)**	1.54	**0.84**	0.55	1.54	**0.84**	0.55	–	–	–
64.58	Output torque, in-lb	1812	**1947**	1947	1812	**1947**	1947	–	–	–
	OHL input shaft	**(A)**	**211**	220	**(A)**	**346**	360	–	–	–
	OHL output shaft **(B)**	881	**1117**	1117	881	**1117**	1117	–	–	–
	Output RPM	48	**24**	16	48	**24**	16	–	–	–
	Input Hp (max) **(C)**	1.43	**0.75**	0.50	1.43	**0.75**	0.50	–	–	–
71.91	Output torque, in-lb	1873	**1947**	1947	1873	**1947**	1947	–	–	–
	OHL input shaft	**(A)**	**210**	218	**(A)**	**346**	360	–	–	–
	OHL output shaft **(B)**	881	**1117**	1117	881	**1117**	1117	–	–	–
	Output RPM	42	**21**	14	42	**21**	14	–	–	–
	Input Hp (max) **(C)**	1.29	**0.66**	0.43	1.29	**0.66**	0.43	–	–	–
82.52	Output torque, in-lb	1947	**1947**	1947	1947	**1947**	1947	–	–	–
	OHL input shaft	**(A)**	**210**	218	**(A)**	**346**	360	–	–	–
	OHL output shaft **(B)**	881	**1117**	1117	881	**1117**	1117	–	–	–
	Output RPM	38	**19**	13	38	**19**	13	–	–	–
	Input Hp (max) **(C)**	1.17	**0.59**	0.39	1.17	**0.59**	0.39	–	–	–
91.34	Output torque, in-lb	1947	**1947**	1947	1947	**1947**	1947	–	–	–
	OHL input shaft	**(A)**	**210**	219	**(A)**	**346**	360	–	–	–
	OHL output shaft **(B)**	1117	**1117**	1117	1117	**1117**	1117	–	–	–

Service factor: 1.0

(A) (B) (C) - See footnotes page on inside back cover

Blank areas (-) indicate configuration not available

ILH 38

Size: H_383

Triple reduction – Clamp collar, three-piece coupled, separate

NEMA motor frame		56C			—			140TC		
IEC motor frame		71D			80D			90D		
Separate group		71			80			90		
Ratio	Output Rating data	3450	1750	1160	3450	1750	1160	3450	1750	1160
	Output RPM	33	**17**	11	33	**17**	11	–	–	–
	Input Hp (max) **(C)**	1.03	**0.52**	0.34	1.03	**0.52**	0.34	–	–	–
103.89	Output torque, in-lb	1947	**1947**	1947	1947	**1947**	1947	–	–	–
	OHL input shaft	**(A)**	**211**	219	**(A)**	**346**	360	–	–	–
	OHL output shaft **(B)**	1117	**1117**	1117	1117	**1117**	1117	–	–	-
	Output RPM	29	**15**	10	29	**15**	10	–	–	–
	Input Hp (max) **(C)**	0.90	**0.46**	0.30	0.90	**0.46**	0.30	–	–	–
118.55	Output torque, in-lb	1947	**1947**	1947	1947	**1947**	1947	–	–	–
	OHL input shaft	**(A)**	**211**	219	**(A)**	**346**	360	–	–	–
	OHL output shaft **(B)**	1117	**1117**	1117	1117	**1117**	1117	–	–	–
	Output RPM	26	**13**	9	26	**13**	9	–	–	–
	Input Hp (max) **(C)**	0.80	**0.40**	0.27	0.80	**0.40**	0.27	–	–	–
133.57	Output torque, in-lb	1947	**1947**	1947	1947	**1947**	1947	–	–	–
	OHL input shaft	(A)	**211**	219	**(A)**	**346**	360	–	–	–
	OHL output shaft **(B)**	1117	**1117**	1117	1117	**1117**	1117	–	–	–
	Output RPM	23	**12**	8	23	**12**	8	–	–	–
	Input Hp (max) **(C)**	0.71	**0.36**	0.24	0.71	**0.36**	0.24	–	–	–
149.26	Output torque, in-lb	1947	**1947**	1947	1947	**1947**	1947	–	–	–
	OHL input shaft	**(A)**	**211**	220	**(A)**	**347**	360	–	–	–
	OHL output shaft **(B)**	1117	**1117**	1117	1117	**1117**	1117	–	–	–
	Output RPM	20	**10**	7	20	**10**	7	–	–	–
	Input Hp (max) **(C)**	0.63	**0.32**	0.21	0.63	**0.32**	0.21	–	–	–
170.24	Output torque, in-lb	1947	**1947**	1947	1947	**1947**	1947	–	–	–
	OHL input shaft	**(A)**	**211**	220	**(A)**	**347**	360	–	–	–
	OHL output shaft **(B)**	1117	**1117**	1117	1117	**1117**	1117	–	–	–
	Output RPM	18	**9**	6	–	**–**	–	–	–	–
	Input Hp (max) **(C)**	0.56	**0.28**	0.19	–	**–**	–	–	–	–
191.75	Output torque, in-lb	1947	**1947**	1947	–	**–**	–	–	–	–
	OHL input shaft	**(A)**	**211**	220	–	**–**	–	–	–	–
	OHL output shaft **(B)**	1117	**1117**	1117	–	**–**	–	–	–	–

Service factor: 1.0

(A) (B) (C) - See footnotes page on inside back cover

Blank areas (-) indicate configuration not available

ILH 38

Size: H_384

Four-stage reduction – Clamp collar, three-piece coupled, separate

NEMA motor frame		56C			—			140TC			180TC		
IEC motor frame		71D			80D			90D			100D		
Separate group		71			80			90			100		
Ratio	Output Rating data	3450	1750	1160	3450	1750	1160	3450	1750	1160	3450	1750	1160
	Output RPM	17.57	8.91	5.91	17.57	8.91	5.91	17.57	8.91	5.91	17.57	8.91	5.91
	Input Hp (max) (C)	0.54	0.28	0.18	0.54	0.28	0.18	0.54	0.28	0.18	0.54	0.28	0.18
196.31	Output torque, in-lb	1947	1947	1947	1947	1947	1947	1947	1947	1947	1947	1947	1947
	OHL input shaft	(A)	(A)	(A)	(A)	(A)	(A)	(A)	(A)	(A)	(A)	(A)	(A)
	OHL output shaft (B)	881	1117	1117	881	1117	1117	881	1117	1117	881	1117	1117
	Output RPM	14.83	7.52	4.98	14.83	7.52	4.98	14.83	7.52	4.98	14.83	7.52	4.98
	Input Hp (max) (C)	0.46	0.23	0.15	0.46	0.23	0.15	0.46	0.23	0.15	0.46	0.23	0.16
232.71	Output torque, in-lb	1947	1947	1947	1947	1947	1947	1947	1947	1947	1947	1947	1947
	OHL input shaft	(A)	(A)	(A)	(A)	(A)	(A)	(A)	(A)	(A)	(A)	(A)	(A)
	OHL output shaft (B)	1117	1117	1117	1117	1117	1117	1117	1117	1117	1117	1117	1117
	Output RPM	13.28	6.74	4.47	13.28	6.74	4.47	13.28	6.74	4.47	13.28	6.74	4.47
	Input Hp (max) (C)	0.41	0.21	0.14	0.41	0.21	0.14	0.41	0.21	0.14	0.41	0.21	0.14
259.73	Output torque, in-lb	1947	1947	1947	1947	1947	1947	1947	1947	1947	1947	1947	1947
	OHL input shaft	(A)	(A)	(A)	(A)	(A)	(A)	(A)	(A)	(A)	(A)	(A)	(A)
	OHL output shaft (B)	1117	1117	1117	1117	1117	1117	1117	1117	1117	1117	1117	1117
	Output RPM	11.41	5.79	3.84	11.41	5.79	3.84	11.41	5.79	3.84	11.41	5.79	3.84
	Input Hp (max) (C)	0.35	0.18	0.12	0.35	0.18	0.12	0.35	0.18	0.12	0.35	0.18	0.12
302.34	Output torque, in-lb	1947	1947	1947	1947	1947	1947	1947	1947	1947	1947	1947	1947
	OHL input shaft	(A)	(A)	(A)	(A)	(A)	(A)	(A)	(A)	(A)	(A)	(A)	(A)
	OHL output shaft (B)	1117	1117	1117	1117	1117	1117	1117	1117	1117	1117	1117	1117
	Output RPM	10.03	5.09	3.37	10.03	5.09	3.37	10.03	5.09	3.37	10.03	5.09	3.37
	Input Hp (max) (C)	0.31	0.16	0.10	0.31	0.16	0.10	0.31	0.16	0.10	0.31	0.16	0.11
343.88	Output torque, in-lb	1947	1947	1947	1947	1947	1947	1947	1947	1947	1947	1947	1947
	OHL input shaft	(A)	(A)	(A)	(A)	(A)	(A)	(A)	(A)	(A)	(A)	(A)	(A)
	OHL output shaft (B)	1117	1117	1117	1117	1117	1117	1117	1117	1117	1117	1117	1117
	Output RPM	9.26	4.70	3.11	9.26	4.70	3.11	9.26	4.70	3.11	9.26	4.70	3.11
	Input Hp (max) (C)	0.29	0.15	0.10	0.29	0.15	0.10	0.29	0.15	0.10	0.29	0.15	0.10
372.49	Output torque, in-lb	1947	1947	1947	1947	1947	1947	1947	1947	1947	1947	1947	1947
	OHL input shaft	(A)	(A)	(A)	(A)	(A)	(A)	(A)	(A)	(A)	(A)	(A)	(A)
	OHL output shaft (B)	881	1117	1117	881	1117	1117	881	1117	1117	881	1117	1117
	Output RPM	8.47	4.29	2.85	8.47	4.29	2.85	8.47	4.29	2.85	8.47	4.29	2.85
	Input Hp (max) (C)	0.26	0.13	0.09	0.26	0.13	0.09	0.26	0.13	0.09	0.26	0.13	0.09
407.48	Output torque, in-lb	1947	1947	1947	1947	1947	1947	1947	1947	1947	1947	1947	1947
	OHL input shaft	(A)	(A)	(A)	(A)	(A)	(A)	(A)	(A)	(A)	(A)	(A)	(A)
	OHL output shaft (B)	1117	1117	1117	1117	1117	1117	1117	1117	1117	1117	1117	1117
	Output RPM	8.03	4.07	2.70	8.03	4.07	2.70	8.03	4.07	2.70	8.03	4.07	2.70
	Input Hp (max) (C)	0.25	0.13	0.08	0.25	0.13	0.08	0.25	0.13	0.08	0.25	0.13	0.08
429.52	Output torque, in-lb	1947	1947	1947	1947	1947	1947	1947	1947	1947	1947	1947	1947
	OHL input shaft	(A)	(A)	(A)	(A)	(A)	(A)	(A)	(A)	(A)	(A)	(A)	(A)
	OHL output shaft (B)	1117	1117	1117	1117	1117	1117	1117	1117	1117	1117	1117	1117
	Output RPM	7.93	4.02	2.67	7.93	4.02	2.67	7.93	4.02	2.67	7.93	4.02	2.67
	Input Hp (max) (C)	0.24	0.12	0.08	0.24	0.12	0.08	0.24	0.12	0.08	0.24	0.12	0.08
435.08	Output torque, in-lb	1947	1947	1947	1947	1947	1947	1947	1947	1947	1947	1947	1947
	OHL input shaft	(A)	(A)	(A)	(A)	(A)	(A)	(A)	(A)	(A)	(A)	(A)	(A)
	OHL output shaft (B)	1117	1117	1117	1117	1117	1117	1117	1117	1117	1117	1117	1117
	Output RPM	7.29	3.70	2.45	7.29	3.70	2.45	7.29	3.70	2.45	7.29	3.70	2.45
	Input Hp (max) (C)	0.23	0.11	0.08	0.23	0.11	0.08	0.23	0.11	0.08	0.23	0.11	0.08
473.14	Output torque, in-lb	1947	1947	1947	1947	1947	1947	1947	1947	1947	1947	1947	1947
	OHL input shaft	(A)	(A)	(A)	(A)	(A)	(A)	(A)	(A)	(A)	(A)	(A)	(A)
	OHL output shaft (B)	1117	1117	1117	1117	1117	1117	1117	1117	1117	1117	1117	1117

Service factor: 1.0

(A) (B) (C) - See footnotes page on inside back cover

Blank areas (-) indicate configuration not available

ILH 38

Size: H_384

Four-stage reduction – Clamp collar, three-piece coupled, separate

NEMA motor frame		56C			—			140TC			180TC		
IEC motor frame		71D			80D			90D			100D		
Separate group		71			80			90			100		
Ratio	Output Rating data	3450	1750	1160	3450	1750	1160	3450	1750	1160	3450	1750	1160
	Output RPM	6.98	3.54	2.35	6.98	3.54	2.35	6.98	3.54	2.35	6.98	3.54	2.35
	Input Hp (max) (C)	0.22	0.11	0.07	0.22	0.11	0.07	0.22	0.11	0.07	0.22	0.11	0.07
494.05	Output torque, in-lb	1947	1947	1947	1947	1947	1947	1947	1947	1947	1947	1947	1947
	OHL input shaft	(A)	(A)	(A)	(A)	(A)	(A)	(A)	(A)	(A)	(A)	(A)	(A)
	OHL output shaft (B)	1117	1117	1117	1117	1117	1117	1117	1117	1117	1117	1117	1117
	Output RPM	6.76	3.43	2.27	6.76	3.43	2.27	6.76	3.43	2.27	6.76	3.43	2.27
	Input Hp (max) (C)	0.21	0.11	0.07	0.21	0.11	0.07	0.21	0.11	0.07	0.21	0.11	0.07
510.72	Output torque, in-lb	1947	1947	1947	1947	1947	1947	1947	1947	1947	1947	1947	1947
	OHL input shaft	(A)	(A)	(A)	(A)	(A)	(A)	(A)	(A)	(A)	(A)	(A)	(A)
	OHL output shaft (B)	1117	1117	1117	1117	1117	1117	1117	1117	1117	1117	1117	1117
	Output RPM	6.30	3.19	2.12	6.30	3.19	2.12	6.30	3.19	2.12	6.30	3.19	2.12
	Input Hp (max) (C)	0.19	0.10	0.07	0.19	0.10	0.07	0.19	0.10	0.07	0.19	0.10	0.07
547.78	Output torque, in-lb	1947	1947	1947	1947	1947	1947	1947	1947	1947	1947	1947	1947
	OHL input shaft	(A)	(A)	(A)	(A)	(A)	(A)	(A)	(A)	(A)	(A)	(A)	(A)
	OHL output shaft (B)	1117	1117	1117	1117	1117	1117	1117	1117	1117	1117	1117	1117
	Output RPM	6.00	3.04	2.02	6.00	3.04	2.02	6.00	3.04	2.02	6.00	3.04	2.02
	Input Hp (max) (C)	0.19	0.09	0.06	0.19	0.09	0.06	0.19	0.09	0.06	0.19	0.09	0.06
575.25	Output torque, in-lb	1947	1947	1947	1947	1947	1947	1947	1947	1947	1947	1947	1947
	OHL input shaft	(A)	(A)	(A)	(A)	(A)	(A)	(A)	(A)	(A)	(A)	(A)	(A)
	OHL output shaft (B)	1117	1117	1117	1117	1117	1117	1117	1117	1117	1117	1117	1117
	Output RPM	5.52	2.80	1.86	5.52	2.80	1.86	5.52	2.80	1.86	5.52	2.80	1.86
	Input Hp (max) (C)	0.17	0.09	0.06	0.17	0.09	0.06	0.17	0.09	0.06	0.17	0.09	0.06
624.78	Output torque, in-lb	1947	1947	1947	1947	1947	1947	1947	1947	1947	1947	1947	1947
	OHL input shaft	(A)	(A)	(A)	(A)	(A)	(A)	(A)	(A)	(A)	(A)	(A)	(A)
	OHL output shaft (B)	1117	1117	1117	1117	1117	1117	1117	1117	1117	1117	1117	1117
	Output RPM	5.05	2.56	1.70	5.05	2.56	1.70	5.05	2.56	1.70	5.05	2.56	1.70
	Input Hp (max) (C)	0.16	0.08	0.05	0.16	0.08	0.05	0.16	0.08	0.05	0.16	0.08	0.05
683.61	Output torque, in-lb	1947	1947	1947	1947	1947	1947	1947	1947	1947	1947	1947	1947
	OHL input shaft	(A)	(A)	(A)	(A)	(A)	(A)	(A)	(A)	(A)	(A)	(A)	(A)
	OHL output shaft (B)	1117	1117	1117	1117	1117	1117	1117	1117	1117	1117	1117	1117
	Output RPM	4.90	2.49	1.65	4.90	2.49	1.65	4.90	2.49	1.65	4.90	2.49	1.65
	Input Hp (max) (C)	0.15	0.08	0.05	0.15	0.08	0.05	0.15	0.08	0.05	0.15	0.08	0.05
703.72	Output torque, in-lb	1947	1947	1947	1947	1947	1947	1947	1947	1947	1947	1947	1947
	OHL input shaft	(A)	(A)	(A)	(A)	(A)	(A)	(A)	(A)	(A)	(A)	(A)	(A)
	OHL output shaft (B)	1117	1117	1117	1117	1117	1117	1117	1117	1117	1117	1117	1117
	Output RPM	4.61	2.34	1.55	4.61	2.34	1.55	4.61	2.34	1.55	–	–	–
	Input Hp (max) (C)	0.14	0.07	0.05	0.14	0.07	0.05	0.14	0.07	0.05	–	–	–
748.01	Output torque, in-lb	1947	1947	1947	1947	1947	1947	1947	1947	1947	–	–	–
	OHL input shaft	(A)	(A)	(A)	(A)	(A)	(A)	(A)	(A)	(A)	–	–	–
	OHL output shaft (B)	1117	1117	1117	1117	1117	1117	1117	1117	1117	–	–	–
	Output RPM	4.34	2.20	1.46	4.34	2.20	1.46	4.34	2.20	1.46	4.34	2.20	1.46
	Input Hp (max) (C)	0.13	0.07	0.05	0.13	0.07	0.05	0.13	0.07	0.05	0.13	0.07	0.05
795.76	Output torque, in-lb	1947	1947	1947	1947	1947	1947	1947	1947	1947	1947	1947	1947
	OHL input shaft	(A)	(A)	(A)	(A)	(A)	(A)	(A)	(A)	(A)	(A)	(A)	(A)
	OHL output shaft (B)	1117	1117	1117	1117	1117	1117	1117	1117	1117	1117	1117	1117
	Output RPM	4.04	2.05	1.36	4.04	2.05	1.36	4.04	2.05	1.36	–	–	–
	Input Hp (max) (C)	0.12	0.06	0.04	0.12	0.06	0.04	0.12	0.06	0.04	–	–	–
853.56	Output torque, in-lb	1947	1947	1947	1947	1947	1947	1947	1947	1947	–	–	–
	OHL input shaft	(A)	(A)	(A)	(A)	(A)	(A)	(A)	(A)	(A)	–	–	–
	OHL output shaft (B)	1117	1117	1117	1117	1117	1117	1117	1117	1117	–	–	–

Service factor: 1.0

(A) (B) (C) - See footnotes page on inside back cover

Blank areas (-) indicate configuration not available

ILH 38

Size: H_384

Four-stage reduction – Clamp collar, three-piece coupled, separate

NEMA motor frame		56C			—			140TC			180TC		
IEC motor frame		71D			80D			90D			100D		
Separate group		71			80			90			100		
Ratio	Output Rating data	3450	1750	1160	3450	1750	1160	3450	1750	1160	3450	1750	1160
	Output RPM	3.84	1.95	1.29	3.84	1.95	1.29	3.84	1.95	1.29	–	–	–
	Input Hp (max) (C)	0.12	0.06	0.04	0.12	0.06	0.04	0.12	0.06	0.04	–	–	–
898.93	Output torque, in-lb	1947	1947	1947	1947	1947	1947	1947	1947	1947	–	–	–
	OHL input shaft	(A)	(A)	(A)	(A)	(A)	(A)	(A)	(A)	(A)	–	–	–
	OHL output shaft (B)	1117	1117	1117	1117	1117	1117	1117	1117	1117	–	–	–
	Output RPM	3.59	1.82	1.21	3.59	1.82	1.21	3.59	1.82	1.21	–	–	–
	Input Hp (max) (C)	0.11	0.06	0.04	0.11	0.06	0.04	0.11	0.06	0.04	–	–	–
961.70	Output torque, in-lb	1947	1947	1947	1947	1947	1947	1947	1947	1947	–	–	–
	OHL input shaft	(A)	(A)	(A)	(A)	(A)	(A)	(A)	(A)	(A)	–	–	–
	OHL output shaft (B)	1117	1117	1117	1117	1117	1117	1117	1117	1117	–	–	–
	Output RPM	3.42	1.74	1.15	3.42	1.74	1.15	3.42	1.74	1.15	–	–	–
	Input Hp (max) (C)	0.11	0.05	0.04	0.11	0.05	0.04	0.11	0.05	0.04	–	–	–
1007.82	Output torque, in-lb	1947	1947	1947	1947	1947	1947	1947	1947	1947	–	–	–
	OHL input shaft	(A)	(A)	(A)	(A)	(A)	(A)	(A)	(A)	(A)	–	–	–
	OHL output shaft (B)	1117	1117	1117	1117	1117	1117	1117	1117	1117	–	–	–
	Output RPM	3.21	1.63	1.08	3.21	1.63	1.08	3.21	1.63	1.08	–	–	–
	Input Hp (max) (C)	0.10	0.05	0.03	0.10	0.05	0.03	0.10	0.05	0.03	–	–	–
1074.67	Output torque, in-lb	1947	1947	1947	1947	1947	1947	1947	1947	1947	–	–	–
	OHL input shaft	(A)	(A)	(A)	(A)	(A)	(A)	(A)	(A)	(A)	–	–	–
	OHL output shaft (B)	1117	1117	1117	1117	1117	1117	1117	1117	1117	–	–	–
	Output RPM	3.01	1.53	1.01	3.01	1.53	1.01	3.01	1.53	1.01	–	–	–
	Input Hp (max) (C)	0.09	0.05	0.03	0.09	0.05	0.03	0.09	0.05	0.03	–	–	–
1145.72	Output torque, in-lb	1947	1947	1947	1947	1947	1947	1947	1947	1947	–	–	–
	OHL input shaft	(A)	(A)	(A)	(A)	(A)	(A)	(A)	(A)	(A)	–	–	–
	OHL output shaft (B)	1117	1117	1117	1117	1117	1117	1117	1117	1117	–	–	–
	Output RPM	2.78	1.41	0.94	2.78	1.41	0.94	–	–	–	–	–	–
	Input Hp (max) (C)	0.09	0.04	0.03	0.09	0.04	0.03	–	–	–	–	–	–
1238.86	Output Torque, In–Lb	1947	1947	1947	1947	1947	1947	–	–	–	–	–	–
	OHL input shaft	(A)	(A)	(A)	(A)	(A)	(A)	–	–	–	–	–	–
	OHL output shaft (B)	1117	1117	1117	1117	1117	1117	–	–	–	–	–	–
	Output RPM	2.50	1.27	0.84	2.50	1.27	0.84	2.50	1.27	0.84	–	–	–
	Input Hp (max) (C)	0.08	0.04	0.03	0.08	0.04	0.03	0.08	0.04	0.03	–	–	–
1380.60	Output torque, in-lb	1947	1947	1947	1947	1947	1947	1947	1947	1947	–	–	–
	OHL input shaft	(A)	(A)	(A)	(A)	(A)	(A)	(A)	(A)	(A)	–	–	–
	OHL output shaft (B)	1117	1117	1117	1117	1117	1117	1117	1117	1117	–	–	–
	Output RPM	2.44	1.24	0.82	2.44	1.24	0.82	–	–	–	–	–	–
	Input Hp (max) (C)	0.08	0.04	0.03	0.08	0.04	0.03	–	–	–	–	–	–
1412.99	Output torque, in-lb	1947	1947	1947	1947	1947	1947	–	–	–	–	–	–
	OHL input shaft	(A)	(A)	(A)	(A)	(A)	(A)	–	–	–	–	–	–
	OHL output shaft (B)	1117	1117	1117	1117	1117	1117	–	–	–	–	–	–
	Output RPM	2.17	1.10	0.73	–	–	–	–	–	–	–	–	–
	Input Hp (max) (C)	0.07	0.03	0.02	–	–	–	–	–	–	–	–	–
1588.34	Output torque, in-lb	1947	1947	1947	–	–	–	–	–	–	–	–	–
	OHL input shaft	(A)	(A)	(A)	–	–	–	–	–	–	–	–	–
	OHL output shaft (B)	1117	1117	1117	–	–	–	–	–	–	–	–	–

Service factor: 1.0

(A) (B) (C) - See footnotes page on inside back cover

Blank areas (-) indicate configuration not available

ILH 38

Size: H_385

Five-stage reduction – Clamp collar, three-piece coupled, separate

NEMA motor frame		56C			—			140TC			180TC		
IEC motor frame		71D			80D			90D			100D		
Separate group		71			80			90			100		
Ratio	**Output Rating data**	**3450**	**1750**	**1160**	**3450**	**1750**	**1160**	**3450**	**1750**	**1160**	**3450**	**1750**	**1160**
	Output RPM	1.71	**0.87**	0.58	1.71	**0.87**	0.58	1.71	**0.87**	0.58	1.71	**0.87**	0.58
	Input Hp (max) **(C)**	0.053	**0.027**	0.0178	0.053	**0.027**	0.0178	0.053	**0.027**	0.0178	0.053	**0.027**	0.0180
2012.24	Output torque, in-lb	1947	**1947**	1947	1947	**1947**	1947	1947	**1947**	1947	1947	**1947**	1947
	OHL input shaft	(A)	(A)	(A)	(A)	(A)	(A)	(A)	(A)	(A)	(A)	(A)	(A)
	OHL output shaft **(B)**	1117	**1117**	1117	1117	**1117**	1117	1117	**1117**	1117	1117	**1117**	1117
	Output RPM	1.30	**0.66**	0.44	1.30	**0.66**	0.44	1.30	**0.66**	0.44	1.30	**0.66**	0.44
	Input Hp (max) **(C)**	0.040	**0.020**	0.0135	0.040	**0.020**	0.0135	0.040	**0.020**	0.0135	0.040	**0.020**	0.0135
2662.55	Output torque, in-lb	1947	**1947**	1947	1947	**1947**	1947	1947	**1947**	1947	1947	**1947**	1947
	OHL input shaft	(A)	(A)	(A)	(A)	(A)	(A)	(A)	(A)	(A)	(A)	(A)	(A)
	OHL output shaft **(B)**	1117	**1117**	1117	1117	**1117**	1117	1117	**1117**	1117	1117	**1117**	1117
	Output RPM	1.30	**0.66**	0.44	1.30	**0.66**	0.44	1.30	**0.66**	0.44	1.30	**0.66**	0.44
	Input Hp (max) **(C)**	0.040	**0.020**	0.0136	0.040	**0.020**	0.0136	0.040	**0.020**	0.0136	0.040	**0.020**	0.0136
2719.02	Output torque, in-lb	1947	**1947**	1947	1947	**1947**	1947	1947	**1947**	1947	1947	**1947**	1947
	OHL input shaft	(A)	(A)	(A)	(A)	(A)	(A)	(A)	(A)	(A)	(A)	(A)	(A)
	OHL output shaft **(B)**	1117	**1117**	1117	1117	**1117**	1117	1117	**1117**	1117	1117	**1117**	1117
	Output RPM	1.17	**0.59**	0.39	1.17	**0.59**	0.39	1.17	**0.59**	0.39	1.17	**0.59**	0.39
	Input Hp (max) **(C)**	0.036	**0.018**	0.0121	0.036	**0.018**	0.0121	0.036	**0.018**	0.0121	0.036	**0.018**	0.0121
2950.26	Output torque, in-lb	1947	**1947**	1947	1947	**1947**	1947	1947	**1947**	1947	1947	**1947**	1947
	OHL input shaft	(A)	(A)	(A)	(A)	(A)	(A)	(A)	(A)	(A)	(A)	(A)	(A)
	OHL output shaft **(B)**	1117	**1117**	1117	1117	**1117**	1117	1117	**1117**	1117	1117	**1117**	1117
	Output RPM	1.04	**0.53**	0.35	1.04	**0.53**	0.35	1.04	**0.53**	0.35	1.04	**0.53**	0.35
	Input Hp (max) **(C)**	0.032	**0.016**	0.0108	0.032	**0.016**	0.0108	0.032	**0.016**	0.0108	0.032	**0.016**	0.0108
3323.03	Output torque, in-lb	1947	**1947**	1947	1947	**1947**	1947	1947	**1947**	1947	1947	**1947**	1947
	OHL input shaft	(A)	(A)	(A)	(A)	(A)	(A)	(A)	(A)	(A)	(A)	(A)	(A)
	OHL output shaft **(B)**	1117	**1117**	1117	1117	**1117**	1117	1117	**1117**	1117	1117	**1117**	1117
	Output RPM	0.94	**0.47**	0.31	0.94	**0.47**	0.31	0.94	**0.47**	0.31	0.94	**0.47**	0.31
	Input Hp (max) **(C)**	0.029	**0.015**	0.0097	0.029	**0.015**	0.0097	0.029	**0.015**	0.0097	0.029	**0.015**	0.0097
3689.10	Output torque, in-lb	1947	**1947**	1947	1947	**1947**	1947	1947	**1947**	1947	1947	**1947**	1947
	OHL input shaft	(A)	(A)	(A)	(A)	(A)	(A)	(A)	(A)	(A)	(A)	(A)	(A)
	OHL output shaft **(B)**	1117	**1117**	1117	1117	**1117**	1117	1117	**1117**	1117	1117	**1117**	1117
	Output RPM	0.83	**0.42**	0.28	0.83	**0.42**	0.28	0.83	**0.42**	0.28	0.83	**0.42**	0.28
	Input Hp (max) **(C)**	0.026	**0.013**	0.0086	0.026	**0.013**	0.0086	0.026	**0.013**	0.0086	0.026	**0.013**	0.0086
4155.22	Output torque, in-lb	1947	**1947**	1947	1947	**1947**	1947	1947	**1947**	1947	1947	**1947**	1947
	OHL input shaft	(A)	(A)	(A)	(A)	(A)	(A)	(A)	(A)	(A)	(A)	(A)	(A)
	OHL output shaft **(B)**	1117	**1117**	1117	1117	**1117**	1117	1117	**1117**	1117	1117	**1117**	1117
	Output RPM	0.76	**0.38**	0.26	0.76	**0.38**	0.26	0.76	**0.38**	0.26	–	**–**	–
	Input Hp (max) **(C)**	0.023	**0.012**	0.0079	0.023	**0.012**	0.0079	0.023	**0.012**	0.0079	–	**–**	–
4546.72	Output torque, in-lb	1947	**1947**	1947	1947	**1947**	1947	1947	**1947**	1947	–	**–**	–
	OHL input shaft	(A)	(A)	(A)	(A)	(A)	(A)	(A)	(A)	(A)	–	**–**	–
	OHL output shaft **(B)**	1117	**1117**	1117	1117	**1117**	1117	1117	**1117**	1117	–	**–**	–
	Output RPM	0.72	**0.37**	0.24	0.72	**0.37**	0.24	0.72	**0.37**	0.24	–	**–**	–
	Input Hp (max) **(C)**	0.022	**0.011**	0.0075	0.022	**0.011**	0.0075	0.022	**0.011**	0.0075	–	**–**	–
4761.61	Output torque, in-lb	1947	**1947**	1947	1947	**1947**	1947	1947	**1947**	1947	–	**–**	–
	OHL input shaft	(A)	(A)	(A)	**(A)**	**(A)**	**(A)**	**(A)**	**(A)**	**(A)**	–	**–**	–
	OHL output shaft **(B)**	1117	**1117**	1117	1117	**1117**	1117	1117	**1117**	1117	–	**–**	–
	Output RPM	0.60	**0.30**	0.20	0.60	**0.30**	0.20	0.60	**0.30**	0.20	–	**–**	–
	Input Hp (max) **(C)**	0.018	**0.009**	0.0062	0.018	**0.009**	0.0062	0.018	**0.009**	0.0062	–	**–**	–
5794.97	Output torque, in-lb	1947	**1947**	1947	1947	**1947**	1947	1947	**1947**	1947	–	**–**	–
	OHL input shaft	**(A)**	**(A)**	**(A)**	**(A)**	**(A)**	**(A)**	**(A)**	**(A)**	**(A)**	–	**–**	–
	OHL output shaft **(B)**	1117	**1117**	1117	1117	**1117**	1117	1117	**1117**	1117	–	**–**	–

Service factor: 1.0

(A) (B) (C) - See footnotes page on inside back cover

Blank areas (-) indicate configuration not available

ILH 38

Size: H_385

Five-stage reduction – Clamp collar, three-piece coupled, separate

NEMA motor frame		56C			—			140TC			180TC		
IEC motor frame		71D			80D			90D			100D		
Separate group		71			80			90			100		
Ratio	**Output Rating data**	**3450**	**1750**	**1160**	**3450**	**1750**	**1160**	**3450**	**1750**	**1160**	**3450**	**1750**	**1160**
	Output RPM	0.57	**0.29**	0.19	0.57	**0.29**	0.19	0.57	**0.29**	0.19	–	–	–
	Input Hp (max) **(C)**	0.017	**0.009**	0.0059	0.017	**0.009**	0.0059	0.017	**0.009**	0.0059	–	–	–
6097.65	Output torque, in-lb	1947	**1947**	1947	1947	**1947**	1947	1947	**1947**	1947	–	–	–
	OHL input shaft	**(A)**	**(A)**	**(A)**	**(A)**	**(A)**	**(A)**	**(A)**	**(A)**	**(A)**	–	–	–
	OHL output shaft **(B)**	1117	**1117**	1117	1117	**1117**	1117	1117	**1117**	1117	–	–	–
	Output RPM	0.52	**0.26**	0.17	0.52	**0.26**	0.17	–	–	–	–	–	–
	Input Hp (max) **(C)**	0.016	**0.008**	0.0054	0.016	**0.008**	0.0054	–	–	–	–	–	–
6680.22	Output torque, in-lb	1947	**1947**	1947	1947	**1947**	1947	–	–	–	–	–	–
	OHL input shaft	(A)	(A)	(A)	(A)	(A)	**(A)**	–	–	–	–	–	–
	OHL output shaft **(B)**	1117	**1117**	1117	1117	**1117**	1117	–	–	–	–	–	–
	Output RPM	0.46	**0.23**	0.15	–	–	–	–	–	–	–	–	–
	Input Hp (max) **(C)**	0.014	**0.007**	0.0048	–	–	–	–	–	–	–	–	–
7510.99	Output torque, in-lb	1947	**1947**	1947	–	–	–	–	–	–	–	–	–
	OHL input shaft	**(A)**	**(A)**	**(A)**	–	–	–	–	–	–	–	–	–
	OHL output shaft **(B)**	1117	**1117**	1117	–	–	–	–	–	–	–	–	–

Service factor: 1.0

(A) (B) (C) - See footnotes page on inside back cover

Blank areas (-) indicate configuration not available

ILH 48

Size: H_481

Single reduction – Clamp collar, three-piece coupled, separate

NEMA motor frame		56C			—			140TC			180TC			—		
IEC motor frame		71D			80D			90D			100D			112D		
Separate group		71			80			90			100			112		
Ratio	Output Rating data	3450	1750	1160	3450	1750	1160	3450	1750	1160	3450	1750	1160	3450	1750	1160
	Output RPM	–	–	–	2270	**1151**	763	2270	**1151**	763	2270	**1151**	763	2270	**1151**	763
	Input Hp (max) **(C)**	–	–	–	4.85	**2.46**	1.63	9.86	**5.00**	3.31	20.42	**10.4**	6.87	24.92	**12.6**	8.38
1.52	Output torque, in-lb	–	–	–	135	**135**	135	274	**274**	274	567	**567**	567	692	**692**	692
	OHL input shaft	–	–	–	55	**55**	55	140	**140**	140	190	**190**	190	230	**230**	230
	OHL output shaft **(B)**	–	–	–	–	–	–	–	–	–	–	–	–	–	–	–
	Output RPM	–	–	–	1885	**958**	634	1885	**958**	634	1885	**958**	634	1885	**958**	634
	Input Hp (max) **(C)**	–	–	–	4.85	**2.46**	1.63	9.86	**5.00**	3.31	20.17	**10.2**	6.78	23.36	**11.9**	7.85
1.83	Output torque, in-lb	–	–	–	162	**162**	162	330	**330**	330	674	**674**	674	781	**781**	781
	OHL input shaft	–	–	–	55	**55**	55	140	**140**	140	190	**190**	190	230	**230**	230
	OHL output shaft **(B)**	–	–	–	–	–	–	–	–	–	–	–	–	–	–	–
	Output RPM	–	–	–	1605	**814**	540	1605	**814**	540	1605	**814**	540	1605	**814**	540
	Input Hp (max) **(C)**	–	–	–	4.85	**2.46**	1.63	9.86	**5.00**	3.31	19.06	**9.67**	6.41	21.90	**11.1**	7.36
2.15	Output torque, in-lb	–	–	–	190	**190**	490	387	**387**	387	749	**749**	749	860	**860**	860
	OHL input shaft	–	–	–	55	**55**	55	140	**140**	140	190	**190**	190	230	**230**	230
	OHL output shaft **(B)**	–	–	–	190	**190**	190	190	**190**	190	190	**190**	190	190	**190**	190
	Output RPM	1432	**726**	481	1432	**726**	481	1432	**726**	481	1432	**726**	481	1432	**726**	481
	Input Hp (max) **(C)**	3.98	**2.02**	1.34	4.85	**2.46**	1.63	9.86	**5.00**	3.31	18.24	**9.25**	6.13	20.84	**10.6**	7.01
2.41	Output torque, in-lb	175	**175**	175	214	**214**	214	434	**434**	434	803	**803**	803	917	**917**	917
	OHL input shaft	55	**55**	55	55	**55**	55	140	**140**	140	190	**190**	190	230	**230**	230
	OHL output shaft **(B)**	195	**195**	195	195	**195**	195	195	**195**	195	195	**195**	195	195	**195**	195
	Output RPM	1278	**648**	430	1278	**648**	430	1278	**648**	430	1278	**648**	430	1278	**648**	430
	Input Hp (max) **(C)**	3.98	**2.02**	1.34	4.85	**2.46**	1.63	9.58	**4.86**	3.22	17.39	**8.82**	5.85	19.79	**10.0**	6.66
2.70	Output torque, in-lb	196	**196**	196	239	**239**	239	473	**473**	473	858	**858**	858	976	**976**	976
	OHL input shaft	55	**55**	55	55	**55**	55	140	**140**	140	190	**190**	190	230	**230**	230
	OHL output shaft **(B)**	161	**161**	161	161	**161**	161	161	**161**	161	161	**161**	161	161	**161**	161
	Output RPM	1169	**594**	393	1169	**594**	393	1169	**594**	393	1169	**594**	393	1169	**594**	393
	Input Hp (max) **(C)**	3.98	**2.02**	1.34	4.85	**2.46**	1.63	9.27	**4.70**	3.12	16.72	**8.48**	5.62	18.98	**9.63**	6.38
2.95	Output torque, in-lb	215	**215**	215	261	**261**	261	499	**499**	499	901	**901**	901	1023	**1023**	1023
	OHL input shaft	55	**55**	55	55	**55**	55	140	**140**	140	190	**190**	190	230	**230**	230
	OHL output shaft **(B)**	124	**124**	124	124	**124**	124	124	**124**	124	124	**124**	124	124	**124**	124
	Output RPM	1065	**541**	358	1065	**541**	358	1065	**541**	358	1065	**541**	358	1065	**541**	358
	Input Hp (max) **(C)**	3.98	**2.02**	1.34	4.85	**2.46**	1.63	8.89	**4.51**	2.99	16.03	**8.13**	5.39	18.18	**9.22**	6.11
3.24	Output torque, in-lb	236	**236**	236	287	**287**	287	526	**526**	526	949	**949**	949	1076	**1076**	1076
	OHL input shaft	55	**55**	55	55	**55**	55	140	**140**	140	190	**190**	190	230	**230**	230
	OHL output shaft **(B)**	106	**106**	106	55	**106**	55	106	**106**	106	106	**106**	106	106	**106**	106
	Output RPM	969	**491**	326	969	**491**	326	969	**491**	326	969	**491**	326	969	**491**	326
	Input Hp (max) **(C)**	3.98	**2.02**	1.34	4.85	**2.46**	1.63	8.52	**4.32**	2.86	15.32	**7.77**	5.15	17.37	**8.81**	5.84
3.56	Output torque, in-lb	259	**259**	259	315	**315**	315	5.54	**554**	5.54	996	**996**	996	1130	**1130**	1130
	OHL input shaft	55	**55**	55	55	**55**	55	140	**140**	140	190	**190**	190	230	**230**	230
	OHL output shaft **(B)**	99	**99**	99	99	**99**	99	99	**99**	99	99	**99**	99	99	**99**	99
	Output RPM	891	**453**	300	891	**453**	300	891	**453**	300	891	**453**	300	891	**453**	300
	Input Hp (max) **(C)**	3.98	**2.02**	1.34	4.85	**2.46**	1.63	8.18	**4.15**	2.75	14.73	**7.47**	4.95	16.72	**8.48**	5.62
3.87	Output torque, in-lb	282	**282**	282	343	**343**	343	578	**578**	578	1041	**1041**	1041	1182	**1182**	1182
	OHL input shaft	55	**55**	55	55	**55**	55	140	**140**	140	190	**190**	190	230	**230**	230
	OHL output shaft **(B)**	99	**99**	99	99	**99**	99	99	**99**	99	99	**99**	99	99	**99**	99
	Output RPM	819	**415**	276	819	**415**	276	819	**415**	276	819	**415**	276	819	**415**	276
	Input Hp (max) **(C)**	3.98	**2.02**	1.34	4.85	**2.46**	1.63	7.85	**3.98**	2.64	14.14	**7.17**	4.75	16.13	**8.18**	5.42
4.21	Output torque, in-lb	306	**306**	306	373	**373**	373	603	**603**	603	1087	**1087**	1087	1240	**1240**	1240
	OHL input shaft	55	**55**	55	55	**55**	55	140	**140**	140	190	**190**	190	230	**230**	230
	OHL output shaft **(B)**	191	**191**	191	191	**191**	191	191	**191**	191	191	**191**	191	191	**191**	191
	Output RPM	747	**379**	251	747	**379**	251	747	**379**	251	747	**379**	251	747	**379**	251
	Input Hp (max) **(C)**	3.86	**1.96**	1.30	4.85	**2.46**	1.63	7.49	**3.80**	2.52	13.58	**6.89**	4.57	16.64	**6.92**	4.59
4.62	Output torque, in-lb	326	**326**	326	409	**409**	409	632	**632**	632	1146	**1146**	1146	1151	**1151**	1151
	OHL input shaft	55	**55**	55	55	**55**	55	140	**140**	140	190	**190**	191	230	**230**	230
	OHL output shaft **(B)**	191	**191**	191	191	**191**	191	191	**191**	191	191	**191**	191	191	**191**	191

Service factor: 1.0

(A) (B) (C) - See footnotes page on inside back cover

Blank areas (-) indicate configuration not available

ILH 48

Size: H_481

Single reduction – Clamp collar, three-piece coupled, separate

NEMA motor frame		56C			—			140TC			180TC			—		
IEC motor frame		71D			80D			90D			100D			112D		
Separate group		71			80			90			100			112		
Ratio	Output Rating data	3450	1750	1160	3450	1750	1160	3450	1750	1160	3450	1750	1160	3450	1750	1160
5.08	Output RPM	679	**344**	228	679	**344**	228	679	**344**	228	679	**344**	228	679	**344**	228
	Input Hp (max) **(C)**	3.59	**1.82**	1.21	4.85	**2.46**	1.63	7.12	**3.61**	2.39	11.43	**5.80**	3.84	11.43	**5.80**	3.84
	Output torque, in-lb	333	**333**	333	450	**450**	450	660	**660**	660	1061	**1061**	1061	1061	**1061**	1061
	OHL input shaft	55	**55**	55	55	**55**	55	140	**140**	140	190	**190**	190	230	**230**	230
	OHL output shaft **(B)**	303	**303**	303	303	**303**	303	303	**303**	303	303	**303**	303	303	**303**	303
5.85	Output RPM	590	**299**	198	590	**299**	198	590	**299**	198	590	**299**	198	590	**299**	198
	Input Hp (max) **(C)**	3.21	**1.63**	1.08	4.55	**2.31**	1.53	6.62	**3.36**	2.23	9.94	**5.04**	3.34	9.94	**5.04**	3.34
	Output torque, in-lb	343	**343**	343	487	**487**	487	708	**708**	708	1062	**1062**	1062	1062	**1062**	1062
	OHL input shaft	55	**55**	55	55	**55**	55	140	**140**	140	190	**190**	190	230	**230**	230
	OHL output shaft **(B)**	303	**303**	303	303	**303**	303	303	**303**	303	303	**303**	303	303	**303**	303
6.33	Output RPM	545	**276**	183	545	**276**	183	545	**276**	183	545	**276**	183	545	**276**	183
	Input Hp (max) **(C)**	3.02	**1.53**	1.01	4.36	**2.21**	1.46	6.37	**3.23**	2.14	8.79	**4.46**	2.96	8.79	**4.46**	2.96
	Output torque, in-lb	349	**349**	349	504	**504**	504	736	**736**	736	1017	**1017**	1017	1017	**1017**	1017
	OHL input shaft	55	**55**	55	55	**55**	55	140	**140**	140	190	**190**	190	230	**230**	230
	OHL output shaft **(B)**	627	**627**	627	627	**627**	627	627	**627**	627	627	**627**	627	627	**627**	627
7.00	Output RPM	493	**250**	166	493	**250**	166	493	**250**	166	493	**250**	166	–	**–**	–
	Input Hp (max) **(C)**	2.76	**1.40**	.93	4.12	**2.09**	1.39	6.01	**3.05**	2.02	6.72	**3.41**	2.26	–	**–**	–
	Output torque, in-lb	353	**353**	353	527	**527**	527	769	**769**	769	860	**860**	860	–	**–**	–
	OHL input shaft	55	**55**	55	55	**55**	55	140	**140**	140	190	**190**	190	–	**–**	–
	OHL output shaft **(B)**	627	**627**	627	627	**627**	627	627	**627**	627	627	**627**	627	–	**–**	–
8.17	Output RPM	422	**214**	142	422	**214**	142	422	**214**	142	–	**–**	–	–	**–**	–
	Input Hp (max) **(C)**	2.42	**1.23**	.82	3.73	**1.89**	1.25	5.05	**2.56**	1.70	–	**–**	–	–	**–**	–
	Output torque, in-lb	362	**362**	362	556	**556**	556	753	**753**	753	–	**–**	–	–	**–**	–
	OHL input shaft	55	**55**	55	55	**55**	55	140	**140**	140	–	**–**	–	–	**–**	–
	OHL output shaft **(B)**	711	**711**	711	711	**711**	711	711	**711**	711	–	**–**	–	–	**–**	–
9.09	Output RPM	380	**193**	128	380	**193**	128	380	**193**	128	–	**–**	–	–	**–**	–
	Input Hp (max) **(C)**	2.21	**1.12**	.74	3.41	**1.73**	1.15	3.41	**1.73**	1.15	–	**–**	–	–	**–**	–
	Output torque, in-lb	367	**367**	367	566	**566**	566	566	**566**	566	–	**–**	–	–	**–**	–
	OHL input shaft	55	**55**	55	55	**55**	55	140	**140**	140	–	**–**	–	–	**–**	–
	OHL output shaft **(B)**	711	**711**	711	711	**711**	711	711	**711**	711	–	**–**	–	–	**–**	–
10.00	Output RPM	345	**175**	116	345	**175**	116	345	**175**	116	–	**–**	–	–	**–**	–
	Input Hp (max) **(C)**	2.03	**1.03**	0.68	3.27	**1.66**	1.1	3.88	**1.97**	1.31	–	**–**	–	–	**–**	–
	Output torque, in-lb	371	**371**	371	598	**598**	598	709	**709**	709	–	**–**	–	–	**–**	–
	OHL input shaft	55	**55**	55	55	**55**	55	140	**140**	140	–	**–**	–	–	**–**	–
	OHL output shaft **(B)**	826	**826**	826	826	**826**	826	826	**826**	826	–	**–**	–	–	**–**	–
11.30	Output RPM	305	**155**	103	305	**155**	103	–	**–**	–	–	**–**	–	–	**–**	–
	Input Hp (max) **(C)**	1.83	**0.93**	0.68	2.37	**1.2**	0.08	–	**–**	–	–	**–**	–	–	**–**	–
	Output torque, in-lb	378	**378**	378	488	**488**	488	–	**–**	–	–	**–**	–	–	**–**	–
	OHL input shaft	55	**55**	55	55	**55**	55	–	**–**	–	–	**–**	–	–	**–**	–
	OHL output shaft **(B)**	826	**826**	826	826	**826**	826	–	**–**	–	–	**–**	–	–	**–**	–

Service factor: 1.0

(A) (B) (C) - See footnotes page on inside back cover

Blank areas (-) indicate configuration not available

ILH 48

Size: H_482

Double reduction – Clamp collar, three-piece coupled, separate

NEMA motor frame		56C			—			140TC			180TC			—					210TC
IEC motor frame		71D			80D			90D			100D			112D					—
Separate group		71			80			90			100			112					—
Ratio	Output Rating data	3450	1750	1160	3450	1750	1160	3450	1750	1160	3450	1750	1160	3450	1750	1160	3450	1750	1160
	Output RPM	–	–	–	806	**409**	271	806	**409**	271	806	**409**	271	806	**409**	271	806	**409**	271
	Input Hp (max) **(C)**	–	–	–	4.85	**2.46**	1.63	9.87	**5.01**	3.32	20.44	**10.37**	6.87	22.81	**13.88**	9.20	22.81	**13.88**	9.20
4.28	Output torque, in-lb	–	–	–	379	**379**	379	772	**772**	772	1598	**1598**	1598	1784	**2139**	2139	1784	**2139**	2139
	OHL input shaft	–	–	–	**(A)**	**346**	360	**(A)**	**453**	471	**(A)**	**711**	740	**(A)**	**840**	875	(A)	**840**	875
	OHL output shaft **(B)**	–	–	–	**(A)**	**896**	904	**(A)**	**896**	904	**(A)**	**896**	904	**(A)**	**896**	904	(A)	**896**	904
	Output RPM	–	–	–	670	**340**	225	670	**340**	225	670	**340**	225	670	**340**	225	670	**340**	225
	Input Hp (max) **(C)**	–	–	–	4.84	**2.46**	1.63	9.85	**5.00**	3.31	20.41	**10.35**	6.86	21.22	**12.88**	8.54	21.22	**12.88**	8.54
5.15	Output torque, in-lb	–	–	–	455	**455**	455	927	**927**	927	1920	**1920**	1920	1996	**2390**	2390	1996	**2390**	2390
	OHL input shaft	–	–	–	**(A)**	**346**	360	**(A)**	**454**	473	**(A)**	**708**	737	**(A)**	**840**	875	(A)	**840**	875
	OHL output shaft **(B)**	–	–	–	**(A)**	**904**	919	**(A)**	**904**	919	**(A)**	**904**	919	**(A)**	**904**	919	(A)	**904**	919
	Output RPM	–	–	–	569	**289**	191	569	**289**	191	569	**289**	191	569	**289**	191	569	**289**	191
	Input Hp (max) **(C)**	–	–	–	4.84	**2.46**	1.63	9.86	**5.00**	3.32	19.70	**10.36**	6.86	19.70	**10.95**	7.26	19.70	**10.95**	7.26
6.06	Output torque, in-lb	–	–	–	536	**536**	536	1092	**1092**	1092	2181	**2260**	2260	2181	**2390**	2390	2181	**2390**	2390
	OHL input shaft	–	–	–	**(A)**	**346**	360	**(A)**	**452**	471	**(A)**	**709**	739	**(A)**	**843**	877	(A)	**843**	875
	OHL output shaft **(B)**	–	–	–	**(A)**	**904**	919	**(A)**	**904**	919	**(A)**	**904**	919	**(A)**	**904**	919	(A)	**904**	919
	Output RPM	508	**258**	171	508	**258**	171	508	**258**	171	508	**258**	171	508	**258**	171	508	**258**	171
	Input Hp (max) **(C)**	4.00	**2.02**	1.34	4.84	**2.46**	1.63	9.86	**5.00**	3.32	18.29	**9.77**	6.48	18.29	**9.77**	6.48	18.29	**9.77**	6.48
6.79	Output torque, in-lb	494	**494**	494	601	**601**	601	1223	**1223**	1223	2269	**2390**	2390	2269	**2390**	2390	2269	**2390**	2390
	OHL input shaft	**(A)**	**209**	217	**(A)**	**346**	360	**(A)**	**456**	474	**(A)**	**709**	739	**(A)**	**844**	878	(A)	**844**	878
	OHL output shaft **(B)**	904	**904**	919	**(A)**	**904**	919	**(A)**	**904**	919	**(A)**	**904**	919	**(A)**	**904**	919	(A)	**904**	919
	Output RPM	–	–	–	500	**254**	168	500	**254**	168	500	**254**	168	500	**254**	168	500	**254**	168
	Input Hp (max) **(C)**	–	–	–	4.84	**2.46**	1.63	9.86	**5.00**	3.32	16.59	**10.35**	6.86	16.59	**11.05**	7.75	16.59	**11.05**	7.75
6.90	Output torque, in-lb	–	–	–	611	**611**	611	1243	**1243**	1243	2091	**2573**	2573	2091	**2747**	2907	2091	**2747**	2907
	OHL input shaft	–	–	–	**(A)**	**346**	360	**(A)**	**453**	471	**(A)**	**711**	740	**(A)**	**844**	878	(A)	**844**	878
	OHL output shaft **(B)**	–	–	–	**(A)**	**904**	919	**(A)**	**904**	919	**(A)**	**904**	919	**(A)**	**904**	919	(A)	**904**	919
	Output RPM	–	–	–	416	**211**	140	416	**211**	140	416	**211**	140	416	**211**	140	416	**211**	140
	Input Hp (max) **(C)**	–	–	–	4.84	**2.46**	1.63	9.86	**5.00**	3.31	14.70	**9.80**	6.86	14.70	**9.80**	6.87	14.70	**9.80**	6.87
8.29	Output torque, in-lb	–	–	–	734	**734**	734	1493	**1493**	1493	2226	**2925**	3091	2226	**2925**	3096	2226	**2925**	3096
	OHL input shaft	–	–	–	**(A)**	**343**	360	**(A)**	**454**	473	**(A)**	**710**	737	**(A)**	**837**	878	(A)	**837**	878
	OHL output shaft **(B)**	–	–	–	**(A)**	**919**	937	**(A)**	**919**	937	**(A)**	**919**	937	**(A)**	**919**	937	(A)	**919**	937
	Output RPM	–	–	–	353	**179**	119	353	**179**	119	353	**179**	119	353	**179**	119	353	**179**	119
	Input Hp (max) **(C)**	–	–	–	4.84	**2.46**	1.63	9.86	**5.00**	3.32	13.19	**8.79**	6.17	13.19	**8.79**	6.17	13.19	**8.79**	6.17
9.76	Output torque, in-lb	–	–	–	864	**864**	864	1758	**1758**	1758	2352	**3090**	3270	2352	**3090**	3270	2352	**3090**	3270
	OHL input shaft	–	–	–	**(A)**	**346**	360	**(A)**	**452**	471	**(A)**	**711**	739	**(A)**	**839**	871	(A)	**839**	871
	OHL output shaft **(B)**	–	–	–	904	**919**	937	904	**919**	937	904	**919**	937	904	**919**	937	904	**919**	937
	Output RPM	316	**160**	106	316	**160**	106	316	**160**	106	316	**160**	106	316	**160**	106	316	**160**	106
	Input Hp (max) **(C)**	3.98	**2.02**	1.34	4.85	**2.46**	1.63	9.87	**5.00**	3.32	12.23	**8.15**	5.72	12.23	**8.15**	5.72	12.23	**8.15**	5.72
10.93	Output torque, in-lb	795	**795**	795	968	**968**	968	1970	**1970**	1970	2442	**3208**	3396	2442	**3208**	3396	2442	**3208**	3396
	OHL input shaft	**(A)**	**209**	218	**(A)**	**346**	360	**(A)**	**456**	474	**(A)**	**712**	740	**(A)**	**840**	872	(A)	**840**	872
	OHL output shaft **(B)**	904	**919**	937	904	**919**	937	904	**919**	937	904	**919**	937	904	**919**	937	904	**919**	937
	Output RPM	282	**143**	95	282	**143**	95	282	**143**	95	282	**143**	95	282	**143**	95	282	**143**	95
	Input Hp (max) **(C)**	3.98	**2.02**	1.34	4.85	**2.46**	1.63	9.87	**5.00**	3.32	11.33	**7.55**	5.30	11.33	**7.55**	5.30	11.33	**7.55**	5.3
12.25	Output torque, in-lb	891	**891**	891	1085	**1085**	1085	2208	**2208**	2208	2535	**3331**	3525	2535	**3331**	3525	2535	**3331**	3525
	OHL input shaft	**(A)**	**209**	217	**(A)**	**346**	360	**(A)**	**456**	474	**(A)**	**712**	740	**(A)**	**837**	873	(A)	**837**	873
	OHL output shaft **(B)**	904	**937**	1142	904	**937**	1142	904	**937**	1142	904	**937**	1142	904	**937**	1142	904	**937**	1142
	Output RPM	258	**131**	87	258	**131**	87	258	**131**	87	258	**131**	87	258	**131**	87	–	–	–
	Input Hp (max) **(C)**	3.98	**2.02**	1.34	4.84	**2.46**	1.63	9.86	**5.00**	3.32	10.67	**7.11**	4.99	10.67	**7.11**	4.99	–	–	–
13.38	Output torque, in-lb	973	**973**	973	1184	**1184**	1184	2410	**2410**	2410	2609	**3427**	3627	2609	**3427**	3627	–	–	–
	OHL input shaft	(A)	**211**	219	**(A)**	**346**	360	**(A)**	**455**	474	**(A)**	**713**	741	**(A)**	**838**	870	–	–	–
	OHL output shaft **(B)**	904	**937**	1142	904	**937**	1142	904	**937**	1142	904	**937**	1142	904	**937**	1142	–	–	–
	Output RPM	235	**119**	79	235	**119**	79	235	**119**	79	235	**119**	79	235	**119**	79	–	–	–
	Input Hp (max) **(C)**	3.98	**2.02**	1.34	4.85	**2.46**	1.63	9.87	**5.00**	3.32	10.03	**6.68**	4.69	10.03	**6.68**	4.69	–	–	–
14.68	Output torque, in-lb	1068	**1068**	1068	1300	**1300**	1300	2646	**2646**	2646	2689	**3532**	3738	2689	**3532**	3738	–	–	–
	OHL input shaft	**(A)**	**210**	219	**(A)**	**346**	360	**(A)**	**454**	473	**(A)**	**713**	741	**(A)**	**839**	871	–	–	–
	OHL output shaft **(B)**	919	**937**	1142	919	**937**	1142	919	**937**	1142	919	**937**	1142	919	**937**	1142	–	–	–

Service factor: 1.0

(A) (B) (C) - See footnotes page on inside back cover

Blank areas (-) indicate configuration not available

ILH 48

Size: H_482

Double reduction – Clamp collar, three-piece coupled, separate

NEMA motor frame		56C			—			140TC			180TC			—					210TC
IEC motor frame		71D			80D			90D			100D			112D					—
Separate group		71			80			90			100			112					—
Ratio	Output Rating data	3450	1750	1160	3450	1750	1160	3450	1750	1160	3450	1750	1160	3450	1750	1160	3450	1750	1160
	Output RPM	213	**108**	72	213	**108**	72	213	**108**	72	213	**108**	72	213	**108**	72	–	–	–
	Input Hp (max) **(C)**	3.98	**2.02**	1.34	4.84	**2.46**	1.63	9.39	**5.00**	3.32	9.39	**6.26**	4.39	9.39	**6.26**	4.39	–	–	–
16.17	Output torque, in-lb	1176	**1176**	1176	1431	**1431**	1431	2774	**2913**	2913	2774	**3643**	3856	2774	**3643**	3856	–	–	–
	OHL input shaft	**(A)**	**210**	218	**(A)**	**346**	360	**(A)**	**453**	472	**(A)**	**713**	742	**(A)**	**840**	872	–	–	–
	OHL output shaft **(B)**	919	**937**	1142	919	**937**	1142	919	**937**	1142	919	**937**	1142	919	**937**	1142	–	–	–
	Output RPM	197	**100**	66	197	**100**	66	197	**100**	66	197	**100**	66	197	**100**	66	–	–	–
	Input Hp (max) **(C)**	3.98	**2.02**	1.34	4.84	**2.46**	1.63	8.88	**4.86**	3.32	8.88	**5.91**	4.15	8.88	**5.91**	4.15	–	–	–
17.55	Output torque, in-lb	1276	**1276**	1276	1553	**1553**	1553	2846	**3071**	3162	2846	**3738**	3957	2846	**3738**	3957	–	–	–
	OHL input shaft	**(A)**	**209**	218	**(A)**	**346**	360	**(A)**	**452**	470	**(A)**	**713**	742	**(A)**	**842**	875	–	–	–
	OHL output shaft **(B)**	919	**1142**	1142	919	**1142**	1142	919	**1142**	1142	919	**1142**	1142	919	**1142**	1142	–	–	–
	Output RPM	180	**91**	61	180	**91**	61	180	**91**	61	180	**91**	61	180	**91**	61	–	–	–
	Input Hp (max) **(C)**	3.87	**2.02**	1.34	4.84	**2.46**	1.63	8.37	**4.65**	3.22	8.37	**5.58**	3.83	8.37	**5.58**	3.83	–	–	–
19.13	Output torque, in-lb	1353	**1391**	1391	1693	**1693**	1693	2924	**3206**	3343	2924	**3842**	3983	2924	**3842**	3983	–	–	–
	OHL input shaft	**(A)**	**210**	218	**(A)**	**346**	359	**(A)**	**452**	472	**(A)**	**714**	742	**(A)**	**841**	874	–	–	–
	OHL output shaft **(B)**	919	**1142**	1517	919	**1142**	1517	919	**1142**	1517	919	**1142**	1517	919	**1142**	1517	–	–	–
	Output RPM	165	**84**	55	165	**84**	55	165	**84**	55	165	**84**	55	165	**84**	55	–	–	–
	Input Hp (max) **(C)**	3.61	**1.96**	1.34	4.84	**2.46**	1.63	7.87	**4.44**	3.07	7.87	**5.24**	3.50	7.87	**5.24**	3.50	–	–	–
20.95	Output torque, in-lb	1383	**1482**	1523	1854	**1854**	1854	3011	**3352**	3495	3011	**3954**	3983	3011	**3954**	3983	–	–	–
	OHL input shaft	**(A)**	**209**	217	**(A)**	**345**	359	**(A)**	**454**	472	**(A)**	**714**	743	**(A)**	**841**	875	–	–	–
	OHL output shaft **(B)**	919	**1142**	1517	919	**1142**	1517	919	**1142**	1517	919	**1142**	1517	919	**1142**	1517	–	–	–
	Output RPM	150	**76**	50	150	**76**	50	150	**76**	50	150	**76**	50	–	–	–	–	–	–
	Input Hp (max) **(C)**	3.35	**1.82**	1.25	4.85	**2.46**	1.63	7.37	**4.23**	2.92	7.37	**4.79**	3.18	–	–	–	–	–	–
23.07	Output Torque, In–Lb	1413	**1514**	1569	2042	**2042**	2042	3104	**3512**	3661	3104	**3983**	3983	–	–	–	–	–	–
	OHL input shaft	**(A)**	**209**	218	**(A)**	**345**	359	**(A)**	**454**	471	**(A)**	**714**	7y43	–	–	–	–	–	–
	OHL output shaft **(B)**	937	**1142**	1517	937	**1142**	1517	937	**1142**	1517	937	**1142**	1517	–	–	–	–	–	–
	Output RPM	130	**66**	44	130	**66**	44	130	**66**	44	130	**66**	44	–	–	–	–	–	–
	Input Hp (max) **(C)**	3.00	**1.63**	1.12	4.85	**2.46**	1.63	6.69	**3.92**	2.71	6.69	**4.17**	2.76	–	–	–	–	–	–
26.53	Output torque, in-lb	1453	**1557**	1614	2348	**2348**	2348	3241	**3749**	3910	3241	**3983**	3983	–	–	–	–	–	–
	OHL input shaft	(A)	210	217	**(A)**	**344**	358	**(A)**	**453**	471	**(A)**	**714**	743	–	–	–	–	–	–
	OHL output shaft **(B)**	937	**1142**	1517	937	**1142**	1517	937	**1142**	1517	937	**1142**	1517	–	–	–	–	–	–
	Output RPM	120	**61**	40	120	**61**	40	120	**61**	40	120	**61**	40	–	–	–	–	–	–
	Input Hp (max) **(C)**	2.81	**1.53**	1.05	4.85	**2.46**	1.63	6.33	**3.77**	2.55	6.33	**3.85**	2.55	–	–	–	–	–	–
28.74	Output torque, in-lb	1475	**1580**	1638	2544	**2544**	2544	3324	**3905**	3983	3324	**3983**	3983	–	–	–	–	–	–
	OHL input shaft	**(A)**	**210**	219	**(A)**	**343**	357	**(A)**	**453**	471	**(A)**	**714**	744	–	–	–	–	–	–
	OHL output shaft **(B)**	937	**1517**	1517	937	**1517**	1517	937	**1517**	1517	937	**1517**	1517	–	–	–	–	–	–
	Output RPM	109	**55**	37	109	**55**	37	109	**55**	37	109	**55**	37	–	–	–	–	–	–
	Input Hp (max) **(C)**	2.59	**1.40**	0.97	4.67	**2.40**	1.63	5.91	**3.48**	2.31	5.91	**3.48**	2.31	–	–	–	–	–	–
31.77	Output torque, in-lb	1500	**1607**	1666	2712	**2743**	2812	3429	**3983**	3983	3429	**3983**	3983	–	–	–	–	–	–
	OHL input shaft	**(A)**	**210**	218	**(A)**	**343**	356	**(A)**	**453**	472	**(A)**	**715**	744	–	–	–	–	–	–
	OHL output shaft **(B)**	937	**1517**	1884	937	**1517**	1884	937	**1517**	1884	937	**1517**	1884	–	–	–	–	–	–
	Output RPM	93	**47**	31	93	**47**	31	93	**47**	31	–	–	–	–	–	–	–	–	–
	Input Hp (max) **(C)**	2.27	**1.23**	0.85	4.24	**2.17**	1.53	5.31	**2.98**	1.98	–	–	–	–	–	–	–	–	–
37.06	Output torque, in-lb	1536	**1646**	1706	2868	**2902**	3076	3598	**3983**	3983	–	–	–	–	–	–	–	–	–
	OHL input shaft	**(A)**	**210**	217	**(A)**	**343**	360	**(A)**	**455**	473	–	–	–	–	–	–	–	–	–
	OHL output shaft **(B)**	1142	**1517**	1884	1142	**1517**	1884	1142	**1517**	1884	–	–	–	–	–	–	–	–	–
	Output RPM	84	**42**	28	84	**42**	28	84	**42**	28	–	–	–	–	–	–	–	–	–
	Input Hp (max) **(C)**	2.07	**1.12**	0.77	3.94	**2.02**	1.42	4.39	**2.68**	1.63	–	–	–	–	–	–	–	–	–
41.26	Output torque, in-lb	1558	**1670**	1731	2970	**3005**	3186	3312	**3983**	3659	–	–	–	–	–	–	–	–	–
	OHL input shaft	**(A)**	**210**	**(A)**	**(A)**	**343**	360	**(A)**	**455**	473	–	–	–	–	–	–	–	–	–
	OHL output shaft **(B)**	1142	**1517**	1884	1142	**1517**	1884	1142	**1517**	1884	–	–	–	–	–	–	–	–	–
	Output RPM	76	**39**	26	76	**39**	26	76	**39**	26	–	–	–	–	–	–	–	–	–
	Input Hp (max) **(C)**	1.90	**1.03**	0.71	3.19	**1.91**	1.19	3.19	**2.44**	1.19	–	–	–	–	–	–	–	–	–
45.38	Output torque, in-lb	1577	**1690**	1752	2645	**3120**	2922	2645	**3983**	2922	–	–	–	–	–	–	–	–	–
	OHL input shaft	(A)	211	**(A)**	**(A)**	**343**	360	**(A)**	**456**	474	–	–	–	–	–	–	–	–	–
	OHL output shaft **(B)**	1142	**1884**	1884	1142	**1884**	1884	1142	**1884**	1884	–	–	–	–	–	–	–	–	–
	Output RPM	67	**34**	23	67	**34**	23	–	–	–	–	–	–	–	–	–	–	–	–
	Input Hp (max) **(C)**	1.71	**0.93**	0.64	2.08	**1.87**	0.77	–	–	–	–	–	–	–	–	–	–	–	–
51.28	Output torque, in-lb	1599	**1713**	1776	1945	**3454**	2149	–	–	–	–	–	–	–	–	–	–	–	–
	OHL input shaft	**(A)**	211	**(A)**	**(A)**	346	360	–	–	–	–	–	–	–	–	–	–	–	–
	OHL output shaft **(B)**	1142	**1884**	1986	1142	**1884**	1884	–	–	–	–	–	–	–	–	–	–	–	–

ILH 48

Size: H_483

Triple reduction – Clamp collar, three-piece coupled, separate

NEMA motor frame		56C			—			140TC			180TC		
IEC motor frame		71D			80D			90D			100D		
Separate group		71			80			90			100		
Ratio	Output Rating data	3450	1750	1160	3450	1750	1160	3450	1750	1160	3450	1750	1160
	Output RPM	97	**49**	33	97	**49**	33	97	**49**	33	97	**49**	33
	Input Hp (max) **(C)**	3.98	**2.02**	1.34	4.79	**2.46**	1.63	4.79	**3.11**	2.06	4.79	**3.11**	2.06
35.59	Output torque, in-lb	2587	**2587**	2587	3114	**3150**	3150	3114	**3983**	3983	3114	**3983**	3983
	OHL input shaft	**(A)**	**209**	218	**(A)**	**346**	360	**(A)**	**457**	475	**(A)**	**715**	744
	OHL output shaft **(B)**	1142	**1517**	1884	1142	**1517**	1884	1142	**1517**	1884	1142	**1517**	1884
	Output RPM	83	**42**	28	83	**42**	28	83	**42**	28	83	**42**	28
	Input Hp (max) **(C)**	3.98	**2.02**	1.34	4.36	**2.46**	1.63	4.36	**2.67**	1.77	4.36	**2.67**	1.77
41.38	Output torque, in-lb	3009	**3009**	3009	3295	**3663**	3663	3295	**3983**	3983	3295	**3983**	3983
	OHL input shaft	(A)	211	219	**(A)**	**346**	360	**(A)**	**457**	475	**(A)**	**708**	737
	OHL output shaft **(B)**	1142	**1517**	1884	1142	**1517**	1884	1142	**1517**	1884	1142	**1517**	1884
	Output RPM	75	**38**	25	75	**38**	25	75	**38**	25	75	**38**	25
	Input Hp (max) **(C)**	3.98	**2.02**	1.34	4.08	**2.41**	1.60	4.08	**2.41**	1.60	4.08	**2.41**	1.60
45.91	Output torque, in-lb	3338	**3338**	3338	3418	**3983**	3983	3418	**3983**	3983	3418	**3983**	3983
	OHL input shaft	**(A)**	**210**	219	**(A)**	**346**	360	**(A)**	**457**	476	**(A)**	**709**	738
	OHL output shaft **(B)**	1142	**1884**	1884	1142	**1884**	1884	1142	**1884**	1884	1142	**1884**	1884
	Output RPM	69	**35**	23	69	**35**	23	69	**35**	23	–	**–**	–
	Input Hp (max) **(C)**	3.83	**2.02**	1.34	3.83	**2.21**	1.47	3.83	**2.21**	1.47	–	**–**	–
50.00	Output torque, in-lb	3497	**3635**	3635	3497	**3983**	3983	3497	**3983**	3983	–	**–**	–
	OHL input shaft	**(A)**	**210**	219	**(A)**	**346**	360	**(A)**	**457**	476	–	**–**	–
	OHL output shaft **(B)**	1142	**1884**	1986	1142	**1884**	1986	1142	**1884**	1986	–	**–**	–
	Output RPM	62	**31**	21	62	**31**	21	62	**31**	21	–	**–**	–
	Input Hp (max) **(C)**	3.53	**1.98**	1.31	3.53	**1.98**	1.31	3.53	**1.98**	1.31	–	**–**	–
55.92	Output torque, in-lb	3606	**3983**	3983	3606	**3983**	3983	3606	**3983**	3983	–	**–**	–
	OHL input shaft	**(A)**	**210**	218	**(A)**	**346**	360	**(A)**	**457**	476	–	**–**	–
	OHL output shaft **(B)**	1517	**1884**	1986	1517	**1884**	1986	1517	**1884**	1986	–	**–**	–
	Output RPM	56	**29**	19	56	**29**	19	56	**29**	19	–	**–**	–
	Input Hp (max) **(C)**	3.31	**1.81**	1.20	3.31	**1.81**	1.20	3.31	**1.81**	1.20	–	**–**	–
61.14	Output torque, in-lb	3698	**3983**	3983	3698	**3983**	3983	3698	**3983**	3983	–	**–**	–
	OHL input shaft	**(A)**	**210**	219	**(A)**	**346**	360	**(A)**	**457**	476	–	**–**	–
	OHL output shaft **(B)**	1517	**1884**	1986	1517	**1884**	1986	1517	**1884**	1986	–	**–**	–
	Output RPM	51	**26**	17	51	**26**	17	51	**26**	17	–	**–**	–
	Input Hp (max) **(C)**	3.10	**1.65**	1.09	3.10	**1.65**	1.09	3.10	**1.65**	1.09	–	**–**	–
67.10	Output torque, in-lb	3797	**3983**	3983	3797	**3983**	3983	3797	**3983**	3983	–	**–**	–
	OHL input shaft	**(A)**	**210**	219	**(A)**	**346**	360	**(A)**	**453**	471	–	**–**	–
	OHL output shaft **(B)**	1517	**1884**	1986	1517	**1884**	1986	1517	**1884**	1986	–	**–**	–
	Output RPM	47	**24**	16	47	**24**	16	47	**24**	16	–	**–**	–
	Input Hp (max) **(C)**	2.89	**1.49**	0.99	2.89	**1.49**	0.99	2.89	**1.49**	0.99	–	**–**	–
73.99	Output torque, in-lb	3905	**3983**	3983	3905	**3983**	3983	3905	**3983**	3983	–	**–**	–
	OHL input shaft	**(A)**	**211**	219	**(A)**	**346**	360	**(A)**	**453**	472	–	**–**	–
	OHL output shaft **(B)**	1517	**1986**	1986	1517	**1986**	1986	1517	**1986**	1986	–	**–**	–
	Output RPM	42	**21**	14	42	**21**	14	42	**21**	14	–	**–**	–
	Input Hp (max) **(C)**	2.66	**1.35**	0.89	2.66	**1.35**	0.89	2.66	**1.35**	0.89	–	**–**	–
82.02	Output torque, in-lb	3983	**3983**	3983	3983	**3983**	3983	3983	**3983**	3983	–	**–**	–
	OHL input shaft	**(A)**	**209**	218	**(A)**	**343**	357	**(A)**	**454**	473	–	**–**	–
	OHL output shaft **(B)**	1517	**1986**	1986	1517	**1986**	1986	1517	**1986**	1986	–	**–**	–
	Output RPM	37	**19**	12	37	**19**	12	37	**19**	12	–	**–**	–
	Input Hp (max) **(C)**	2.35	**1.19**	0.79	2.35	**1.19**	0.79	2.35	**1.19**	0.79	–	**–**	–
92.91	Output torque, in-lb	3983	**3983**	3983	3983	**3983**	3983	3983	**3983**	3983	–	**–**	–
	OHL input shaft	**(A)**	**209**	218	**(A)**	**344**	358	**(A)**	**455**	473	–	**–**	–
	OHL output shaft **(B)**	1884	**1986**	1986	1884	**1986**	1986	1884	**1986**	1986	–	**–**	–
	Output RPM	34	**17**	11	34	**17**	11	34	**17**	11	–	**–**	–
	Input Hp (max) **(C)**	2.13	**1.08**	0.72	2.13	**1.08**	0.72	2.13	**1.08**	0.72	–	**–**	–
102.52	Output torque, in-lb	3983	**3983**	3983	3983	**3983**	3983	3983	**3983**	3983	–	**–**	–
	OHL input shaft	(A)	210	218	**(A)**	**344**	358	**(A)**	**456**	474	–	**–**	–
	OHL output shaft **(B)**	1884	**1986**	1986	1884	**1986**	1986	1884	**1986**	1986	–	**–**	–

Service factor: 1.0

(A) (B) (C) - See footnotes page on inside back cover

Blank areas (-) indicate configuration not available

ILH 48

Size: H_483

Triple reduction – Clamp collar, three-piece coupled, separate

NEMA motor frame		56C			—			140TC			180TC		
IEC motor frame		71D			80D			90D			100D		
Separate group		71			80			90			100		
Ratio	**Output Rating data**	**3450**	**1750**	**1160**	**3450**	**1750**	**1160**	**3450**	**1750**	**1160**	**3450**	**1750**	**1160**
	Output RPM	30	**15**	10	30	**15**	10	30	**15**	10	–	–	–
	Input Hp (max) **(C)**	1.88	**0.95**	0.63	1.88	**0.95**	0.63	1.88	**0.95**	0.63	–	–	–
115.91	Output torque, in-lb	3983	**3983**	3983	3983	**3983**	3983	3983	**3983**	3983	–	–	–
	OHL input shaft	**(A)**	**210**	219	**(A)**	**345**	359	**(A)**	**456**	474	–	–	–
	OHL output shaft **(B)**	1884	**1986**	1986	1884	**1986**	1986	1884	**1986**	1986	–	–	–
	Output RPM	26	**13**	9	26	**13**	9	26	**13**	9	–	–	–
	Input Hp (max) **(C)**	1.65	**0.84**	0.55	1.65	**0.84**	0.55	1.65	**0.84**	0.55	–	–	–
132.34	Output torque, in-lb	3983	**3983**	3983	3983	**3983**	3983	3983	**3983**	3983	–	–	–
	OHL input shaft	**(A)**	**211**	219	**(A)**	**345**	359	**(A)**	**457**	475	–	–	–
	OHL output shaft **(B)**	1884	**1986**	1986	1884	**1986**	1986	1884	**1986**	1986	–	–	–
	Output RPM	23	**12**	8	23	**12**	8	–	–	–	–	–	–
	Input Hp (max) **(C)**	1.45	**0.73**	0.49	1.45	**0.73**	0.49	–	–	–	–	–	–
150.48	Output torque, in-lb	3983	**3983**	3983	3983	**3983**	3983	–	–	–	–	–	–
	OHL input shaft	**(A)**	**211**	219	**(A)**	**346**	360	–	–	–	–	–	–
	OHL output shaft **(B)**	1986	**1986**	1986	1986	**1986**	1986	–	–	–	–	–	–
	Output RPM	21	**11**	7	–	–	–	–	–	–	–	–	–
	Input Hp (max) **(C)**	1.35	**0.69**	0.46	–	–	–	–	–	–	–	–	–
161.05	Output torque, in-lb	3983	**3983**	3983	–	–	–	–	–	–	–	–	–
	OHL input shaft	**(A)**	**211**	219	–	–	–	–	–	–	–	–	–
	OHL output shaft **(B)**	1986	**1986**	1986	–	–	–	–	–	–	–	–	–
	Output RPM	19	**9**	6	–	–	–	–	–	–	–	–	–
	Input Hp (max) **(C)**	1.17	**0.60**	0.39	–	–	–	–	–	–	–	–	–
185.66	Output torque, in-lb	3983	**3983**	3983	–	–	–	–	–	–	–	–	–
	OHL input shaft	**(A)**	**211**	220	–	–	–	–	–	–	–	–	–
	OHL output shaft **(B)**	1986	**1986**	1986	–	–	–	–	–	–	–	–	–
	Output RPM	17	**8**	6	–	–	–	–	–	–	–	–	–
	Input Hp (max) **(C)**	1.04	**0.53**	0.35	–	–	–	–	–	–	–	–	–
208.77	Output torque, in-lb	3983	**3983**	3983	–	–	–	–	–	–	–	–	–
	OHL input shaft	**(A)**	**211**	220	–	–	–	–	–	–	–	–	–
	OHL output shaft **(B)**	1986	**1986**	1986	–	–	–	–	–	–	–	–	–

Service factor: 1.0

(A) (B) (C) - See footnotes page on inside back cover

Blank areas (-) indicate configuration not available

ILH 48

Size: H_484

Triple reduction – Clamp collar, three-piece coupled, separate

NEMA motor frame		56C			—			140TC			180TC		
IEC motor frame		71D			80D			90D			100D		
Separate group		71			80			90			100		
Ratio	**Output Rating data**	**3450**	**1750**	**1160**	**3450**	**1750**	**1160**	**3450**	**1750**	**1160**	**3450**	**1750**	**1160**
	Output RPM	16.09	**8.16**	5.41	16.09	**8.16**	5.41	16.09	**8.16**	5.41	16.09	**8.16**	5.41
	Input Hp (max) **(C)**	1.02	**0.52**	0.34	1.02	**0.52**	0.34	1.02	**0.52**	0.34	1.02	**0.52**	0.34
214.43	Output torque, in-lb	3983	**3983**	3983	3983	**3983**	3983	3983	**3983**	3983	3983	**3983**	3983
	OHL input shaft	(A)	(A)	(A)	(A)	(A)	(A)	(A)	(A)	(A)	(A)	(A)	(A)
	OHL output shaft **(B)**	1884	**1986**	1986	1884	**1986**	1986	1884	**1986**	1986	1884	**1986**	1986
	Output RPM	15.41	**7.82**	5.18	15.41	**7.82**	5.18	15.41	**7.82**	5.18	15.41	**7.82**	5.18
	Input Hp (max) **(C)**	0.97	**0.49**	0.33	0.97	**0.49**	0.33	0.97	**0.49**	0.33	0.97	**0.49**	0.33
223.91	Output torque, in-lb	3983	**3983**	3983	3983	**3983**	3983	3983	**3983**	3983	3983	**3983**	3983
	OHL input shaft	(A)	(A)	(A)	(A)	(A)	(A)	(A)	(A)	(A)	(A)	(A)	(A)
	OHL output shaft **(B)**	1517	**1986**	1986	1517	**1986**	1986	1517	**1986**	1986	1517	**1986**	1986
	Output RPM	14.42	**7.31**	4.85	14.42	**7.31**	4.85	14.42	**7.31**	4.85	14.42	**7.31**	4.85
	Input Hp (max) **(C)**	0.91	**0.46**	0.31	0.91	**0.46**	0.31	0.91	**0.46**	0.31	0.91	**0.46**	0.31
239.26	Output torque, in-lb	3983	**3983**	3983	3983	**3983**	3983	3983	**3983**	3983	3983	**3983**	3983
	OHL input shaft	(A)	(A)	(A)	(A)	(A)	(A)	(A)	(A)	(A)	(A)	(A)	(A)
	OHL output shaft **(B)**	1986	**1986**	1986	1986	**1986**	1986	1986	**1986**	1986	1986	**1986**	1986
	Output RPM	14.02	**7.11**	4.71	14.02	**7.11**	4.71	14.02	**7.11**	4.71	14.02	**7.11**	4.71
	Input Hp (max) **(C)**	0.89	**0.45**	0.30	0.89	**0.45**	0.30	0.89	**0.45**	0.30	0.89	**0.45**	0.30
246.06	Output torque, in-lb	3983	**3983**	3983	3983	**3983**	3983	3983	**3983**	3983	3983	**3983**	3983
	OHL input shaft	(A)	(A)	(A)	(A)	(A)	(A)	(A)	(A)	(A)	(A)	(A)	(A)
	OHL output shaft **(B)**	1517	**1986**	1986	1517	**1986**	1986	1517	**1986**	1986	1517	**1986**	1986
	Output RPM	13.47	**6.83**	4.53	13.47	**6.83**	4.53	13.47	**6.83**	4.53	13.47	**6.83**	4.53
	Input Hp (max) **(C)**	0.85	**0.43**	0.29	0.85	**0.43**	0.29	0.85	**0.43**	0.29	0.85	**0.43**	0.29
256.07	Output torque, in-lb	3983	**3983**	3983	3983	**3983**	3983	3983	**3983**	3983	3983	**3983**	3983
	OHL input shaft	(A)	(A)	(A)	(A)	(A)	(A)	(A)	(A)	(A)	(A)	(A)	(A)
	OHL output shaft **(B)**	1986	**1986**	1986	1986	**1986**	1986	1986	**1986**	1986	1986	**1986**	1986
	Output RPM	12.71	**6.45**	4.27	12.71	**6.45**	4.27	12.71	**6.45**	4.27	12.71	**6.45**	4.27
	Input Hp (max) **(C)**	0.80	**0.41**	0.27	0.80	**0.41**	0.27	0.80	**0.41**	0.27	0.80	**0.41**	0.27
271.49	Output torque, in-lb	3983	**3983**	3983	3983	**3983**	3983	3983	**3983**	3983	3983	**3983**	3983
	OHL input shaft	(A)	(A)	(A)	(A)	(A)	(A)	(A)	(A)	(A)	(A)	(A)	(A)
	OHL output shaft **(B)**	1517	**1986**	1986	1517	**1986**	1986	1517	**1986**	1986	1517	**1986**	1986
	Output RPM	11.91	**6.04**	4.00	11.91	**6.04**	4.00	11.91	**6.04**	4.00	11.91	**6.04**	4.00
	Input Hp (max) **(C)**	0.75	**0.38**	0.25	0.75	**0.38**	0.25	0.75	**0.38**	0.25	0.75	**0.38**	0.25
289.78	Output torque, in-lb	3983	**3983**	3983	3983	**3983**	3983	3983	**3983**	3983	3983	**3983**	3983
	OHL input shaft	(A)	(A)	(A)	(A)	(A)	(A)	(A)	(A)	(A)	(A)	(A)	(A)
	OHL output shaft **(B)**	1884	**1986**	1986	1884	**1986**	1986	1884	**1986**	1986	1884	**1986**	1986
	Output RPM	11.18	**5.67**	3.76	11.18	**5.67**	3.76	11.18	**5.67**	3.76	11.18	**5.67**	3.76
	Input Hp (max) **(C)**	0.71	**0.36**	0.24	0.71	**0.36**	0.24	0.71	**0.36**	0.24	0.71	**0.36**	0.24
308.48	Output torque, in-lb	3983	**3983**	3983	3983	**3983**	3983	3983	**3983**	3983	3983	**3983**	3983
	OHL input shaft	(A)	(A)	(A)	(A)	(A)	(A)	(A)	(A)	(A)	(A)	(A)	(A)
	OHL output shaft **(B)**	1986	**1986**	1986	1986	**1986**	1986	1986	**1986**	1986	1986	**1986**	1986
	Output RPM	10.45	**5.30**	3.51	10.45	**5.30**	3.51	10.45	**5.30**	3.51	10.45	**5.30**	3.51
	Input Hp (max) **(C)**	0.66	**0.33**	0.22	0.66	**0.33**	0.22	0.66	**0.33**	0.22	0.66	**0.33**	0.22
330.15	Output torque, in-lb	3983	**3983**	3983	3983	**3983**	3983	3983	**3983**	3983	3983	**3983**	3983
	OHL input shaft	(A)	(A)	(A)	(A)	(A)	(A)	(A)	(A)	(A)	(A)	(A)	(A)
	OHL output shaft **(B)**	1986	**1986**	1986	1986	**1986**	1986	1986	**1986**	1986	1986	**1986**	1986
	Output RPM	9.56	**4.85**	3.22	9.56	**4.85**	3.22	9.56	**4.85**	3.22	9.56	**4.85**	3.22
	Input Hp (max) **(C)**	0.60	**0.31**	0.20	0.60	**0.31**	0.20	0.60	**0.31**	0.20	0.60	**0.31**	0.20
360.75	Output torque, in-lb	3983	**3983**	3983	3983	**3983**	3983	3983	**3983**	3983	3983	**3983**	3983
	OHL input shaft	(A)	(A)	(A)	(A)	(A)	(A)	(A)	(A)	(A)	(A)	(A)	(A)
	OHL output shaft **(B)**	1986	**1986**	1986	1986	**1986**	1986	1986	**1986**	1986	1986	**1986**	1986
	Output RPM	8.40	**4.26**	2.82	8.40	**4.26**	2.82	8.40	**4.26**	2.82	8.40	**4.26**	2.82
	Input Hp (max) **(C)**	0.53	**0.27**	0.18	0.53	**0.27**	0.18	0.53	**0.27**	0.18	0.53	**0.27**	0.18
410.81	Output torque, in-lb	3983	**3983**	3983	3983	**3983**	3983	3983	**3983**	3983	3983	**3983**	3983
	OHL input shaft	(A)	(A)	(A)	(A)	(A)	(A)	(A)	(A)	(A)	(A)	(A)	(A)
	OHL output shaft **(B)**	1986	**1986**	1986	1986	**1986**	1986	1986	**1986**	1986	1986	**1986**	1986

Service factor: 1.0

(A) (B) (C) - See footnotes page on inside back cover

Blank areas (-) indicate configuration not available

ILH 48

Size: H_484

Four-stage reduction – Clamp collar, three-piece coupled, separate

NEMA motor frame		56C			—			140TC			180TC		
IEC motor frame		71D			80D			90D			100D		
Separate group		71			80			90			100		
Ratio	Output Rating data	3450	1750	1160	3450	1750	1160	3450	1750	1160	3450	1750	1160
	Output RPM	7.64	**3.88**	2.57	7.64	**3.88**	2.57	7.64	**3.88**	2.57	7.64	**3.88**	2.57
	Input Hp (max) **(C)**	0.48	**0.24**	0.16	0.48	**0.24**	0.16	0.48	**0.24**	0.16	0.48	**0.24**	0.16
451.44	Output torque, in-lb	3983	**3983**	3983	3983	**3983**	3983	3983	**3983**	3983	3983	**3983**	3983
	OHL input shaft	(A)	(A)	(A)	(A)	(A)	(A)	(A)	(A)	(A)	(A)	(A)	(A)
	OHL output shaft **(B)**	1986	**1986**	1986	1986	**1986**	1986	1986	**1986**	1986	1986	**1986**	1986
	Output RPM	7.14	**3.62**	2.40	7.14	**3.62**	2.40	7.14	**3.62**	2.40	7.14	**3.62**	2.40
	Input Hp (max) **(C)**	0.45	**0.23**	0.15	0.45	**0.23**	0.15	0.45	**0.23**	0.15	0.45	**0.23**	0.15
483.15	Output torque, in-lb	3983	**3983**	3983	3983	**3983**	3983	3983	**3983**	3983	3983	**3983**	3983
	OHL input shaft	(A)	(A)	(A)	(A)	(A)	(A)	(A)	(A)	(A)	(A)	(A)	(A)
	OHL output shaft **(B)**	1986	**1986**	1986	1986	**1986**	1986	1986	**1986**	1986	1986	**1986**	1986
	Output RPM	6.47	**3.28**	2.18	6.47	**3.28**	2.18	6.47	**3.28**	2.18	6.47	**3.28**	2.18
	Input Hp (max) **(C)**	0.41	**0.21**	0.14	0.41	**0.21**	0.14	0.41	**0.21**	0.14	0.41	**0.21**	0.14
533.08	Output torque, in-lb	3983	**3983**	3983	3983	**3983**	3983	3983	**3983**	3983	3983	**3983**	3983
	OHL input shaft	(A)	(A)	(A)	(A)	(A)	(A)	(A)	(A)	(A)	(A)	(A)	(A)
	OHL output shaft **(B)**	1986	**1986**	1986	1986	**1986**	1986	1986	**1986**	1986	1986	**1986**	1986
	Output RPM	5.69	**2.89**	1.91	5.69	**2.89**	1.91	5.69	**2.89**	1.91	5.69	**2.89**	1.91
	Input Hp (max) **(C)**	0.36	**0.18**	0.12	0.36	**0.18**	0.12	0.36	**0.18**	0.12	0.36	**0.18**	0.12
606.12	Output torque, in-lb	3983	**3983**	3983	3983	**3983**	3983	3983	**3983**	3983	3983	**3983**	3983
	OHL input shaft	(A)	(A)	(A)	(A)	(A)	(A)	(A)	(A)	(A)	(A)	(A)	(A)
	OHL output shaft **(B)**	1884	**1986**	1986	1884	**1986**	1986	1884	**1986**	1986	1884	**1986**	1986
	Output RPM	5.06	**2.57**	1.70	5.06	**2.57**	1.70	5.06	**2.57**	1.70	5.06	**2.57**	1.70
	Input Hp (max) **(C)**	0.32	**0.16**	0.11	0.32	**0.16**	0.11	0.32	**0.16**	0.11	0.32	**0.16**	0.11
681.37	Output torque, in-lb	3983	**3983**	3983	3983	**3983**	3983	3983	**3983**	3983	3983	**3983**	3983
	OHL input shaft	(A)	(A)	(A)	(A)	(A)	(A)	(A)	(A)	(A)	(A)	(A)	(A)
	OHL output shaft **(B)**	1986	**1986**	1986	1986	**1986**	1986	1986	**1986**	1986	1986	**1986**	1986
	Output RPM	5.03	**2.55**	1.69	5.03	**2.55**	1.69	5.03	**2.55**	1.69	–	–	–
	Input Hp (max) **(C)**	0.32	**0.16**	0.11	0.32	**0.16**	0.11	0.32	**0.16**	0.11	–	–	–
685.52	Output torque, in-lb	3983	**3983**	3983	3983	**3983**	3983	3983	**3983**	3983	–	–	–
	OHL input shaft	**(A)**	**(A)**	**(A)**	**(A)**	**(A)**	**(A)**	**(A)**	**(A)**	**(A)**	–	–	–
	OHL output shaft **(B)**	1884	**1986**	1986	1884	**1986**	1986	1884	**1986**	1986	–	–	–
	Output RPM	4.43	**2.25**	1.49	4.43	**2.25**	1.49	4.43	**2.25**	1.49	–	–	–
	Input Hp (max) **(C)**	0.28	**0.14**	0.09	0.28	**0.14**	0.09	0.28	**0.14**	0.09	–	–	–
779.49	Output torque, in-lb	3983	**3983**	3983	3983	**3983**	3983	3983	**3983**	3983	–	–	–
	OHL input shaft	**(A)**	**(A)**	**(A)**	**(A)**	**(A)**	**(A)**	**(A)**	**(A)**	**(A)**	–	–	–
	OHL output shaft **(B)**	1986	**1986**	1986	1986	**1986**	1986	1986	**1986**	1986	–	–	–
	Output RPM	4.14	**2.10**	1.39	4.14	**2.10**	1.39	4.14	**2.10**	1.39	–	–	–
	Input Hp (max) **(C)**	0.26	**0.13**	0.09	0.26	**0.13**	0.09	0.26	**0.13**	0.09	–	–	–
834.24	Output torque, in-lb	3983	**3983**	3983	3983	**3983**	3983	3983	**3983**	3983	–	–	–
	OHL input shaft	(A)	(A)	(A)	(A)	(A)	(A)	(A)	**(A)**	**(A)**	–	–	–
	OHL output shaft **(B)**	1986	**1986**	1986	1986	**1986**	1986	1986	**1986**	1986	–	–	–
	Output RPM	3.87	**1.96**	1.30	3.87	**1.96**	1.30	3.87	**1.96**	1.30	–	–	–
	Input Hp (max) **(C)**	0.24	**0.12**	0.08	0.24	**0.12**	0.08	0.24	**0.12**	0.08	–	–	–
890.84	Output torque, in-lb	3983	**3983**	3983	3983	**3983**	3983	3983	**3983**	3983	–	–	–
	OHL input shaft	(A)	**(A)**	**(A)**	**(A)**	**(A)**	**(A)**	**(A)**	**(A)**	**(A)**	–	–	–
	OHL output shaft **(B)**	1986	**1986**	1986	1986	**1986**	1986	1986	**1986**	1986	–	–	–
	Output RPM	3.41	**1.73**	1.15	3.41	**1.73**	1.15	3.41	**1.73**	1.15	–	–	–
	Input Hp (max) **(C)**	0.22	**0.11**	0.07	0.22	**0.11**	0.07	0.22	**0.11**	0.07	–	–	–
1012.73	Output torque, in-lb	3983	**3983**	3983	3983	**3983**	3983	3983	**3983**	3983	–	–	–
	OHL input shaft	**(A)**	**(A)**	**(A)**	**(A)**	**(A)**	**(A)**	**(A)**	**(A)**	**(A)**	–	–	–
	OHL output shaft **(B)**	1986	**1986**	1986	1986	**1986**	1986	1986	**1986**	1986	–	–	–
	Output RPM	3.19	**1.62**	1.07	3.19	**1.62**	1.07	3.19	**1.62**	1.07	–	–	–
	Input Hp (max) **(C)**	0.20	**0.10**	0.07	0.20	**0.10**	0.07	0.20	**0.10**	0.07	–	–	–
1081.43	Output torque, in-lb	3983	**3983**	3983	3983	**3983**	3983	3983	**3983**	3983	–	–	–
	OHL input shaft	(A)	**(A)**	**(A)**	**(A)**	**(A)**	**(A)**	**(A)**	**(A)**	**(A)**	–	–	–
	OHL output shaft **(B)**	1986	**1986**	1986	1986	**1986**	1986	1986	**1986**	1986	–	–	–

Service factor: 1.0

(A) (B) (C) - See footnotes page on inside back cover

Blank areas (-) indicate configuration not available

ILH 48

Size: H_484

Four-stage reduction – Clamp collar, three-piece coupled, separate

NEMA motor frame		56C			—			140TC			180TC		
IEC motor frame		71D			80D			90D			100D		
Separate group		71			80			90			100		
Ratio	**Output Rating data**	**3450**	**1750**	**1160**	**3450**	**1750**	**1160**	**3450**	**1750**	**1160**	**3450**	**1750**	**1160**
	Output RPM	2.98	**1.51**	1.00	2.98	**1.51**	1.00	2.98	**1.51**	1.00	–	–	–
	Input Hp (max) **(C)**	0.19	**0.10**	0.06	0.19	**0.10**	0.06	0.19	**0.10**	0.06	–	–	–
1159.56	Output torque, in-lb	3983	**3983**	3983	3983	**3983**	3983	3983	**3983**	3983	–	–	–
	OHL input shaft	**(A)**	**(A)**	**(A)**	**(A)**	**(A)**	**(A)**	**(A)**	**(A)**	**(A)**	–	–	–
	OHL output shaft **(B)**	1986	**1986**	1986	1986	**1986**	1986	1986	**1986**	1986	–	–	–
	Output RPM	2.79	**1.42**	0.94	2.79	**1.42**	0.94	2.79	**1.42**	0.94	–	–	–
	Input Hp (max) **(C)**	0.18	**0.09**	0.06	0.18	**0.09**	0.06	0.18	**0.09**	0.06	–	–	–
1235.92	Output torque, in-lb	3983	**3983**	3983	3983	**3983**	3983	3983	**3983**	3983	–	–	–
	OHL input shaft	(A)	(A)	(A)	(A)	(A)	(A)	(A)	(A)	(A)	–	–	–
	OHL output shaft **(B)**	1986	**1986**	1986	1986	**1986**	1986	1986	**1986**	1986	–	–	–
	Output RPM	2.58	**1.31**	0.87	2.58	**1.31**	0.87	2.58	**1.31**	0.87	–	–	–
	Input Hp (max) **(C)**	0.16	**0.08**	0.05	0.16	**0.08**	0.05	0.16	**0.08**	0.05	–	–	–
1336.75	Output torque, in-lb	3983	**3983**	3983	3983	**3983**	3983	3983	**3983**	3983	–	–	–
	OHL input shaft	(A)	(A)	(A)	**(A)**	**(A)**	**(A)**	**(A)**	**(A)**	**(A)**	–	–	–
	OHL output shaft **(B)**	1986	**1986**	1986	1986	**1986**	1986	1986	**1986**	1986	–	–	–
	Output RPM	2.46	**1.25**	0.83	2.46	**1.25**	0.83	2.46	**1.25**	0.83	–	–	–
	Input Hp (max) **(C)**	0.16	**0.08**	0.05	0.16	**0.08**	0.05	0.16	**0.08**	0.05	–	–	–
1405.02	Output torque, in-lb	3983	**3983**	3983	3983	**3983**	3983	3983	**3983**	3983	–	–	–
	OHL input shaft	**(A)**	**(A)**	**(A)**	**(A)**	**(A)**	**(A)**	**(A)**	**(A)**	**(A)**	–	–	–
	OHL output shaft **(B)**	1986	**1986**	1986	1986	**1986**	1986	1986	**1986**	1986	–	–	–
	Output RPM	2.30	**1.16**	0.77	2.30	**1.16**	0.77	2.30	**1.16**	0.77	–	–	–
	Input Hp (max) **(C)**	0.15	**0.07**	0.05	0.15	**0.07**	0.05	0.15	**0.07**	0.05	–	–	–
1503.14	Output torque, in-lb	3983	**3983**	3983	3983	**3983**	3983	3983	**3983**	3983	–	–	–
	OHL input shaft	**(A)**	**(A)**	**(A)**	**(A)**	**(A)**	**(A)**	**(A)**	**(A)**	**(A)**	–	–	–
	OHL output shaft **(B)**	1986	**1986**	1986	1986	**1986**	1986	1986	**1986**	1986	–	–	–
	Output RPM	2.24	**1.14**	0.75	2.24	**1.14**	0.75	–	–	–	–	–	–
	Input Hp (max) **(C)**	0.14	**0.07**	0.05	0.14	**0.07**	0.05	–	–	–	–	–	–
1540.98	Output torque, in-lb	3983	**3983**	3983	3983	**3983**	3983	–	–	–	–	–	–
	OHL input shaft	(A)	(A)	(A)	(A)	(A)	**(A)**	–	–	–	–	–	–
	OHL output shaft **(B)**	1986	**1986**	1986	1986	**1986**	1986	–	–	–	–	–	–
	Output RPM	1.99	**1.01**	0.67	–	–	–	–	–	–	–	–	–
	Input Hp (max) **(C)**	0.13	**0.06**	0.04	–	–	–	–	–	–	–	–	–
1732.21	Output torque, in-lb	3983	**3983**	3983	–	–	–	–	–	–	–	–	–
	OHL input shaft	**(A)**	**(A)**	**(A)**	–	–	–	–	–	–	–	–	–
	OHL output shaft **(B)**	1986	**1986**	1986	–	–	–	–	–	–	–	–	–
	Output RPM	1.77	**0.90**	0.60	–	–	–	–	–	–	–	–	–
	Input Hp (max) **(C)**	0.11	**0.06**	0.04	–	–	–	–	–	–	–	–	–
1947.82	Output torque, in-lb	3983	**3983**	3983	–	–	–	–	–	–	–	–	–
	OHL input shaft	**(A)**	**(A)**	**(A)**	–	–	–	–	–	–	–	–	–
	OHL output shaft **(B)**	1986	**1986**	1986	–	–	–	–	–	–	–	–	–

Service factor: 1.0

(A) (B) (C) - See footnotes page on inside back cover

Blank areas (-) indicate configuration not available

ILH 48

Size: H_485

Double reduction – Clamp collar, three-piece coupled, separate

NEMA motor frame		56C			—			140TC			180TC		
IEC motor frame		71D			80D			90D			100D		
Separate group		71			80			90			100		
Ratio	Output Rating data	3450	1750	1160	3450	1750	1160	3450	1750	1160	3450	1750	1160
	Output RPM	1.94	**0.98**	0.65	1.94	**0.98**	0.65	1.94	**0.98**	0.65	1.94	**0.98**	0.65
	Input Hp (max) **(C)**	0.12	**0.06**	0.04	0.12	**0.06**	0.04	0.12	**0.06**	0.04	0.12	**0.06**	0.04
1778.67	Output torque, in-lb	3983	**3983**	3983	3983	**3983**	3983	3983	**3983**	3983	3983	**3983**	3983
	OHL input shaft	(A)	(A)	(A)	(A)	(A)	(A)	(A)	(A)	(A)	(A)	(A)	(A)
	OHL output shaft **(B)**	1986	**1986**	1986	1986	**1986**	1986	1986	**1986**	1986	1986	**1986**	1986
	Output RPM	1.72	**0.87**	0.58	1.72	**0.87**	0.58	1.72	**0.87**	0.58	1.72	**0.87**	0.58
	Input Hp (max) **(C)**	0.11	**0.06**	0.04	0.11	**0.06**	0.04	0.11	**0.06**	0.04	0.11	**0.06**	0.04
2008.72	Output torque, in-lb	3983	**3983**	3983	3983	**3983**	3983	3983	**3983**	3983	3983	**3983**	3983
	OHL input shaft	(A)	(A)	(A)	(A)	(A)	(A)	(A)	(A)	(A)	(A)	(A)	(A)
	OHL output shaft **(B)**	1884	**1986**	1986	1884	**1986**	1986	1884	**1986**	1986	1884	**1986**	1986
	Output RPM	1.56	**0.79**	0.53	1.56	**0.79**	0.53	1.56	**0.79**	0.53	1.56	**0.79**	0.53
	Input Hp (max) **(C)**	0.10	**0.05**	0.03	0.10	**0.05**	0.03	0.10	**0.05**	0.03	0.10	**0.05**	0.03
2206.70	Output torque, in-lb	3983	**3983**	3983	3983	**3983**	3983	3983	**3983**	3983	3983	**3983**	3983
	OHL input shaft	(A)	(A)	(A)	(A)	(A)	(A)	(A)	(A)	(A)	(A)	(A)	(A)
	OHL output shaft **(B)**	1986	**1986**	1986	1986	**1986**	1986	1986	**1986**	1986	1986	**1986**	1986
	Output RPM	1.50	**0.76**	0.51	1.50	**0.76**	0.51	1.50	**0.76**	0.51	1.50	**0.76**	0.51
	Input Hp (max) **(C)**	0.10	**0.05**	0.03	0.10	**0.05**	0.03	0.10	**0.05**	0.03	0.10	**0.05**	0.03
2293.45	Output torque, in-lb	3983	**3983**	3983	3983	**3983**	3983	3983	**3983**	3983	3983	**3983**	3983
	OHL input shaft	(A)	(A)	(A)	(A)	(A)	(A)	(A)	(A)	(A)	(A)	(A)	(A)
	OHL output shaft **(B)**	1884	**1986**	1986	1884	**1986**	1986	1884	**1986**	1986	1884	**1986**	1986
	Output RPM	1.37	**0.70**	0.46	1.37	**0.70**	0.46	1.37	**0.70**	0.46	1.37	**0.70**	0.46
	Input Hp (max) **(C)**	0.09	**0.04**	0.03	0.09	**0.04**	0.03	0.09	**0.04**	0.03	0.09	**0.04**	0.03
2511.77	Output torque, in-lb	3983	**3983**	3983	3983	**3983**	3983	3983	**3983**	3983	3983	**3983**	3983
	OHL input shaft	(A)	(A)	(A)	(A)	(A)	(A)	(A)	(A)	(A)	(A)	(A)	(A)
	OHL output shaft **(B)**	1884	**1986**	1986	1884	**1986**	1986	1884	**1986**	1986	1884	**1986**	1986
	Output RPM	1.33	**0.67**	0.45	1.33	**0.67**	0.45	1.33	**0.67**	0.45	1.33	**0.67**	0.45
	Input Hp (max) **(C)**	0.08	**0.04**	0.03	0.08	**0.04**	0.03	0.08	**0.04**	0.03	0.08	**0.04**	0.03
2599.16	Output torque, in-lb	3983	**3983**	3983	3983	**3983**	3983	3983	**3983**	3983	3983	**3983**	3983
	OHL input shaft	(A)	(A)	(A)	(A)	(A)	(A)	(A)	(A)	(A)	(A)	(A)	(A)
	OHL output shaft **(B)**	1884	**1986**	1986	1884	**1986**	1986	1884	**1986**	1986	1884	**1986**	1986
	Output RPM	1.19	**0.60**	0.40	1.19	**0.60**	0.40	1.19	**0.60**	0.40	1.19	**0.60**	0.40
	Input Hp (max) **(C)**	0.08	**0.04**	0.03	0.08	**0.04**	0.03	0.08	**0.04**	0.03	0.08	**0.04**	0.03
2903.72	Output torque, in-lb	3983	**3983**	3983	3983	**3983**	3983	3983	**3983**	3983	3983	**3983**	3983
	OHL input shaft	(A)	(A)	(A)	(A)	(A)	(A)	(A)	(A)	(A)	(A)	(A)	(A)
	OHL output shaft **(B)**	1986	**1986**	1986	1986	**1986**	1986	1986	**1986**	1986	1986	**1986**	1986
	Output RPM	1.17	**0.59**	0.39	1.17	**0.59**	0.39	1.17	**0.59**	0.39	1.17	**0.59**	0.39
	Input Hp (max) **(C)**	0.07	**0.04**	0.02	0.07	**0.04**	0.02	0.07	**0.04**	0.02	0.07	**0.04**	0.02
2960.36	Output torque, in-lb	3983	3983	3983	3983	3983	3983	3983	3983	3983	3983	3983	3983
	OHL input shaft	(A)	(A)	(A)	(A)	(A)	(A)	(A)	(A)	(A)	(A)	(A)	(A)
	OHL output shaft **(B)**	1986	**1986**	1986	1986	**1986**	1986	1986	**1986**	1986	1986	**1986**	1986
	Output RPM	1.06	**0.54**	0.36	1.06	**0.54**	0.36	1.06	**0.54**	0.36	1.06	**0.54**	0.36
	Input Hp (max) **(C)**	0.07	**0.03**	0.02	0.07	**0.03**	0.02	0.07	**0.03**	0.02	0.07	**0.03**	0.02
3260.90	Output torque, in-lb	3983	**3983**	3983	3983	**3983**	3983	3983	**3983**	3983	3983	**3983**	3983
	OHL input shaft	(A)	(A)	(A)	(A)	(A)	(A)	(A)	(A)	(A)	(A)	(A)	(A)
	OHL output shaft **(B)**	1986	**1986**	1986	1986	**1986**	1986	1986	**1986**	1986	1986	**1986**	1986
	Output RPM	0.87	**0.44**	0.29	0.87	**0.44**	0.29	0.87	**0.44**	0.29	–	**–**	–
	Input Hp (max) **(C)**	0.06	**0.03**	0.02	0.06	**0.03**	0.02	0.06	**0.03**	0.02	–	**–**	–
3945.73	Output torque, in-lb	3983	**3983**	3983	3983	**3983**	3983	3983	**3983**	3983	–	**–**	–
	OHL input shaft	**(A)**	**(A)**	**(A)**	**(A)**	**(A)**	**(A)**	**(A)**	**(A)**	**(A)**	–	**–**	–
	OHL output shaft **(B)**	1986	**1986**	1986	1986	**1986**	1986	1986	**1986**	1986	–	**–**	–
	Output RPM	0.77	**0.39**	0.26	0.77	**0.39**	0.26	0.77	**0.39**	0.26	–	**–**	–
	Input Hp (max) **(C)**	0.05	**0.02**	0.02	0.05	**0.02**	0.02	0.05	**0.02**	0.02	–	**–**	–
4504.57	Output torque, in-lb	3983	**3983**	3983	3983	**3983**	3983	3983	**3983**	3983	–	**–**	–
	OHL input shaft	**(A)**	**(A)**	**(A)**	**(A)**	**(A)**	**(A)**	**(A)**	**(A)**	**(A)**	–	**–**	–
	OHL output shaft **(B)**	1986	**1986**	1986	1986	**1986**	1986	1986	**1986**	1986	–	**–**	–

Service factor: 1.0

(A) (B) (C) - See footnotes page on inside back cover

Blank areas (-) indicate configuration not available

ILH 48

Size: H_485

Five-stage reduction – Clamp collar, three-piece coupled, separate

NEMA motor frame		56C			—			140TC			180TC		
IEC motor frame		71D			80D			90D			100D		
Separate group		71			80			90			100		
Ratio	**Output Rating data**	**3450**	**1750**	**1160**	**3450**	**1750**	**1160**	**3450**	**1750**	**1160**	**3450**	**1750**	**1160**
	Output RPM	0.72	**0.37**	0.24	0.72	**0.37**	0.24	0.72	**0.37**	0.24	–	–	–
	Input Hp (max) **(C)**	0.05	**0.02**	0.02	0.05	**0.02**	0.02	0.05	**0.02**	0.02	–	–	–
4785.26	Output torque, in-lb	3983	**3983**	3983	3983	**3983**	3983	3983	**3983**	3983	–	–	–
	OHL input shaft	(A)	(A)	(A)	(A)	(A)	**(A)**	**(A)**	**(A)**	**(A)**	–	–	–
	OHL output shaft **(B)**	1986	**1986**	1986	1986	**1986**	1986	1986	**1986**	1986	–	–	–
	Output RPM	0.63	**0.32**	0.21	0.63	**0.32**	0.21	0.63	**0.32**	0.21	–	–	–
	Input Hp (max) **(C)**	0.04	**0.02**	0.01	0.04	**0.02**	0.01	0.04	**0.02**	0.01	–	–	–
5482.14	Output torque, in-lb	3983	**3983**	3983	3983	**3983**	3983	3983	**3983**	3983	–	–	–
	OHL input shaft	**(A)**	**(A)**	**(A)**	**(A)**	**(A)**	**(A)**	**(A)**	**(A)**	**(A)**	–	–	–
	OHL output shaft **(B)**	1986	**1986**	1986	1986	**1986**	1986	1986	**1986**	1986	–	–	–
	Output RPM	0.52	**0.26**	0.17	0.52	**0.26**	0.17	0.52	**0.26**	0.17	–	–	–
	Input Hp (max) **(C)**	0.03	**0.02**	0.01	0.03	**0.02**	0.01	0.03	**0.02**	0.01	–	–	–
6638.89	Output torque, in-lb	3983	**3983**	3983	3983	**3983**	3983	3983	**3983**	3983	–	–	–
	OHL input shaft	**(A)**	**(A)**	**(A)**	**(A)**	**(A)**	**(A)**	**(A)**	**(A)**	**(A)**	–	–	–
	OHL output shaft **(B)**	1986	**1986**	1986	1986	**1986**	1986	1986	**1986**	1986	–	–	–
	Output RPM	0.47	**0.24**	0.16	0.47	**0.24**	0.16	–	–	–	–	–	–
	Input Hp (max) **(C)**	0.03	**0.02**	0.01	0.03	**0.02**	0.01	–	–	–	–	–	–
7285.30	Output torque, in-lb	3983	**3983**	3983	3983	**3983**	3983	–	–	–	–	–	–
	OHL input shaft	**(A)**	**(A)**	**(A)**	**(A)**	**(A)**	**(A)**	–	–	–	–	–	–
	OHL output shaft **(B)**	1986	**1986**	1986	1986	**1986**	1986	–	–	–	–	–	–

Service factor: 1.0

(A) (B) (C) - See footnotes page on inside back cover

Blank areas (-) indicate configuration not available

ILH 58

Size: H_582

Double reduction – Clamp collar, three-piece coupled, separate

NEMA motor frame		56C			—			140TC			180TC			—			210TC		
ICE motor frame		71D			80D			90D			100			112D			132D		
Separate group		71			80			90			100			112			132		
Ratio	Output Rating data	3450	1750	1160	3450	1750	1160	3450	1750	1160	3450	1750	1160	3450	1750	1160	3450	1750	1160
	Output RPM	-	-	-	-	-	-	-	-	-	929	**471**	313	929	**471**	313	929	**471**	313
	Input Hp (max) **(C)**	-	-	-	-	-	-	-	-	-	20.44	**10.36**	6.86	27.38	**13.88**	9.19	47.70	**25.30**	17.20
3.71	Output torque, in-lb	-	-	-	-	-	-	-	-	-	1386	**1385**	1384	1857	**1856**	1853	3235	**3382**	3469
	OHL input shaft	-	-	-	-	-	-	-	-	-	(A)	**710**	735	(A)	**840**	875	(A)	**950**	985
	OHL output shaft **(B)**	-	-	-	-	-	-	-	-	-	(A)	**800**	850	(A)	**800**	850	(A)	**800**	850
	Output RPM	-	-	-	-	-	-	-	-	-	789	**400**	265	789	**400**	265	789	**400**	265
	Input Hp (max) **(C)**	-	-	-	-	-	-	-	-	-	20.44	**10.36**	6.86	27.38	**13.88**	9.19	40.90	**21.70**	14.70
4.38	Output torque, in-lb	-	-	-	-	-	-	-	-	-	1634	**1632**	1631	2188	**2187**	2184	3269	**3419**	3494
	OHL input shaft	-	-	-	-	-	-	-	-	-	(A)	**710**	735	(A)	**840**	875	(A)	**950**	985
	OHL output shaft **(B)**	-	-	-	-	-	-	-	-	-	(A)	**875**	975	(A)	**875**	975	(A)	**875**	975
	Output RPM	-	-	-	629	**319**	212	629	**319**	212	629	**319**	212	629	**319**	212	629	**319**	212
	Input Hp (max) **(C)**	-	-	-	4.85	**2.46**	1.63	9.87	**5.01**	3.32	20.44	**10.36**	6.86	27.38	**13.88**	9.19	33.20	**17.50**	11.90
5.48	Output torque, in-lb	-	-	-	486	**486**	486	989	**989**	989	2047	**2046**	2044	2742	**2741**	2738	3325	**3456**	3545
	OHL input shaft	-	-	-	(A)	**345**	360	(A)	**455**	470	(A)	**710**	735	(A)	**840**	875	(A)	**950**	985
	OHL output shaft **(B)**	-	-	-	(A)	**875**	1150	(A)	**875**	1150	(A)	**875**	1150	(A)	**875**	1150	(A)	**875**	1150
	Output RPM	-	-	-	555	**282**	187	555	**282**	187	555	**282**	187	555	**282**	187	555	**282**	187
	Input Hp (max) **(C)**	-	-	-	4.85	**2.46**	1.63	9.87	**5.01**	3.32	20.44	**10.36**	6.86	27.38	**13.88**	9.19	29.50	**15.60**	10.50
6.21	Output torque, in-lb	-	-	-	551	**551**	550	1120	**1121**	1121	2320	**2318**	2316	3108	**3106**	3103	3349	**3491**	3545
	OHL input shaft	-	-	-	(A)	**345**	360	(A)	**455**	470	(A)	**710**	735	(A)	**840**	875	(A)	**950**	985
	OHL output shaft **(B)**	-	-	-	(A)	**925**	1250	(A)	**925**	1250	(A)	**925**	1250	(A)	**925**	1250	(A)	**925**	1250
	Output RPM	-	-	-	-	-	-	-	-	-	488	**247**	164	488	**247**	164	488	**247**	164
	Input Hp (max) **(C)**	-	-	-	-	-	-	-	-	-	20.44	**10.36**	6.86	27.38	**13.88**	9.19	34.60	**18.60**	12.70
7.07	Output torque, in-lb	-	-	-	-	-	-	-	-	-	2640	**2638**	2635	3537	**3535**	3531	4469	**4737**	4879
	OHL input shaft	-	-	-	-	-	-	-	-	-	(A)	**710**	735	(A)	**840**	875	(A)	**950**	985
	OHL output shaft **(B)**	-	-	-	-	-	-	-	-	-	(A)	**750**	1075	(A)	**750**	1075	(A)	**750**	1075
	Output RPM	-	-	-	389	**197**	131	389	**197**	131	389	**197**	131	389	**197**	131	389	**197**	131
	Input Hp (max) **(C)**	-	-	-	4.85	**2.46**	1.63	9.87	**5.01**	3.32	20.44	**10.36**	6.86	27.38	**13.88**	9.19	28.20	**15.10**	10.30
8.86	Output torque, in-lb	-	-	-	785	**785**	785	1598	**1599**	1599	3309	**3307**	3303	4433	**4430**	4425	4566	**4820**	4960
	OHL input shaft	-	-	-	(A)	**345**	360	(A)	**455**	470	(A)	**710**	735	(A)	**840**	875	(A)	**950**	985
	OHL output shaft **(B)**	-	-	-	(A)	**925**	1300	(A)	**925**	1300	(A)	**925**	1300	(A)	**925**	1300	(A)	**925**	1300
	Output RPM	-	-	-	344	**174**	116	344	**174**	116	344	**174**	116	344	**174**	116	344	**174**	116
	Input Hp (max) **(C)**	-	-	-	4.85	**2.46**	1.63	9.87	**5.01**	3.32	20.44	**10.36**	6.86	25.10	**13.50**	9.19	25.10	**13.50**	9.20
10.04	Output torque, in-lb	-	-	-	890	**890**	889	1811	**1812**	1812	3750	**3747**	3743	4605	**4883**	5014	4605	**4883**	5020
	OHL input shaft	-	-	-	(A)	**345**	360	(A)	**455**	470	(A)	**710**	735	(A)	**840**	875	(A)	**950**	985
	OHL output shaft **(B)**	-	-	-	(A)	**1025**	1400	(A)	**1025**	1400	(A)	**1025**	1400	(A)	**1025**	1400	(A)	**1025**	1400
	Output RPM	-	-	-	281	**143**	95	281	**143**	95	281	**143**	95	281	**143**	95	281	**143**	95
	Input Hp (max) **(C)**	-	-	-	4.85	**2.46**	1.63	9.87	**5.01**	3.32	20.44	**10.36**	6.86	20.90	**11.20**	7.60	20.90	**11.20**	7.60
12.26	Output torque, in-lb	-	-	-	1086	**1086**	1085	2210	**2212**	2211	4577	**4573**	4568	4680	**4944**	5061	4680	**4944**	5061
	OHL input shaft	-	-	-	(A)	**345**	360	(A)	**455**	470	(A)	**710**	735	(A)	**840**	875	(A)	**950**	985
	OHL output shaft **(B)**	-	-	-	(A)	**1200**	1600	(A)	**1200**	1600	(A)	**1200**	1600	(A)	**1200**	1600	(A)	**1200**	1600
	Output RPM	260	**132**	87	260	**132**	87	260	**132**	87	260	**132**	87	260	**132**	87	260	**132**	87
	Input Hp (max) **(C)**	3.98	**2.02**	1.34	4.85	**2.46**	1.63	9.87	**5.01**	3.32	19.40	**10.36**	6.86	19.40	**10.40**	7.10	19.40	**10.40**	7.10
13.29	Output torque, in-lb	966	**967**	967	1177	**1177**	1177	2396	**2397**	2397	4709	**4957**	4952	4709	**4976**	5125	4709	**4976**	5125
	OHL input shaft	(A)	**215**	225	(A)	**345**	360	(A)	**455**	470	(A)	**710**	735	(A)	**840**	875	(A)	**950**	985
	OHL output shaft **(B)**	(A)	**1275**	1700	(A)	**1275**	1700	(A)	**1275**	1700	(A)	**1275**	1700	(A)	**1275**	1700	(A)	**1275**	1700
	Output RPM	229	**116**	77	229	**116**	77	229	**116**	77	229	**116**	77	229	**116**	77	229	**116**	77
	Input Hp (max) **(C)**	3.98	**2.02**	1.34	4.85	**2.46**	1.63	9.87	**5.01**	3.32	17.30	**9.20**	6.30	17.30	**9.20**	6.30	17.30	**9.20**	6.30
15.09	Output torque, in-lb	1097	**1097**	1098	1337	**1337**	1336	2720	**2722**	2721	4768	**4998**	5164	4768	**4998**	5164	4768	**4998**	5164
	OHL input shaft	(A)	**215**	225	(A)	**345**	360	(A)	**455**	470	(A)	**710**	735	(A)	**840**	875	(A)	**950**	985
	OHL output shaft **(B)**	(A)	**1400**	1800	(A)	**1400**	1800	(A)	**1400**	1800	(A)	**1400**	1800	(A)	**1400**	1800	(A)	**1400**	1800
	Output RPM	214	**109**	72	214	**109**	72	214	**109**	72	214	**109**	72	214	**109**	72	214	**109**	72
	Input Hp (max) **(C)**	3.98	**2.02**	1.34	4.85	**2.46**	1.63	9.87	**5.01**	3.32	16.30	**8.70**	5.90	16.30	**8.70**	5.90	16.30	**8.70**	5.90
16.13	Output torque, in-lb	1173	**1173**	1174	1429	**1429**	1428	2908	**2910**	2909	4802	**5053**	5170	4802	**5053**	5170	4802	**5053**	5170
	OHL input shaft	(A)	**215**	225	(A)	**345**	360	(A)	**455**	470	(A)	**710**	735	(A)	**840**	875	(A)	**950**	985
	OHL output shaft **(B)**	(A)	**1450**	1900	(A)	**1450**	1900	(A)	**1450**	1900	(A)	**1450**	1900	(A)	**1450**	1900	(A)	**1450**	1900
	Output RPM	188	**96**	63	188	**96**	63	188	**96**	63	188	**96**	63	188	**96**	63	188	**96**	63
	Input Hp (max) **(C)**	3.98	**2.02**	1.34	4.85	**2.46**	1.63	9.87	**5.01**	3.32	14.50	**7.70**	5.30	14.50	**7.70**	5.30	14.50	**7.70**	5.30
18.30	Output torque, in-lb	1331	**1332**	1333	1622	**1622**	1621	3300	**3302**	3301	4848	**5076**	5270	4848	**5076**	5270	4848	**5076**	5270
	OHL input shaft	(A)	**215**	225	(A)	**345**	360	(A)	**455**	470	(A)	**710**	735	(A)	**840**	875	(A)	**950**	985
	OHL output shaft **(B)**	(A)	**1600**	2050	(A)	**1600**	2050	(A)	**1600**	2050	(A)	**1600**	2050	(A)	**1600**	2050	(A)	**1600**	2050

ILH 58

Size: H_582

Double reduction – Clamp collar, three-piece coupled, separate

NEMA motor frame		56C			—			140TC			180TC			—			210TC		
ICE motor frame		71D			80D			90D			100			112D			132D		
Separate group		71			80			90			100			112			132		
Ratio	Output Rating data	3450	1750	1160	3450	1750	1160	3450	1750	1160	3450	1750	1160	3450	1750	1160	3450	1750	1160
	Output RPM	175	**89**	59	175	**89**	59	175	**89**	59	175	**89**	59	175	**89**	59	175	**89**	59
	Input Hp (max) **(C)**	3.98	**2.02**	1.34	4.85	**2.46**	1.63	9.87	**5.01**	3.32	13.50	**7.20**	4.90	13.50	**7.20**	4.90	13.50	**7.20**	4.90
19.74	Output torque, in-lb	1435	**1436**	1437	1749	**1749**	1748	3559	**3562**	3561	4868	**5119**	5255	4868	**5119**	5255	4868	**5119**	5255
	OHL input shaft	(A)	**215**	225	(A)	**345**	360	(A)	**455**	470	(A)	**710**	735	(A)	**840**	875	(A)	**950**	985
	OHL output shaft **(B)**	(A)	**1650**	2150	(A)	**1650**	2150	(A)	**1650**	2150	(A)	**1650**	2150	(A)	**1650**	2150	(A)	**1650**	2150
	Output RPM	161	**82**	54	161	**82**	54	161	**82**	54	161	**82**	54	161	**82**	54	161	**82**	54
	Input Hp (max) **(C)**	3.98	**2.02**	1.34	4.85	**2.46**	1.63	9.87	**5.01**	3.32	12.50	**6.70**	4.50	12.50	**6.70**	4.50	12.50	**6.70**	4.50
21.37	Output torque, in-lb	1554	**1555**	1556	1893	**1893**	1893	3853	**3856**	3855	4880	**5157**	5225	4880	**5157**	5225	4880	**5157**	5225
	OHL input shaft	(A)	**215**	225	(A)	**345**	360	(A)	**455**	470	(A)	**710**	735	(A)	**840**	875	(A)	**950**	985
	OHL output shaft **(B)**	(A)	**1750**	2200	(A)	**1750**	2200	(A)	**1750**	2200	(A)	**1750**	2200	(A)	**1750**	2200	(A)	**1750**	2200
	Output RPM	148	**75**	50	148	**75**	50	148	**75**	50	148	**75**	50	148	**75**	50	148	**75**	50
	Input Hp (max) **(C)**	3.98	**2.02**	1.34	4.85	**2.46**	1.63	9.87	**5.01**	3.32	11.60	**6.20**	4.20	11.60	**6.20**	4.20	11.60	**6.20**	4.20
23.24	Output torque, in-lb	1689	**1690**	1692	2059	**2058**	2058	4189	**4192**	4191	4924	**5188**	5302	4924	**5188**	5302	4924	**5188**	5302
	OHL input shaft	(A)	**215**	225	(A)	**345**	360	(A)	**455**	470	(A)	**710**	735	(A)	**840**	875	(A)	**950**	985
	OHL output shaft **(B)**	(A)	**1850**	2200	(A)	**1850**	2200	(A)	**1850**	2200	(A)	**1850**	2200	(A)	**1850**	2200	(A)	**1850**	2200
	Output RPM	134	**68**	45	134	**68**	45	134	**68**	45	134	**68**	45	134	**68**	45	134	**68**	45
	Input Hp (max) **(C)**	3.98	**2.02**	1.34	4.85	**2.46**	1.63	9.87	**5.01**	3.32	10.60	**5.60**	3.80	10.60	**5.60**	3.80	10.60	**5.60**	3.80
25.75	Output torque, in-lb	1872	**1873**	1874	2281	**2281**	2280	4642	**4645**	4644	4986	**5193**	5316	4986	**5193**	5316	4986	**5193**	5316
	OHL input shaft	(A)	**215**	225	(A)	**345**	360	(A)	**455**	470	(A)	**710**	735	(A)	**840**	875	(A)	**950**	985
	OHL output shaft **(B)**	(A)	**1950**	2200	(A)	**1950**	2200	(A)	**1950**	2200	(A)	**1950**	2200	(A)	**1950**	2200	(A)	**1950**	2200
	Output RPM	122	**62**	41	122	**62**	41	122	**62**	41	122	**62**	41	122	**62**	41	122	**62**	41
	Input Hp (max) **(C)**	3.98	**2.02**	1.34	4.85	**2.46**	1.63	9.70	**5.01**	3.32	9.70	**5.10**	3.50	9.70	**5.10**	3.50	9.70	**5.10**	3.50
28.29	Output torque, in-lb	2057	**2058**	2059	2506	**2506**	2505	5012	**5104**	5102	5012	**5195**	5379	5012	**5195**	5379	5012	**5195**	5379
	OHL input shaft	(A)	**215**	225	(A)	**345**	360	(A)	**455**	470	(A)	**710**	735	(A)	**840**	875	(A)	**950**	985
	OHL output shaft **(B)**	(A)	**2100**	2200	(A)	**2100**	2200	(A)	**2100**	2200	(A)	**2100**	2200	(A)	**2100**	2200	(A)	**2100**	2200
	Output RPM	109	**55**	37	109	**55**	37	109	**55**	37	109	**55**	37	109	**55**	37	-	-	-
	Input Hp (max) **(C)**	3.98	**2.02**	1.34	4.85	**2.46**	1.63	8.70	**4.60**	3.15	8.70	**4.60**	3.15	8.70	**4.60**	3.15	-	-	-
31.55	Output torque, in-lb	2294	**2295**	2297	2795	**2795**	2794	5014	**5227**	5400	5014	**5227**	5400	5014	**5227**	5400	-	-	-
	OHL input shaft	(A)	**215**	225	(A)	**345**	360	(A)	**455**	470	(A)	**710**	735	(A)	**840**	875	-	-	-
	OHL output shaft **(B)**	(A)	**2200**	2200	(A)	**2200**	2200	(A)	**2200**	2200	(A)	**2200**	2200	(A)	**2200**	2200	-	-	-
	Output RPM	100	**51**	34	100	**51**	34	100	**51**	34	100	**51**	34	100	**51**	34	-	-	-
	Input Hp (max) **(C)**	3.98	**2.02**	1.34	4.85	**2.46**	1.63	8.00	**4.30**	2.87	8.00	**4.30**	2.87	8.00	**4.30**	2.87	-	-	-
34.57	Output torque, in-lb	2514	**2515**	2517	3063	**3063**	3062	5052	**5354**	5400	5052	**5354**	5400	5052	**5354**	5400	-	-	-
	OHL input shaft	(A)	**215**	225	(A)	**345**	360	(A)	**455**	470	(A)	**710**	735	(A)	**840**	875	-	-	-
	OHL output shaft **(B)**	(A)	**2200**	2200	(A)	**2200**	2200	(A)	**2200**	2200	(A)	**2200**	2200	(A)	**2200**	2200	-	-	-
	Output RPM	90	**46**	30	90	**46**	30	90	**46**	30	90	**46**	30	-	-	-	-	-	-
	Input Hp (max) **(C)**	3.98	**2.02**	1.34	4.85	**2.46**	1.63	7.30	**3.90**	2.60	7.30	**3.90**	2.60	-	-	-	-	-	-
38.14	Output torque, in-lb	2773	**2775**	2777	3379	**3379**	3378	5087	**5357**	5388	5087	**5357**	5388	-	-	-	-	-	-
	OHL input shaft	(A)	**215**	225	(A)	**345**	360	(A)	**455**	470	(A)	**710**	735	-	-	-	-	-	-
	OHL output shaft **(B)**	(A)	**2200**	2200	(A)	**2200**	2200	(A)	**2200**	2200	(A)	**2200**	2200	-	-	-	-	-	-
	Output RPM	79	**40**	27	79	**40**	27	79	**40**	27	-	-	-	-	-	-	-	-	-
	Input Hp (max) **(C)**	3.98	**2.02**	1.34	4.85	**2.46**	1.63	6.50	**3.40**	2.28	-	-	-	-	-	-	-	-	-
43.61	Output torque, in-lb	3170	**3172**	3175	3864	**3863**	3862	5178	**5340**	5400	-	-	-	-	-	-	-	-	-
	OHL input shaft	(A)	**215**	225	(A)	**345**	360	(A)	**455**	470	-	-	-	-	-	-	-	-	-
	OHL output shaft **(B)**	(A)	**2200**	2200	(A)	**2200**	2200	(A)	**2200**	2200	-	-	-	-	-	-	-	-	-
	Output RPM	70	**36**	24	70	**36**	24	70	**36**	24	-	-	-	-	-	-	-	-	-
	Input Hp (max) **(C)**	3.98	**2.02**	1.34	4.85	**2.46**	1.63	5.80	**3.04**	2.02	-	-	-	-	-	-	-	-	-
49.29	Output torque, in-lb	3583	**3585**	3588	4367	**4366**	4365	5222	**5400**	5400	-	-	-	-	-	-	-	-	-
	OHL input shaft	(A)	**215**	225	(A)	**345**	360	(A)	**455**	470	-	-	-	-	-	-	-	-	-
	OHL output shaft **(B)**	(A)	**2200**	2200	(A)	**2200**	2200	(A)	**2200**	2200	-	-	-	-	-	-	-	-	-
	Output RPM	63	**32**	21	63	**32**	21	63	**32**	21	-	-	-	-	-	-	-	-	-
	Input Hp (max) **(C)**	3.98	**2.02**	1.34	4.85	**2.46**	1.63	5.20	**2.74**	1.82	-	-	-	-	-	-	-	-	-
54.69	Output torque, in-lb	3976	**3978**	3981	4845	**4845**	4843	5195	**5400**	5400	-	-	-	-	-	-	-	-	-
		(A)	**215**	225	(A)	**345**	360	(A)	**455**	470	-	-	-	-	-	-	-	-	-
	OHL output shaft **(B)**	(A)	**2200**	2200	(A)	**2200**	2200	(A)	**2200**	2200	-	-	-	-	-	-	-	-	-

Service factor: 1.0

(A) (B) (C) - See footnotes page on inside back cover

Blank areas (-) indicate configuration not available

ILH 58

Size: H_583

Single reduction – Clamp collar, three-piece coupled, separate

NEMA motor frame		56C			—			140TC			180TC		
ICE motor frame		71D			80D			90D			100D		
Separate group		71			80			90			100		
Ratio	Output Rating data	3450	1750	1160	3450	1750	1160	3450	1750	1160	3450	1750	1160
	Output RPM	-	-	-	101	**51**	34	101	**51**	34	101	**51**	34
	Input HP	-	-	-	4.85	**2.46**	1.63	8.10	**4.29**	2.90	8.10	**4.29**	2.90
34.27	Output Torque, In-Lb	-	-	-	3036	**3036**	3035	5071	**5298**	5400	5071	**5298**	5400
	OHL Input Shaft	-	-	-	**(A)**	**345**	360	**(A)**	**455**	470	**(A)**	**710**	735
	OHL Output Shaft	-	-	-	**1550**	**2200**	2200	**1550**	**2200**	2200	**1550**	**2200**	2200
	Output RPM	80	**41**	27	80	**41**	27	80	**41**	27	80	**41**	27
	Input HP	3.98	**2.02**	1.34	4.85	**2.46**	1.63	6.60	**3.47**	2.31	6.60	**3.47**	2.31
42.99	Output Torque, In-Lb	3126	**3128**	3130	3809	**3809**	3808	5184	**5374**	5400	5184	**5374**	5400
	OHL Input Shaft	**(A)**	**215**	225	**(A)**	**345**	360	**(A)**	**455**	470	**(A)**	**710**	735
	OHL Output Shaft	**1800**	**2200**	2200	**1800**	**2200**	2200	**1800**	**2200**	2200	**1800**	**2200**	2200
	Output RPM	72	**37**	24	72	**37**	24	72	**37**	24	72	**37**	24
	Input HP	3.98	**2.02**	1.34	4.85	**2.46**	1.63	5.90	**3.14**	2.08	5.90	**3.14**	2.08
47.77	Output Torque, In-Lb	3473	**3475**	3478	4232	**4232**	4231	5149	**5400**	5400	5149	**5400**	5400
	OHL Input Shaft	**(A)**	**215**	225	**(A)**	**345**	360	**(A)**	**455**	470	**(A)**	**710**	735
	OHL Output Shaft	**1950**	**2200**	2200	**1950**	**2200**	2200	**1950**	**2200**	2200	**1950**	**2200**	2200
	Output RPM	63	**32**	21	63	**32**	21	63	**32**	21	63	**32**	21
	Input HP	3.98	**2.02**	1.34	4.85	**2.46**	1.63	5.20	**2.73**	1.81	5.20	**2.73**	1.81
54.94	Output Torque, In-Lb	3994	**3997**	4000	4867	**4867**	4865	5219	**5400**	5400	5219	**5400**	5400
	OHL Input Shaft	**(A)**	**215**	225	**(A)**	**345**	360	**(A)**	**455**	470	**(A)**	**710**	735
	OHL Output Shaft	**2100**	**2200**	2200	**2100**	**2200**	2200	**2100**	**2200**	2200	**2100**	**2200**	2200
	Output RPM	58	**30**	20	58	**30**	20	58	**30**	20	58	**30**	20
	Input HP	3.98	**2.02**	1.34	4.85	**2.46**	1.63	4.90	**2.54**	1.68	4.90	**2.54**	1.68
59.09	Output Torque, In-Lb	4296	**4298**	4302	5235	**5235**	5233	5289	**5400**	5400	5289	**5400**	5400
	OHL Input Shaft	**(A)**	**215**	225	**(A)**	**345**	360	**(A)**	**455**	470	**(A)**	**710**	735
	OHL Output Shaft	**2200**	**2200**	2200	**2200**	**2200**	2200	**2200**	**2200**	2200	**2200**	**2200**	2200
	Output RPM	50	**25**	17	50	**25**	17	50	**25**	17	50	**25**	17
	Input HP	3.98	**2.02**	1.34	4.20	**2.18**	1.44	4.20	**2.18**	1.44	4.20	**2.18**	1.44
68.85	Output Torque, In-Lb	5006	**5008**	5012	5282	**5400**	5400	5282	**5400**	5400	5282	**5400**	5400
	OHL Input Shaft	**(A)**	**215**	225	**(A)**	**345**	360	**(A)**	**455**	470	**(A)**	**710**	735
	OHL Output Shaft	**2200**	**2200**	2200	**2200**	**2200**	2200	**2200**	**2200**	2200	**2200**	**2200**	2200
	Output RPM	46	**23**	16	46	**23**	16	46	**23**	16	46	**23**	16
	Input HP	3.90	**2.01**	1.33	3.90	**2.01**	1.33	3.90	**2.01**	1.33	3.90	**2.01**	1.33
74.64	Output Torque, In-Lb	5318	**5400**	5400	5318	**5400**	5400	5318	**5400**	5400	5318	**5400**	5400
	OHL Input Shaft	**(A)**	**215**	225	**(A)**	**345**	360	**(A)**	**455**	470	**(A)**	**710**	735
	OHL Output Shaft	2200	**2200**	2200	2200	**2200**	2200	2200	**2200**	2200	2200	**2200**	2200
	Output RPM	42	**22**	14	42	**22**	14	42	**22**	14	42	**22**	14
	Input HP	3.60	**1.85**	1.22	3.60	**1.85**	1.22	3.60	**1.85**	1.22	3.60	**1.85**	1.22
81.21	Output Torque, In-Lb	5341	**5400**	5400	5341	**5400**	5400	5341	**5400**	5400	5341	**5400**	5400
	OHL Input Shaft	**(A)**	**215**	225	**(A)**	**345**	360	**(A)**	**455**	470	**(A)**	**710**	735
	OHL Output Shaft	2200	**2200**	2200	2200	**2200**	2200	2200	**2200**	2200	2200	**2200**	2200
	Output RPM	39	**20**	13	39	**20**	13	39	**20**	13	39	**20**	13
	Input HP	3.30	**1.69**	1.12	3.30	**1.69**	1.12	3.30	**1.69**	1.12	3.30	**1.69**	1.12
88.72	Output Torque, In-Lb	5348	**5400**	5400	5348	**5400**	5400	5348	**5400**	5400	5348	**5400**	5400
	OHL Input Shaft	**(A)**	**215**	225	**(A)**	**345**	360	**(A)**	**455**	470	**(A)**	**710**	735
	OHL Output Shaft	2200	**2200**	2200	2200	**2200**	2200	2200	**2200**	2200	2200	**2200**	2200
	Output RPM	35	**18**	12	35	**18**	12	35	**18**	12	35	**18**	12
	Input HP	3.00	**1.54**	1.02	3.00	**1.54**	1.02	3.00	**1.54**	1.02	3.00	**1.54**	1.02
97.38	Output Torque, In-Lb	5337	**5400**	5400	5337	**5400**	5400	5337	**5400**	5400	5337	**5400**	5400
	OHL Input Shaft	**(A)**	**215**	225	**(A)**	**345**	360	**(A)**	**455**	470	**(A)**	**710**	735
	OHL Output Shaft	2200	**2200**	2200	2200	**2200**	2200	2200	**2200**	2200	2200	**2200**	2200

Service factor: 1.0

(A) (B) (C) - See footnotes page on inside back cover

Blank areas (-) indicate configuration not available

ILH 58

Size: H_583

Single reduction – Clamp collar, three-piece coupled, separate

NEMA motor frame		56C			—			140TC			180TC		
ICE motor frame		71D			80D			90D			100D		
Separate group		71			80			90			100		
Ratio	Output Rating data	3450	1750	1160	3450	1750	1160	3450	1750	1160	3450	1750	1160
	Output RPM	32	**16**	11	32	**16**	11	32	**16**	11	32	**16**	11
	Input HP	2.75	**1.39**	0.92	2.75	**1.39**	0.92	2.75	**1.39**	0.92	2.75	**1.39**	0.92
107.49	Output Torque, In-Lb	5400	**5400**	5400	5400	**5400**	5400	5400	**5400**	5400	5400	**5400**	5400
	OHL Input Shaft	**(A)**	**215**	225	**(A)**	**345**	360	**(A)**	**455**	470	**(A)**	**710**	735
	OHL Output Shaft	2200	**2200**	2200	2200	**2200**	2200	2200	**2200**	2200	2200	**2200**	2200
	Output RPM	28	**14**	10	28	**14**	10	28	**14**	10	28	**14**	10
	Input HP	2.44	**1.24**	0.82	2.44	**1.24**	0.82	2.44	**1.24**	0.82	2.44	**1.24**	0.82
121.27	Output Torque, In-Lb	5400	**5400**	5400	5400	**5400**	5400	5400	**5400**	5400	5400	**5400**	5400
	OHL Input Shaft	**(A)**	**215**	225	**(A)**	**345**	360	**(A)**	**455**	470	**(A)**	**710**	735
	OHL Output Shaft	2200	**2200**	2200	2200	**2200**	2200	2200	**2200**	2200	2200	**2200**	2200
	Output RPM	26	**13**	9	26	**13**	9	26	**13**	9	26	**13**	9
	Input HP	2.22	**1.12**	0.75	2.22	**1.12**	0.75	2.22	**1.12**	0.75	2.22	**1.12**	0.75
133.36	Output Torque, In-Lb	5400	**5400**	5400	5400	**5400**	5400	5400	**5400**	5400	5400	**5400**	5400
	OHL Input Shaft	**(A)**	**215**	225	**(A)**	**345**	360	**(A)**	**455**	470	**(A)**	**710**	735
	OHL Output Shaft	2200	**2200**	2200	2200	**2200**	2200	2200	**2200**	2200	2200	**2200**	2200
	Output RPM	23	**12**	8	23	**12**	8	23	**12**	8	23	**12**	8
	Input HP	2.00	**1.02**	0.67	2.00	**1.02**	0.67	2.00	**1.02**	0.67	2.00	**1.02**	0.67
147.66	Output Torque, In-Lb	5400	**5400**	5400	5400	**5400**	5400	5400	**5400**	5400	5400	**5400**	5400
	OHL Input Shaft	**(A)**	**215**	225	**(A)**	**345**	360	**(A)**	**455**	470	**(A)**	**710**	735
	OHL Output Shaft	2200	**2200**	2200	2200	**2200**	2200	2200	**2200**	2200	2200	**2200**	2200
	Output RPM	20	**10**	7	20	**10**	7	20	**10**	7	-	**-**	-
	Input HP	1.71	**0.87**	0.57	1.71	**0.87**	0.57	1.71	**0.87**	0.57	-	**-**	-
173.17	Output Torque, In-Lb	5400	**5400**	5400	5400	**5400**	5400	5400	**5400**	5400	-	**-**	-
	OHL Input Shaft	**(A)**	**215**	225	**(A)**	**345**	360	**(A)**	**455**	470	-	**-**	-
	OHL Output Shaft	2200	**2200**	2200	2200	**2200**	2200	2200	**2200**	2200	-	**-**	-
	Output RPM	18	**9**	6	18	**9**	6	18	**9**	6	-	**-**	-
	Input HP	1.55	**0.78**	0.52	1.55	**0.78**	0.52	1.55	**0.78**	0.52	-	**-**	-
191.09	Output Torque, In-Lb	5400	**5400**	5400	5400	**5400**	5400	5400	**5400**	5400	-	**-**	-
	OHL Input Shaft	**(A)**	**215**	225	**(A)**	**345**	360	**(A)**	**455**	470	-	**-**	-
	OHL Output Shaft	2200	**2200**	2200	2200	**2200**	2200	2200	**2200**	2200	-	**-**	-
	Output RPM	16	**8**	5	16	**8**	5	16	**8**	5	-	**-**	-
	Input HP	1.39	**0.71**	0.47	1.39	**0.71**	0.47	1.39	**0.71**	0.47	-	**-**	-
212.58	Output Torque, In-Lb	5400	**5400**	5400	5400	**5400**	5400	5400	**5400**	5400	-	**-**	-
	OHL Input Shaft	**(A)**	**215**	225	**(A)**	**345**	360	(A)	**455**	470	-	**-**	-
	OHL Output Shaft	2200	**2200**	2200	2200	**2200**	2200	2200	**2200**	2200	-	**-**	-
	Output RPM	14	**7**	5	14	**7**	5	-	**-**	-	-	**-**	-
	Input HP	1.24	**0.63**	0.42	1.24	**0.63**	0.42	-	**-**	-	-	**-**	-
238.86	Output Torque, In-Lb	5400	**5400**	5400	5400	**5400**	5400	-	**-**	-	-	**-**	-
	OHL Input Shaft	(A)	**215**	225	(A)	**345**	360	-	**-**	-	-	**-**	-
	OHL Output Shaft	2200	**2200**	2200	2200	**2200**	2200	-	**-**	-	-	**-**	-

Service factor: 1.0

(A) (B) (C) - See footnotes page on inside back cover

Blank areas (-) indicate configuration not available

ILH 68

Size: H_682

Double reduction – Clamp collar, three-piece coupled, separate

NEMA motor frame		56C			—			140TC			180TC			—			210TC					250TC
IEC motor frame		71D			80D			90D			100D			112D			132D					—
Separate group		71			80			90			100			112			132					—
Ratio	Output Rating data	3450	1750	1160	3450	1750	1160	3450	1750	1160	3450	1750	1160	3450	1750	1160	3450	1750	1160	3450	1750	1160
	Output RPM	–	–	–	–	–	–	–	–	–	989	501	332	989	501	332	989	501	332	989	501	332
	Input Hp (max) (C)	–	–	–	–	–	–	–	–	–	20.44	10.37	6.87	27.38	13.89	9.20	39.98	26.64	18.15	39.98	26.64	18.15
3.49	Output torque, in-lb	–	–	–	–	–	–	–	–	–	1303	1303	1303	1745	1745	1745	2549	3349	3441	2549	3349	3441
	OHL input shaft	–	–	–	–	–	–	–	–	–	(A)	713	742	(A)	843	877	(A)	948	986	(A)	948	986
	OHL output shaft (B)	–	–	–	–	–	–	–	–	–	(A)	1498	904	(A)	1498	904	(A)	1498	1466	(A)	1498	1466
	Output RPM	–	–	–	–	–	–	–	–	–	818	415	275	818	415	275	818	415	275	818	415	275
	Input Hp (max) (C)	–	–	–	–	–	–	–	–	–	20.40	10.35	6.86	27.31	13.85	9.18	37.46	24.96	17.08	37.46	24.96	17.08
4.22	Output torque, in-lb	–	–	–	–	–	–	–	–	–	1573	1573	1573	2106	2106	2106	2888	3794	3915	2888	3794	3915
	OHL input shaft	–	–	–	–	–	–	–	–	–	(A)	713	742	(A)	843	877	(A)	947	985	(A)	947	985
	OHL output shaft (B)	–	–	–	–	–	–	–	–	–	(A)	1473	1466	(A)	1473	1466	(A)	1473	1466	(A)	1473	1466
	Output RPM	–	–	–	682	346	229	682	346	229	682	346	229	682	346	229	682	346	229	682	346	229
	Input Hp (max) (C)	–	–	–	4.84	2.46	1.63	9.86	5.00	3.32	20.41	10.35	6.86	27.34	13.87	9.19	34.92	23.27	15.78	34.92	23.27	15.78
5.06	Output torque, in-lb	–	–	–	448	448	448	912	912	912	1887	1887	1887	2527	2527	2527	3228	4241	4337	3228	4241	4337
	OHL input shaft	–	–	–	(A)	346	360	(A)	453	471	(A)	711	740	(A)	840	875	(A)	947	985	(A)	947	985
	OHL output shaft (B)	–	–	–	(A)	1466	1057	(A)	1466	1057	(A)	1466	1057	(A)	1466	1057	(A)	1466	1057	(A)	1466	1057
	Output RPM	–	–	–	582	295	196	582	295	196	582	295	196	582	295	196	582	295	196	582	295	196
	Input Hp (max) (C)	–	–	–	4.85	2.46	1.63	9.86	5.00	3.32	20.42	10.36	6.87	27.34	13.87	9.19	32.62	20.31	13.46	32.62	20.31	13.46
5.93	Output torque, in-lb	–	–	–	525	525	525	1069	1069	1069	2212	2212	2212	2962	2962	2962	3534	4337	4337	3534	4337	4337
	OHL input shaft	–	–	–	(A)	346	360	(A)	454	472	(A)	707	737	(A)	836	872	(A)	952	992	(A)	952	992
	OHL output shaft (B)	–	–	–	(A)	1466	1057	(A)	1466	1057	(A)	1466	1057	(A)	1466	1057	(A)	1466	1057	(A)	1466	1057
	Output RPM	–	–	–	–	–	–	–	–	–	513	260	173	513	260	173	513	260	173	513	260	173
	Input Hp (max) (C)	–	–	–	–	–	–	–	–	–	20.42	10.36	6.87	27.34	13.87	9.19	37.03	24.68	17.31	37.03	24.68	17.31
6.72	Output torque, in-lb	–	–	–	–	–	–	–	–	–	2507	2507	2507	3356	3356	3356	4546	5973	6320	4546	5973	6320
	OHL input shaft	–	–	–	–	–	–	–	–	–	(A)	713	742	(A)	843	877	(A)	953	986	(A)	953	986
	OHL output shaft (B)	–	–	–	–	–	–	–	–	–	(A)	1466	1057	(A)	1466	1057	(A)	1466	1057	(A)	1466	1057
	Output RPM	–	–	–	–	–	–	–	–	–	425	216	143	425	216	143	425	216	143	425	216	143
	Input Hp (max) (C)	–	–	–	–	–	–	–	–	–	20.41	10.35	6.86	27.33	13.86	9.19	33.73	22.48	15.77	33.73	22.48	15.77
8.11	Output torque, in-lb	–	–	–	–	–	–	–	–	–	3024	3024	3024	4049	4049	4049	4997	6565	6948	4997	6565	6948
	OHL input shaft	–	–	–	–	–	–	–	–	–	(A)	713	742	(A)	843	877	(A)	954	985	(A)	954	985
	OHL output shaft (B)	–	–	–	–	–	–	–	–	–	(A)	1057	962	(A)	1057	962	(A)	1057	962	(A)	1057	962
	Output RPM	–	–	–	355	180	119	355	180	119	355	180	119	355	180	119	355	180	119	355	180	119
	Input Hp (max) (C)	–	–	–	4.84	2.46	1.63	9.86	5.00	3.32	20.42	10.36	6.86	27.34	13.87	9.19	30.28	20.17	13.39	30.28	20.17	13.39
9.73	Output torque, in-lb	–	–	–	861	861	861	1753	1753	1753	3629	3629	3629	4859	4859	4859	5382	7067	7081	5382	7067	7081
	OHL input shaft	–	–	–	(A)	346	360	(A)	453	471	(A)	711	740	(A)	840	875	(A)	955	985	(A)	955	985
	OHL output shaft (B)	–	–	–	1466	1057	962	1466	1057	962	1466	1057	962	1466	1057	962	1466	1057	962	1466	1057	962
	Output RPM	–	–	–	303	154	102	303	154	102	303	154	102	303	154	102	303	154	102	303	154	102
	Input Hp (max) (C)	–	–	–	4.85	2.46	1.63	9.87	5.01	3.32	20.43	10.36	6.87	27.25	13.87	9.20	27.25	17.25	11.43	27.25	17.25	11.43
11.40	Output torque, in-lb	–	–	–	1009	1009	1009	2055	2055	2055	4254	4254	4254	5676	5696	5696	5676	7081	7081	5676	7091	7081
	OHL input shaft	–	–	–	(A)	346	360	(A)	454	472	(A)	707	737	(A)	836	872	(A)	957	992	(A)	957	992
	OHL output shaft (B)	–	–	–	1466	962	962	1466	962	962	1466	962	962	1466	962	962	1466	962	962	1466	962	962
	Output RPM	–	–	–	254	129	85	254	129	85	254	129	85	254	129	85	254	129	85	–	–	–
	Input Hp (max) (C)	–	–	–	4.85	2.46	1.63	9.86	5.00	3.32	20.42	10.36	6.87	24.22	13.74	9.19	24.22	14.47	9.59	–	–	–
13.59	Output torque, in-lb	–	–	–	1203	1203	1203	2449	2449	2449	5070	5070	5070	6013	6726	6789	6013	7081	7081	–	–	–
	OHL input shaft	–	–	–	(A)	346	360	(A)	456	470	(A)	708	738	(A)	838	873	(A)	957	990	–	–	–
	OHL output shaft (B)	–	–	–	1466	962	1306	1466	962	1306	1466	962	1306	1466	962	1306	1466	962	1306	–	–	–
	Output RPM	234	119	79	234	119	79	234	119	79	234	119	79	234	119	79	234	119	79	–	–	–
	Input Hp (max) (C)	3.98	2.02	1.34	4.85	2.46	1.63	9.86	5.00	3.32	19.95	10.36	6.87	22.93	13.25	8.84	22.92	13.34	8.84	–	–	–
14.74	Output torque, in-lb	1072	1072	1072	1305	1305	1305	2656	2656	2656	5373	5499	5499	6173	7031	7081	6173	7081	7081	–	–	–
	OHL input shaft	(A)	218	226	(A)	346	360	(A)	456	474	(A)	712	736	(A)	828	872	(A)	958	991	–	–	–
	OHL output shaft (B)	1057	962	1306	1057	962	1306	1057	962	1306	1057	962	1306	1057	962	1306	1057	962	1306	–	–	–
	Output RPM	210	106	71	210	106	71	210	106	71	210	106	71	210	106	71	210	106	71	–	–	–
	Input Hp (max) (C)	3.98	2.02	1.34	4.85	2.46	1.63	9.87	5.00	3.32	18.96	9.95	6.85	21.29	11.95	7.92	21.29	11.95	7.92	–	–	–
16.45	Output torque, in-lb	1196	1196	1196	1456	1456	1456	2965	2965	2965	5698	5892	6123	6398	7081	7081	6398	7081	7081	–	–	–
	OHL input shaft	(A)	218	226	(A)	346	360	(A)	456	474	(A)	695	740	(A)	840	870	(A)	950	995	–	–	–
	OHL output shaft (B)	1057	962	1306	1057	962	1306	1057	962	1306	1057	962	1306	1057	962	1306	1057	962	1306	–	–	–

Service factor: 1.0

(A) (B) (C) - See footnotes page on inside back cover

Blank areas (-) indicate configuration not available

ILH 68

Size: H_682

Double reduction – Clamp collar, three-piece coupled, separate

NEMA motor frame		56C			—			140TC			180TC			—			210TC					250TC
IEC motor frame		71D			80D			90D			100D			112D			132D					—
Separate group		71			80			90			100			112			132					—
Ratio	Output Rating data	3450	1750	1160	3450	1750	1160	3450	1750	1160	3450	1750	1160	3450	1750	1160	3450	1750	1160	3450	1750	1160
	Output RPM	194	**98**	65	194	**98**	65	194	**98**	65	194	**98**	65	194	**98**	65	194	**98**	65	–	–	–
	Input Hp (max) **(C)**	3.98	**2.02**	1.34	4.85	**2.46**	1.63	9.86	**5.00**	3.32	18.23	**9.56**	6.59	20.16	**11.03**	7.31	20.16	**11.03**	7.31	–	–	–
17.82	Output torque, in-lb	1296	**1296**	1296	1577	**1577**	1577	3211	**3211**	3211	5936	**6136**	6378	6564	**7081**	7081	6564	**7081**	7081	–	–	–
	OHL input shaft	**(A)**	**217**	226	**(A)**	**346**	360	**(A)**	**455**	474	**(A)**	**660**	740	**(A)**	**837**	872	**(A)**	**949**	996	–	–	–
	OHL output shaft **(B)**	1057	**1306**	1306	1057	**1306**	1306	1057	**1306**	1306	1057	**1306**	1306	1057	**1306**	1306	1057	**1306**	1306	–	–	–
	Output RPM	171	**87**	57	171	**87**	57	171	**87**	57	171	**87**	57	171	**87**	57	171	**87**	57	–	–	–
	Input Hp (max) **(C)**	3.98	**2.02**	1.34	4.84	**2.46**	1.63	9.47	**4.94**	3.32	17.10	**8.97**	6.18	18.52	**9.73**	6.45	18.52	**9.73**	6.45	–	–	–
20.20	Output torque, in-lb	1469	**1469**	1469	1788	**1788**	1788	3493	**3593**	3639	6309	**6524**	6781	6833	**7081**	7081	6833	**7081**	7081	–	–	–
	OHL input shaft	**(A)**	**219**	228	**(A)**	**346**	360	**(A)**	**454**	472	**(A)**	**602**	739	**(A)**	**840**	875	**(A)**	**952**	997	–	–	–
	OHL output shaft **(B)**	1057	**1306**	1940	1057	**1306**	1940	1057	**1306**	1940	1057	**1306**	1940	1057	**1306**	1940	1057	**1306**	1940	–	–	–
	Output RPM	159	**80**	53	159	**80**	53	159	**80**	53	159	**80**	53	159	**80**	53	159	**80**	53	–	–	–
	Input Hp (max) **(C)**	3.98	**2.02**	1.34	4.84	**2.46**	1.63	9.11	**4.76**	3.29	16.46	**8.63**	5.95	17.60	**9.04**	5.99	17.60	**9.04**	5.99	–	–	–
21.76	Output torque, in-lb	1582	**1582**	1582	1926	**1926**	1926	3622	**3727**	3885	6542	**6765**	7032	6995	**7081**	7081	6995	**7081**	7081	–	–	–
	OHL input shaft	**(A)**	**218**	227	**(A)**	**346**	360	**(A)**	**454**	471	**(A)**	**566**	739	**(A)**	**841**	876	**(A)**	**953**	997	–	–	–
	OHL output shaft **(B)**	962	**1306**	1940	962	**1306**	1940	962	**1306**	1940	962	**1306**	1940	962	**1306**	1940	962	**1306**	1940	–	–	–
	Output RPM	147	**74**	49	147	**74**	49	147	**74**	49	147	**74**	49	147	**74**	49	147	**74**	49	–	–	–
	Input Hp (max) **(C)**	3.98	**2.02**	1.34	4.84	**2.46**	1.63	8.74	**4.56**	3.15	15.81	**8.29**	5.54	16.47	**8.36**	5.54	16.47	**8.36**	5.54	–	–	–
23.53	Output torque, in-lb	1711	**1711**	1711	2082	**2082**	2082	3758	**3867**	4031	6794	**7025**	7081	7081	**7081**	7081	7081	**7081**	7081	–	–	–
	OHL input shaft	(A)	218	227	**(A)**	**346**	360	**(A)**	**454**	471	**(A)**	**525**	740	**(A)**	**842**	877	**(A)**	**955**	990	–	–	–
	OHL output shaft **(B)**	962	**1306**	1940	962	**1306**	1940	962	**1306**	1940	962	**1306**	1940	962	**1306**	1940	962	**1306**	1940	–	–	–
	Output RPM	135	**68**	45	135	**68**	45	135	**68**	45	135	**68**	45	135	**68**	45	135	**68**	45	–	–	–
	Input Hp (max) **(C)**	3.98	**2.02**	1.34	4.84	**2.46**	1.63	8.36	**4.36**	3.01	14.88	**7.70**	5.10	15.17	**7.70**	5.10	15.17	**7.70**	5.10	–	–	–
25.55	Output torque, in-lb	1858	**1858**	1858	2261	**2261**	2261	3901	**4014**	4185	6943	**7081**	7081	7081	**7081**	7081	7081	**7081**	7081	–	–	–
	OHL input shaft	**(A)**	**218**	226	**(A)**	**345**	359	**(A)**	**454**	471	**(A)**	**536**	741	**(A)**	**843**	877	**(A)**	**956**	989	–	–	–
	OHL output shaft **(B)**	962	**1306**	1940	962	**1306**	1940	962	**1306**	1940	962	**1306**	1940	962	**1306**	1940	962	**1306**	1940	–	–	–
	Output RPM	122	**62**	41	122	**62**	41	122	**62**	41	122	**62**	41	122	**62**	41	122	**62**	41	–	–	–
	Input Hp (max) **(C)**	3.69	**2.01**	1.34	4.84	**2.46**	1.63	7.90	**4.12**	2.85	13.72	**6.96**	4.61	13.72	**6.96**	4.61	13.72	**6.96**	4.61	–	–	–
28.25	Output torque, in-lb	1904	**2040**	2054	2500	**2500**	2500	4075	**4195**	4373	7081	**7081**	7081	7081	**7081**	7081	7081	**7081**	7081	–	–	–
	OHL input shaft	**(A)**	**217**	226	**(A)**	**345**	359	**(A)**	**454**	471	**(A)**	**566**	742	**(A)**	**843**	878	**(A)**	**957**	992	–	–	–
	OHL output shaft **(B)**	962	**1940**	1940	962	**1940**	1940	962	**1940**	1940	962	**1940**	1940	962	**1940**	1940	962	**1940**	1940	–	–	–
	Output RPM	113	**57**	38	113	**57**	38	113	**57**	38	113	**57**	38	113	**57**	38	113	**57**	38	–	–	–
	Input Hp (max) **(C)**	3.46	**1.88**	1.29	4.85	**2.46**	1.63	7.55	**3.94**	2.73	12.67	**6.43**	4.26	12.67	**6.43**	4.26	12.67	**6.43**	4.26	–	–	–
30.60	Output torque, in-lb	1934	**2072**	2147	2709	**2709**	2709	4222	**4346**	4531	7081	**7081**	7081	7081	**7081**	7081	7081	**7081**	7081	–	–	–
	OHL input shaft	**(A)**	**218**	227	**(A)**	**344**	358	**(A)**	**453**	471	**(A)**	**587**	742	**(A)**	**844**	878	**(A)**	**957**	993	–	–	–
	OHL output shaft **(B)**	962	**1940**	2765	962	**1940**	2765	962	**1940**	2765	962	**1940**	2765	962	**1940**	2765	962	**1940**	2765	–	–	–
	Output RPM	100	**51**	34	100	**51**	34	100	**51**	34	100	**51**	37	100	**51**	34	–	–	–	–	–	–
	Input Hp (max) **(C)**	3.14	**1.70**	1.17	4.84	**2.46**	1.63	7.06	**3.69**	2.55	11.24	**5.70**	3.78	11.24	**5.70**	3.78	–	–	–	–	–	–
34.49	Output Torque, In–Lb	1975	**2116**	2193	3052	**3052**	3052	4449	**4582**	4777	7081	**7081**	7081	7081	**7081**	7081	-	–	–	–	–	–
	OHL input shaft	**(A)**	**218**	227	**(A)**	**344**	357	**(A)**	**453**	471	**(A)**	**617**	739	**(A)**	**844**	879	–	–	–	–	–	–
	OHL output shaft **(B)**	962	**1940**	2765	962	**1940**	2765	962	**1940**	2765	962	**1940**	2765	962	**1940**	2765	–	–	–	–	–	–
	Output RPM	91	**46**	31	91	**46**	31	91	**46**	31	91	**46**	37	91	**46**	31	–	–	–	–	–	–
	Input Hp (max) **(C)**	2.90	**1.58**	1.08	4.60	**2.46**	1.63	6.72	**3.51**	2.43	10.27	**5.21**	3.45	10.24	**5.21**	3.45	–	–	–	–	–	–
37.76	Output torque, in-lb	2004	**2146**	2225	3176	**3342**	3342	4636	**4773**	4978	7081	**7081**	7081	7063	**7081**	7081	–	–	–	–	–	–
	OHL input shaft	**(A)**	**218**	227	**(A)**	**343**	356	**(A)**	**457**	472	**(A)**	**637**	740	**(A)**	**845**	879	–	–	–	–	–	–
	OHL output shaft **(B)**	1306	**1940**	2765	1306	**1940**	2765	1306	**1940**	2765	1306	**1940**	2765	1306	**1940**	2765	–	–	–	–	–	–
	Output RPM	82	**42**	28	82	**42**	28	82	**42**	28	82	**42**	37	–	–	–	–	–	–	–	–	–
	Input Hp (max) **(C)**	2.65	**1.44**	0.99	4.31	**2.36**	1.55	6.29	**3.29**	2.27	7.77	**4.67**	2.89	–	–	–	–	–	–	–	–	–
42.06	Output torque, in-lb	2036	**2181**	2260	3310	**3576**	3550	4834	**4977**	5189	5970	**7081**	6602	–	–	–	–	–	–	–	–	–
	OHL input shaft	**(A)**	**218**	227	**(A)**	**343**	356	**(A)**	**457**	472	**(A)**	**–**	741	–	–	–	–	–	–	–	–	–
	OHL output shaft **(B)**	1306	**1940**	2765	1306	**1940**	2765	1306	**1940**	2765	1306	**1940**	2765	–	–	–	–	–	–	–	–	–
	Output RPM	72	**36**	24	72	**36**	24	72	**36**	24	–	–	–	–	–	–	–	–	–	–	–	–
	Input Hp (max) **(C)**	2.36	**1.28**	0.88	3.94	**2.16**	1.42	5.83	**3.04**	2.10	–	–	–	–	–	–	–	–	–	–	–	–
48.09	Output torque, in-lb	2073	**2220**	2301	3463	**3747**	3715	5118	**5272**	5497	–	–	–	–	–	–	–	–	–	–	–	–
	OHL input shaft	**(A)**	**219**	227	**(A)**	**343**	356	**(A)**	**457**	475	–	–	–	–	–	–	–	–	–	–	–	–
	OHL output shaft **(B)**	1306	**2765**	3091	1306	**2765**	3091	1306	**2765**	3091	–	–	–	–	–	–	–	–	–	–	–	–

Service factor: 1.0

(A) (B) (C) - See footnotes page on inside back cover

Blank areas (-) indicate configuration not available

ILH 68

Size: H_683

Triple reduction – Clamp collar, three-piece coupled, separate

NEMA motor frame		56C			—			140TC			180TC		
IEC motor frame		71D			80D			90D			100D		
Separate group		71			80			90			100		
Ratio	Output Rating data	3450	1750	1160	3450	1750	1160	3450	1750	1160	3450	1750	1160
	Output RPM	–	–	–	91	**46**	31	91	**46**	31	91	**46**	31
	Input Hp (max) **(C)**	–	–	–	4.84	**2.46**	1.63	7.84	**5.00**	3.32	7.84	**5.20**	3.45
37.80	Output torque, in-lb	–	–	–	3346	**3346**	3346	5415	**6811**	6811	5415	**7081**	7081
	OHL input shaft	–	–	–	**(A)**	**346**	360	**(A)**	**453**	471	**(A)**	**714**	743
	OHL output shaft **(B)**	–	–	–	1306	**1940**	2765	1306	**1940**	2765	1306	**1940**	2765
	Output RPM	–	–	–	76	**39**	26	76	**39**	26	76	**39**	26
	Input Hp (max) **(C)**	–	–	–	4.85	**2.46**	1.63	6.97	**4.33**	2.87	6.97	**4.33**	2.87
45.41	Output torque, in-lb	–	–	–	4019	**4019**	4019	5780	**7081**	7081	5780	**7081**	7081
	OHL input shaft	–	–	–	**(A)**	**346**	360	**(A)**	**455**	473	**(A)**	**715**	744
	OHL output shaft **(B)**	–	–	–	1306	**2765**	2765	1306	**2765**	2765	1306	**2765**	2765
	Output RPM	–	–	–	65	**33**	22	65	**33**	22	65	**33**	22
	Input Hp (max) **(C)**	–	–	–	4.84	**2.46**	1.63	6.18	**3.68**	2.44	6.18	**3.68**	2.44
53.47	Output torque, in-lb	–	–	–	4732	**4732**	4732	6039	**7081**	7081	6039	**7081**	7081
	OHL input shaft	–	–	–	**(A)**	**346**	360	**(A)**	**456**	474	**(A)**	**715**	744
	OHL output shaft **(B)**	–	–	–	1306	**2765**	3091	1306	**2765**	3091	1306	**2765**	3091
	Output RPM	58	**29**	19	58	**29**	19	58	**29**	19	58	**29**	19
	Input Hp (max) **(C)**	3.98	**2.02**	1.34	4.85	**2.46**	1.63	5.70	**3.28**	2.18	5.70	**3.28**	2.18
59.91	Output torque, in-lb	4356	**4356**	4356	5303	**5303**	5303	6234	**7081**	7081	6234	**7081**	7081
	OHL input shaft	**(A)**	**218**	227	**(A)**	**346**	360	**(A)**	**456**	475	**(A)**	**715**	744
	OHL output shaft **(B)**	1940	**2765**	3091	1940	**2765**	3091	1940	**2765**	3091	1940	**2765**	3091
	Output RPM	51	**26**	17	51	**26**	17	51	**26**	17	51	**26**	17
	Input Hp (max) **(C)**	3.98	**2.02**	1.34	4.85	**2.46**	1.63	5.25	**2.93**	1.94	5.25	**2.93**	1.94
67.14	Output torque, in-lb	4882	**4882**	4882	5943	**5943**	5943	6440	**7081**	7081	6440	**7081**	7081
	OHL input shaft	**(A)**	**217**	226	**(A)**	**346**	360	**(A)**	**457**	475	**(A)**	**708**	737
	OHL output shaft **(B)**	1940	**2765**	3091	1940	**2765**	3091	1940	**2765**	3091	1940	**2765**	3091
	Output RPM	47	**24**	16	47	**24**	16	47	**24**	16	47	**24**	16
	Input Hp (max) **(C)**	3.98	**2.02**	1.34	4.84	**2.46**	1.63	4.93	**2.68**	1.78	4.93	**2.68**	1.78
73.30	Output torque, in-lb	5329	**5329**	5329	6487	**6487**	6487	6606	**7081**	7081	6606	**7081**	7081
	OHL input shaft	**(A)**	**219**	228	**(A)**	**346**	360	**(A)**	**457**	475	**(A)**	**708**	737
	OHL output shaft **(B)**	1940	**3091**	3091	1940	**3091**	3091	1940	**3091**	3091	1940	**3091**	3091
	Output RPM	43	**22**	14	43	**22**	14	43	**22**	14	43	**22**	14
	Input Hp (max) **(C)**	3.98	**2.02**	1.34	4.62	**2.44**	1.62	4.62	**2.44**	1.62	4.62	**2.44**	1.62
80.46	Output torque, in-lb	5850	**5850**	5850	6789	**7081**	7081	6789	**7081**	7081	6789	**7081**	7081
	OHL input shaft	**(A)**	**219**	227	**(A)**	**346**	360	**(A)**	**457**	476	**(A)**	**710**	738
	OHL output shaft **(B)**	1940	**3091**	3170	1940	**3091**	3170	1940	**3091**	3170	1940	**3091**	3170
	Output RPM	39	**20**	13	39	**20**	13	39	**20**	13	–	–	–
	Input Hp (max) **(C)**	3.98	**2.02**	1.34	4.32	**2.22**	1.47	4.32	**2.22**	1.47	–	–	–
88.59	Output torque, in-lb	6441	**6441**	6441	6988	**7081**	7081	6988	**7081**	7081	–	–	–
	OHL input shaft	**(A)**	**218**	227	**(A)**	**346**	360	**(A)**	**457**	476	–	–	–
	OHL output shaft **(B)**	2765	**3091**	3170	2765	**3091**	3170	2765	**3091**	3170	–	–	–
	Output RPM	36	**18**	12	36	**18**	12	36	**18**	12	–	–	–
	Input Hp (max) **(C)**	3.98	**2.02**	1.34	4.03	**2.04**	1.36	4.03	**2.04**	1.36	–	–	–
96.16	Output torque, in-lb	6991	**6991**	6991	7081	**7081**	7081	7081	**7081**	7081	–	–	–
	OHL input shaft	**(A)**	**217**	226	**(A)**	**346**	360	**(A)**	**457**	476	–	–	–
	OHL output shaft **(B)**	2765	**3091**	3170	2765	**3091**	3170	2765	**3091**	3170	–	–	–
	Output RPM	33	**17**	11	33	**17**	11	33	**17**	11	–	–	–
	Input Hp (max) **(C)**	3.70	**1.88**	1.24	3.70	**1.88**	1.24	3.70	**1.88**	1.24	–	–	–
104.80	Output torque, in-lb	7081	**7081**	7081	7081	**7081**	7081	7081	**7081**	7081	–	–	–
	OHL input shaft	**(A)**	**218**	227	**(A)**	**346**	360	**(A)**	**457**	476	–	–	–
	OHL output shaft **(B)**	2765	**3091**	3170	2765	**3091**	3170	2765	**3091**	3170	–	–	–
	Output RPM	30	**15**	10	30	**15**	10	30	**15**	10	–	–	–
	Input Hp (max) **(C)**	3.38	**1.71**	1.14	3.38	**1.71**	1.14	3.38	**1.71**	1.14	–	–	–
114.78	Output torque, in-lb	7081	**7081**	7081	7081	**7081**	7081	7081	**7081**	7081	–	–	–
	OHL input shaft	**(A)**	**218**	227	**(A)**	**346**	360	**(A)**	**457**	476	–	–	–
	OHL output shaft **(B)**	2765	**3170**	3170	2765	**3170**	3170	2765	**3170**	3170	–	–	–

Service factor: 1.0

(A) (B) (C) - See footnotes page on inside back cover

Blank areas (-) indicate configuration not available

ILH 68

Size: H_683

Triple reduction – Clamp collar, three-piece coupled, separate

NEMA motor frame		56C			—			140TC			180TC		
IEC motor frame		71D			80D			90D			100D		
Separate group		71			80			90			100		
Ratio	Output Rating data	3450	1750	1160	3450	1750	1160	3450	1750	1160	3450	1750	1160
	Output RPM	27	**14**	9	27	**14**	9	27	**14**	9	–	–	–
	Input Hp (max) **(C)**	3.07	**1.56**	1.03	3.07	**1.56**	1.03	3.07	**1.56**	1.03	–	–	–
126.41	Output torque, in-lb	7081	**7081**	7081	7081	**7081**	7081	7081	**7081**	7081	–	–	–
	OHL input shaft	**(A)**	**219**	227	**(A)**	**346**	360	**(A)**	**453**	471	–	–	–
	OHL output shaft **(B)**	2765	**3170**	3170	2765	**3170**	3170	2765	**3170**	3170	–	–	–
	Output RPM	24	**12**	8	24	**12**	8	24	**12**	8	–	–	–
	Input Hp (max) **(C)**	2.67	**1.35**	0.90	2.67	**1.35**	0.90	2.67	**1.35**	0.90	–	–	–
145.38	Output torque, in-lb	7081	**7081**	7081	7081	**7081**	7081	7081	**7081**	7081	–	–	–
	OHL input shaft	**(A)**	**219**	228	**(A)**	**346**	360	**(A)**	**454**	472	–	–	–
	OHL output shaft **(B)**	3091	**3170**	3170	3091	**3170**	3170	3091	**3170**	3170	–	–	–
	Output RPM	22	**11**	7	22	**11**	7	22	**11**	7	–	–	–
	Input Hp (max) **(C)**	2.46	**1.25**	0.83	2.46	**1.25**	0.83	2.46	**1.25**	0.83	–	–	–
157.50	Output torque, in-lb	7081	**7081**	7081	7081	**7081**	7081	7081	**7081**	7081	–	–	–
	OHL input shaft	**(A)**	**219**	226	**(A)**	**343**	357	**(A)**	**454**	473	–	–	–
	OHL output shaft **(B)**	3091	**3170**	3170	3091	**3170**	3170	3091	**3170**	3170	–	–	–
	Output RPM	20	**10**	7	20	**10**	7	20	**10**	7	–	–	–
	Input Hp (max) **(C)**	2.23	**1.13**	0.75	2.23	**1.13**	0.75	2.23	**1.13**	0.75	–	–	–
174.08	Output torque, in-lb	7081	**7081**	7081	7081	**7081**	7081	7081	**7081**	7081	–	–	–
	OHL input shaft	**(A)**	**219**	227	**(A)**	**344**	357	**(A)**	**455**	473	–	–	–
	OHL output shaft **(B)**	3091	**3170**	3170	3091	**3170**	3170	3091	**3170**	3170	–	–	–
	Output RPM	17	**9**	6	17	**9**	6	17	**9**	6	–	–	–
	Input Hp (max) **(C)**	1.91	**0.97**	0.64	1.91	**0.97**	0.64	1.91	**0.97**	0.64	–	–	–
203.09	Output torque, in-lb	7081	**7081**	7081	7081	**7081**	7081	7081	**7081**	7081	–	–	–
	OHL input shaft	**(A)**	**218**	227	**(A)**	**345**	358	**(A)**	**456**	474	–	–	–
	OHL output shaft **(B)**	3091	**3170**	3170	3091	**3170**	3170	3091	**3170**	3170	–	–	–
	Output RPM	15	**8**	5	15	**8**	5	15	**8**	5	–	–	–
	Input Hp (max) **(C)**	1.71	**0.87**	0.58	1.71	**0.87**	0.58	1.71	**0.87**	0.58	–	–	–
226.07	Output torque, in-lb	7081	**7081**	7081	7081	**7081**	7081	7081	**7081**	7081	–	–	–
	OHL input shaft	**(A)**	**219**	227	**(A)**	**345**	359	**(A)**	**456**	474	–	–	–
	OHL output shaft **(B)**	3170	**3170**	3170	3170	**3170**	3170	3170	**3170**	3170	–	–	–
	Output RPM	14	**7**	5	14	**7**	5	14	**7**	5	–	–	–
	Input Hp (max) **(C)**	1.56	**0.79**	0.52	1.56	**0.79**	0.52	1.56	**0.79**	0.52	–	–	–
248.68	Output torque, in-lb	7081	**7081**	7081	7081	**7081**	7081	7081	**7081**	7081	–	–	–
	OHL input shaft	(A)	**219**	228	**(A)**	**345**	359	**(A)**	**456**	475	–	–	–
	OHL output shaft **(B)**	3170	**3170**	3170	3170	**3170**	3170	3170	**3170**	3170	–	–	–
	Output RPM	12	**6**	4	12	**6**	4	–	–	–	–	–	–
	Input Hp (max) **(C)**	1.38	**0.70**	0.46	1.38	**0.70**	0.46	–	–	–	–	–	–
281.01	Output torque, in-lb	7081	**7081**	7081	7081	**7081**	7081	–	–	–	–	–	–
	OHL input shaft	**(A)**	**219**	228	**(A)**	**346**	359	–	–	–	–	–	–
	OHL output shaft **(B)**	3170	**3170**	3170	3170	**3170**	3170	–	–	–	–	–	–

Service factor: 1.0

(A) (B) (C) - See footnotes page on inside back cover

Blank areas (-) indicate configuration not available

ILH 68

Size: H_684

Four-stage reduction – Clamp collar, three-piece coupled, separate

NEMA motor frame		56C			—			140TC			180TC		
IEC motor frame		71D			80D			90D			100D		
Separate group		71			80			90			100		
Ratio	**Output Rating data**	**3450**	**1750**	**1160**	**3450**	**1750**	**1160**	**3450**	**1750**	**1160**	**3450**	**1750**	**1160**
	Output RPM	10.59	**5.37**	3.56	10.59	**5.37**	3.56	10.59	**5.37**	3.56	10.59	**5.37**	3.56
	Input Hp (max) **(C)**	1.19	**0.60**	0.40	1.19	**0.60**	0.40	1.19	**0.60**	0.40	1.19	**0.60**	0.40
325.65	Output torque, in-lb	7081	**7081**	7081	7081	**7081**	7081	7081	**7081**	7081	7081	**7081**	7081
	OHL input shaft	(A)	(A)	(A)	(A)	(A)	(A)	(A)	(A)	(A)	(A)	(A)	(A)
	OHL output shaft **(B)**	3091	**3170**	3170	3091	**3170**	3170	3091	**3170**	3170	3091	**3170**	3170
	Output RPM	9.49	**4.81**	3.19	9.49	**4.81**	3.19	9.49	**4.81**	3.19	9.49	**4.81**	3.19
	Input Hp (max) **(C)**	1.07	**0.54**	0.36	1.07	**0.54**	0.36	1.07	**0.54**	0.36	1.07	**0.54**	0.36
363.45	Output torque, in-lb	7081	**7081**	7081	7081	**7081**	7081	7081	**7081**	7081	7081	**7081**	7081
	OHL input shaft	(A)	(A)	(A)	(A)	(A)	(A)	(A)	(A)	(A)	(A)	(A)	(A)
	OHL output shaft **(B)**	3091	**3170**	3170	3091	**3170**	3170	3091	**3170**	3170	3091	**3170**	3170
	Output RPM	9.18	**4.66**	3.09	9.18	**4.66**	3.09	9.18	**4.66**	3.09	9.18	**4.66**	3.09
	Input Hp (max) **(C)**	1.03	**0.52**	0.35	1.03	**0.52**	0.35	1.03	**0.52**	0.35	1.03	**0.52**	0.35
375.72	Output torque, in-lb	7081	**7081**	7081	7081	**7081**	7081	7081	**7081**	7081	7081	**7081**	7081
	OHL input shaft	(A)	(A)	(A)	(A)	(A)	(A)	(A)	(A)	(A)	(A)	(A)	(A)
	OHL output shaft **(B)**	3091	**3170**	3170	3091	**3170**	3170	3091	**3170**	3170	3091	**3170**	3170
	Output RPM	8.19	**4.15**	2.75	8.19	**4.15**	2.75	8.19	**4.15**	2.75	8.19	**4.15**	2.75
	Input Hp (max) **(C)**	0.92	**0.47**	0.31	0.92	**0.47**	0.31	0.92	**0.47**	0.31	0.92	**0.47**	0.31
421.24	Output torque, in-lb	7081	**7081**	7081	7081	**7081**	7081	7081	**7081**	7081	7081	**7081**	7081
	OHL input shaft	(A)	(A)	(A)	(A)	(A)	(A)	(A)	(A)	(A)	(A)	(A)	(A)
	OHL output shaft **(B)**	2765	**3170**	3170	2765	**3170**	3170	2765	**3170**	3170	2765	**3170**	3170
	Output RPM	7.91	**4.01**	2.66	7.91	**4.01**	2.66	7.91	**4.01**	2.66	7.91	**4.01**	2.66
	Input Hp (max) **(C)**	0.89	**0.45**	0.30	0.89	**0.45**	0.30	0.89	**0.45**	0.30	0.89	**0.45**	0.30
436.14	Output torque, in-lb	7081	**7081**	7081	7081	**7081**	7081	7081	**7081**	7081	7081	**7081**	7081
	OHL input shaft	(A)	(A)	(A)	(A)	(A)	(A)	(A)	(A)	(A)	(A)	(A)	(A)
	OHL output shaft **(B)**	3091	**3170**	3170	3091	**3170**	3170	3091	**3170**	3170	3091	**3170**	3170
	Output RPM	7.58	**3.85**	2.55	7.58	**3.85**	2.55	7.58	**3.85**	2.55	7.58	**3.85**	2.55
	Input Hp (max) **(C)**	0.85	**0.43**	0.29	0.85	**0.43**	0.29	0.85	**0.43**	0.29	0.85	**0.43**	0.29
454.92	Output torque, in-lb	7081	**7081**	7081	7081	**7081**	7081	7081	**7081**	7081	7081	**7081**	7081
	OHL input shaft	(A)	(A)	(A)	(A)	(A)	(A)	(A)	(A)	(A)	(A)	(A)	(A)
	OHL output shaft **(B)**	3091	**3170**	3170	3091	**3170**	3170	3091	**3170**	3170	3091	**3170**	3170
	Output RPM	7.17	**3.64**	2.41	7.17	**3.64**	2.41	7.17	**3.64**	2.41	7.17	**3.64**	2.41
	Input Hp (max) **(C)**	0.81	**0.41**	0.27	0.81	**0.41**	0.27	0.81	**0.41**	0.27	0.81	**0.41**	0.27
481.21	Output torque, in-lb	7081	**7081**	7081	7081	**7081**	7081	7081	**7081**	7081	7081	**7081**	7081
	OHL input shaft	(A)	(A)	(A)	(A)	(A)	(A)	(A)	(A)	(A)	(A)	(A)	(A)
	OHL output shaft **(B)**	3091	**3170**	3170	3091	**3170**	3170	3091	**3170**	3170	3091	**3170**	3170
	Output RPM	6.61	**3.35**	2.22	6.61	**3.35**	2.22	6.61	**3.35**	2.22	6.61	**3.35**	2.22
	Input Hp (max) **(C)**	0.74	**0.38**	0.25	0.74	**0.38**	0.25	0.74	**0.38**	0.25	0.74	**0.38**	0.25
522.24	Output torque, in-lb	7081	**7081**	7081	7081	**7081**	7081	7081	**7081**	7081	7081	**7081**	7081
	OHL input shaft	(A)	(A)	(A)	(A)	(A)	(A)	(A)	(A)	(A)	(A)	(A)	(A)
	OHL output shaft **(B)**	3091	**3170**	3170	3091	**3170**	3170	3091	**3170**	3170	3091	**3170**	3170
	Output RPM	6.22	**3.16**	2.09	6.22	**3.16**	2.09	6.22	**3.16**	2.09	6.22	**3.16**	2.09
	Input Hp (max) **(C)**	0.70	**0.35**	0.24	0.70	**0.35**	0.24	0.70	**0.35**	0.24	0.70	**0.35**	0.24
554.44	Output torque, in-lb	7081	**7081**	7081	7081	**7081**	7081	7081	**7081**	7081	7081	**7081**	7081
	OHL input shaft	(A)	(A)	(A)	(A)	(A)	(A)	(A)	(A)	(A)	(A)	(A)	(A)
	OHL output shaft **(B)**	3091	**3170**	3170	3091	**3170**	3170	3091	**3170**	3170	3091	**3170**	3170
	Output RPM	5.99	**3.04**	2.01	5.99	**3.04**	2.01	5.99	**3.04**	2.01	5.99	**3.04**	2.01
	Input Hp (max) **(C)**	0.67	**0.34**	0.23	0.67	**0.34**	0.23	0.67	**0.34**	0.23	0.67	**0.34**	0.23
576.20	Output torque, in-lb	7081	**7081**	7081	7081	**7081**	7081	7081	**7081**	7081	7081	**7081**	7081
	OHL input shaft	(A)	(A)	(A)	(A)	(A)	(A)	(A)	(A)	(A)	(A)	(A)	(A)
	OHL output shaft **(B)**	3091	**3170**	3170	3091	**3170**	3170	3091	**3170**	3170	3091	**3170**	3170

Service factor: 1.0

(A) (B) (C) - See footnotes page on inside back cover

Blank areas (-) indicate configuration not available

ILH 68

Size: H_684

Four-stage reduction – Clamp collar, three-piece coupled, separate

NEMA motor frame		56C			—			140TC			180TC		
IEC motor frame		71D			80D			90D			100D		
Separate group		71			80			90			100		
Ratio	Output Rating data	3450	1750	1160	3450	1750	1160	3450	1750	1160	3450	1750	1160
	Output RPM	5.28	**2.68**	1.77	5.28	**2.68**	1.77	5.28	**2.68**	1.77	5.28	**2.68**	1.77
	Input Hp (max) **(C)**	0.59	**0.30**	0.20	0.59	**0.30**	0.20	0.59	**0.30**	0.20	0.59	**0.30**	0.20
653.63	Output torque, in-lb	7081	**7081**	7081	7081	**7081**	7081	7081	**7081**	7081	7081	**7081**	7081
	OHL input shaft	(A)	(A)	(A)	(A)	(A)	(A)	(A)	(A)	(A)	(A)	(A)	(A)
	OHL output shaft **(B)**	3091	**3170**	3170	3091	**3170**	3170	3091	**3170**	3170	3091	**3170**	3170
	Output RPM	5.13	**2.60**	1.73	5.13	**2.60**	1.73	5.13	**2.60**	1.73	5.13	**2.60**	1.73
	Input Hp (max) **(C)**	0.58	**0.29**	0.19	0.58	**0.29**	0.19	0.58	**0.29**	0.19	0.58	**0.29**	0.19
672.23	Output torque, in-lb	7081	**7081**	7081	7081	**7081**	7081	7081	**7081**	7081	7081	**7081**	7081
	OHL input shaft	(A)	(A)	(A)	(A)	(A)	(A)	(A)	(A)	(A)	(A)	(A)	(A)
	OHL output shaft **(B)**	3091	**3170**	3170	3091	**3170**	3170	3091	**3170**	3170	3091	**3170**	3170
	Output RPM	4.78	**2.42**	1.61	4.78	**2.42**	1.61	4.78	**2.42**	1.61	4.78	**2.42**	1.61
	Input Hp (max) **(C)**	0.54	**0.27**	0.18	0.54	**0.27**	0.18	0.54	**0.27**	0.18	0.54	**0.27**	0.18
722.43	Output torque, in-lb	7081	**7081**	7081	7081	**7081**	7081	7081	**7081**	7081	7081	**7081**	7081
	OHL input shaft	(A)	(A)	(A)	(A)	(A)	(A)	(A)	(A)	(A)	(A)	(A)	(A)
	OHL output shaft **(B)**	3091	**3170**	3170	3091	**3170**	3170	3091	**3170**	3170	3091	**3170**	3170
	Output RPM	4.57	**2.32**	1.54	4.57	**2.32**	1.54	4.57	**2.32**	1.54	–	**–**	–
	Input Hp (max) **(C)**	0.51	**0.26**	0.17	0.51	**0.26**	0.17	0.51	**0.26**	0.17	–	**–**	–
754.56	Output torque, in-lb	7081	**7081**	7081	7081	**7081**	7081	7081	**7081**	7081	–	**–**	–
	OHL input shaft	**(A)**	**(A)**	**(A)**	**(A)**	**(A)**	**(A)**	**(A)**	**(A)**	**(A)**	–	**–**	–
	OHL output shaft **(B)**	2765	**3091**	3170	2765	**3091**	3170	2765	**3091**	3170	–	**–**	–
	Output RPM	4.19	**2.13**	1.41	4.19	**2.13**	1.41	4.19	**2.13**	1.41	4.19	**2.13**	1.41
	Input Hp (max) **(C)**	0.47	**0.24**	0.16	0.47	**0.24**	0.16	0.47	**0.24**	0.16	0.47	**0.24**	0.16
823.13	Output torque, in-lb	7081	**7081**	7081	7081	**7081**	7081	7081	**7081**	7081	7081	**7081**	7081
	OHL input shaft	(A)	(A)	(A)	(A)	(A)	(A)	(A)	(A)	(A)	(A)	(A)	(A)
	OHL output shaft **(B)**	3170	**3170**	3170	3170	**3170**	3170	3170	**3170**	3170	3170	**3170**	3170
	Output RPM	4.01	**2.03**	1.35	4.01	**2.03**	1.35	4.01	**2.03**	1.35	–	**–**	–
	Input Hp (max) **(C)**	0.45	**0.23**	0.15	0.45	**0.23**	0.15	0.45	**0.23**	0.15	–	**–**	–
860.65	Output torque, in-lb	7081	**7081**	7081	7081	**7081**	7081	7081	**7081**	7081	–	**–**	–
	OHL input shaft	(A)	(A)	**(A)**	**(A)**	**(A)**	**(A)**	**(A)**	**(A)**	**(A)**	–	**–**	–
	OHL output shaft **(B)**	3091	**3170**	3170	3091	**3170**	3170	3091	**3170**	3170	–	**–**	–
	Output RPM	3.78	**1.92**	1.27	3.78	**1.92**	1.27	3.78	**1.92**	1.27	3.78	**1.92**	1.27
	Input Hp (max) **(C)**	0.42	**0.22**	0.14	0.42	**0.22**	0.14	0.42	**0.22**	0.14	0.42	**0.22**	0.14
912.66	Output torque, in-lb	7081	**7081**	7081	7081	**7081**	7081	7081	**7081**	7081	7081	**7081**	7081
	OHL input shaft	(A)	(A)	(A)	(A)	(A)	(A)	(A)	(A)	(A)	(A)	(A)	(A)
	OHL output shaft **(B)**	3170	**3170**	3170	3170	**3170**	3170	3170	**3170**	3170	3170	**3170**	3170
	Output RPM	3.71	**1.88**	1.25	3.71	**1.88**	1.25	3.71	**1.88**	1.25	3.71	**1.88**	1.25
	Input Hp (max) **(C)**	0.42	**0.21**	0.14	0.42	**0.21**	0.14	0.42	**0.21**	0.14	0.42	**0.21**	0.14
930.15	Output torque, in-lb	7081	**7081**	7081	7081	**7081**	7081	7081	**7081**	7081	7081	**7081**	7081
	OHL input shaft	(A)	(A)	(A)	(A)	(A)	(A)	(A)	(A)	(A)	(A)	(A)	(A)
	OHL output shaft **(B)**	3091	**3170**	3170	3091	**3170**	3170	3091	**3170**	3170	3091	**3170**	3170
	Output RPM	3.28	**1.66**	1.10	3.28	**1.66**	1.10	3.28	**1.66**	1.10	3.28	**1.66**	1.10
	Input Hp (max) **(C)**	0.37	**0.19**	0.12	0.37	**0.19**	0.12	0.37	**0.19**	0.12	0.37	**0.19**	0.12
1052.01	Output torque, in-lb	7081	**7081**	7081	7081	**7081**	7081	7081	**7081**	7081	7081	**7081**	7081
	OHL input shaft	(A)	(A)	(A)	(A)	(A)	(A)	(A)	(A)	(A)	(A)	(A)	(A)
	OHL output shaft **(B)**	3091	**3170**	3170	3091	**3170**	3170	3091	**3170**	3170	3091	**3170**	3170
	Output RPM	3.22	**1.63**	1.08	–	**–**	–	–	**–**	–	–	**–**	–
	Input Hp (max) **(C)**	0.36	**0.18**	0.12	–	**–**	–	–	**–**	–	–	**–**	–
1070.90	Output torque, in-lb	7081	**7081**	7081	–	**–**	–	–	**–**	–	–	**–**	–
	OHL input shaft	(A)	**(A)**	**(A)**	–	**–**	–	–	**–**	–	–	**–**	–
	OHL output shaft **(B)**	2765	**3170**	3170	–	**–**	–	–	**–**	–	–	**–**	–

Service factor: 1.0

(A) (B) (C) - See footnotes page on inside back cover

Blank areas (-) indicate configuration not available

ILH 68

Size: H_684

Four-stage reduction – Clamp collar, three-piece coupled, separate

NEMA motor frame		56C			—			140TC			180TC		
IEC motor frame		71D			80D			90D			100D		
Separate group		71			80			90			100		
Ratio	Output Rating data	3450	1750	1160	3450	1750	1160	3450	1750	1160	3450	1750	1160
	Output RPM	3.04	**1.54**	1.02	3.04	**1.54**	1.02	3.04	**1.54**	1.02	–	–	–
	Input Hp (max) **(C)**	0.34	**0.17**	0.11	0.34	**0.17**	0.11	0.34	**0.17**	0.11	–	–	–
1134.00	Output torque, in-lb	7081	**7081**	7081	7081	**7081**	7081	7081	**7081**	7081	–	–	–
	OHL input shaft	**(A)**	**(A)**	**(A)**	**(A)**	**(A)**	**(A)**	**(A)**	**(A)**	**(A)**	–	–	–
	OHL output shaft **(B)**	3091	**3170**	3170	3091	**3170**	3170	3091	**3170**	3170	–	–	–
	Output RPM	2.86	**1.45**	0.96	2.86	**1.45**	0.96	–	–	–	–	–	–
	Input Hp (max) **(C)**	0.32	**0.16**	0.11	0.32	**0.16**	0.11	–	–	–	–	–	–
1206.65	Output torque, in-lb	7081	**7081**	7081	7081	**7081**	7081	–	–	–	–	–	–
	OHL input shaft	(A)	**(A)**	**(A)**	**(A)**	**(A)**	**(A)**	–	–	–	–	–	–
	OHL output shaft **(B)**	3091	**3170**	3170	3091	**3170**	3170	–	–	–	–	–	–
	Output RPM	2.64	**1.34**	0.89	2.64	**1.34**	0.89	–	–	–	–	–	–
	Input Hp (max) **(C)**	0.30	**0.15**	0.10	0.30	**0.15**	0.10	–	–	–	–	–	–
1307.25	Output torque, in-lb	7081	**7081**	7081	7081	**7081**	7081	–	–	–	–	–	–
	OHL input shaft	**(A)**	**(A)**	**(A)**	**(A)**	**(A)**	**(A)**	–	–	–	–	–	–
	OHL output shaft **(B)**	3091	**3170**	3170	3091	**3170**	3170	–	–	–	–	–	–
	Output RPM	2.52	**1.28**	0.85	2.52	**1.28**	0.85	2.52	**1.28**	0.85	–	–	–
	Input Hp (max) **(C)**	0.28	**0.14**	0.10	0.28	**0.14**	0.10	0.28	**0.14**	0.10	–	–	–
1366.80	Output torque, in-lb	7081	**7081**	7081	7081	**7081**	7081	7081	**7081**	7081	–	–	–
	OHL input shaft	(A)	(A)	(A)	(A)	(A)	(A)	(A)	(A)	(A)	–	–	–
	OHL output shaft **(B)**	3091	**3170**	3170	3091	**3170**	3170	3091	**3170**	3170	–	–	–
	Output RPM	2.39	**1.21**	0.80	2.39	**1.21**	0.80	–	–	–	–	–	–
	Input Hp (max) **(C)**	0.27	**0.14**	0.09	0.27	**0.14**	0.09	–	–	–	–	–	–
1444.86	Output torque, in-lb	7081	**7081**	7081	7081	**7081**	7081	–	–	–	–	–	–
	OHL input shaft	(A)	(A)	(A)	**(A)**	**(A)**	**(A)**	–	–	–	–	–	–
	OHL output shaft **(B)**	3091	**3170**	3170	3091	**3170**	3170	–	–	–	–	–	–
	Output RPM	2.27	**1.15**	0.76	2.27	**1.15**	0.76	2.27	**1.15**	0.76	–	–	–
	Input Hp (max) **(C)**	0.25	**0.13**	0.09	0.25	**0.13**	0.09	0.25	**0.13**	0.09	–	–	–
1521.45	Output torque, in-lb	7081	**7081**	7081	7081	**7081**	7081	7081	**7081**	7081	–	–	–
	OHL input shaft	**(A)**	**(A)**	**(A)**	**(A)**	**(A)**	**(A)**	**(A)**	**(A)**	**(A)**	–	–	–
	OHL output shaft **(B)**	3170	**3170**	3170	3170	**3170**	3170	3170	**3170**	3170	–	–	–
	Output RPM	2.12	**1.08**	0.71	–	–	–	–	–	–	–	–	–
	Input Hp (max) **(C)**	0.24	**0.12**	0.08	–	–	–	–	–	–	–	–	–
1624.17	Output torque, in-lb	7081	**7081**	7081	–	–	–	–	–	–	–	–	–
	OHL input shaft	**(A)**	**(A)**	**(A)**	–	–	–	–	–	–	–	–	–
	OHL output shaft **(B)**	3091	**3170**	3170	–	–	–	–	–	–	–	–	–
	Output RPM	1.67	**0.85**	0.56	1.67	**0.85**	0.56	–	–	–	–	–	–
	Input Hp (max) **(C)**	0.19	**0.10**	0.06	0.19	**0.10**	0.06	–	–	–	–	–	–
2064.04	Output torque, in-lb	7081	**7081**	7081	7081	**7081**	7081	–	–	–	–	–	–
	OHL input shaft	(A)	(A)	(A)	(A)	(A)	**(A)**	–	–	–	–	–	–
	OHL output shaft **(B)**	3170	**3170**	3170	3170	**3170**	3170	–	–	–	–	–	–
	Output RPM	1.64	**0.83**	0.55	–	–	–	–	–	–	–	–	–
	Input Hp (max) **(C)**	0.18	**0.09**	0.06	–	–	–	–	–	–	–	–	–
2109.23	Output torque, in-lb	7081	**7081**	7081	–	–	–	–	–	–	–	–	–
	OHL input shaft	**(A)**	**(A)**	**(A)**	–	–	–	–	–	–	–	–	–
	OHL output shaft **(B)**	3170	**3170**	3170	–	–	–	–	–	–	–	–	–
	Output RPM	1.49	**0.75**	0.50	–	–	–	–	–	–	–	–	–
	Input Hp (max) **(C)**	0.17	**0.08**	0.06	–	–	–	–	–	–	–	–	–
2320.18	Output torque, in-lb	7081	**7081**	7081	–	–	–	–	–	–	–	–	–
	OHL input shaft	**(A)**	**(A)**	**(A)**	–	–	–	–	–	–	–	–	–
	OHL output shaft **(B)**	3170	**3170**	3170	–	–	–	–	–	–	–	–	–

Service factor: 1.0

(A) (B) (C) - See footnotes page on inside back cover

Blank areas (-) indicate configuration not available

ILH 68

Size: H_685

Five-stage reduction – Clamp collar, three-piece coupled, separate

NEMA motor frame		56C			—			140TC			180TC		
IEC motor frame		71D			80D			90D			100D		
Separate group		71			80			90			100		
Ratio	Output Rating data	3450	1750	1160	3450	1750	1160	3450	1750	1160	3450	1750	1160
	Output RPM	2.01	**1.02**	0.68	2.01	**1.02**	0.68	2.01	**1.02**	0.68	2.01	**1.02**	0.68
	Input Hp (max) **(C)**	0.23	**0.11**	0.08	0.23	**0.11**	0.08	0.23	**0.11**	0.08	0.23	**0.11**	0.08
1718.39	Output torque, in-lb	7081	**7081**	7081	7081	**7081**	7081	7081	**7081**	7081	7081	**7081**	7081
	OHL input shaft	(A)	(A)	(A)	(A)	(A)	(A)	(A)	(A)	(A)	(A)	(A)	(A)
	OHL output shaft **(B)**	3091	**3170**	3170	3091	**3170**	3170	3091	**3170**	3170	3091	**3170**	3170
	Output RPM	1.87	**0.95**	0.63	1.87	**0.95**	0.63	1.87	**0.95**	0.63	1.87	**0.95**	0.63
	Input Hp (max) **(C)**	0.21	**0.11**	0.07	0.21	**0.11**	0.07	0.21	**0.11**	0.07	0.21	**0.11**	0.07
1840.03	Output torque, in-lb	7081	**7081**	7081	7081	**7081**	7081	7081	**7081**	7081	7081	**7081**	7081
	OHL input shaft	(A)	(A)	(A)	(A)	(A)	(A)	(A)	(A)	(A)	(A)	(A)	(A)
	OHL output shaft **(B)**	3091	**3170**	3170	3091	**3170**	3170	3091	**3170**	3170	3091	**3170**	3170
	Output RPM	1.74	**0.88**	0.59	1.74	**0.88**	0.59	1.74	**0.88**	0.59	1.74	**0.88**	0.59
	Input Hp (max) **(C)**	0.20	**0.10**	0.07	0.20	**0.10**	0.07	0.20	**0.10**	0.07	0.20	**0.10**	0.07
1978.11	Output torque, in-lb	7081	**7081**	7081	7081	**7081**	7081	7081	**7081**	7081	7081	**7081**	7081
	OHL input shaft	(A)	(A)	(A)	(A)	(A)	(A)	(A)	(A)	(A)	(A)	(A)	(A)
	OHL output shaft **(B)**	3170	**3170**	3170	3170	**3170**	3170	3170	**3170**	3170	3170	**3170**	3170
	Output RPM	1.40	**0.71**	0.47	1.40	**0.71**	0.47	1.40	**0.71**	0.47	1.40	**0.71**	0.47
	Input Hp (max) **(C)**	0.16	**0.08**	0.05	0.16	**0.08**	0.05	0.16	**0.08**	0.05	0.16	**0.08**	0.05
2463.30	Output torque, in-lb	7081	**7081**	7081	7081	**7081**	7081	7081	**7081**	7081	7081	**7081**	7081
	OHL input shaft	(A)	(A)	(A)	(A)	(A)	(A)	(A)	(A)	(A)	(A)	(A)	(A)
	OHL output shaft **(B)**	3091	**3170**	3170	3091	**3170**	3170	3091	**3170**	3170	3091	**3170**	3170
	Output RPM	1.29	**0.65**	0.43	1.29	**0.65**	0.43	1.29	**0.65**	0.43	1.29	**0.65**	0.43
	Input Hp (max) **(C)**	0.15	**0.07**	0.05	0.15	**0.07**	0.05	0.15	**0.07**	0.05	0.15	**0.07**	0.05
2672.15	Output torque, in-lb	7081	**7081**	7081	7081	**7081**	7081	7081	**7081**	7081	7081	**7081**	7081
	OHL input shaft	(A)	(A)	(A)	(A)	(A)	(A)	(A)	(A)	(A)	(A)	(A)	(A)
	OHL output shaft **(B)**	3170	**3170**	3170	3170	**3170**	3170	3170	**3170**	3170	3170	**3170**	3170
	Output RPM	1.20	**0.61**	0.40	1.20	**0.61**	0.40	1.20	**0.61**	0.40	1.20	**0.61**	0.40
	Input Hp (max) **(C)**	0.13	**0.07**	0.05	0.13	**0.07**	0.05	0.13	**0.07**	0.05	0.13	**0.07**	0.05
2879.82	Output torque, in-lb	7081	**7081**	7081	7081	**7081**	7081	7081	**7081**	7081	7081	**7081**	7081
	OHL input shaft	(A)	(A)	(A)	(A)	(A)	(A)	(A)	(A)	(A)	(A)	(A)	(A)
	OHL output shaft **(B)**	3091	**3170**	3170	3091	**3170**	3170	3091	**3170**	3170	3091	**3170**	3170
	Output RPM	1.12	**0.57**	0.38	1.12	**0.57**	0.38	1.12	**0.57**	0.38	1.12	**0.57**	0.38
	Input Hp (max) **(C)**	0.13	**0.06**	0.04	0.13	**0.06**	0.04	0.13	**0.06**	0.04	0.13	**0.06**	0.04
3093.30	Output torque, in-lb	7081	**7081**	7081	7081	**7081**	7081	7081	**7081**	7081	7081	**7081**	7081
	OHL input shaft	(A)	(A)	(A)	(A)	(A)	(A)	(A)	(A)	(A)	(A)	(A)	(A)
	OHL output shaft **(B)**	3091	**3170**	3170	3091	**3170**	3170	3091	**3170**	3170	3091	**3170**	3170
	Output RPM	1.10	**0.56**	0.37	1.10	**0.56**	0.37	1.10	**0.56**	0.37	1.10	**0.56**	0.37
	Input Hp (max) **(C)**	0.12	**0.06**	0.04	0.12	**0.06**	0.04	0.12	**0.06**	0.04	0.12	**0.06**	0.04
3150.38	Output torque, in-lb	7081	**7081**	7081	7081	**7081**	7081	7081	**7081**	7081	7081	**7081**	7081
	OHL input shaft	(A)	(A)	(A)	(A)	(A)	(A)	(A)	(A)	(A)	(A)	(A)	(A)
	OHL output shaft **(B)**	3091	**3170**	3170	3091	**3170**	3170	3091	**3170**	3170	3091	**3170**	3170
	Output RPM	0.98	**0.50**	0.33	0.98	**0.50**	0.33	0.98	**0.50**	0.33	0.98	**0.50**	0.33
	Input Hp (max) **(C)**	0.11	**0.06**	0.04	0.11	**0.06**	0.04	0.11	**0.06**	0.04	0.11	**0.06**	0.04
3526.28	Output torque, in-lb	7081	**7081**	7081	7081	**7081**	7081	7081	**7081**	7081	7081	**7081**	7081
	OHL input shaft	(A)	(A)	(A)	(A)	(A)	(A)	(A)	(A)	(A)	(A)	(A)	(A)
	OHL output shaft **(B)**	3170	**3170**	3170	3170	**3170**	3170	3170	**3170**	3170	3170	**3170**	3170
	Output RPM	0.86	**0.44**	0.29	0.86	**0.44**	0.29	0.86	**0.44**	0.29	0.86	**0.44**	0.29
	Input Hp (max) **(C)**	0.10	**0.05**	0.03	0.10	**0.05**	0.03	0.10	**0.05**	0.03	0.10	**0.05**	0.03
3988.69	Output torque, in-lb	7081	**7081**	7081	7081	**7081**	7081	7081	**7081**	7081	7081	**7081**	7081
	OHL input shaft	(A)	(A)	(A)	(A)	(A)	(A)	(A)	(A)	(A)	(A)	(A)	(A)
	OHL output shaft **(B)**	3091	**3170**	3170	3091	**3170**	3170	3091	**3170**	3170	3091	**3170**	3170
	Output RPM	0.78	**0.39**	0.26	0.78	**0.39**	0.26	0.78	**0.39**	0.26	0.78	**0.39**	0.26
	Input Hp (max) **(C)**	0.09	**0.04**	0.03	0.09	**0.04**	0.03	0.09	**0.04**	0.03	0.09	**0.04**	0.03
4440.01	Output torque, in-lb	7081	**7081**	7081	7081	**7081**	7081	7081	**7081**	7081	7081	**7081**	7081
	OHL input shaft	(A)	(A)	(A)	(A)	(A)	(A)	(A)	(A)	(A)	(A)	(A)	(A)
	OHL output shaft **(B)**	3170	**3170**	3170	3170	**3170**	3170	3170	**3170**	3170	3170	**3170**	3170

Service factor: 1.0

(A) (B) (C) - See footnotes page on inside back cover

Blank areas (-) indicate configuration not available

ILH 68

Size: H_685

Five-stage reduction – Clamp collar, three-piece coupled, separate

NEMA motor frame		56C			—			140TC			180TC		
IEC motor frame		71D			80D			90D			100D		
Separate group		71			80			90			100		
Ratio	**Output Rating data**	**3450**	**1750**	**1160**	**3450**	**1750**	**1160**	**3450**	**1750**	**1160**	**3450**	**1750**	**1160**
	Output RPM	0.68	**0.35**	0.23	–	–	–	–	–	–	–	–	–
	Input Hp (max) **(C)**	0.08	**0.04**	0.03	–	–	–	–	–	–	–	–	–
5064.09	Output torque, in-lb	7081	**7081**	7081	–	–	–	–	–	–	–	–	–
	OHL input shaft	**(A)**	**(A)**	**(A)**	–	–	–	–	–	–	–	–	–
	OHL output shaft **(B)**	2765	**3170**	3170	–	–	–	–	–	–	–	–	–
	Output RPM	0.61	**0.31**	0.20	0.61	**0.31**	0.20	0.61	**0.31**	0.20	–	–	–
	Input Hp (max) **(C)**	0.07	**0.03**	0.02	0.07	**0.03**	0.02	0.07	**0.03**	0.02	–	–	–
5680.43	Output torque, in-lb	7081	**7081**	7081	7081	**7081**	7081	7081	**7081**	7081	–	–	–
	OHL input shaft	**(A)**	**(A)**	**(A)**	**(A)**	**(A)**	**(A)**	**(A)**	**(A)**	**(A)**	–	–	–
	OHL output shaft **(B)**	3091	**3170**	3170	3091	**3170**	3170	3091	**3170**	3170	–	–	–
	Output RPM	0.51	**0.26**	0.17	0.51	**0.26**	0.17	–	–	–	–	–	–
	Input Hp (max) **(C)**	0.06	**0.03**	0.02	0.06	**0.03**	0.02	–	–	–	–	–	–
6830.90	Output torque, in-lb	7081	**7081**	7081	7081	**7081**	7081	–	–	–	–	–	–
	OHL input shaft	**(A)**	**(A)**	**(A)**	**(A)**	**(A)**	**(A)**	–	–	–	–	–	–
	OHL output shaft **(B)**	3091	**3170**	3170	3091	**3170**	3170	–	–	–	–	–	–
	Output RPM	0.45	**0.23**	0.15	0.45	**0.23**	0.15	0.45	**0.23**	0.15	–	–	–
	Input Hp (max) **(C)**	0.05	**0.03**	0.02	0.05	**0.03**	0.02	0.05	**0.03**	0.02	–	–	–
7695.42	Output torque, in-lb	7081	**7081**	7081	7081	**7081**	7081	7081	**7081**	7081	–	–	–
	OHL input shaft	**(A)**	**(A)**	**(A)**	**(A)**	**(A)**	**(A)**	**(A)**	**(A)**	**(A)**	–	–	–
	OHL output shaft **(B)**	3170	**3170**	3170	3170	**3170**	3170	3170	**3170**	3170	–	–	–

Service factor: 1.0

(A) (B) (C) - See footnotes page on inside back cover

Blank areas (-) indicate configuration not available

ILH 88

Size: H_881

Single reduction – Clamp collar, three-piece coupled, separate

NEMA motor frame		140TC			180TC			—			210TC			250TC		
IEC motor frame		90D			100D			112D			132D			160D		
Separate group		90			100			112			132			160		
Ratio	Output Rating Data	3450	1750	1160	3450	1750	1160	3450	1750	1160	3450	1750	1160	3450	1750	1160
	Output RPM	–	–	–	–	–	–	2018	**1021**	678	2018	**1021**	**678**	**2018**	**1021**	**678**
	Input Hp (max) **(C)**	–	–	–	–	–	–	27.34	**13.87**	9.19	49.46	**25.09**	**16.63**	**81.93**	**41.56**	**27.55**
1.71	Output torque, in-lb	–	–	–	–	–	–	854	**854**	854	1545	**1545**	**1545**	**2559**	**2559**	**2559**
	OHL input shaft	–	–	–	–	–	–	230	**230**	230	390	390	390	410	410	410
	OHL output shaft **(B)**	–	–	–	–	–	–	–	–	–	–	–	–	–	–	–
	Output RPM	–	–	–	1651	**837**	555	1651	**837**	555	1651	**837**	**555**	**1651**	**837**	**555**
	Input Hp (max) **(C)**	–	–	–	20.42	**10.36**	6.87	27.34	**13.87**	9.19	46.92	**23.80**	**15.78**	**76.71**	**38.91**	**25.79**
2.09	Output torque, in-lb	–	–	–	780	**780**	780	1044	**1044**	1044	1791	**1791**	**1791**	**2929**	**2929**	**2929**
	OHL input shaft	–	–	–	190	**190**	190	230	**230**	230	390	**390**	**390**	**410**	**410**	**410**
	OHL output shaft **(B)**	–	–	–	–	–	–	–	–	–	–	–	–	–	–	–
	Output RPM	–	–	–	1408	**714**	473	1408	**714**	473	1408	**714**	**473**	**1408**	**714**	**473**
	Input Hp (max) **(C)**	–	–	–	20.42	**10.36**	6.87	27.34	**13.87**	9.19	44.51	**22.58**	**14.97**	**72.11**	**36.58**	**24.25**
2.45	Output torque, in-lb	–	–	–	914	**914**	914	1224	**1224**	1224	1992	**1992**	**1992**	**3228**	**3228**	**3228**
	OHL input shaft	–	–	–	190	**190**	190	230	**230**	230	390	**390**	**390**	**410**	**410**	**410**
	OHL output shaft **(B)**	–	–	–	460	**460**	460	460	**460**	460	460	**460**	**460**	460	460	460
	Output RPM	1198	**608**	403	1198	**608**	403	1198	**608**	403	1198	**608**	**403**	**1198**	**608**	**403**
	Input Hp (max) **(C)**	9.86	**5.00**	3.31	20.42	**10.36**	6.87	27.34	**13.87**	9.19	41.87	**21.24**	**14.08**	**67.36**	**34.17**	22.65
2.88	Output torque, in-lb	519	**519**	519	1075	**1075**	1075	1439	**1439**	1439	2203	**2203**	**2203**	**3544**	**3544**	**3544**
	OHL input shaft	140	**140**	140	190	**190**	190	230	**230**	230	390	**390**	**390**	**410**	**410**	**410**
	OHL output shaft **(B)**	487	**487**	487	487	**487**	487	487	**487**	487	487	**487**	487	487	487	487
	Output RPM	1045	**530**	352	1045	**530**	352	1045	**530**	352	1045	**530**	**352**	**1045**	**530**	352
	Input Hp (max) **(C)**	9.86	**5.00**	3.31	20.42	**10.36**	6.87	26.67	**13.53**	8.97	39.47	**20.02**	**13.27**	**63.38**	**32.15**	21.31
3.30	Output torque, in-lb	594	**594**	594	1231	**1231**	1231	1608	**1608**	1608	2379	**2379**	**2379**	**3821**	**3821**	**3821**
	OHL input shaft	140	**140**	140	190	**190**	190	230	**230**	230	390	**390**	**390**	**410**	**410**	**410**
	OHL output shaft **(B)**	617	**617**	617	617	**617**	617	617	**617**	617	617	617	617	617	617	617
	Output RPM	885	**449**	297	885	**449**	297	885	**449**	297	885	**449**	**297**	**885**	449	297
	Input Hp (max) **(C)**	9.86	**5.00**	3.31	20.15	**10.22**	6.77	24.94	**12.65**	8.39	36.53	**18.53**	**12.28**	**47.83**	**24.26**	**16.08**
3.90	Output torque, in-lb	702	**703**	702	1435	**1435**	1435	1777	**1777**	1777	2603	**2603**	**2603**	**3407**	**3407**	**3407**
	OHL input shaft	140	**140**	140	190	**190**	190	230	**230**	230	390	**390**	**390**	**410**	**410**	**410**
	OHL output shaft **(B)**	690	**690**	690	690	**690**	690	690	**690**	690	690	**690**	**690**	**690**	**690**	**690**
	Output RPM	816	**414**	274	816	**414**	274	816	**414**	274	816	**414**	**274**	816	414	274
	Input Hp (max) **(C)**	9.86	**5.00**	3.31	19.48	**9.88**	6.55	24.07	**12.21**	8.09	35.17	**17.84**	**11.83**	**45.84**	**23.25**	15.41
4.23	Output torque, in-lb	762	**762**	762	1505	**1505**	1505	1860	**1860**	1860	2718	**2718**	**2718**	**3542**	**3542**	**3542**
	OHL input shaft	140	**140**	140	190	**190**	190	230	**230**	230	390	**390**	**390**	**410**	**410**	**410**
	OHL output shaft **(B)**	783	**783**	783	783	**783**	783	783	**783**	783	783	**783**	**783**	**783**	**783**	**783**
	Output RPM	734	**372**	247	734	**372**	247	734	**372**	247	734	**372**	247	734	372	247
	Input Hp (max) **(C)**	9.56	**4.85**	3.21	18.59	**9.43**	6.25	22.91	**11.62**	7.70	33.46	**16.97**	**11.25**	**39.68**	**20.13**	**13.34**
4.70	Output torque, in-lb	821	**821**	821	1596	**1596**	1596	1967	**1967**	1967	2872	**2872**	**2872**	**3407**	**3407**	**3407**
	OHL input shaft	140	**140**	140	190	**190**	190	230	**230**	230	390	**390**	**390**	**410**	**410**	**410**
	OHL output shaft **(B)**	783	**783**	783	783	**783**	783	783	**783**	783	783	**783**	**783**	783	**783**	783
	Output RPM	675	**343**	227	675	**343**	227	675	**343**	227	675	343	227	675	343	227
	Input Hp (max) **(C)**	9.23	**4.68**	3.10	17.86	**9.06**	6.01	22.02	**11.17**	7.40	32.21	**16.34**	10.83	35.11	**17.81**	11.81
5.11	Output torque, in-lb	861	**861**	861	1667	**1667**	1667	2056	**2056**	2056	3007	**3007**	**3007**	**3278**	**3278**	**3278**
	OHL input shaft	140	**140**	140	190	**190**	190	230	**230**	230	390	**390**	390	410	**410**	410
	OHL output shaft **(B)**	1221	**1221**	1221	1221	**1221**	1221	1221	**1221**	1221	1221	**1221**	**1221**	**1221**	**1221**	1221
	Output RPM	611	**310**	205	611	**310**	205	611	**310**	205	611	**310**	**205**	**611**	**310**	**205**
	Input Hp (max) **(C)**	8.79	**4.46**	2.96	17.01	**8.63**	5.72	20.98	**10.64**	7.05	27.46	**13.93**	9.23	27.46	**13.93**	9.23
5.65	Output torque, in-lb	908	**908**	908	1756	**1756**	1756	2165	**2165**	2165	2834	**2834**	**2834**	**2834**	**2834**	2834
	OHL input shaft	140	**140**	140	190	**190**	190	230	**230**	230	390	**390**	**390**	**410**	**410**	410
	OHL output shaft **(B)**	1221	**1221**	1221	1221	**1221**	1221	1221	**1221**	1221	1221	**1221**	**1221**	**1221**	**1221**	**1221**
	Output RPM	596	**289**	191	596	**289**	191	596	**289**	191	596	**289**	**191**	**596**	**289**	**191**
	Input Hp (max) **(C)**	8.48	**4.30**	2.85	16.44	**8.34**	5.53	20.31	**10.30**	6.83	22.38	**11.35**	**7.52**	**22.38**	**11.35**	**7.52**
6.06	Output torque, in-lb	938	**938**	938	1820	**1820**	1820	2248	**2248**	2248	2477	**2477**	**2477**	**2477**	**2477**	**2477**
	OHL input shaft	140	**140**	140	190	**190**	190	230	**230**	230	390	**390**	**390**	**410**	410	410
	OHL output shaft **(B)**	1221	**1221**	1221	1221	**1221**	1221	1221	**1221**	1221	1221	**1221**	1221	1221	**1221**	1221

Service factor: 1.0

(A) (B) (C) - See footnotes page on inside back cover

Blank areas (-) indicate configuration not available

ILH 88

Size: H_881

Single reduction – Clamp collar, three-piece coupled, separate

NEMA motor frame		140TC			180TC			—			210TC			250TC		
IEC motor frame		90D			100D			112D			132D			160D		
Separate group		90			100			112			132			160		
Ratio	Output Rating Data	3450	1750	1160	3450	1750	1160	3450	1750	1160	3450	1750	1160	3450	1750	1160
	Output RPM	528	**268**	178	528	**268**	178	528	**268**	178	528	**268**	**178**	–	–	–
	Input Hp (max) **(C)**	8.14	**4.13**	2.74	15.83	**8.03**	5.32	19.64	**9.96**	6.60	22.24	**11.28**	**7.48**	–	–	–
6.53	Output torque, in-lb	971	**971**	971	1888	**1888**	1888	2342	**2342**	2342	2653	**2653**	**2653**	–	–	–
	OHL input shaft	140	**140**	140	190	**190**	190	230	**230**	230	390	**390**	**390**	–	–	–
	OHL output shaft **(B)**	1440	**1440**	1440	1440	**1440**	1440	1440	**1440**	1440	1440	**1440**	**1440**	–	–	–
	Output RPM	488	**247**	164	488	**247**	164	488	**247**	164	488	**247**	164	–	–	–
	Input Hp (max) **(C)**	7.81	**3.96**	2.62	15.26	**7.74**	5.13	19.00	**9.64**	6.39	19.87	**10.08**	**6.68**	–	–	–
7.07	Output torque, in-lb	1008	**1008**	1008	1971	**1971**	1971	2455	**2455**	2455	2567	**2567**	**2567**	–	–	–
	OHL input shaft	140	**140**	140	190	**190**	190	230	**230**	230	390	**390**	390	–	–	–
	OHL output shaft **(B)**	1440	**1440**	1440	1440	**1440**	1440	1440	**1440**	1440	1440	**1440**	**1440**	–	–	–
	Output RPM	449	**228**	151	449	**228**	151	449	**228**	151	449	**228**	**151**	–	–	–
	Input Hp (max) **(C)**	7.45	**3.78**	2.51	14.69	**7.45**	4.94	15.44	**7.83**	5.19	15.44	**7.83**	**5.19**	–	–	–
7.69	Output torque, in-lb	1047	**1047**	1047	2063	**2063**	2063	2169	**2169**	2169	2169	**2169**	**2169**	–	–	–
	OHL input shaft	140	**140**	140	190	**190**	190	230	**230**	230	390	**390**	**390**	–	–	–
	OHL output shaft **(B)**	1690	**1690**	1690	1690	**1690**	1690	1690	**1690**	1690	1690	**1690**	**1690**	–	–	–
	Output RPM	410	**208**	138	410	**208**	138	410	**208**	138	410	**208**	**138**	–	–	–
	Input Hp (max) **(C)**	7.08	**3.59**	2.38	14.10	**7.15**	4.74	14.10	**7.15**	4.74	14.10	**7.15**	4.74	–	–	–
8.42	Output torque, in-lb	1089	**1089**	1089	2168	**2168**	2168	2168	**2168**	2168	2168	**2168**	**2168**	–	–	–
	OHL input shaft	140	**140**	140	190	**190**	190	230	**230**	230	990	**390**	**990**	–	–	–
	OHL output shaft **(B)**	1690	**1690**	1690	1690	**1690**	1690	1690	**1690**	1690	1690	**1690**	**1690**	–	–	–
	Output RPM	365	**185**	123	365	**185**	123	365	**185**	123	–	–	–	–	–	–
	Input Hp (max) **(C)**	6.64	**3.37**	2.23	10.74	**5.45**	3.61	10.74	**5.45**	3.61	–	–	–	–	–	–
9.46	Output torque, in-lb	1148	**1148**	1148	1857	**1857**	1857	1857	**1857**	1857	–	–	–	–	–	–
	OHL input shaft	140	**140**	140	190	**190**	190	230	**230**	230	–	–	–	–	–	–
	OHL output shaft **(B)**	1690	**1690**	1690	1690	**1690**	1690	1690	**1690**	1690	–	–	–	–	–	–
	Output RPM	334	**169**	112	334	**169**	112	334	**169**	112	–	–	–	–	–	–
	Input Hp (max) **(C)**	6.33	**3.21**	2.13	10.78	**5.47**	3.63	10.78	**5.47**	3.63	–	–	–	–	–	–
10.33	Output torque, in-lb	1194	**1194**	1194	2035	**2035**	2035	2035	**2035**	2035	–	–	–	–	–	–
	OHL input shaft	140	**140**	140	190	**190**	190	230	**230**	230	–	–	–	–	–	–
	OHL output shaft **(B)**	1882	**1882**	1882	1882	**1882**	1882	1882	**1882**	1882	–	–	–	–	–	–

Service factor: 1.0

(A) (B) (C) - See footnotes page on inside back cover

Blank areas (-) indicate configuration not available

ILH 88

Size: H_882

Double reduction – Clamp collar, three-piece coupled, separate

NEMA motor frame		140TC			180TC			—			210TC			250TC					280TC
IEC motor frame		90D			100D			112D			132D			160D					—
Separate group		90			100			112			132			160					—
Ratio	Output Rating data	3450	1750	1160	3450	1750	1160	3450	1750	1160	3450	1750	1160	3450	1750	1160	3450	1750	1160
	Output RPM	–	–	–	–	–	–	708	**359**	238	708	**359**	238	708	**359**	238	708	**359**	238
	Input Hp (max) **(C)**	–	–	–	–	–	–	27.33	**13.86**	9.19	56.18	**30.17**	20.32	89.61	**45.45**	30.13	89.61	**45.45**	30.13
4.87	Output torque, in-lb	–	–	–	–	–	–	2432	**2432**	2432	4998	**5292**	5375	7972	**7972**	7972	7972	**7972**	7972
	OHL input shaft	–	–	–	–	–	–	**(A)**	**838**	872	**(A)**	**946**	985	**(A)**	**1378**	1582	(A)	**1378**	1582
	OHL output shaft **(B)**	–	–	–	–	–	–	**(A)**	**2656**	2252	**(A)**	**2656**	2252	**(A)**	**2656**	2252	(A)	**2656**	2252
	Output RPM	–	–	–	581	**295**	195	581	**295**	195	581	**295**	195	581	**295**	195	581	**295**	195
	Input Hp (max) **(C)**	–	–	–	20.41	**10.35**	6.86	27.33	**13.86**	9.19	53.26	**28.61**	19.26	87.06	**45.45**	30.13	87.06	**45.45**	30.13
5.94	Output torque, in-lb	–	–	–	2215	**2215**	2215	2966	**2966**	2966	5779	**6121**	6217	9447	**9723**	9723	9447	**9723**	9723
	OHL input shaft	–	–	–	**(A)**	**713**	742	**(A)**	**843**	877	**(A)**	**952**	990	**(A)**	**1319**	1587	(A)	**1319**	1587
	OHL output shaft **(B)**	–	–	–	**(A)**	**2656**	2252	**(A)**	**2656**	2252	**(A)**	**2656**	2252	**(A)**	**2656**	2252	(A)	**2656**	2252
	Output RPM	–	–	–	496	**251**	167	496	**251**	167	496	**251**	167	496	**251**	167	496	**251**	167
	Input Hp (max) **(C)**	–	–	–	20.41	**10.35**	6.86	27.33	**13.86**	9.19	50.55	**27.15**	18.29	77.40	**44.49**	29.49	77.40	**44.49**	29.49
6.96	Output torque, in-lb	–	–	–	2595	**2595**	2595	3475	**3475**	3475	6427	**6806**	6915	9841	**11152**	11152	9841	**11152**	11152
	OHL input shaft	–	–	–	**(A)**	**713**	742	**(A)**	**843**	877	**(A)**	**952**	991	**(A)**	**1256**	1548	(A)	**1256**	1548
	OHL output shaft **(B)**	–	–	–	**(A)**	**2656**	2252	**(A)**	**2656**	2252	**(A)**	**2656**	2252	**(A)**	**2656**	2252	(A)	**2656**	2252
	Output RPM	–	–	–	–	–	–	455	**231**	153	455	**231**	153	455	**231**	153	455	**231**	153
	Input Hp (max) **(C)**	–	–	–	–	–	–	27.35	**13.87**	9.19	56.21	**30.18**	20.33	64.76	**43.15**	30.14	64.76	**43.15**	30.14
7.59	Output torque, in-lb	–	–	–	–	–	–	3792	**3792**	3792	7794	**8251**	8382	8979	**11796**	12431	8979	**11796**	12431
	OHL input shaft	–	–	–	–	–	–	**(A)**	**838**	872	**(A)**	**946**	985	**(A)**	**1403**	1582	(A)	**1403**	1582
	OHL output shaft **(B)**	–	–	–	–	–	–	**(A)**	**2252**	2954	**(A)**	**2252**	2954	**(A)**	**2252**	2954	(A)	**2252**	2954
	Output RPM	–	–	–	373	**189**	125	373	**189**	125	373	**189**	125	373	**189**	125	373	**189**	125
	Input Hp (max) **(C)**	–	–	–	20.42	**10.36**	6.86	27.34	**13.87**	9.19	53.27	**28.62**	19.27	56.08	**37.37**	26.21	56.08	**37.37**	26.21
9.26	Output torque, in-lb	–	–	–	3454	**3454**	3454	4625	**4625**	4625	9011	**9544**	9694	9486	**12464**	13185	9486	**12464**	13185
	OHL input shaft	–	–	–	**(A)**	**713**	742	**(A)**	**843**	877	**(A)**	**952**	991	**(A)**	**1418**	1587	(A)	**1418**	1587
	OHL output shaft **(B)**	–	–	–	2656	**2252**	2954	2656	**2252**	2954	2656	**2252**	2954	2656	**2252**	2954	2656	**2252**	2954
	Output RPM	–	–	–	318	**161**	107	318	**161**	107	318	**161**	107	318	**161**	107	318	**161**	107
	Input Hp (max) **(C)**	–	–	–	20.42	**10.36**	6.87	27.34	**13.87**	9.19	50.28	**27.16**	18.29	50.28	**33.51**	23.50	50.28	**33.51**	23.50
10.85	Output torque, in-lb	–	–	–	4047	**4047**	4047	5419	**5419**	5419	9966	**10613**	10784	9966	**13095**	13852	9966	**13095**	13852
	OHL input shaft	–	–	–	**(A)**	**711**	741	**(A)**	**843**	877	**(A)**	**952**	991	**(A)**	**1420**	1577	(A)	**1420**	1577
	OHL output shaft **(B)**	–	–	–	2656	**2252**	2954	2656	**2252**	2954	2656	**2252**	2954	2656	**2252**	2954	2656	**2252**	2954
	Output RPM	271	**137**	91	271	**137**	91	271	**137**	91	271	**137**	91	271	**137**	91	271	**137**	91
	Input Hp (max) **(C)**	9.87	**5.00**	3.32	20.42	**10.36**	6.87	27.35	**13.87**	9.20	45.20	**25.55**	17.21	45.20	**30.13**	21.12	45.20	**30.13**	21.12
12.75	Output torque, in-lb	2298	**2298**	2298	4757	**4757**	4757	6370	**6370**	6370	10529	**11734**	11924	10529	**13834**	14631	10529	**13834**	14631
	OHL input shaft	**(A)**	**453**	471	**(A)**	**709**	738	**(A)**	**841**	876	**(A)**	**950**	989	**(A)**	**1419**	1580	(A)	**1419**	1580
	OHL output shaft **(B)**	2656	**2954**	3437	2656	**2954**	3437	2656	**2954**	3437	2656	**2954**	3437	2656	**2954**	3437	2656	**2954**	3437
	Output RPM	236	**120**	79	236	**120**	79	236	**120**	79	236	**120**	79	236	**120**	79	236	**120**	79
	Input Hp (max) **(C)**	9.87	**5.00**	3.32	20.42	**10.36**	6.87	27.35	**13.87**	9.19	41.40	**24.09**	16.22	41.40	**27.60**	18.71	41.40	**27.60**	18.71
14.63	Output torque, in-lb	2637	**2637**	2637	5458	**5458**	5458	7309	**7309**	7309	11064	**12691**	12895	11064	**14540**	14870	11064	**14540**	14870
	OHL input shaft	**(A)**	**454**	473	**(A)**	**710**	740	**(A)**	**838**	873	**(A)**	**948**	987	**(A)**	**1416**	1586	(A)	**1416**	1586
	OHL output shaft **(B)**	2252	**2954**	3437	2252	**2954**	3437	2252	**2954**	3437	2252	**2954**	3437	2252	**2954**	3437	2252	**2954**	3437
	Output RPM	200	**101**	67	200	**101**	67	200	**101**	67	200	**101**	67	200	**101**	67	–	–	–
	Input Hp (max) **(C)**	9.86	**5.00**	3.32	20.42	**10.36**	6.87	27.34	**13.87**	9.19	37.25	**22.29**	15.01	37.25	**23.91**	15.85	–	–	–
17.27	Output torque, in-lb	3112	**3112**	3112	6442	**6442**	6442	8626	**8626**	8626	11752	**13865**	14087	11752	**14870**	14870	–	–	–
	OHL input shaft	**(A)**	**452**	470	**(A)**	**707**	737	**(A)**	**839**	874	**(A)**	**946**	985	**(A)**	**1426**	1591	–	–	–
	OHL output shaft **(B)**	2252	**2954**	3437	2252	**2954**	3437	2252	**2954**	3437	2252	**2954**	3437	2252	**2954**	3437	–	–	–
	Output RPM	184	**93**	62	184	**93**	62	184	**93**	62	184	**93**	62	184	**93**	62	–	–	–
	Input Hp (max) **(C)**	9.86	**5.00**	3.32	20.42	**10.36**	6.87	27.34	**13.87**	9.19	34.92	**21.46**	14.45	34.92	**22.06**	14.62	–	–	–
18.72	Output torque, in-lb	3373	**3373**	3373	6983	**6983**	6983	9350	**9350**	9350	11941	**14468**	14701	11942	**14870**	14870	–	–	–
	OHL input shaft	**(A)**	**456**	474	**(A)**	**638**	741	**(A)**	**757**	872	**(A)**	**956**	995	**(A)**	**1437**	1593	–	–	–
	OHL output shaft **(B)**	2252	**3437**	3437	2252	**3437**	3437	2252	**3437**	3437	2252	**3437**	3437	2252	**3437**	3437	–	–	–
	Output RPM	166	**84**	56	166	**84**	56	166	**84**	56	166	**84**	56	166	**84**	56	–	–	–
	Input Hp (max) **(C)**	9.86	**5.00**	3.32	20.42	**10.36**	6.87	26.04	**13.87**	9.19	32.10	**19.84**	13.15	32.10	**19.84**	13.15	–	–	–
20.81	Output torque, in-lb	3750	**3750**	3750	7764	**7764**	7764	9899	**10396**	10396	12202	**14870**	14869	12202	**14870**	14870	–	–	–
	OHL input shaft	**(A)**	**456**	474	**(A)**	**522**	739	**(A)**	**587**	876	**(A)**	**956**	987	**(A)**	**1447**	1594	–	–	–
	OHL output shaft **(B)**	2252	**3437**	4471	2252	**3437**	4471	2252	**3437**	4471	2252	**3437**	4471	2252	**3437**	4471	–	–	–

Service factor: 1.0

(A) (B) (C) - See footnotes page on inside back cover

Blank areas (-) indicate configuration not available

ILH 88

Size: H_882

Single reduction – Clamp collar, three-piece coupled, separate

NEMA motor frame		140TC			180TC			—			210TC			250TC					280TC
IEC motor frame		90D			100D			112D			132D			160D					—
Separate group		90			100			112			132			160					—
Ratio	Output Rating data	3450	1750	1160	3450	1750	1160	3450	1750	1160	3450	1750	1160	3450	1750	1160	3450	1750	1160
	Output RPM	153	**77**	51	153	**77**	51	153	**77**	51	153	**77**	51	153	**77**	51	–	–	–
	Input Hp (max) **(C)**	9.86	**5.00**	3.32	20.14	**10.36**	6.86	25.02	**13.39**	9.04	30.07	**18.26**	12.10	30.07	**18.26**	12.10	–	–	–
22.61	Output torque, in-lb	4074	**4074**	4074	8319	**8433**	8433	10333	**10901**	11110	12421	**14870**	14869	12422	**14870**	14870	–	–	–
	OHL input shaft	**(A)**	**455**	474	**(A)**	**408**	709	**(A)**	**519**	874	**(A)**	**949**	989	**(A)**	**1454**	1595	–	–	–
	OHL output shaft **(B)**	2954	**3437**	4471	2954	**3437**	4471	2954	**3437**	4471	2954	**3437**	4471	2954	**3437**	4471	–	–	–
	Output RPM	138	**70**	46	138	**70**	46	138	**70**	46	138	**70**	46	138	**70**	46	–	–	–
	Input Hp (max) **(C)**	9.86	**5.00**	3.32	18.62	**10.13**	6.86	23.65	**12.75**	8.62	27.80	**16.51**	10.94	27.80	**16.51**	10.94	–	–	–
25.01	Output torque, in-lb	4506	**4506**	4506	8507	**9122**	9328	10803	**11487**	11707	12700	**14870**	14869	12700	**14870**	14870	–	–	–
	OHL input shaft	**(A)**	**454**	473	**(A)**	**402**	674	**(A)**	**444**	795	**(A)**	**951**	987	**(A)**	**1462**	1596	–	–	–
	OHL output shaft **(B)**	2954	**3437**	4471	2954	**3437**	4471	2954	**3437**	4471	2954	**3437**	4471	2954	**3437**	4471	–	–	–
	Output RPM	128	**65**	43	128	**65**	43	128	**65**	43	128	**65**	43	128	**65**	43	–	–	–
	Input Hp (max) **(C)**	9.63	**5.00**	3.32	17.60	**9.57**	6.58	22.28	**12.35**	8.34	26.29	**15.38**	10.19	26.29	**15.38**	10.19	–	–	–
26.85	Output torque, in-lb	4725	**4838**	4837	8631	**9257**	9606	10931	**11940**	12169	12896	**14870**	14869	12897	**14870**	14870	–	–	–
	OHL input shaft	**(A)**	**453**	472	**(A)**	**396**	666	**(A)**	**381**	733	**(A)**	**948**	989	**(A)**	**1467**	1596	–	–	–
	OHL output shaft **(B)**	2954	**3437**	4471	2954	**3437**	4471	2954	**3437**	4471	2954	**3437**	4471	2954	**3437**	4471	–	–	–
	Output RPM	119	**60**	40	119	**60**	40	119	**60**	40	119	**60**	40	–	–	–	–	–	–
	Input Hp (max) **(C)**	9.26	**4.83**	3.32	16.57	**9.01**	6.20	20.93	**11.94**	8.06	24.84	**14.27**	9.46	–	–	–	–	–	–
28.93	Output torque, in-lb	4894	**5036**	5213	8756	**9391**	9743	11060	**12438**	12677	13127	**14870**	14869	–	–	–	–	–	–
	OHL input shaft	**(A)**	**452**	470	**(A)**	**391**	660	**(A)**	**312**	664	**(A)**	**951**	991	–	–	–	–	–	–
	OHL output shaft **(B)**	2954	**4471**	4856	2954	**4471**	4856	2954	**4471**	4856	2954	**4471**	4856	–	–	–	–	–	–
	Output RPM	110	**56**	37	110	**56**	37	110	**56**	37	110	**56**	37	–	–	–	–	–	–
	Input Hp (max) **(C)**	8.87	**4.63**	3.20	15.52	**8.45**	5.81	19.55	**11.55**	7.80	23.37	**13.18**	8.74	–	–	–	–	–	–
31.32	Output torque, in-lb	5073	**5221**	5443	8882	**9526**	9882	11183	**13027**	13277	13370	**14870**	14869	–	–	–	–	–	–
	OHL input shaft	**(A)**	**452**	472	**(A)**	**385**	653	**(A)**	**227**	577	**(A)**	**953**	992	–	–	–	–	–	–
	OHL output shaft **(B)**	2954	**4471**	4856	2954	**4471**	4856	2954	**4471**	4856	2954	**4471**	4856	–	–	–	–	–	–
	Output RPM	101	**51**	34	101	**51**	34	101	**51**	34	101	**51**	34	–	–	–	–	–	–
	Input Hp (max) **(C)**	8.46	**4.42**	3.05	14.47	**7.87**	5.42	18.17	**10.96**	7.55	21.92	**12.12**	8.03	–	–	–	–	–	–
34.07	Output torque, in-lb	5267	**5421**	5651	9007	**9661**	10025	11310	**13450**	13974	13640	**14870**	14869	–	–	–	–	–	–
	OHL input shaft	**(A)**	**454**	472	**(A)**	**379**	650	**(A)**	**176**	474	**(A)**	**954**	994	–	–	–	–	–	–
	OHL output shaft **(B)**	2954	**4471**	4856	2954	**4471**	4856	2954	**4471**	4856	2954	**4471**	4856	–	–	–	–	–	–
	Output RPM	93	**47**	31	93	**47**	31	93	**47**	31	93	**47**	31	–	–	–	–	–	–
	Input Hp (max) **(C)**	8.05	**4.20**	2.90	13.42	**7.30**	5.02	16.80	**10.16**	6.99	18.13	**11.08**	6.75	–	–	–	–	–	–
37.27	Output torque, in-lb	5479	**5640**	5880	9134	**9800**	10168	11435	**13638**	14147	12341	**14870**	13671	–	–	–	–	–	–
	OHL input shaft	**(A)**	**454**	471	**(A)**	**373**	643	**(A)**	**168**	469	**(A)**	**955**	997	–	–	–	–	–	–
	OHL output shaft **(B)**	3437	**4471**	4856	3437	**4471**	4856	3437	**4471**	4856	3437	**4471**	4856	–	–	–	–	–	–
	Output RPM	82	**42**	28	82	**42**	28	82	**42**	28	–	–	–	–	–	–	–	–	–
	Input Hp (max) **(C)**	7.54	**3.94**	2.72	12.13	**6.60**	4.54	15.14	**9.19**	5.83	–	–	–	–	–	–	–	–	–
41.90	Output torque, in-lb	5771	**5941**	6195	9286	**9964**	10336	11589	**13862**	13268	–	–	–	–	–	–	–	–	–
	OHL input shaft	**(A)**	**453**	471	**(A)**	**369**	641	**(A)**	**160**	665	–	–	–	–	–	–	–	–	–
	OHL output shaft **(B)**	3437	**4471**	4856	3437	**4471**	4856	3437	**4471**	4856	–	–	–	–	–	–	–	–	–
	Output RPM	75	**38**	25	75	**38**	25	75	**38**	25	–	–	–	–	–	–	–	–	–
	Input Hp (max) **(C)**	7.19	**3.75**	2.59	11.24	**6.11**	4.20	13.99	**8.50**	4.35	–	–	–	–	–	–	–	–	–
45.76	Output torque, in-lb	6009	**6187**	6448	9392	**10074**	10454	11695	**14015**	10819	–	–	–	–	–	–	–	–	–
	OHL input shaft	**(A)**	**453**	474	**(A)**	**364**	743	**(A)**	**157**	876	–	–	–	–	–	–	–	–	–
	OHL output shaft **(B)**	3437	**4856**	4856	3437	**4856**	4856	3437	**4856**	4856	–	–	–	–	–	–	–	–	–
	Output RPM	68	**34**	23	68	**34**	23	–	–	–	–	–	–	–	–	–	–	–	–
	Input Hp (max) **(C)**	6.75	**3.53**	2.44	9.01	**5.58**	3.35	–	–	–	–	–	–	–	–	–	–	–	–
50.73	Output torque, in-lb	6254	**6441**	6716	8352	**10198**	9230	–	–	–	–	–	–	–	–	–	–	–	–
	OHL input shaft	**(A)**	**456**	474	**(A)**	**(A)**	**(A)**	–	–	–	–	–	–	–	–	–	–	–	–
	OHL output shaft **(B)**	3437	**4856**	4856	3437	**4856**	4856	–	–	–	–	–	–	–	–	–	–	–	–

Service factor: 1.0

(A) (B) (C) - See footnotes page on inside back cover

Blank areas (-) indicate configuration not available

ILH 88

Size: H_883

Triple reduction – Clamp collar, three-piece coupled, separate

NEMA motor frame		56C			—			140TC			180TC			—			210TC		
IEC motor frame		71D			80D			90D			100D			112D			132D		
Separate group		71			80			90			100			112			132		
Ratio	Output Rating Data	3450	1750	1160	3450	1750	1160	3450	1750	1160	3450	1750	1160	3450	1750	1160	3450	1750	1160
	Output RPM	–	–	–	–	–	–	–	–	–	101	**51**	34	101	**51**	34	101	**51**	34
	Input Hp (max) **(C)**	–	–	–	–	–	–	–	–	–	17.70	**10.36**	6.87	17.70	**12.09**	8.02	17.70	**12.09**	8.02
34.14	Output torque, in-lb	–	–	–	–	–	–	–	–	–	11041	**12734**	12734	11041	**14870**	14870	11041	**14870**	14870
	OHL input shaft	–	–	–	–	–	–	–	–	–	**(A)**	**713**	742	**(A)**	**839**	873	**(A)**	**958**	997
	OHL output shaft **(B)**	–	–	–	–	–	–	–	–	–	2954	**4471**	4856	2954	**4471**	4856	2954	**4471**	4856
	Output RPM	–	–	–	–	–	–	–	–	–	84	**42**	28	84	**42**	28	84	**42**	28
	Input Hp (max) **(C)**	–	–	–	–	–	–	–	–	–	15.47	**10.02**	6.64	15.47	**10.02**	6.64	15.47	**10.02**	6.64
41.19	Output torque, in-lb	–	–	–	–	–	–	–	–	–	11639	**14870**	14870	11639	**14870**	14870	11639	**14870**	14870
	OHL input shaft	–	–	–	–	–	–	–	–	–	**(A)**	**713**	742	**(A)**	**839**	873	**(A)**	**958**	997
	OHL output shaft **(B)**	–	–	–	–	–	–	–	–	–	3437	**4471**	4856	3437	**4471**	4856	3437	**4471**	4856
	Output RPM	–	–	–	70	**35**	23	70	**35**	23	70	**35**	23	70	**35**	23	70	**35**	23
	Input Hp (max) **(C)**	–	–	–	4.85	**2.46**	1.63	9.86	**5.00**	3.32	13.52	**8.35**	5.54	13.52	**8.35**	5.54	13.52	**8.35**	5.54
49.42	Output torque, in-lb	–	–	–	4374	**4374**	4374	8905	**8905**	8905	12204	**14870**	14870	12204	**14870**	14870	12204	**14870**	14870
	OHL input shaft	–	–	–	**(A)**	**346**	360	**(A)**	**454**	473	**(A)**	**714**	743	**(A)**	**839**	876	**(A)**	**959**	998
	OHL output shaft **(B)**	–	–	–	3437	**4856**	4856	3437	**4856**	4856	3437	**4856**	4856	3437	**4856**	4856	3437	**4856**	4856
	Output RPM	–	–	–	60	**30**	20	60	**30**	20	60	**30**	20	60	**30**	20	60	**30**	20
	Input Hp (max) **(C)**	–	–	–	4.85	**2.46**	1.63	9.86	**5.00**	3.32	12.04	**7.13**	4.72	12.04	**7.13**	4.72	12.04	**7.13**	4.72
57.93	Output torque, in-lb	–	–	–	5128	**5128**	5128	10439	**10439**	10439	12746	**14870**	14870	12746	**14870**	14870	12746	**14870**	14870
	OHL input shaft	–	–	–	**(A)**	**346**	360	**(A)**	**452**	471	**(A)**	**709**	739	**(A)**	**839**	878	**(A)**	**959**	998
	OHL output shaft **(B)**	–	–	–	4471	**4856**	4856	4471	**4856**	4856	4471	**4856**	4856	4471	**4856**	4856	4471	**4856**	4856
	Output RPM	–	–	–	50	**25**	17	50	**25**	17	50	**25**	17	50	**25**	17	50	**25**	17
	Input Hp (max) **(C)**	–	–	–	4.84	**2.46**	1.63	9.86	**5.00**	3.32	10.62	**5.98**	3.96	10.62	**5.98**	3.96	10.62	**5.98**	3.96
69.05	Output torque, in-lb	–	–	–	6111	**6111**	6111	12441	**12441**	12441	13396	**14870**	14870	13396	**14870**	14870	13396	**14870**	14870
	OHL input shaft	–	–	–	**(A)**	**346**	360	**(A)**	**456**	474	**(A)**	**709**	739	**(A)**	**839**	879	**(A)**	**959**	998
	OHL output shaft **(B)**	–	–	–	4471	**4856**	4856	4471	**4856**	4856	4471	**4856**	4856	4471	**4856**	4856	4471	**4856**	4856
	Output RPM	46	**23**	15	46	**23**	15	46	**23**	15	46	**23**	15	46	**23**	15	–	–	–
	Input Hp (max) **(C)**	3.98	**2.02**	1.34	4.85	**2.46**	1.63	9.86	**5.00**	3.32	10.03	**5.51**	3.66	10.03	**5.51**	3.65	–	–	–
74.88	Output torque, in-lb	5444	**5444**	5444	6628	**6628**	6628	13493	**13493**	13493	13715	**14870**	14870	13715	**14870**	14870	–	–	–
	OHL input shaft	**(A)**	**219**	226	**(A)**	**346**	360	**(A)**	**456**	474	**(A)**	**711**	740	**(A)**	**839**	879	–	–	–
	OHL output shaft **(B)**	4471	**4856**	4856	4471	**4856**	4856	4471	**4856**	4856	4471	**4856**	4856	4471	**4856**	4856	–	–	–
	Output RPM	41	**21**	14	41	**21**	14	41	**21**	14	41	**21**	14	41	**21**	14	–	–	–
	Input Hp (max) **(C)**	3.98	**2.02**	1.34	4.85	**2.46**	1.63	9.28	**4.94**	3.27	9.28	**4.94**	3.27	9.28	**4.94**	3.27	–	–	–
83.58	Output torque, in-lb	6077	**6077**	6077	7398	**7398**	7398	14166	**14870**	14870	14166	**14870**	14870	14166	**14870**	14870	–	–	–
	OHL input shaft	**(A)**	**219**	228	**(A)**	**346**	360	**(A)**	**455**	474	**(A)**	**712**	741	**(A)**	**839**	879	–	–	–
	OHL output shaft **(B)**	4471	**4856**	4856	4471	**4856**	4856	4471	**4856**	4856	4471	**4856**	4856	4471	**4856**	4856	–	–	–
	Output RPM	38	**19**	13	38	**19**	13	38	**19**	13	38	**19**	13	–	–	–	–	–	–
	Input Hp (max) **(C)**	3.98	**2.02**	1.34	4.85	**2.46**	1.63	8.77	**4.56**	3.02	8.77	**4.56**	3.02	–	–	–	–	–	–
90.53	Output torque, in-lb	6582	**6582**	6582	8013	**8013**	8013	14505	**14870**	14870	14505	**14870**	14870	–	–	–	–	–	–
	OHL input shaft	**(A)**	**218**	227	**(A)**	**346**	360	**(A)**	**456**	474	**(A)**	**713**	742	–	–	–	–	–	–
	OHL output shaft **(B)**	4856	**4856**	4856	4856	**4856**	4856	4856	**4856**	4856	4856	**4856**	4856	–	–	–	–	–	–
	Output RPM	34	**17**	11	34	**17**	11	34	**17**	11	34	**17**	11	–	–	–	–	–	–
	Input Hp (max) **(C)**	3.98	**2.02**	1.34	4.84	**2.46**	1.63	7.93	**4.02**	2.67	7.93	**4.02**	2.67	–	–	–	–	–	–
102.61	Output torque, in-lb	7460	**7460**	7460	9082	**9082**	9082	14870	**14870**	14870	14870	**14870**	14870	–	–	–	–	–	–
	OHL input shaft	**(A)**	**217**	226	**(A)**	**346**	360	**(A)**	**456**	475	**(A)**	**713**	743	–	–	–	–	–	–
	OHL output shaft **(B)**	4856	**4856**	4856	4856	**4856**	4856	4856	**4856**	4856	4856	**4856**	4856	–	–	–	–	–	–
	Output RPM	31	**16**	10	31	**16**	10	31	**16**	10	31	**16**	10	–	–	–	–	–	–
	Input Hp (max) **(C)**	3.88	**2.02**	1.34	4.84	**2.46**	1.63	7.36	**3.74**	2.48	7.36	**3.74**	2.48	–	–	–	–	–	–
110.54	Output torque, in-lb	7845	**8036**	8036	9783	**9783**	9783	14870	**14870**	14870	14870	**14870**	14870	–	–	–	–	–	–
	OHL input shaft	**(A)**	**218**	227	**(A)**	**346**	359	**(A)**	**457**	475	**(A)**	**714**	743	–	–	–	–	–	–
	OHL output shaft **(B)**	4856	**4856**	4856	4856	**4856**	4856	4856	**4856**	4856	4856	**4856**	4856	–	–	–	–	–	–

Service factor: 1.0

(A) (B) (C) - See footnotes page on inside back cover

Blank areas (-) indicate configuration not available

ILH 88

Size: H_883

Triple reduction – Clamp collar, three-piece coupled, separate

NEMA motor frame		56C			—			140TC			180TC			—			210TC		
IEC motor frame		71D			80D			90D			100D			112D			132D		
Separate group		71			80			90			100			112			132		
Ratio	Output Rating Data	3450	1750	1160	3450	1750	1160	3450	1750	1160	3450	1750	1160	3450	1750	1160	3450	1750	1160
	Output RPM	29	**15**	10	29	**15**	10	29	**15**	10	29	**15**	10	–	–	–	–	–	–
	Input Hp (max) **(C)**	3.66	**1.99**	1.34	4.85	**2.46**	1.63	6.81	**3.45**	2.29	6.81	**3.45**	2.29	–	–	–	–	–	–
119.52	Output torque, in-lb	7983	**8551**	8690	10579	**10579**	10579	14870	**14870**	14870	14870	**14870**	14870	–	–	–	–	–	–
	OHL input shaft	**(A)**	**217**	226	**(A)**	**345**	359	**(A)**	**457**	475	**(A)**	**714**	743	–	–	–	–	–	–
	OHL output shaft **(B)**	4856	**4856**	4856	4856	**4856**	4856	4856	**4856**	4856	4856	**4856**	4856	–	–	–	–	–	–
	Output RPM	27	**13**	9	27	**13**	9	27	**13**	9	27	**13**	9	–	–	–	–	–	–
	Input Hp (max) **(C)**	3.43	**1.86**	1.28	4.84	**2.46**	1.63	6.27	**3.18**	2.11	6.27	**3.18**	2.11	–	–	–	–	–	–
129.79	Output torque, in-lb	8125	**8702**	9019	11487	**11487**	11487	14870	**14870**	14870	14870	**14870**	14870	–	–	–	–	–	–
	OHL input shaft	**(A)**	**218**	226	**(A)**	**345**	359	**(A)**	**453**	471	**(A)**	**714**	743	–	–	–	–	–	–
	OHL output shaft **(B)**	4856	**4856**	4856	4856	**4856**	4856	4856	**4856**	4856	4856	**4856**	4856	–	–	–	–	–	–
	Output RPM	24	**12**	8	24	**12**	8	24	**12**	8	24	**12**	8	–	–	–	–	–	–
	Input Hp (max) **(C)**	3.16	**1.72**	1.18	4.84	**2.46**	1.63	5.67	**2.88**	1.91	5.67	**2.88**	1.91	–	–	–	–	–	–
143.50	Output torque, in-lb	8286	**8876**	9200	12701	**12701**	12701	14870	**14870**	14870	14870	**14870**	14870	–	–	–	–	–	–
	OHL input shaft	**(A)**	**218**	226	**(A)**	**344**	358	**(A)**	**454**	471	**(A)**	**714**	743	–	–	–	–	–	–
	OHL output shaft **(B)**	4856	**4856**	4856	4856	**4856**	4856	4856	**4856**	4856	4856	**4856**	4856	–	–	–	–	–	–
	Output RPM	22	**11**	7	22	**11**	7	22	**11**	7	22	**11**	7	–	–	–	–	–	–
	Input Hp (max) **(C)**	2.96	**1.61**	1.11	4.84	**2.46**	1.63	5.24	**2.66**	1.76	5.24	**2.66**	1.76	–	–	–	–	–	–
155.46	Output torque, in-lb	8408	**9007**	9337	13759	**13759**	13759	14870	**14870**	14870	14870	**14870**	14870	–	–	–	–	–	–
	OHL input shaft	**(A)**	**218**	226	**(A)**	**344**	358	**(A)**	**453**	472	**(A)**	**714**	744	–	–	–	–	–	–
	OHL output shaft **(B)**	4856	**4856**	4856	4856	**4856**	4856	4856	**4856**	4856	4856	**4856**	4856	–	–	–	–	–	–
	Output RPM	20	**10**	7	20	**10**	7	20	**10**	7	20	**10**	7	–	–	–	–	–	–
	Input Hp (max) **(C)**	2.68	**1.46**	1.00	4.65	**2.36**	1.56	4.65	**2.36**	1.56	4.65	**2.36**	1.56	–	–	–	–	–	–
175.18	Output torque, in-lb	8583	**9190**	9525	14870	**14870**	14870	14870	**14870**	14870	14870	**14870**	14870	–	–	–	–	–	–
	OHL input shaft	**(A)**	**218**	227	**(A)**	**343**	357	**(A)**	**455**	473	**(A)**	**715**	744	–	–	–	–	–	–
	OHL output shaft **(B)**	4856	**4856**	4856	4856	**4856**	4856	4856	**4856**	4856	4856	**4856**	4856	–	–	–	–	–	–
	Output RPM	18	**9**	6	18	**9**	6	18	**9**	6	–	–	–	–	–	–	–	–	–
	Input Hp (max) **(C)**	2.48	**1.35**	0.93	4.24	**2.15**	1.43	4.24	**2.15**	1.43	–	–	–	–	–	–	–	–	–
191.80	Output torque, in-lb	8701	**9320**	9659	14870	**14870**	14870	14870	**14870**	14870	–	–	–	–	–	–	–	–	–
	OHL input shaft	**(A)**	**218**	227	**(A)**	**344**	358	**(A)**	**455**	474	–	–	–	–	–	–	–	–	–
	OHL output shaft **(B)**	4856	**4856**	4856	4856	**4856**	4856	4856	**4856**	4856	–	–	–	–	–	–	–	–	–
	Output RPM	16	**8**	5	16	**8**	5	16	**8**	5	–	–	–	–	–	–	–	–	–
	Input Hp (max) **(C)**	2.26	**1.23**	0.84	3.81	**1.93**	1.28	3.81	**1.93**	1.28	–	–	–	–	–	–	–	–	–
213.64	Output torque, in-lb	8834	**9461**	9807	14870	**14870**	14870	14870	**14870**	14870	–	–	–	–	–	–	–	–	–
	OHL input shaft	**(A)**	**219**	227	**(A)**	**345**	359	**(A)**	**456**	474	–	–	–	–	–	–	–	–	–
	OHL output shaft **(B)**	4856	**4856**	4856	4856	**4856**	4856	4856	**4856**	4856	–	–	–	–	–	–	–	–	–
	Output RPM	14	**7**	5	14	**7**	5	14	**7**	5	–	–	–	–	–	–	–	–	–
	Input Hp (max) **(C)**	2.01	**1.09**	0.75	3.33	**1.69**	1.12	3.33	**1.69**	1.12	–	–	–	–	–	–	–	–	–
244.29	Output torque, in-lb	8985	**9623**	9974	14870	**14870**	14870	14870	**14870**	14870	–	–	–	–	–	–	–	–	–
	OHL input shaft	**(A)**	**219**	227	**(A)**	**345**	359	**(A)**	**456**	475	–	–	–	–	–	–	–	–	–
	OHL output shaft **(B)**	4856	**4856**	4856	4856	**4856**	4856	4856	**4856**	4856	–	–	–	–	–	–	–	–	–
	Output RPM	13	**6**	4	13	**6**	4	13	**6**	4	–	–	–	–	–	–	–	–	–
	Input Hp (max) **(C)**	1.84	**1.00**	0.69	3.00	**1.52**	1.01	3.00	**1.52**	1.01	–	–	–	–	–	–	–	–	–
270.90	Output torque, in-lb	9091	**9735**	10091	14870	**14870**	14870	14870	**14870**	14870	–	–	–	–	–	–	–	–	–
	OHL input shaft	**(A)**	**219**	228	**(A)**	**345**	359	**(A)**	**456**	475	–	–	–	–	–	–	–	–	–
	OHL output shaft **(B)**	4856	**4856**	4856	4856	**4856**	4856	4856	**4856**	4856	–	–	–	–	–	–	–	–	–
	Output RPM	11	**6**	4	11	**6**	4	11	**6**	4	–	–	–	–	–	–	–	–	–
	Input Hp (max) **(C)**	1.67	**0.91**	0.62	2.17	**1.37**	0.81	2.17	**1.37**	0.81	–	–	–	–	–	–	–	–	–
300.41	Output torque, in-lb	9186	**9840**	10199	11903	**14870**	13169	11903	**14870**	13169	–	–	–	–	–	–	–	–	–
	OHL input shaft	**(A)**	**219**	228	**(A)**	**346**	360	**(A)**	**457**	476	–	–	–	–	–	–	–	–	–
	OHL output shaft **(B)**	4856	**4856**	4856	4856	**4856**	4856	4856	**4856**	4856	–	–	–	–	–	–	–	–	–

Service factor: 1.0

(A) (B) (C) - See footnotes page on inside back cover

Blank areas (-) indicate configuration not available

ILH 88

Size: H_884

Four-stage reduction – Clamp collar, three-piece coupled, separate

NEMA motor frame		56C			—			140TC			180TC			—		
IEC motor frame		71D			80D			90D			100D			112D		
Separate group		71			80			90			100			112		
Ratio	**Output Rating data**	**3450**	**1750**	**1160**	**3450**	**1750**	**1160**	**3450**	**1750**	**1160**	**3450**	**1750**	**1160**	**3450**	**1750**	**1160**
	Output RPM	10.38	**5.26**	3.49	10.38	**5.26**	3.49	10.38	**5.26**	3.49	10.38	**5.26**	3.49	10.38	**5.26**	3.49
	Input Hp (max) (C)	2.45	**1.24**	0.82	2.45	**1.24**	0.82	2.45	**1.24**	0.82	2.45	**1.24**	0.82	2.45	**1.24**	0.82
332.46	Output torque, in-lb	14870	**14870**	14870	14870	**14870**	14870	14870	**14870**	14870	14870	**14870**	14870	14870	**14870**	14870
	OHL input shaft	(A)	(A)	(A)	(A)	(A)	(A)	(A)	(A)	(A)	(A)	(A)	(A)	(A)	(A)	(A)
	OHL output shaft **(B)**	4856	**4856**	4856	4856	**4856**	4856	4856	**4856**	4856	4856	**4856**	4856	4856	**4856**	4856
	Output RPM	9.84	**4.99**	3.31	9.84	**4.99**	3.31	9.84	**4.99**	3.31	9.84	**4.99**	3.31	9.84	**4.99**	3.31
	Input Hp (max) **(C)**	2.32	**1.18**	0.78	2.32	**1.18**	0.78	2.32	**1.18**	0.78	2.32	**1.18**	0.78	2.32	**1.18**	0.78
350.43	Output torque, in-lb	14870	**14870**	14870	14870	**14870**	14870	14870	**14870**	14870	14870	**14870**	14870	14870	**14870**	14870
	OHL input shaft	(A)	(A)	(A)	(A)	(A)	(A)	(A)	(A)	(A)	(A)	(A)	(A)	(A)	(A)	(A)
	OHL output shaft **(B)**	4856	**4856**	4856	4856	**4856**	4856	4856	**4856**	4856	4856	**4856**	4856	4856	**4856**	4856
	Output RPM	9.63	**4.89**	3.24	9.63	**4.89**	3.24	9.63	**4.89**	3.24	9.63	**4.89**	3.24	9.63	**4.89**	3.24
	Input Hp (max) **(C)**	2.27	**1.15**	0.76	2.27	**1.15**	0.76	2.27	**1.15**	0.76	2.27	**1.15**	0.76	2.27	**1.15**	0.76
358.15	Output torque, in-lb	14870	**14870**	14870	14870	**14870**	14870	14870	**14870**	14870	14870	**14870**	14870	14870	**14870**	14870
	OHL input shaft	(A)	(A)	(A)	(A)	(A)	(A)	(A)	(A)	(A)	(A)	(A)	(A)	(A)	(A)	(A)
	OHL output shaft **(B)**	4856	**4856**	4856	4856	**4856**	4856	4856	**4856**	4856	4856	**4856**	4856	4856	**4856**	4856
	Output RPM	8.69	**4.41**	2.92	8.69	**4.41**	2.92	8.69	**4.41**	2.92	8.69	**4.41**	2.92	8.69	**4.41**	2.92
	Input Hp (max) **(C)**	2.05	**1.04**	0.69	2.05	**1.04**	0.69	2.05	**1.04**	0.69	2.05	**1.04**	0.69	2.05	**1.04**	0.69
397.10	Output torque, in-lb	14870	**14870**	14870	14870	**14870**	14870	14870	**14870**	14870	14870	**14870**	14870	14870	**14870**	14870
	OHL input shaft	(A)	(A)	(A)	(A)	(A)	(A)	(A)	(A)	(A)	(A)	(A)	(A)	(A)	(A)	(A)
	OHL output shaft **(B)**	4856	**4856**	4856	4856	**4856**	4856	4856	**4856**	4856	4856	**4856**	4856	4856	**4856**	4856
	Output RPM	8.25	**4.18**	2.77	8.25	**4.18**	2.77	8.25	**4.18**	2.77	8.25	**4.18**	2.77	8.25	**4.18**	2.77
	Input Hp (max) **(C)**	1.95	**0.99**	0.65	1.95	**0.99**	0.65	1.95	**0.99**	0.65	1.95	**0.99**	0.65	1.95	**0.99**	0.65
418.25	Output torque, in-lb	14870	**14870**	14870	14870	**14870**	14870	14870	**14870**	14870	14870	**14870**	14870	14870	**14870**	14870
	OHL input shaft	(A)	(A)	(A)	(A)	(A)	(A)	(A)	(A)	(A)	(A)	(A)	(A)	(A)	(A)	(A)
	OHL output shaft **(B)**	4856	**4856**	4856	4856	**4856**	4856	4856	**4856**	4856	4856	**4856**	4856	4856	**4856**	4856
	Output RPM	7.52	**3.82**	2.53	7.52	**3.82**	2.53	7.52	**3.82**	2.53	7.52	**3.82**	2.53	7.52	**3.82**	2.53
	Input Hp (max) **(C)**	1.77	**0.90**	0.60	1.77	**0.90**	0.60	1.77	**0.90**	0.60	1.77	**0.90**	0.60	1.77	**0.90**	0.60
458.61	Output torque, in-lb	14870	**14870**	14870	14870	**14870**	14870	14870	**14870**	14870	14870	**14870**	14870	14870	**14870**	14870
	OHL input shaft	(A)	(A)	(A)	(A)	(A)	(A)	(A)	(A)	(A)	(A)	(A)	(A)	(A)	(A)	(A)
	OHL output shaft **(B)**	4856	**4856**	4856	4856	**4856**	4856	4856	**4856**	4856	4856	**4856**	4856	4856	**4856**	4856
	Output RPM	7.29	**3.70**	2.45	7.29	**3.70**	2.45	7.29	**3.70**	2.45	7.29	**3.70**	2.45	7.29	**3.70**	2.45
	Input Hp (max) **(C)**	1.72	**0.87**	0.58	1.72	**0.87**	0.58	1.72	**0.87**	0.58	1.72	**0.87**	0.58	1.72	**0.87**	0.58
472.99	Output torque, in-lb	14870	**14870**	14870	14870	**14870**	14870	14870	**14870**	14870	14870	**14870**	14870	14870	**14870**	14870
	OHL input shaft	(A)	(A)	(A)	(A)	(A)	(A)	(A)	(A)	(A)	(A)	(A)	(A)	(A)	(A)	(A)
	OHL output shaft **(B)**	4856	**4856**	4856	4856	**4856**	4856	4856	**4856**	4856	4856	**4856**	4856	4856	**4856**	4856
	Output RPM	6.62	**3.36**	2.23	6.62	**3.36**	2.23	6.62	**3.36**	2.23	6.62	**3.36**	2.23	6.62	**3.36**	2.23
	Input Hp (max) **(C)**	1.56	**0.79**	0.53	1.56	**0.79**	0.53	1.56	**0.79**	0.53	1.56	**0.79**	0.53	1.56	**0.79**	0.53
521.26	Output torque, in-lb	14870	**14870**	14870	14870	**14870**	14870	14870	**14870**	14870	14870	**14870**	14870	14870	**14870**	14870
	OHL input shaft	(A)	(A)	(A)	(A)	(A)	(A)	(A)	(A)	(A)	(A)	(A)	(A)	(A)	(A)	(A)
	OHL output shaft **(B)**	4856	**4856**	4856	4856	**4856**	4856	4856	**4856**	4856	4856	**4856**	4856	4856	**4856**	4856
	Output RPM	6.51	**3.30**	2.19	6.51	**3.30**	2.19	6.51	**3.30**	2.19	6.51	**3.30**	2.19	6.51	**3.30**	2.19
	Input Hp (max) **(C)**	1.54	**0.78**	0.52	1.54	**0.78**	0.52	1.54	**0.78**	0.52	1.54	**0.78**	0.52	1.54	**0.78**	0.52
529.60	Output torque, in-lb	14870	**14870**	14870	14870	**14870**	14870	14870	**14870**	14870	14870	**14870**	14870	14870	**14870**	14870
	OHL input shaft	(A)	(A)	(A)	(A)	(A)	(A)	(A)	(A)	(A)	(A)	(A)	(A)	(A)	(A)	(A)
	OHL output shaft **(B)**	4856	**4856**	4856	4856	**4856**	4856	4856	**4856**	4856	4856	**4856**	4856	4856	**4856**	4856
	Output RPM	5.90	**2.99**	1.98	5.90	**2.99**	1.98	5.90	**2.99**	1.98	5.90	**2.99**	1.98	–	–	–
	Input Hp (max) **(C)**	1.39	**0.71**	0.47	1.39	**0.71**	0.47	1.39	**0.71**	0.47	1.39	**0.71**	0.47	–	–	–
585.06	Output torque, in-lb	14870	**14870**	14870	14870	**14870**	14870	14870	**14870**	14870	14870	**14870**	14870	–	–	–
	OHL input shaft	(A)	(A)	(A)	(A)	(A)	(A)	**(A)**	**(A)**	**(A)**	**(A)**	**(A)**	**(A)**	–	–	–
	OHL output shaft **(B)**	4856	**4856**	4856	4856	**4856**	4856	4856	**4856**	4856	4856	**4856**	4856	–	–	–
	Output RPM	5.73	**2.91**	1.93	5.73	**2.91**	1.93	5.73	**2.91**	1.93	5.73	**2.91**	1.93	5.73	**2.91**	1.93
	Input Hp (max) **(C)**	1.35	**0.69**	0.45	1.35	**0.69**	0.45	1.35	**0.69**	0.45	1.35	**0.69**	0.45	1.35	**0.69**	0.45
601.63	Output torque, in-lb	14870	**14870**	14870	14870	**14870**	14870	14870	**14870**	14870	14870	**14870**	14870	14870	**14870**	14870
	OHL input shaft	(A)	(A)	(A)	(A)	(A)	(A)	(A)	(A)	(A)	(A)	(A)	(A)	(A)	(A)	(A)
	OHL output shaft **(B)**	4856	**4856**	4856	4856	**4856**	4856	4856	**4856**	4856	4856	**4856**	4856	4856	**4856**	4856

Service factor: 1.0

(A) (B) (C) - See footnotes page on inside back cover

Blank areas (-) indicate configuration not available

ILH 88

Size: H_884

Four-stage reduction – Clamp collar, three-piece coupled, separate

NEMA motor frame		56C			—			140TC			180TC			—		
IEC motor frame		71D			80D			90D			100D			112D		
Separate group		71			80			90			100			112		
Ratio	Output Rating data	3450	1750	1160	3450	1750	1160	3450	1750	1160	3450	1750	1160	3450	1750	1160
	Output RPM	5.34	**2.71**	1.79	5.34	**2.71**	1.79	5.34	**2.71**	1.79	5.34	**2.71**	1.79	5.34	**2.71**	1.79
	Input Hp (max) **(C)**	1.26	**0.64**	0.42	1.26	**0.64**	0.42	1.26	**0.64**	0.42	1.26	**0.64**	0.42	1.26	**0.64**	0.42
646.66	Output torque, in-lb	14870	**14870**	14870	14870	**14870**	14870	14870	**14870**	14870	14870	**14870**	14870	14870	**14870**	14870
	OHL input shaft	(A)	(A)	(A)	(A)	(A)	(A)	(A)	(A)	(A)	(A)	(A)	(A)	(A)	(A)	(A)
	OHL output shaft **(B)**	4856	**4856**	4856	4856	**4856**	4856	4856	**4856**	4856	4856	**4856**	4856	4856	**4856**	4856
	Output RPM	5.05	**2.56**	1.70	5.05	**2.56**	1.70	5.05	**2.56**	1.70	5.05	**2.56**	1.70	5.05	**2.56**	1.70
	Input Hp (max) **(C)**	1.19	**0.60**	0.40	1.19	**0.60**	0.40	1.19	**0.60**	0.40	1.19	**0.60**	0.40	1.19	**0.60**	0.40
682.81	Output torque, in-lb	14870	**14870**	14870	14870	**14870**	14870	14870	**14870**	14870	14870	**14870**	14870	14870	**14870**	14870
	OHL input shaft	(A)	(A)	(A)	(A)	(A)	(A)	(A)	(A)	(A)	(A)	(A)	(A)	(A)	(A)	(A)
	OHL output shaft **(B)**	4856	**4856**	4856	4856	**4856**	4856	4856	**4856**	4856	4856	**4856**	4856	4856	**4856**	4856
	Output RPM	4.54	**2.30**	1.53	4.54	**2.30**	1.53	4.54	**2.30**	1.53	4.54	**2.30**	1.53	4.54	**2.30**	1.53
	Input Hp (max) **(C)**	1.07	**0.54**	0.36	1.07	**0.54**	0.36	1.07	**0.54**	0.36	1.07	**0.54**	0.36	1.07	**0.54**	0.36
759.27	Output torque, in-lb	14870	**14870**	14870	14870	**14870**	14870	14870	**14870**	14870	14870	**14870**	14870	14870	**14870**	14870
	OHL input shaft	(A)	(A)	(A)	(A)	(A)	(A)	(A)	(A)	(A)	(A)	(A)	(A)	(A)	(A)	(A)
	OHL output shaft **(B)**	4856	**4856**	4856	4856	**4856**	4856	4856	**4856**	4856	4856	**4856**	4856	4856	**4856**	4856
	Output RPM	4.46	**2.26**	1.50	4.46	**2.26**	1.50	4.46	**2.26**	1.50	4.46	**2.26**	1.50	–	–	–
	Input Hp (max) **(C)**	1.05	**0.53**	0.35	1.05	**0.53**	0.35	1.05	**0.53**	0.35	1.05	**0.53**	0.35	–	–	–
773.78	Output torque, in-lb	14870	**14870**	14870	14870	**14870**	14870	14870	**14870**	14870	14870	**14870**	14870	–	–	–
	OHL input shaft	**(A)**	**(A)**	**(A)**	**(A)**	**(A)**	**(A)**	**(A)**	**(A)**	**(A)**	**(A)**	**(A)**	**(A)**	–	–	–
	OHL output shaft **(B)**	4856	**4856**	4856	4856	**4856**	4856	4856	**4856**	4856	4856	**4856**	4856	–	–	–
	Output RPM	4.32	**2.19**	1.45	4.32	**2.19**	1.45	4.32	**2.19**	1.45	4.32	**2.19**	1.45	4.32	**2.19**	1.45
	Input Hp (max) **(C)**	1.02	**0.52**	0.34	1.02	**0.52**	0.34	1.02	**0.52**	0.34	1.02	**0.52**	0.34	1.02	**0.52**	0.34
799.16	Output torque, in-lb	14870	**14870**	14870	14870	**14870**	14870	14870	**14870**	14870	14870	**14870**	14870	14870	**14870**	14870
	OHL input shaft	(A)	(A)	(A)	(A)	(A)	(A)	(A)	(A)	(A)	(A)	(A)	(A)	(A)	(A)	(A)
	OHL output shaft **(B)**	4856	**4856**	4856	4856	**4856**	4856	4856	**4856**	4856	4856	**4856**	4856	4856	**4856**	4856
	Output RPM	3.89	**1.97**	1.31	3.89	**1.97**	1.31	3.89	**1.97**	1.31	3.89	**1.97**	1.31	3.89	**1.97**	1.31
	Input Hp (max) **(C)**	0.92	**0.47**	0.31	0.92	**0.47**	0.31	0.92	**0.47**	0.31	0.92	**0.47**	0.31	0.92	**0.47**	0.31
886.21	Output torque, in-lb	14870	**14870**	14870	14870	**14870**	14870	14870	**14870**	14870	14870	**14870**	14870	14870	**14870**	14870
	OHL input shaft	(A)	(A)	(A)	(A)	(A)	(A)	(A)	(A)	(A)	(A)	(A)	(A)	(A)	(A)	(A)
	OHL output shaft **(B)**	4856	**4856**	4856	4856	**4856**	4856	4856	**4856**	4856	4856	**4856**	4856	4856	**4856**	4856
	Output RPM	3.70	**1.88**	1.24	3.70	**1.88**	1.24	3.70	**1.88**	1.24	–	–	–	–	–	–
	Input Hp (max) **(C)**	0.87	**0.44**	0.29	0.87	**0.44**	0.29	0.87	**0.44**	0.29	–	–	–	–	–	–
932.72	Output torque, in-lb	14870	**14870**	14870	14870	**14870**	14870	14870	**14870**	14870	–	–	–	–	–	–
	OHL input shaft	(A)	**(A)**	**(A)**	**(A)**	**(A)**	**(A)**	**(A)**	**(A)**	**(A)**	–	–	–	–	–	–
	OHL output shaft **(B)**	4856	**4856**	4856	4856	**4856**	4856	4856	**4856**	4856	–	–	–	–	–	–
	Output RPM	3.50	**1.77**	1.18	3.50	**1.77**	1.18	3.50	**1.77**	1.18	3.50	**1.77**	1.18	3.50	**1.77**	1.18
	Input Hp (max) **(C)**	0.82	**0.42**	0.28	0.82	**0.42**	0.28	0.82	**0.42**	0.28	0.82	**0.42**	0.28	0.82	**0.42**	0.28
987.02	Output torque, in-lb	14870	**14870**	14870	14870	**14870**	14870	14870	**14870**	14870	14870	**14870**	14870	14870	**14870**	14870
	OHL input shaft	(A)	(A)	(A)	(A)	(A)	(A)	(A)	(A)	(A)	(A)	(A)	(A)	(A)	(A)	(A)
	OHL output shaft **(B)**	4856	**4856**	4856	4856	**4856**	4856	4856	**4856**	4856	4856	**4856**	4856	4856	**4856**	4856
	Output RPM	3.43	**1.74**	1.15	3.43	**1.74**	1.15	3.43	**1.74**	1.15	3.43	**1.74**	1.15	–	–	–
	Input Hp (max) **(C)**	0.81	**0.41**	0.27	0.81	**0.41**	0.27	0.81	**0.41**	0.27	0.81	**0.41**	0.27	–	–	–
1004.50	Output torque, in-lb	14870	**14870**	14870	14870	**14870**	14870	14870	**14870**	14870	14870	**14870**	14870	–	–	–
	OHL input shaft	**(A)**	**(A)**	**(A)**	**(A)**	**(A)**	**(A)**	**(A)**	**(A)**	**(A)**	**(A)**	**(A)**	**(A)**	–	–	–
	OHL output shaft **(B)**	4856	**4856**	4856	4856	**4856**	4856	4856	**4856**	4856	4856	**4856**	4856	–	–	–
	Output RPM	3.35	**1.70**	1.13	3.35	**1.70**	1.13	3.35	**1.70**	1.13	3.35	**1.70**	1.13	3.35	**1.70**	1.13
	Input Hp (max) **(C)**	0.79	**0.40**	0.27	0.79	**0.40**	0.27	0.79	**0.40**	0.27	0.79	**0.40**	0.27	0.79	**0.40**	0.27
1028.46	Output torque, in-lb	14870	**14870**	14870	14870	**14870**	14870	14870	**14870**	14870	14870	**14870**	14870	14870	**14870**	14870
	OHL input shaft	(A)	(A)	(A)	(A)	(A)	(A)	(A)	(A)	(A)	(A)	(A)	(A)	(A)	(A)	(A)
	OHL output shaft **(B)**	4856	**4856**	4856	4856	**4856**	4856	4856	**4856**	4856	4856	**4856**	4856	4856	**4856**	4856
	Output RPM	3.03	**1.53**	1.02	3.03	**1.53**	1.02	3.03	**1.53**	1.02	3.03	**1.53**	1.02	3.03	**1.53**	1.02
	Input Hp (max) **(C)**	0.71	**0.36**	0.24	0.71	**0.36**	0.24	0.71	**0.36**	0.24	0.71	**0.36**	0.24	0.71	**0.36**	0.24
1140.49	Output torque, in-lb	14870	**14870**	14870	14870	**14870**	14870	14870	**14870**	14870	14870	**14870**	14870	14870	**14870**	14870
	OHL input shaft	(A)	(A)	(A)	(A)	(A)	(A)	(A)	(A)	(A)	(A)	(A)	(A)	(A)	(A)	(A)
	OHL output shaft **(B)**	4856	**4856**	4856	4856	**4856**	4856	4856	**4856**	4856	4856	**4856**	4856	4856	**4856**	4856

Service factor: 1.0

(A) (B) (C) - See footnotes page on inside back cover

Blank areas (-) indicate configuration not available

ILH 88

Size: H_884

Four-stage reduction – Clamp collar, three-piece coupled, separate

NEMA motor frame		56C			—			140TC			180TC			—		
IEC motor frame		71D			80D			90D			100D			112D		
Separate group		71			80			90			100			112		
Ratio	**Output Rating data**	**3450**	**1750**	**1160**	**3450**	**1750**	**1160**	**3450**	**1750**	**1160**	**3450**	**1750**	**1160**	**3450**	**1750**	**1160**
	Output RPM	2.81	**1.43**	0.95	2.81	**1.43**	0.95	2.81	**1.43**	0.95	2.81	**1.43**	0.95	–	–	–
	Input Hp (max) **(C)**	0.66	**0.34**	0.22	0.66	**0.34**	0.22	0.66	**0.34**	0.22	0.66	**0.34**	0.22	–	–	–
1226.26	Output torque, in-lb	14870	**14870**	14870	14870	**14870**	14870	14870	**14870**	14870	14870	**14870**	14870	–	–	–
	OHL input shaft	(A)	(A)	(A)	(A)	(A)	(A)	(A)	(A)	**(A)**	**(A)**	**(A)**	**(A)**	–	–	–
	OHL output shaft **(B)**	4856	**4856**	4856	4856	**4856**	4856	4856	**4856**	4856	4856	**4856**	4856	–	–	–
	Output RPM	2.64	**1.34**	0.89	2.64	**1.34**	0.89	2.64	**1.34**	0.89	–	–	–	–	–	–
	Input Hp (max) **(C)**	0.62	**0.32**	0.21	0.62	**0.32**	0.21	0.62	**0.32**	0.21	–	–	–	–	–	–
1304.42	Output torque, in-lb	14870	**14870**	14870	14870	**14870**	14870	14870	**14870**	14870	–	–	–	–	–	–
	OHL input shaft	**(A)**	**(A)**	**(A)**	**(A)**	**(A)**	**(A)**	**(A)**	**(A)**	**(A)**	–	–	–	–	–	–
	OHL output shaft **(B)**	4856	**4856**	4856	4856	**4856**	4856	4856	**4856**	4856	–	–	–	–	–	–
	Output RPM	2.49	**1.26**	0.84	2.49	**1.26**	0.84	2.49	**1.26**	0.84	2.49	**1.26**	0.84	2.49	**1.26**	0.84
	Input Hp (max) **(C)**	0.59	**0.30**	0.20	0.59	**0.30**	0.20	0.59	**0.30**	0.20	0.59	**0.30**	0.20	0.59	**0.30**	0.20
1387.89	Output torque, in-lb	14870	**14870**	14870	14870	**14870**	14870	14870	**14870**	14870	14870	**14870**	14870	14870	**14870**	14870
	OHL input shaft	(A)	(A)	(A)	(A)	(A)	(A)	(A)	(A)	(A)	(A)	(A)	(A)	(A)	(A)	(A)
	OHL output shaft **(B)**	4856	**4856**	4856	4856	**4856**	4856	4856	**4856**	4856	4856	**4856**	4856	4856	**4856**	4856
	Output RPM	2.31	**1.17**	0.78	2.31	**1.17**	0.78	2.31	**1.17**	0.78	2.31	**1.17**	0.78	–	–	–
	Input Hp (max) **(C)**	0.54	**0.28**	0.18	0.54	**0.28**	0.18	0.54	**0.28**	0.18	0.54	**0.28**	0.18	–	–	–
1495.48	Output torque, in-lb	14870	**14870**	14870	14870	**14870**	14870	14870	**14870**	14870	14870	**14870**	14870	–	–	–
	OHL input shaft	(A)	(A)	(A)	(A)	(A)	(A)	(A)	(A)	(A)	(A)	(A)	(A)	–	–	–
	OHL output shaft **(B)**	4856	**4856**	4856	4856	**4856**	4856	4856	**4856**	4856	4856	**4856**	4856	–	–	–
	Output RPM	2.26	**1.15**	0.76	2.26	**1.15**	0.76	2.26	**1.15**	0.76	2.26	**1.15**	0.76	2.26	**1.15**	0.76
	Input Hp (max) **(C)**	0.53	**0.27**	0.18	0.53	**0.27**	0.18	0.53	**0.27**	0.18	0.53	**0.27**	0.18	0.53	**0.27**	0.18
1526.08	Output torque, in-lb	14870	**14870**	14870	14870	**14870**	14870	14870	**14870**	14870	14870	**14870**	14870	14870	**14870**	14870
	OHL input shaft	(A)	(A)	(A)	(A)	(A)	(A)	(A)	(A)	(A)	(A)	(A)	(A)	(A)	(A)	(A)
	OHL output shaft **(B)**	4856	**4856**	4856	4856	**4856**	4856	4856	**4856**	4856	4856	**4856**	4856	4856	**4856**	4856
	Output RPM	2.01	**1.02**	0.68	2.01	**1.02**	0.68	2.01	**1.02**	0.68	2.01	**1.02**	0.68	2.01	**1.02**	0.68
	Input Hp (max) **(C)**	0.47	**0.24**	0.16	0.47	**0.24**	0.16	0.47	**0.24**	0.16	0.47	**0.24**	0.16	0.47	**0.24**	0.16
1714.80	Output torque, in-lb	14870	**14870**	14870	14870	**14870**	14870	14870	**14870**	14870	14870	**14870**	14870	14870	**14870**	14870
	OHL input shaft	(A)	(A)	(A)	(A)	(A)	(A)	(A)	(A)	(A)	(A)	(A)	(A)	(A)	(A)	(A)
	OHL output shaft **(B)**	4856	**4856**	4856	4856	**4856**	4856	4856	**4856**	4856	4856	**4856**	4856	4856	**4856**	4856
	Output RPM	1.98	**1.00**	0.67	1.98	**1.00**	0.67	1.98	**1.00**	0.67	–	–	–	–	–	–
	Input Hp (max) **(C)**	0.47	**0.24**	0.16	0.47	**0.24**	0.16	0.47	**0.24**	0.16	–	–	–	–	–	–
1743.46	Output torque, in-lb	14870	**14870**	14870	14870	**14870**	14870	14870	**14870**	14870	–	–	–	–	–	–
	OHL input shaft	(A)	(A)	(A)	(A)	(A)	(A)	(A)	(A)	(A)	–	–	–	–	–	–
	OHL output shaft **(B)**	4856	**4856**	4856	4856	**4856**	4856	4856	**4856**	4856	–	–	–	–	–	–
	Output RPM	1.78	**0.90**	0.60	1.78	**0.90**	0.60	1.78	**0.90**	0.60	–	–	–	–	–	–
	Input Hp (max) **(C)**	0.42	**0.21**	0.14	0.42	**0.21**	0.14	0.42	**0.21**	0.14	–	–	–	–	–	–
1941.99	Output torque, in-lb	14870	**14870**	14870	14870	**14870**	14870	14870	**14870**	14870	–	–	–	–	–	–
	OHL input shaft	**(A)**	**(A)**	**(A)**	**(A)**	**(A)**	**(A)**	**(A)**	**(A)**	**(A)**	–	–	–	–	–	–
	OHL output shaft **(B)**	4856	**4856**	4856	4856	**4856**	4856	4856	**4856**	4856	–	–	–	–	–	–
	Output RPM	1.74	**0.88**	0.59	1.74	**0.88**	0.59	–	–	–	–	–	–	–	–	–
	Input Hp (max) **(C)**	0.41	**0.21**	0.14	0.41	**0.21**	0.14	–	–	–	–	–	–	–	–	–
1979.53	Output torque, in-lb	14870	**14870**	14870	14870	**14870**	14870	–	–	–	–	–	–	–	–	–
	OHL input shaft	**(A)**	**(A)**	**(A)**	**(A)**	**(A)**	**(A)**	–	–	–	–	–	–	–	–	–
	OHL output shaft **(B)**	4856	**4856**	4856	4856	**4856**	4856	–	–	–	–	–	–	–	–	–
	Output RPM	1.64	**0.83**	0.55	1.64	**0.83**	0.55	1.64	**0.83**	0.55	1.64	**0.83**	0.55	–	–	–
	Input Hp (max) **(C)**	0.39	**0.20**	0.13	0.39	**0.20**	0.13	0.39	**0.20**	0.13	0.39	**0.20**	0.13	–	–	–
2102.87	Output torque, in-lb	14870	**14870**	14870	14870	**14870**	14870	14870	**14870**	14870	14870	**14870**	14870	–	–	–
	OHL input shaft	**(A)**	**(A)**	**(A)**	**(A)**	**(A)**	**(A)**	**(A)**	**(A)**	**(A)**	**(A)**	**(A)**	**(A)**	–	–	–
	OHL output shaft **(B)**	4856	**4856**	4856	4856	**4856**	4856	4856	**4856**	4856	4856	**4856**	4856	–	–	–
	Output RPM	1.56	**0.79**	0.52	1.56	**0.79**	0.52	1.56	**0.79**	0.52	–	–	–	–	–	–
	Input Hp (max) **(C)**	0.37	**0.19**	0.12	0.37	**0.19**	0.12	0.37	**0.19**	0.12	–	–	–	–	–	–
2213.25	Output torque, in-lb	14870	**14870**	14870	14870	**14870**	14870	14870	**14870**	14870	–	–	–	–	–	–
	OHL input shaft	(A)	(A)	(A)	(A)	**(A)**	**(A)**	**(A)**	**(A)**	**(A)**	–	–	–	–	–	–
	OHL output shaft **(B)**	4856	**4856**	4856	4856	**4856**	4856	4856	**4856**	4856	–	–	–	–	–	–

Service factor: 1.0

(A) (B) (C) - See footnotes page on inside back cover

Blank areas (-) indicate configuration not available

ILH 88

Size: H_885

Five-stage reduction – Clamp collar, three-piece coupled, separate

NEMA motor frame		56C			—			140TC			180TC			—		
IEC motor frame		71D			80D			90D			100D			112D		
Separate group		71			80			90			100			112		
Ratio	Output Rating data	3450	1750	1160	3450	1750	1160	3450	1750	1160	3450	1750	1160	3450	1750	1160
	Output RPM	1.51	**0.77**	0.51	1.51	**0.77**	0.51	1.51	**0.77**	0.51	1.51	**0.77**	0.51	1.51	**0.77**	0.51
	Input Hp (max) **(C)**	0.36	**0.18**	0.12	0.36	**0.18**	0.12	0.36	**0.18**	0.12	0.36	**0.18**	0.12	0.36	**0.18**	0.12
2282.15	Output torque, in-lb	14870	**14870**	14870	14870	**14870**	14870	14870	**14870**	14870	14870	**14870**	14870	14870	**14870**	14870
	OHL input shaft	(A)	(A)	(A)	(A)	(A)	(A)	(A)	(A)	(A)	(A)	(A)	(A)	(A)	(A)	(A)
	OHL output shaft **(B)**	4856	**4856**	4856	4856	**4856**	4856	4856	**4856**	4856	4856	**4856**	4856	4856	**4856**	4856
	Output RPM	1.37	**0.70**	0.46	1.37	**0.70**	0.46	1.37	**0.70**	0.46	1.37	**0.70**	0.46	1.37	**0.70**	0.46
	Input Hp (max) **(C)**	0.32	**0.16**	0.11	0.32	**0.16**	0.11	0.32	**0.16**	0.11	0.32	**0.16**	0.11	0.32	**0.16**	0.11
2513.79	Output torque, in-lb	14870	**14870**	14870	14870	**14870**	14870	14870	**14870**	14870	14870	**14870**	14870	14870	**14870**	14870
	OHL input shaft	(A)	(A)	(A)	(A)	(A)	(A)	(A)	(A)	(A)	(A)	(A)	(A)	(A)	(A)	(A)
	OHL output shaft **(B)**	4856	**4856**	4856	4856	**4856**	4856	4856	**4856**	4856	4856	**4856**	4856	4856	**4856**	4856
	Output RPM	1.34	**0.68**	0.45	1.34	**0.68**	0.45	1.34	**0.68**	0.45	1.34	**0.68**	0.45	1.34	**0.68**	0.45
	Input Hp (max) **(C)**	0.32	**0.16**	0.11	0.32	**0.16**	0.11	0.32	**0.16**	0.11	0.32	**0.16**	0.11	0.32	**0.16**	0.11
2571.64	Output torque, in-lb	14870	**14870**	14870	14870	**14870**	14870	14870	**14870**	14870	14870	**14870**	14870	14870	**14870**	14870
	OHL input shaft	(A)	(A)	(A)	(A)	(A)	(A)	(A)	(A)	(A)	(A)	(A)	(A)	(A)	(A)	(A)
	OHL output shaft **(B)**	4856	**4856**	4856	4856	**4856**	4856	4856	**4856**	4856	4856	**4856**	4856	4856	**4856**	4856
	Output RPM	1.25	**0.63**	0.42	1.25	**0.63**	0.42	1.25	**0.63**	0.42	1.25	**0.63**	0.42	–	–	–
	Input Hp (max) **(C)**	0.30	**0.15**	0.10	0.30	**0.15**	0.10	0.30	**0.15**	0.10	0.30	**0.15**	0.10	–	–	–
2757.33	Output torque, in-lb	14870	**14870**	14870	14870	**14870**	14870	14870	**14870**	14870	14870	**14870**	14870	–	–	–
	OHL input shaft	(A)	(A)	(A)	(A)	(A)	(A)	(A)	**(A)**	**(A)**	**(A)**	**(A)**	**(A)**	–	–	–
	OHL output shaft **(B)**	4856	**4856**	4856	4856	**4856**	4856	4856	**4856**	4856	4856	**4856**	4856	–	–	–
	Output RPM	1.21	**0.61**	0.41	1.21	**0.61**	0.41	1.21	**0.61**	0.41	1.21	**0.61**	0.41	1.21	**0.61**	0.41
	Input Hp (max) **(C)**	0.28	**0.14**	0.10	0.28	**0.14**	0.10	0.28	**0.14**	0.10	0.28	**0.14**	0.10	0.28	**0.14**	0.10
2858.50	Output torque, in-lb	14870	**14870**	14870	14870	**14870**	14870	14870	**14870**	14870	14870	**14870**	14870	14870	**14870**	14870
	OHL input shaft	(A)	(A)	(A)	(A)	(A)	(A)	(A)	(A)	(A)	(A)	(A)	(A)	(A)	(A)	(A)
	OHL output shaft **(B)**	4856	**4856**	4856	4856	**4856**	4856	4856	**4856**	4856	4856	**4856**	4856	4856	**4856**	4856
	Output RPM	1.09	**0.55**	0.37	1.09	**0.55**	0.37	1.09	**0.55**	0.37	1.09	**0.55**	0.37	–	–	–
	Input Hp (max) **(C)**	0.26	**0.13**	0.09	0.26	**0.13**	0.09	0.26	**0.13**	0.09	0.26	**0.13**	0.09	–	–	–
3170.87	Output torque, in-lb	14870	**14870**	14870	14870	**14870**	14870	14870	**14870**	14870	14870	**14870**	14870	–	–	–
	OHL input shaft	(A)	(A)	(A)	(A)	(A)	(A)	(A)	(A)	(A)	(A)	(A)	**(A)**	–	–	–
	OHL output shaft **(B)**	4856	**4856**	4856	4856	**4856**	4856	4856	**4856**	4856	4856	**4856**	4856	–	–	–
	Output RPM	1.06	**0.54**	0.36	1.06	**0.54**	0.36	1.06	**0.54**	0.36	1.06	**0.54**	0.36	1.06	**0.54**	0.36
	Input Hp (max) **(C)**	0.25	**0.13**	0.08	0.25	**0.13**	0.08	0.25	**0.13**	0.08	0.25	**0.13**	0.08	0.25	**0.13**	0.08
3256.89	Output torque, in-lb	14870	**14870**	14870	14870	**14870**	14870	14870	**14870**	14870	14870	**14870**	14870	14870	**14870**	14870
	OHL input shaft	(A)	(A)	(A)	(A)	(A)	(A)	(A)	(A)	(A)	(A)	(A)	(A)	(A)	(A)	(A)
	OHL output shaft **(B)**	4856	**4856**	4856	4856	**4856**	4856	4856	**4856**	4856	4856	**4856**	4856	4856	**4856**	4856
	Output RPM	0.94	**0.48**	0.32	0.94	**0.48**	0.32	0.94	**0.48**	0.32	0.94	**0.48**	0.32	0.94	**0.48**	0.32
	Input Hp (max) **(C)**	0.22	**0.11**	0.07	0.22	**0.11**	0.07	0.22	**0.11**	0.07	0.22	**0.11**	0.07	0.22	**0.11**	0.07
3680.02	Output torque, in-lb	14870	**14870**	14870	14870	**14870**	14870	14870	**14870**	14870	14870	**14870**	14870	14870	**14870**	14870
	OHL input shaft	(A)	(A)	(A)	(A)	(A)	(A)	(A)	(A)	(A)	(A)	(A)	(A)	(A)	(A)	(A)
	OHL output shaft **(B)**	4856	**4856**	4856	4856	**4856**	4856	4856	**4856**	4856	4856	**4856**	4856	4856	**4856**	4856
	Output RPM	0.92	**0.47**	0.31	0.92	**0.47**	0.31	0.92	**0.47**	0.31	0.92	**0.47**	0.31	0.92	**0.47**	0.31
	Input Hp (max) **(C)**	0.22	**0.11**	0.07	0.22	**0.11**	0.07	0.22	**0.11**	0.07	0.22	**0.11**	0.07	0.22	**0.11**	0.07
3749.38	Output torque, in-lb	14870	**14870**	14870	14870	**14870**	14870	14870	**14870**	14870	14870	**14870**	14870	14870	**14870**	14870
	OHL input shaft	(A)	(A)	(A)	(A)	(A)	(A)	(A)	(A)	(A)	(A)	(A)	(A)	(A)	(A)	(A)
	OHL output shaft **(B)**	4856	**4856**	4856	4856	**4856**	4856	4856	**4856**	4856	4856	**4856**	4856	4856	**4856**	4856
	Output RPM	0.86	**0.44**	0.29	0.86	**0.44**	0.29	0.86	**0.44**	0.29	0.86	**0.44**	0.29	0.86	**0.44**	0.29
	Input Hp (max) **(C)**	0.20	**0.10**	0.07	0.20	**0.10**	0.07	0.20	**0.10**	0.07	0.20	**0.10**	0.07	0.20	**0.10**	0.07
4019.49	Output torque, in-lb	14870	**14870**	14870	14870	**14870**	14870	14870	**14870**	14870	14870	**14870**	14870	14870	**14870**	14870
	OHL input shaft	(A)	(A)	(A)	(A)	(A)	(A)	(A)	(A)	(A)	(A)	(A)	(A)	(A)	(A)	(A)
	OHL output shaft **(B)**	4856	**4856**	4856	4856	**4856**	4856	4856	**4856**	4856	4856	**4856**	4856	4856	**4856**	4856
	Output RPM	0.81	**0.41**	0.27	0.81	**0.41**	0.27	0.81	**0.41**	0.27	–	–	–	–	–	–
	Input Hp (max) **(C)**	0.19	**0.10**	0.06	0.19	**0.10**	0.06	0.19	**0.10**	0.06	–	–	–	–	–	–
4233.69	Output torque, in-lb	14870	**14870**	14870	14870	**14870**	14870	14870	**14870**	14870	–	–	–	–	–	–
	OHL input shaft	(A)	**(A)**	**(A)**	**(A)**	**(A)**	**(A)**	**(A)**	**(A)**	**(A)**	–	–	–	–	–	–
	OHL output shaft **(B)**	4856	**4856**	4856	4856	**4856**	4856	4856	**4856**	4856	–	–	–	–	–	–

Service factor: 1.0

(A) (B) (C) - See footnotes page on inside back cover

Blank areas (-) indicate configuration not available

ILH 88

Size: H_885

Five-stage – Clamp collar, three-piece coupled, separate

NEMA motor frame		56C			—			140TC			180TC			—		
IEC motor frame		71D			80D			90D			100D			112D		
Separate group		71			80			90			100			112		
Ratio	**Output Rating data**	**3450**	**1750**	**1160**	**3450**	**1750**	**1160**	**3450**	**1750**	**1160**	**3450**	**1750**	**1160**	**3450**	**1750**	**1160**
	Output RPM	0.72	**0.36**	0.24	0.72	**0.36**	0.24	0.72	**0.36**	0.24	–	–	–	–	–	–
	Input Hp (max) **(C)**	0.17	**0.09**	0.06	0.17	**0.09**	0.06	0.17	**0.09**	0.06	–	–	–	–	–	–
4810.02	Output torque, in-lb	14870	**14870**	14870	14870	**14870**	14870	14870	**14870**	14870	–	–	–	–	–	–
	OHL input shaft	**(A)**	**(A)**	**(A)**	**(A)**	**(A)**	**(A)**	**(A)**	**(A)**	**(A)**	–	–	–	–	–	–
	OHL output shaft **(B)**	4856	**4856**	4856	4856	**4856**	4856	4856	**4856**	4856	–	–	–	–	–	–
	Output RPM	0.64	**0.32**	0.21	0.64	**0.32**	0.21	0.64	**0.32**	0.21	–	–	–	–	–	–
	Input Hp (max) **(C)**	0.15	**0.08**	0.05	0.15	**0.08**	0.05	0.15	**0.08**	0.05	–	–	–	–	–	–
5423.82	Output torque, in-lb	14870	**14870**	14870	14870	**14870**	14870	14870	**14870**	14870	–	–	–	–	–	–
	OHL input shaft	(A)	(A)	(A)	**(A)**	**(A)**	**(A)**	**(A)**	**(A)**	**(A)**	–	–	–	–	–	–
	OHL output shaft **(B)**	4856	**4856**	4856	4856	**4856**	4856	4856	**4856**	4856	–	–	–	–	–	–
	Output RPM	0.56	**0.29**	0.19	0.56	**0.29**	0.19	0.56	**0.29**	0.19	0.56	**0.29**	0.19	–	–	–
	Input Hp (max) **(C)**	0.13	**0.07**	0.04	0.13	**0.07**	0.04	0.13	**0.07**	0.04	0.13	**0.07**	0.04	–	–	–
6140.01	Output torque, in-lb	14870	**14870**	14870	14870	**14870**	14870	14870	**14870**	14870	14870	**14870**	14870	–	–	–
	OHL input shaft	**(A)**	**(A)**	**(A)**	**(A)**	**(A)**	**(A)**	**(A)**	**(A)**	**(A)**	**(A)**	**(A)**	**(A)**	–	–	–
	OHL output shaft **(B)**	4856	**4856**	4856	4856	**4856**	4856	4856	**4856**	4856	4856	**4856**	4856	–	–	–
	Output RPM	0.49	**0.25**	0.17	0.49	**0.25**	0.17	0.49	**0.25**	0.17	0.49	**0.25**	0.17	–	–	–
	Input Hp (max) **(C)**	0.12	**0.06**	0.04	0.12	**0.06**	0.04	0.12	**0.06**	0.04	0.12	**0.06**	0.04	–	–	–
7020.89	Output torque, in-lb	14870	**14870**	14870	14870	**14870**	14870	14870	**14870**	14870	14870	**14870**	14870	–	–	–
	OHL input shaft	(A)	(A)	(A)	(A)	(A)	(A)	(A)	(A)	**(A)**	**(A)**	**(A)**	**(A)**	–	–	–
	OHL output shaft **(B)**	4856	**4856**	4856	4856	**4856**	4856	4856	**4856**	4856	4856	**4856**	4856	–	–	–

Service factor: 1.0

(A) (B) (C) - See footnotes page on inside back cover

Blank areas (-) indicate configuration not available

ILH 108

Size: H_1082

Double reduction – Clamp collar, three-piece coupled, separate

NEMA motor frame		—			210TC			250TC			280TC					320TC
IEC motor frame		112D			132D			160D			180D/200D					—
Separate group		112			132			160			180					—
Ratio	Output Rating data	3450	1750	1160	3450	1750	1160	3450	1750	1160	3450	1750	1160	3450	1750	1160
	Output RPM	–	–	–	626	**318**	211	626	**318**	211	626	**318**	211	626	**318**	211
	Input Hp (max) **(C)**	–	–	–	64.51	**32.72**	21.69	89.59	**45.44**	30.12	139.62	**75.54**	50.76	139.62	**75.54**	50.76
5.51	Output torque, in-lb	–	–	–	6493	**6493**	6493	9018	**9018**	9018	14054	**14990**	15195	14054	**14990**	15195
	OHL input shaft	–	–	–	**(A)**	**949**	988	**(A)**	**1473**	1584	**(A)**	**1695**	2041	(A)	**1695**	2041
	OHL output shaft **(B)**	–	–	–	**(A)**	**3312**	3705	**(A)**	**3312**	3705	**(A)**	**3312**	3705	(A)	**3312**	3705
	Output RPM	–	–	–	538	**273**	181	538	**273**	181	538	**273**	181	538	**273**	181
	Input Hp (max) **(C)**	–	–	–	64.52	**32.73**	21.69	89.60	**45.45**	30.13	124.69	**67.46**	45.32	124.69	**67.46**	45.32
6.41	Output torque, in-lb	–	–	–	7555	**7555**	7555	10492	**10492**	10492	14601	**15573**	15785	14601	**15573**	15785
	OHL input shaft	–	–	–	**(A)**	**948**	987	**(A)**	**1440**	1577	**(A)**	**1714**	2062	(A)	**1714**	2062
	OHL output shaft **(B)**	–	–	–	**(A)**	**3312**	3705	**(A)**	**3312**	3705	**(A)**	**3312**	3705	(A)	**3312**	3705
	Output RPM	486	**246**	163	486	**246**	163	486	**246**	163	486	**246**	163	486	**246**	163
	Input Hp (max) **(C)**	27.35	**13.87**	9.19	64.55	**32.75**	21.71	89.65	**45.47**	30.14	115.29	**62.38**	41.35	115.29	**62.38**	41.35
7.10	Output torque, in-lb	3547	**3547**	3547	8373	**8373**	8373	11628	**11628**	11628	14954	**15950**	15950	14954	**15950**	15950
	OHL input shaft	**(A)**	**838**	873	**(A)**	**943**	984	**(A)**	**1412**	1585	**(A)**	**1724**	2081	(A)	**1724**	2081
	OHL output shaft **(B)**	**(A)**	**3705**	3705	**(A)**	**3705**	3705	**(A)**	**3705**	3705	**(A)**	**3705**	3705	(A)	**3705**	3705
	Output RPM	–	–	–	417	**212**	140	417	**212**	140	417	**212**	140	417	**212**	140
	Input Hp (max) **(C)**	–	–	–	64.56	**32.75**	21.71	89.66	**45.48**	30.15	146.32	**92.12**	61.06	143.32	**92.12**	61.06
8.27	Output torque, in-lb	–	–	–	9753	**9753**	9753	13545	**13545**	13545	22105	**27438**	27438	22105	**27438**	27438
	OHL input shaft	–	–	–	**(A)**	**949**	988	**(A)**	**1473**	1584	**(A)**	**1518**	1891	(A)	**1518**	1891
	OHL output shaft **(B)**	–	–	–	**(A)**	**3705**	4037	**(A)**	**3705**	4037	**(A)**	**3705**	4037	(A)	**3705**	4037
	Output RPM	–	–	–	359	**182**	121	359	**182**	121	359	**182**	121	359	**182**	121
	Input Hp (max) **(C)**	–	–	–	64.57	**32.75**	21.71	89.67	**45.49**	30.15	132.90	**79.20**	52.50	132.90	**79.20**	52.50
9.62	Output torque, in-lb	–	–	–	11348	**11348**	11348	15759	**15759**	15759	23356	**27438**	27438	23356	**27438**	27438
	OHL input shaft	–	–	–	**(A)**	**948**	987	**(A)**	**1439**	1577	**(A)**	**1588**	1945	(A)	**1588**	1945
	OHL output shaft **(B)**	–	–	–	3312	**3705**	4037	3312	**3705**	4037	3312	**3705**	4037	3312	**3705**	4037
	Output RPM	323	**164**	109	323	**164**	109	323	**164**	109	323	**164**	109	323	**164**	109
	Input Hp (max) **(C)**	27.33	**13.86**	9.19	64.52	**32.73**	21.69	89.61	**45.45**	30.13	124.28	**71.40**	47.33	124.28	**71.40**	47.33
10.67	Output torque, in-lb	5327	**5327**	5327	12577	**12577**	12577	17466	**17466**	17466	24224	**27438**	27438	24224	**27438**	27438
	OHL input shaft	**(A)**	**838**	873	**(A)**	**943**	984	**(A)**	**1413**	1585	**(A)**	**1621**	1978	(A)	**1621**	1978
	OHL output shaft **(B)**	3312	**3705**	4037	3312	**3705**	4037	3312	**3705**	4037	3312	**3705**	4037	3312	**3705**	4037
	Output RPM	272	**138**	91	272	**138**	91	272	**138**	91	272	**138**	91	272	**138**	91
	Input Hp (max) **(C)**	27.33	**13.86**	9.19	64.36	**32.73**	21.69	84.97	**45.45**	30.13	111.07	**60.08**	39.83	111.07	**60.08**	39.83
12.68	Output torque, in-lb	6331	**6331**	6331	14908	**14945**	14945	19682	**20755**	20755	25729	**27438**	27438	25729	**27438**	27438
	OHL input shaft	**(A)**	**843**	869	**(A)**	**949**	988	**(A)**	**1360**	1578	**(A)**	**1668**	2024	(A)	**1668**	2024
	OHL output shaft **(B)**	3312	**4037**	4288	3312	**4037**	4288	3312	**4037**	4288	3312	**4037**	4288	3312	**4037**	4288
	Output RPM	236	**120**	79	236	**120**	79	236	**120**	79	236	**120**	79	236	**120**	79
	Input Hp (max) **(C)**	27.34	**13.87**	9.19	62.19	**32.74**	21.70	79.92	**43.55**	28.97	100.19	**52.08**	34.52	100.19	**52.08**	34.52
14.63	Output torque, in-lb	7306	**7306**	7306	16620	**17248**	17248	21360	**22945**	23024	26776	**27438**	27438	26776	**27438**	27438
	OHL input shaft	**(A)**	**843**	877	**(A)**	**951**	983	**(A)**	**1332**	1588	**(A)**	**1702**	2060	(A)	**1702**	2060
	OHL output shaft **(B)**	3705	**4037**	4288	3705	**4037**	4288	3705	**4037**	4288	3705	**4037**	4288	3705	**4037**	4288
	Output RPM	201	**102**	67	201	**102**	67	201	**102**	67	201	**102**	67	201	**102**	67
	Input Hp (max) **(C)**	27.34	**13.87**	9.19	59.33	**31.85**	21.45	74.14	**40.41**	26.87	87.37	**44.32**	29.38	87.37	**44.32**	29.38
17.19	Output torque, in-lb	8585	**8585**	8585	18631	**19720**	20034	23282	**25015**	25098	27438	**27438**	27438	27438	**27438**	27438
	OHL input shaft	**(A)**	**842**	877	**(A)**	**951**	989	**(A)**	**1266**	1585	**(A)**	**1734**	2092	(A)	**1734**	2092
	OHL output shaft **(B)**	3705	**4037**	4288	3705	**4037**	4288	3705	**4037**	4288	3705	**4037**	4288	3705	**4037**	4288
	Output RPM	177	**90**	60	177	**90**	60	177	**90**	60	177	**90**	60	–	–	–
	Input Hp (max) **(C)**	27.34	**13.87**	9.19	56.88	**30.54**	20.57	69.86	**38.07**	25.32	77.10	**39.11**	25.92	–	–	–
19.48	Output torque, in-lb	9728	**9728**	9728	20243	**21426**	21771	24860	**26711**	26801	27438	**27438**	27438	–	–	–
	OHL input shaft	**(A)**	**839**	874	**(A)**	**935**	988	**(A)**	**1199**	1567	**(A)**	**1756**	2113	–	–	–
	OHL output shaft **(B)**	3705	**4288**	5138	3705	**4288**	5138	3705	**4288**	5138	3705	**4288**	5138	–	–	–
	Output RPM	151	**77**	51	151	**77**	51	151	**77**	51	151	**77**	51	–	–	–
	Input Hp (max) **(C)**	27.34	**13.87**	9.19	51.23	**28.78**	19.38	64.94	**33.33**	22.09	65.70	**33.33**	22.09	–	–	–
22.86	Output torque, in-lb	11416	**11416**	11416	21395	**23697**	24068	27119	**27438**	27438	27438	**27438**	27438	–	–	–
	OHL input shaft	**(A)**	**840**	869	**(A)**	**646**	983	**(A)**	**1206**	1575	**(A)**	**1779**	2137	–	–	–
	OHL output shaft **(B)**	4037	**4288**	5138	4037	**4288**	5138	4037	**4288**	5138	4037	**4288**	5138	–	–	–

Service factor: 1.0

(A) (B) (C) - See footnotes page on inside back cover

Blank areas (-) indicate configuration not available

ILH 108

Size: H_1082

Double reduction – Clamp collar, three-piece coupled, separate

NEMA motor frame		—			210TC			250TC			280TC					320TC
IEC motor frame		112D			132D			160D			180D/200D					—
Separate group		112			132			160			180					—
Ratio	Output Rating data	3450	1750	1160	3450	1750	1160	3450	1750	1160	3450	1750	1160	3450	1750	1160
	Output RPM	138	**70**	47	138	**70**	47	138	**70**	47	138	**70**	47	–	–	–
	Input Hp (max) **(C)**	27.17	**13.87**	9.19	47.69	**27.82**	18.74	60.22	**30.55**	20.25	60.22	**30.55**	20.25	–	–	–
24.94	Output torque, in-lb	12381	**12454**	12454	21728	**24992**	25389	27438	**27438**	27438	27438	**27438**	27438	–	–	–
	OHL input shaft	**(A)**	**756**	873	**(A)**	**480**	991	**(A)**	**1235**	1584	**(A)**	**1791**	2147	–	–	–
	OHL output shaft **(B)**	4037	**4288**	5138	4037	**4288**	5138	4037	**4288**	5138	4037	**4288**	5138	–	–	–
	Output RPM	127	**64**	43	127	**64**	43	127	**64**	43	127	**64**	43	–	–	–
	Input Hp (max) **(C)**	26.07	**13.87**	9.19	44.37	**26.98**	18.17	55.13	**27.96**	18.54	55.13	**27.96**	18.54	–	–	–
27.20	Output torque, in-lb	12955	**13585**	13585	22049	**26426**	26846	27394	**27394**	27394	27394	**27394**	27394	–	–	–
	OHL input shaft	**(A)**	**611**	869	**(A)**	**286**	944	**(A)**	**1262**	1580	**(A)**	**1802**	2159	–	–	–
	OHL output shaft **(B)**	4037	**4288**	5138	4037	**4288**	5138	4037	**4288**	5138	4037	**4288**	5138	–	–	–
	Output RPM	118	**60**	40	118	**60**	40	118	**60**	40	118	**60**	40	–	–	–
	Input Hp (max) **(C)**	25.11	**13.44**	9.08	41.60	**25.65**	17.21	51.17	**25.96**	17.21	51.17	**25.96**	17.21	–	–	–
29.35	Output torque, in-lb	13463	**14205**	14477	22307	**27110**	27438	27438	**27438**	27438	27438	**27438**	27438	–	–	–
	OHL input shaft	**(A)**	**544**	876	**(A)**	**221**	896	**(A)**	**1281**	1583	**(A)**	**1809**	2166	–	–	–
	OHL output shaft **(B)**	4037	**5138**	5138	4037	**5138**	5138	4037	**5138**	5138	4037	**5138**	5138	–	–	–
	Output RPM	105	**53**	35	105	**53**	35	105	**53**	35	–	–	–	–	–	–
	Input Hp (max) **(C)**	23.72	**12.70**	8.58	37.81	**23.22**	15.39	45.78	**23.22**	15.39	–	–	–	–	–	–
32.81	Output torque, in-lb	14219	**15004**	15292	22664	**27437**	27437	27437	**27437**	27437	–	–	–	–	–	–
	OHL input shaft	**(A)**	**459**	813	**(A)**	**240**	975	**(A)**	**1307**	1580	–	–	–	–	–	–
	OHL output shaft **(B)**	4037	**5138**	6261	4037	**5138**	6261	4037	**5138**	6261	–	–	–	–	–	–
	Output RPM	98	**50**	33	98	**50**	33	98	**50**	33	–	–	–	–	–	–
	Input Hp (max) **(C)**	22.37	**12.30**	8.31	35.62	**21.68**	14.37	42.74	**21.68**	14.37	–	–	–	–	–	–
35.14	Output torque, in-lb	14358	**15560**	15858	22869	**27438**	27438	27438	**27438**	27438	–	–	–	–	–	–
	OHL input shaft	**(A)**	**399**	750	**(A)**	**283**	987	**(A)**	**1323**	1583	–	–	–	–	–	–
	OHL output shaft **(B)**	4288	**5138**	6261	4288	**5138**	6261	4288	**5138**	6261	–	–	–	–	–	–
	Output RPM	91	**46**	31	91	**46**	31	–	–	–	–	–	–	–	–	–
	Input Hp (max) **(C)**	20.99	**11.88**	8.03	33.43	**20.16**	13.36	–	–	–	–	–	–	–	–	–
37.79	Output torque, in-lb	14489	**16170**	16481	23081	**27438**	27438	–	–	–	–	–	–	–	–	–
	OHL input shaft	**(A)**	**330**	680	**(A)**	**325**	989	–	–	–	–	–	–	–	–	–
	OHL output shaft **(B)**	4288	**5138**	6261	4288	**5138**	6261	–	–	–	–	–	–	–	–	–
	Output RPM	85	**43**	28	85	**43**	28	–	–	–	–	–	–	–	–	–
	Input Hp (max) **(C)**	19.61	**11.50**	7.77	31.23	**18.66**	12.37	–	–	–	–	–	–	–	–	–
40.82	Output torque, in-lb	14626	**16900**	17224	23286	**27438**	27438	–	–	–	–	–	–	–	–	–
	OHL input shaft	**(A)**	**248**	594	**(A)**	**368**	991	–	–	–	–	–	–	–	–	–
	OHL output shaft **(B)**	4288	**5138**	6261	4288	**5138**	6261	–	–	–	–	–	–	–	–	–
	Output RPM	78	**39**	26	78	**39**	26	–	–	–	–	–	–	–	–	–
	Input Hp (max) **(C)**	18.24	**11.12**	7.51	29.03	**17.19**	11.40	–	–	–	–	–	–	–	–	–
44.31	Output torque, in-lb	14761	**17748**	18089	23497	**27438**	27438	–	–	–	–	–	–	–	–	–
	OHL input shaft	**(A)**	**147**	496	**(A)**	**409**	993	–	–	–	–	–	–	–	–	–
	OHL output shaft **(B)**	4288	**6261**	6261	4288	**6261**	6261	–	–	–	–	–	–	–	–	–
	Output RPM	71	**36**	24	71	**36**	24	–	–	–	–	–	–	–	–	–
	Input Hp (max) **(C)**	16.86	**10.36**	7.12	24.98	**15.75**	9.28	–	–	–	–	–	–	–	–	–
48.38	Output torque, in-lb	14897	**18052**	18727	22080	**27438**	24389	–	–	–	–	–	–	–	–	–
	OHL input shaft	**(A)**	**126**	428	**(A)**	**446**	990	–	–	–	–	–	–	–	–	–
	OHL output shaft **(B)**	4288	**6261**	7343	4288	**6261**	7343	–	–	–	–	–	–	–	–	–

Service factor: 1.0

(A) (B) (C) - See footnotes page on inside back cover

Blank areas (-) indicate configuration not available

ILH 108

Size: H_1083

Triple reduction – Clamp collar, three-piece coupled, separate

NEMA motor frame		—			140TC			180TC			—			210TC			250TC		
IEC motor frame		80D			90D			100D			112D			132D			160D		
Separate group		80			90			100			112			132			160		
Ratio	Output Rating data	3450	1750	1160	3450	1750	1160	3450	1750	1160	3450	1750	1160	3450	1750	1160	3450	1750	1160
	Output RPM	–	–	–	–	–	–	–	–	–	81	41	27	81	41	27	81	41	27
	Input Hp (max) (C)	–	–	–	–	–	–	–	–	–	27.34	13.87	9.19	29.23	17.88	11.85	29.23	17.88	11.85
42.61	Output torque, in-lb	–	–	–	–	–	–	–	–	–	21283	21283	21283	22749	27438	27438	22749	27438	27438
	OHL input shaft	–	–	–	–	–	–	–	–	–	(A)	838	873	(A)	950	990	(A)	1530	1594
	OHL output shaft (B)	–	–	–	–	–	–	–	–	–	4288	5138	6261	4288	5138	6261	4288	5138	6261
	Output RPM	–	–	–	–	–	–	66	34	22	66	34	22	66	34	22	66	34	22
	Input Hp (max) (C)	–	–	–	–	–	–	20.42	10.36	6.87	25.76	13.87	9.19	25.76	14.66	9.72	25.76	14.66	9.72
51.97	Output torque, in-lb	–	–	–	–	–	–	19387	19387	19387	24460	25958	25958	24460	27438	27438	24460	27438	27438
	OHL input shaft	–	–	–	–	–	–	(A)	713	742	(A)	843	868	(A)	955	994	(A)	1533	1596
	OHL output shaft (B)	–	–	–	–	–	–	4288	6261	7343	4288	6261	7343	4288	6261	7343	4288	6261	7343
	Output RPM	–	–	–	–	–	–	57	29	19	57	29	19	57	29	19	57	29	19
	Input Hp (max) (C)	–	–	–	–	–	–	20.42	10.36	6.87	23.06	12.51	8.29	23.06	12.51	8.29	23.06	12.51	8.29
60.90	Output torque, in-lb	–	–	–	–	–	–	22716	22716	22716	25651	27438	27438	25651	27438	27438	25651	27438	27438
	OHL input shaft	–	–	–	–	–	–	(A)	713	742	(A)	835	870	(A)	957	996	(A)	1534	1597
	OHL output shaft (B)	–	–	–	–	–	–	5138	6261	7343	5138	6261	7343	5138	6261	7343	5138	6261	7343
	Output RPM	48	24	16	48	24	16	48	24	16	48	24	16	48	24	16	–	–	–
	Input Hp (max) (C)	4.84	2.46	1.63	9.86	5.00	3.32	20.42	10.36	6.87	20.59	10.64	7.05	20.59	10.64	7.05	–	–	–
71.59	Output torque, in-lb	6336	6336	6336	12899	12899	12899	26703	26703	26703	26927	27438	27438	26927	27438	27438	–	–	–
	OHL input shaft	(A)	346	360	(A)	452	470	(A)	711	740	(A)	839	874	(A)	958	997	–	–	–
	OHL output shaft (B)	5138	7343	7343	5138	7343	7343	5138	7343	7343	5138	7343	7343	5138	7343	7343	–	–	–
	Output RPM	42	21	14	42	21	14	42	21	14	42	21	14	42	21	14	–	–	–
	Input Hp (max) (C)	4.84	2.46	1.63	9.86	5.00	3.32	18.29	9.28	6.15	18.29	9.28	6.15	18.29	9.28	6.15	–	–	–
82.14	Output torque, in-lb	7270	7270	7270	14799	14799	14799	27438	27438	27438	27438	27438	27438	27438	27438	27438	–	–	–
	OHL input shaft	(A)	346	360	(A)	453	472	(A)	712	741	(A)	838	872	(A)	958	997	–	–	–
	OHL output shaft (B)	5138	7343	7343	5138	7343	7343	5138	7343	7343	5138	7343	7343	5138	7343	7343	–	–	–
	Output RPM	36	18	12	36	18	12	36	18	12	36	18	12	36	18	12	–	–	–
	Input Hp (max) (C)	4.85	2.46	1.63	9.86	5.00	3.32	15.49	7.86	5.21	15.49	7.86	5.21	15.49	7.86	5.21	–	–	–
96.94	Output torque, in-lb	8580	8580	8580	17467	17467	17467	27438	27438	27438	27438	27438	27438	27438	27438	27438	–	–	–
	OHL input shaft	(A)	346	360	(A)	456	474	(A)	713	743	(A)	841	875	(A)	958	998	–	–	–
	OHL output shaft (B)	6261	7343	7343	6261	7343	7343	6261	7343	7343	6261	7343	7343	6261	7343	7343	–	–	–
	Output RPM	33	17	11	33	17	11	33	17	11	33	17	11	33	17	11	–	–	–
	Input Hp (max) (C)	4.84	2.46	1.63	9.86	5.00	3.32	14.29	7.25	4.81	14.29	7.25	4.81	14.29	7.25	4.81	–	–	–
105.08	Output torque, in-lb	9300	9300	9300	18933	18933	18933	27438	27438	27438	27438	27438	27438	27438	27438	27438	–	–	–
	OHL input shaft	(A)	346	360	(A)	456	474	(A)	714	743	(A)	842	876	(A)	959	998	–	–	–
	OHL output shaft (B)	6261	7343	7343	6261	7343	7343	6261	7343	7343	6261	7343	7343	6261	7343	7343	–	–	–
	Output RPM	30	15	10	30	15	10	30	15	10	30	15	10	30	15	10	–	–	–
	Input Hp (max) (C)	4.84	2.46	1.63	9.86	5.00	3.32	12.86	6.52	4.32	12.86	6.52	4.32	12.86	6.52	4.32	–	–	–
116.83	Output torque, in-lb	10340	10340	10340	21050	21050	21050	27438	27438	27438	27438	27438	27438	27438	27438	27438	–	–	–
	OHL input shaft	(A)	346	360	(A)	456	474	(A)	714	736	(A)	843	877	(A)	959	998	–	–	–
	OHL output shaft (B)	6261	7343	7343	6261	7343	7343	6261	7343	7343	6261	7343	7343	6261	7343	7343	–	–	–
	Output RPM	27	14	9	27	14	9	27	14	9	27	14	9	27	14	9	–	–	–
	Input Hp (max) (C)	4.85	2.46	1.63	9.86	5.00	3.32	11.84	6.00	3.98	11.84	6.00	3.98	11.84	6.00	3.98	–	–	–
126.90	Output torque, in-lb	11232	11232	11232	22865	22865	22865	27438	27438	27438	27438	27438	27438	27438	27438	27438	–	–	–
	OHL input shaft	(A)	346	360	(A)	455	473	(A)	708	738	(A)	843	878	(A)	959	998	–	–	–
	OHL output shaft (B)	6261	7343	7343	6261	7343	7343	6261	7343	7343	6261	7343	7343	6261	7343	7343	–	–	–
	Output RPM	25	12	8	25	12	8	25	12	8	25	12	8	–	–	–	–	–	–
	Input Hp (max) (C)	4.85	2.46	1.63	9.86	5.00	3.32	10.70	5.43	3.60	10.70	5.43	3.60	–	–	–	–	–	–
140.37	Output torque, in-lb	12424	12424	12424	25292	25292	25292	27438	27438	27438	27438	27438	27438	–	–	–	–	–	–
	OHL input shaft	(A)	346	360	(A)	453	472	(A)	710	736	(A)	844	878	–	–	–	–	–	–
	OHL output shaft (B)	7343	7343	7343	7343	7343	7343	7343	7343	7343	7343	7343	7343	–	–	–	–	–	–
	Output RPM	23	12	8	23	12	8	23	12	8	–	–	–	–	–	–	–	–	–
	Input Hp (max) (C)	4.84	2.46	1.63	9.63	5.00	3.32	9.97	5.06	3.35	–	–	–	–	–	–	–	–	–
150.70	Output torque, in-lb	13338	13338	13338	26520	27153	27153	27438	27438	27438	–	–	–	–	–	–	–	–	–
	OHL input shaft	(A)	346	360	(A)	454	470	(A)	708	738	–	–	–	–	–	–	–	–	–
	OHL output shaft (B)	7343	7343	7343	7343	7343	7343	7343	7343	7343	–	–	–	–	–	–	–	–	–

Service factor: 1.0

(A) (B) (C) - See footnotes page on inside back cover

Blank areas (-) indicate configuration not available

ILH 108

Size: H_1083

Triple reduction – Clamp collar, three-piece coupled, separate

NEMA motor frame		—			140TC			180TC			—			210TC			250TC		
IEC motor frame		80D			90D			100D			112D			132D			160D		
Separate group		80			90			100			112			132			160		
Ratio	Output Rating data	3450	1750	1160	3450	1750	1160	3450	1750	1160	3450	1750	1160	3450	1750	1160	3450	1750	1160
	Output RPM	21	**11**	7	21	**11**	7	21	**11**	7	–	–	–	–	–	–	–	–	–
	Input Hp (max) **(C)**	4.85	**2.46**	1.63	9.25	**4.69**	3.11	9.25	**4.69**	3.11	–	–	–	–	–	–	–	–	–
162.40	Output torque, in-lb	14374	**14374**	14374	27438	**27438**	27438	27438	**27438**	27438	–	–	–	–	–	–	–	–	–
	OHL input shaft	**(A)**	**346**	360	**(A)**	**453**	471	**(A)**	**710**	739	–	–	–	–	–	–	–	–	–
	OHL output shaft **(B)**	7343	**7343**	7343	7343	**7343**	7343	7343	**7343**	7343	–	–	–	–	–	–	–	–	–
	Output RPM	20	**10**	7	20	**10**	7	20	**10**	7	–	–	–	–	–	–	–	–	–
	Input Hp (max) **(C)**	4.84	**2.46**	1.63	8.54	**4.33**	2.87	8.54	**4.33**	2.87	–	–	–	–	–	–	–	–	–
175.78	Output torque, in-lb	15558	**15558**	15558	27438	**27438**	27438	27438	**27438**	27438	–	–	–	–	–	–	–	–	–
	OHL input shaft	**(A)**	**345**	359	**(A)**	**453**	470	**(A)**	**711**	740	–	–	–	–	–	–	–	–	–
	OHL output shaft **(B)**	7343	**7343**	7343	7343	**7343**	7343	7343	**7343**	7343	–	–	–	–	–	–	–	–	–
	Output RPM	18	**9**	6	18	**9**	6	18	**9**	6	–	–	–	–	–	–	–	–	–
	Input Hp (max) **(C)**	4.85	**2.46**	1.63	7.86	**3.98**	2.64	7.86	**3.98**	2.64	–	–	–	–	–	–	–	–	–
191.21	Output torque, in-lb	16924	**16924**	16924	27438	**27438**	27438	27438	**27438**	27438	–	–	–	–	–	–	–	–	–
	OHL input shaft	**(A)**	**345**	359	**(A)**	**453**	470	**(A)**	**712**	741	–	–	–	–	–	–	–	–	–
	OHL output shaft **(B)**	7343	**7343**	7343	7343	**7343**	7343	7343	**7343**	7343	–	–	–	–	–	–	–	–	–
	Output RPM	16	**8**	6	16	**8**	6	16	**8**	6	–	–	–	–	–	–	–	–	–
	Input Hp (max) **(C)**	4.85	**2.46**	1.63	7.18	**3.64**	2.41	7.18	**3.64**	2.41	–	–	–	–	–	–	–	–	–
209.21	Output torque, in-lb	18518	**18518**	18518	27438	**27438**	27438	27438	**27438**	27438	–	–	–	–	–	–	–	–	–
	OHL input shaft	**(A)**	**345**	358	**(A)**	**452**	474	**(A)**	**712**	741	–	–	–	–	–	–	–	–	–
	OHL output shaft **(B)**	7343	**7343**	7343	7343	**7343**	7343	7343	**7343**	7343	–	–	–	–	–	–	–	–	–
	Output RPM	15	**7**	5	15	**7**	5	15	**7**	5	–	–	–	–	–	–	–	–	–
	Input Hp (max) **(C)**	4.84	**2.46**	1.63	6.39	**3.24**	2.15	6.39	**3.24**	2.15	–	–	–	–	–	–	–	–	–
235.19	Output torque, in-lb	20816	**20816**	20816	27438	**27438**	27438	27438	**27438**	27438	–	–	–	–	–	–	–	–	–
	OHL input shaft	**(A)**	**343**	357	**(A)**	**456**	474	**(A)**	**713**	742	–	–	–	–	–	–	–	–	–
	OHL output shaft **(B)**	7343	**7343**	7343	7343	**7343**	7343	7343	**7343**	7343	–	–	–	–	–	–	–	–	–
	Output RPM	13	**7**	5	13	**7**	5	13	**7**	5	–	–	–	–	–	–	–	–	–
	Input Hp (max) **(C)**	4.60	**2.46**	1.63	5.85	**2.97**	1.97	5.85	**2.97**	1.97	–	–	–	–	–	–	–	–	–
256.86	Output torque, in-lb	21583	**22734**	22734	27438	**27438**	27438	27438	**27438**	27438	–	–	–	–	–	–	–	–	–
	OHL input shaft	**(A)**	**343**	356	**(A)**	**456**	474	**(A)**	**713**	742	–	–	–	–	–	–	–	–	–
	OHL output shaft **(B)**	7343	**7343**	7343	7343	**7343**	7343	7343	**7343**	7343	–	–	–	–	–	–	–	–	–
	Output RPM	12	**6**	4	12	**6**	4	12	**6**	4	–	–	–	–	–	–	–	–	–
	Input Hp (max) **(C)**	4.31	**2.37**	1.55	5.28	**2.68**	1.77	5.28	**2.68**	1.77	–	–	–	–	–	–	–	–	–
284.73	Output torque, in-lb	22424	**24314**	24048	27438	**27438**	27438	27438	**27438**	27438	–	–	–	–	–	–	–	–	–
	OHL input shaft	(A)	**343**	356	**(A)**	**(A)**	**(A)**	**(A)**	**714**	743	–	–	–	–	–	–	–	–	–
	OHL output shaft **(B)**	7343	**7343**	7343	7343	**7343**	7343	7343	**7343**	7343	–	–	–	–	–	–	–	–	–
	Output RPM	11	**5**	4	11	**5**	4	–	–	–	–	–	–	–	–	–	–	–	–
	Input Hp (max) **(C)**	3.94	**2.17**	1.42	4.62	**2.34**	1.55	–	–	–	–	–	–	–	–	–	–	–	–
325.21	Output torque, in-lb	23398	**25439**	25099	27438	**27438**	27438	–	–	–	–	–	–	–	–	–	–	–	–
	OHL input shaft	**(A)**	**343**	356	**(A)**	**(A)**	**(A)**	–	–	–	–	–	–	–	–	–	–	–	–
	OHL output shaft **(B)**	7343	**7343**	7343	7343	**7343**	7343	–	–	–	–	–	–	–	–	–	–	–	–
	Output RPM	10	**5**	3	10	**5**	3	–	–	–	–	–	–	–	–	–	–	–	–
	Input Hp (max) **(C)**	3.67	**2.03**	1.32	4.09	**2.12**	1.41	–	–	–	–	–	–	–	–	–	–	–	–
359.30	Output torque, in-lb	24070	**26218**	25826	26862	**27438**	27438	–	–	–	–	–	–	–	–	–	–	–	–
	OHL input shaft	**(A)**	**343**	357	**(A)**	**(A)**	**(A)**	–	–	–	–	–	–	–	–	–	–	–	–
	OHL output shaft **(B)**	7343	**7343**	7343	7343	**7343**	7343	–	–	–	–	–	–	–	–	–	–	–	–

Service factor: 1.0

(A) (B) (C) - See footnotes page on inside back cover

Blank areas (-) indicate configuration not available

ILH 108

Size: H_1084

Four-stage reduction – Clamp collar, three-piece coupled, separate

NEMA motor frame		56C			—			140TC			180TC			—		
IEC motor frame		71D			80D			90D			100D			112D		
Separate group		71			80			90			100			112		
Ratio	**Output Rating data**	**3450**	**1750**	**1160**	**3450**	**1750**	**1160**	**3450**	**1750**	**1160**	**3450**	**1750**	**1160**	**3450**	**1750**	**1160**
	Output RPM	13.62	**6.91**	4.58	13.62	**6.91**	4.58	13.62	**6.91**	4.58	13.62	**6.91**	4.58	13.62	**6.91**	4.58
	Input Hp (max) **(C)**	3.98	**2.02**	1.34	4.85	**2.46**	1.63	5.93	**3.01**	1.99	5.93	**3.01**	2.01	5.93	**3.01**	2.01
253.24	Output torque, in-lb	18413	**18423**	18437	22437	**22436**	22427	27438	**27438**	27438	27438	**27438**	27438	27438	**27438**	27438
	OHL input shaft	(A)	(A)	(A)	(A)	(A)	(A)	(A)	(A)	(A)	(A)	(A)	(A)	(A)	(A)	(A)
	OHL output shaft **(B)**	6261	**7343**	7343	6261	**7343**	7343	6261	**7343**	7343	6261	**7343**	7343	6261	**7343**	7343
	Output RPM	12.96	**6.58**	4.36	12.96	**6.58**	4.36	12.96	**6.58**	4.36	12.96	**6.58**	4.36	12.96	**6.58**	4.36
	Input Hp (max) **(C)**	3.98	**2.02**	1.34	4.85	**2.46**	1.63	5.64	**2.86**	1.90	5.64	**2.86**	1.91	5.64	**2.86**	1.91
266.13	Output torque, in-lb	19350	**19361**	19376	23580	**23578**	23569	27438	**27438**	27438	27438	**27438**	27438	27438	**27438**	27438
	OHL input shaft	(A)	(A)	(A)	(A)	(A)	(A)	(A)	(A)	(A)	(A)	(A)	(A)	(A)	(A)	(A)
	OHL output shaft **(B)**	5138	**7343**	7343	5138	**7343**	7343	5138	**7343**	7343	5138	**7343**	7343	5138	**7343**	7343
	Output RPM	11.80	**5.98**	3.97	11.80	**5.98**	3.97	11.80	**5.98**	3.97	11.80	**5.98**	3.97	11.80	**5.98**	3.97
	Input Hp (max) **(C)**	3.98	**2.02**	1.34	4.85	**2.46**	1.63	5.14	**2.61**	1.73	5.14	**2.61**	1.74	5.14	**2.61**	1.74
292.42	Output torque, in-lb	21261	**21273**	21289	25908	**25907**	25897	27438	**27438**	27438	27438	**27438**	27438	27438	**27438**	27438
	OHL input shaft	(A)	(A)	(A)	(A)	(A)	(A)	(A)	(A)	(A)	(A)	(A)	(A)	(A)	(A)	(A)
	OHL output shaft **(B)**	5138	**7343**	7343	5138	**7343**	7343	5138	**7343**	7343	5138	**7343**	7343	5138	**7343**	7343
	Output RPM	10.20	**5.17**	3.43	10.20	**5.17**	3.43	10.20	**5.17**	3.43	10.20	**5.17**	3.43	10.20	**5.17**	3.43
	Input Hp (max) **(C)**	3.98	**2.02**	1.34	4.44	**2.25**	1.49	4.44	**2.25**	1.49	4.44	**2.25**	1.51	4.44	**2.25**	1.51
338.29	Output torque, in-lb	24596	**24610**	24629	27438	**27438**	27438	27438	**27438**	27438	27438	**27438**	27438	27438	**27438**	27438
	OHL input shaft	(A)	(A)	(A)	(A)	(A)	(A)	(A)	(A)	(A)	(A)	(A)	(A)	(A)	(A)	(A)
	OHL output shaft **(B)**	7343	**7343**	7343	7343	**7343**	7343	7343	**7343**	7343	7343	**7343**	7343	7343	**7343**	7343
	Output RPM	9.98	**5.06**	3.35	9.98	**5.06**	3.35	9.98	**5.06**	3.35	9.98	**5.06**	3.35	9.98	**5.06**	3.35
	Input Hp (max) **(C)**	3.98	**2.02**	1.34	4.34	**2.20**	1.46	4.34	**2.20**	1.46	4.34	**2.20**	1.47	4.34	**2.20**	1.47
345.81	Output torque, in-lb	25143	**25157**	25177	27438	**27438**	27438	27438	**27438**	27438	27438	**27438**	27438	27438	**27438**	27438
	OHL input shaft	(A)	(A)	(A)	(A)	(A)	(A)	(A)	(A)	(A)	(A)	(A)	(A)	(A)	(A)	(A)
	OHL output shaft **(B)**	5138	**7343**	7343	5138	**7343**	7343	5138	**7343**	7343	5138	**7343**	7343	5138	**7343**	7343
	Output RPM	9.50	**4.82**	3.19	9.50	**4.82**	3.19	9.50	**4.82**	3.19	9.50	**4.82**	3.19	9.50	**4.82**	3.19
	Input Hp (max) **(C)**	3.98	**2.02**	1.34	4.14	**2.10**	1.39	4.14	**2.10**	1.39	4.14	**2.10**	1.40	4.14	**2.10**	1.40
363.19	Output torque, in-lb	26406	**26421**	26442	27438	**27438**	27438	27438	**27438**	27438	27438	**27438**	27438	27438	**27438**	27438
	OHL input shaft	(A)	(A)	(A)	(A)	(A)	(A)	(A)	(A)	(A)	(A)	(A)	(A)	(A)	(A)	(A)
	OHL output shaft **(B)**	7343	**7343**	7343	7343	**7343**	7343	7343	**7343**	7343	7343	**7343**	7343	7343	**7343**	7343
	Output RPM	9.11	**4.62**	3.06	9.11	**4.62**	3.06	9.11	**4.62**	3.06	9.11	**4.62**	3.06	9.11	**4.62**	3.06
	Input Hp (max) **(C)**	3.97	**2.01**	1.34	3.97	**2.01**	1.33	3.97	**2.01**	1.33	3.97	**2.01**	1.35	3.97	**2.01**	1.35
378.53	Output torque, in-lb	27438	**27438**	27438	27438	**27438**	27438	27438	**27438**	27438	27438	**27438**	27438	27438	**27438**	27438
	OHL input shaft	(A)	(A)	(A)	(A)	(A)	(A)	(A)	(A)	(A)	(A)	(A)	(A)	(A)	(A)	(A)
	OHL output shaft **(B)**	6261	**7343**	7343	6261	**7343**	7343	6261	**7343**	7343	6261	**7343**	7343	6261	**7343**	7343
	Output RPM	8.14	**4.13**	2.74	8.14	**4.13**	2.74	8.14	**4.13**	2.74	8.14	**4.13**	2.74	8.14	**4.13**	2.74
	Input Hp (max) **(C)**	3.55	**1.80**	1.33	3.55	**1.80**	1.19	3.55	**1.80**	1.19	3.55	**1.80**	1.20	3.55	**1.80**	1.20
423.63	Output torque, in-lb	27438	**27438**	27438	27438	**27438**	27438	27438	**27438**	27438	27438	**27438**	27438	27438	**27438**	27438
	OHL input shaft	(A)	(A)	(A)	(A)	(A)	(A)	(A)	(A)	(A)	(A)	(A)	(A)	(A)	(A)	(A)
	OHL output shaft **(B)**	7343	**7343**	7343	7343	**7343**	7343	7343	**7343**	7343	7343	**7343**	7343	7343	**7343**	7343
	Output RPM	7.87	**3.99**	2.65	7.87	**3.99**	2.65	7.87	**3.99**	2.65	7.87	**3.99**	2.65	7.87	**3.99**	2.65
	Input Hp (max) **(C)**	3.43	**1.74**	1.19	3.43	**1.74**	1.15	3.43	**1.74**	1.15	3.43	**1.74**	1.16	3.43	**1.74**	1.16
438.48	Output torque, in-lb	27438	**27438**	27438	27438	**27438**	27438	27438	**27438**	27438	27438	**27438**	27438	27438	**27438**	27438
	OHL input shaft	(A)	(A)	(A)	(A)	(A)	(A)	(A)	(A)	(A)	(A)	(A)	(A)	(A)	(A)	(A)
	OHL output shaft **(B)**	7343	**7343**	7343	7343	**7343**	7343	7343	**7343**	7343	7343	**7343**	7343	7343	**7343**	7343
	Output RPM	7.49	**3.80**	2.52	7.49	**3.80**	2.52	7.49	**3.80**	2.52	7.49	**3.80**	2.52	7.49	**3.80**	2.52
	Input Hp (max) **(C)**	3.26	**1.65**	1.15	3.26	**1.65**	1.10	3.26	**1.65**	1.10	3.26	**1.65**	1.11	3.26	**1.65**	1.11
460.82	Output torque, in-lb	27438	**27438**	27438	27438	**27438**	27438	27438	**27438**	27438	27438	**27438**	27438	27438	**27438**	27438
	OHL input shaft	(A)	(A)	(A)	(A)	(A)	(A)	(A)	(A)	(A)	(A)	(A)	(A)	(A)	(A)	(A)
	OHL output shaft **(B)**	7343	**7343**	7343	7343	**7343**	7343	7343	**7343**	7343	7343	**7343**	7343	7343	**7343**	7343
	Output RPM	7.11	**3.60**	2.39	7.11	**3.60**	2.39	7.11	**3.60**	2.39	7.11	**3.60**	2.39	7.11	**3.60**	2.39
	Input Hp (max) **(C)**	3.09	**1.57**	1.10	3.09	**1.57**	1.04	3.09	**1.57**	1.04	3.09	**1.57**	1.05	3.09	**1.57**	1.05
485.47	Output torque, in-lb	27438	**27438**	27438	27438	**27438**	27438	27438	**27438**	27438	27438	**27438**	27438	27438	**27438**	27438
	OHL input shaft	(A)	(A)	(A)	(A)	(A)	(A)	(A)	(A)	(A)	(A)	(A)	(A)	(A)	(A)	(A)
	OHL output shaft **(B)**	6261	**7343**	7343	6261	**7343**	7343	6261	**7343**	7343	6261	**7343**	7343	6261	**7343**	7343

Service factor: 1.0

(A) (B) (C) - See footnotes page on inside back cover

Blank areas (-) indicate configuration not available

ILH 108

Size: H_1084

Four-stage reduction – Clamp collar, three-piece coupled, separate

NEMA motor frame		56C			—			140TC			180TC			—		
IEC motor frame		71D			80D			90D			100D			112D		
Separate group		71			80			90			100			112		
Ratio	Output Rating data	3450	1750	1160	3450	1750	1160	3450	1750	1160	3450	1750	1160	3450	1750	1160
	Output RPM	6.35	**3.22**	2.14	6.35	**3.22**	2.14	6.35	**3.22**	2.14	6.35	**3.22**	2.14	6.35	**3.22**	2.14
	Input Hp (max) **(C)**	2.76	**1.40**	1.04	2.76	**1.40**	0.93	2.76	**1.40**	0.93	2.76	**1.40**	0.94	2.76	**1.40**	0.94
543.23	Output torque, in-lb	27438	**27438**	27438	27438	**27438**	27438	27438	**27438**	27438	27438	**27438**	27438	27438	**27438**	27438
	OHL input shaft	(A)	(A)	(A)	(A)	(A)	(A)	(A)	(A)	(A)	(A)	(A)	(A)	(A)	(A)	(A)
	OHL output shaft **(B)**	7343	**7343**	7343	7343	**7343**	7343	7343	**7343**	7343	7343	**7343**	7343	7343	**7343**	7343
	Output RPM	6.12	**3.10**	2.06	6.12	**3.10**	2.06	6.12	**3.10**	2.06	6.12	**3.10**	2.06	6.12	**3.10**	2.06
	Input Hp (max) **(C)**	2.66	**1.35**	0.93	2.66	**1.35**	0.90	2.66	**1.35**	0.90	2.66	**1.35**	0.90	2.66	**1.35**	0.90
564.07	Output torque, in-lb	27438	**27438**	27438	27438	**27438**	27438	27438	**27438**	27438	27438	**27438**	27438	27438	**27438**	27438
	OHL input shaft	(A)	(A)	(A)	(A)	(A)	(A)	(A)	(A)	(A)	(A)	(A)	(A)	(A)	(A)	(A)
	OHL output shaft **(B)**	7343	**7343**	7343	7343	**7343**	7343	7343	**7343**	7343	7343	**7343**	7343	7343	**7343**	7343
	Output RPM	5.51	**2.80**	1.85	5.51	**2.80**	1.85	5.51	**2.80**	1.85	5.51	**2.80**	1.85	5.51	**2.80**	1.85
	Input Hp (max) **(C)**	2.40	**1.22**	0.90	2.40	**1.22**	0.81	2.40	**1.22**	0.81	2.40	**1.22**	0.81	2.40	**1.22**	0.81
625.78	Output torque, in-lb	27438	**27438**	27438	27438	**27438**	27438	27438	**27438**	27438	27438	**27438**	27438	27438	**27438**	27438
	OHL input shaft	(A)	(A)	(A)	(A)	(A)	(A)	(A)	(A)	(A)	(A)	(A)	(A)	(A)	(A)	(A)
	OHL output shaft **(B)**	7343	**7343**	7343	7343	**7343**	7343	7343	**7343**	7343	7343	**7343**	7343	7343	**7343**	7343
	Output RPM	5.43	**2.76**	1.83	5.43	**2.76**	1.83	5.43	**2.76**	1.83	5.43	**2.76**	1.83	5.43	**2.76**	1.83
	Input Hp (max) **(C)**	2.37	**1.20**	0.81	2.37	**1.20**	0.80	2.37	**1.20**	0.80	2.37	**1.20**	0.80	2.37	**1.20**	0.80
635.01	Output torque, in-lb	27438	**27438**	27438	27438	**27438**	27438	27438	**27438**	27438	27438	**27438**	27438	27438	**27438**	27438
	OHL input shaft	(A)	(A)	(A)	(A)	(A)	(A)	(A)	(A)	(A)	(A)	(A)	(A)	(A)	(A)	(A)
	OHL output shaft **(B)**	7343	**7343**	7343	7343	**7343**	7343	7343	**7343**	7343	7343	**7343**	7343	7343	**7343**	7343
	Output RPM	4.66	**2.36**	1.57	4.66	**2.36**	1.57	4.66	**2.36**	1.57	4.66	**2.36**	1.57	4.66	**2.36**	1.57
	Input Hp (max) **(C)**	2.03	**1.03**	0.80	2.03	**1.03**	0.68	2.03	**1.03**	0.68	2.03	**1.03**	0.69	2.03	**1.03**	0.69
739.98	Output torque, in-lb	27438	**27438**	27438	27438	**27438**	27438	27438	**27438**	27438	27438	**27438**	27438	27438	**27438**	27438
	OHL input shaft	(A)	(A)	(A)	(A)	(A)	(A)	(A)	(A)	(A)	(A)	(A)	(A)	(A)	(A)	(A)
	OHL output shaft **(B)**	7343	**7343**	7343	7343	**7343**	7343	7343	**7343**	7343	7343	**7343**	7343	7343	**7343**	7343
	Output RPM	4.55	**2.31**	1.53	4.55	**2.31**	1.53	4.55	**2.31**	1.53	4.55	**2.31**	1.53	4.55	**2.31**	1.53
	Input Hp (max) **(C)**	1.98	**1.01**	0.68	1.98	**1.01**	0.67	1.98	**1.01**	0.67	1.98	**1.01**	0.67	1.98	**1.01**	0.67
757.74	Output torque, in-lb	27438	**27438**	27438	27438	**27438**	27438	27438	**27438**	27438	27438	**27438**	27438	27438	**27438**	27438
	OHL input shaft	(A)	(A)	(A)	(A)	(A)	(A)	(A)	(A)	(A)	(A)	(A)	(A)	(A)	(A)	(A)
	OHL output shaft **(B)**	7343	**7343**	7343	7343	**7343**	7343	7343	**7343**	7343	7343	**7343**	7343	7343	**7343**	7343
	Output RPM	4.18	**2.12**	1.41	4.18	**2.12**	1.41	4.18	**2.12**	1.41	4.18	**2.12**	1.41	4.18	**2.12**	1.41
	Input Hp (max) **(C)**	1.82	**0.92**	0.67	1.82	**0.92**	0.61	1.82	**0.92**	0.61	1.82	**0.92**	0.62	1.82	**0.92**	0.62
824.99	Output torque, in-lb	27438	**27438**	27438	27438	**27438**	27438	27438	**27438**	27438	27438	**27438**	27438	27438	**27438**	27438
	OHL input shaft	(A)	(A)	(A)	(A)	(A)	(A)	(A)	(A)	(A)	(A)	(A)	(A)	(A)	(A)	(A)
	OHL output shaft **(B)**	7343	**7343**	7343	7343	**7343**	7343	7343	**7343**	7343	7343	**7343**	7343	7343	**7343**	7343
	Output RPM	3.92	**1.99**	1.32	3.92	**1.99**	1.32	3.92	**1.99**	1.32	3.92	**1.99**	1.32	3.92	**1.99**	1.32
	Input Hp (max) **(C)**	1.71	**0.86**	0.61	1.71	**0.86**	0.57	1.71	**0.86**	0.57	1.71	**0.86**	0.58	1.71	**0.86**	0.58
880.77	Output torque, in-lb	27438	**27438**	27438	27438	**27438**	27438	27438	**27438**	27438	27438	**27438**	27438	27438	**27438**	27438
	OHL input shaft	(A)	(A)	(A)	(A)	(A)	(A)	(A)	(A)	(A)	(A)	(A)	(A)	(A)	(A)	(A)
	OHL output shaft **(B)**	7343	**7343**	7343	7343	**7343**	7343	7343	**7343**	7343	7343	**7343**	7343	7343	**7343**	7343
	Output RPM	3.74	**1.90**	1.26	3.74	**1.90**	1.26	3.74	**1.90**	1.26	3.74	**1.90**	1.26	3.74	**1.90**	1.26
	Input Hp (max) **(C)**	1.63	**0.83**	0.57	1.63	**0.83**	0.55	1.63	**0.83**	0.55	1.63	**0.83**	0.55	1.63	**0.83**	0.55
922.53	Output torque, in-lb	27438	**27438**	27438	27438	**27438**	27438	27438	**27438**	27438	27438	**27438**	27438	27438	**27438**	27438
	OHL input shaft	(A)	(A)	(A)	(A)	(A)	(A)	(A)	(A)	(A)	(A)	(A)	(A)	(A)	(A)	(A)
	OHL output shaft **(B)**	7343	**7343**	7343	7343	**7343**	7343	7343	**7343**	7343	7343	**7343**	7343	7343	**7343**	7343
	Output RPM	3.63	**1.84**	1.22	3.63	**1.84**	1.22	3.63	**1.84**	1.22	3.63	**1.84**	1.22	3.63	**1.84**	1.22
	Input Hp (max) **(C)**	1.58	**0.80**	0.55	1.58	**0.80**	0.53	1.58	**0.80**	0.53	1.58	**0.80**	0.54	1.58	**0.80**	0.54
950.04	Output torque, in-lb	27438	**27438**	27438	27438	**27438**	27438	27438	**27438**	27438	27438	**27438**	27438	27438	**27438**	27438
	OHL input shaft	(A)	(A)	(A)	(A)	(A)	(A)	(A)	(A)	(A)	(A)	(A)	(A)	(A)	(A)	(A)
	OHL output shaft **(B)**	7343	**7343**	7343	7343	**7343**	7343	7343	**7343**	7343	7343	**7343**	7343	7343	**7343**	7343
	Output RPM	3.25	**1.65**	1.09	3.25	**1.65**	1.09	3.25	**1.65**	1.09	3.25	**1.65**	1.09	3.25	**1.65**	1.09
	Input Hp (max) **(C)**	1.41	**0.72**	0.53	1.41	**0.72**	0.48	1.41	**0.72**	0.48	1.41	**0.72**	0.48	1.41	**0.72**	0.48
1062.79	Output torque, in-lb	27438	**27438**	27438	27438	**27438**	27438	27438	**27438**	27438	27438	**27438**	27438	27438	**27438**	27438
	OHL input shaft	(A)	(A)	(A)	(A)	(A)	(A)	(A)	(A)	(A)	(A)	(A)	(A)	(A)	(A)	(A)
	OHL output shaft **(B)**	7343	**7343**	7343	7343	**7343**	7343	7343	**7343**	7343	7343	**7343**	7343	7343	**7343**	7343

Service factor: 1.0

(A) (B) (C) - See footnotes page on inside back cover

Blank areas (-) indicate configuration not available

ILH 108

Size: H_1084

Four-stage reduction – Clamp collar, three-piece coupled, separate

NEMA motor frame		56C			—			140TC			180TC			—		
IEC motor frame		71D			80D			90D			100D			112D		
Separate group		71			80			90			100			112		
Ratio	**Output Rating data**	**3450**	**1750**	**1160**	**3450**	**1750**	**1160**	**3450**	**1750**	**1160**	**3450**	**1750**	**1160**	**3450**	**1750**	**1160**
	Output RPM	3.19	**1.62**	1.07	3.19	**1.62**	1.07	3.19	**1.62**	1.07	3.19	**1.62**	1.07	3.19	**1.62**	1.07
	Input Hp (max) **(C)**	1.39	**0.70**	0.48	1.39	**0.70**	0.47	1.39	**0.70**	0.47	1.39	**0.70**	0.47	1.39	**0.70**	0.47
1081.38	Output torque, in-lb	27438	**27438**	27438	27438	**27438**	27438	27438	**27438**	27438	27438	**27438**	27438	27438	**27438**	27438
	OHL input shaft	(A)	(A)	(A)	(A)	(A)	(A)	(A)	(A)	(A)	(A)	(A)	(A)	(A)	(A)	(A)
	OHL output shaft **(B)**	7343	**7343**	7343	7343	**7343**	7343	7343	**7343**	7343	7343	**7343**	7343	7343	**7343**	7343
	Output RPM	2.85	**1.45**	0.96	2.85	**1.45**	0.96	2.85	**1.45**	0.96	2.85	**1.45**	0.96	2.85	**1.45**	0.96
	Input Hp (max) **(C)**	1.24	**0.63**	0.47	1.24	**0.63**	0.42	1.24	**0.63**	0.42	1.24	**0.63**	0.42	1.24	**0.63**	0.42
1210.36	Output torque, in-lb	27438	**27438**	27438	27438	**27438**	27438	27438	**27438**	27438	27438	**27438**	27438	27438	**27438**	27438
	OHL input shaft	(A)	(A)	(A)	(A)	(A)	(A)	(A)	(A)	(A)	(A)	(A)	(A)	(A)	(A)	(A)
	OHL output shaft **(B)**	7343	**7343**	7343	7343	**7343**	7343	7343	**7343**	7343	7343	**7343**	7343	7343	**7343**	7343
	Output RPM	2.82	**1.43**	0.95	2.82	**1.43**	0.95	2.82	**1.43**	0.95	2.82	**1.43**	0.95	2.82	**1.43**	0.95
	Input Hp (max) **(C)**	1.23	**0.62**	0.42	1.23	**0.62**	0.41	1.23	**0.62**	0.41	1.23	**0.62**	0.42	1.23	**0.62**	0.42
1223.88	Output torque, in-lb	27438	**27438**	27438	27438	**27438**	27438	27438	**27438**	27438	27438	**27438**	27438	27438	**27438**	27438
	OHL input shaft	(A)	(A)	(A)	(A)	(A)	(A)	(A)	(A)	(A)	(A)	(A)	(A)	(A)	(A)	(A)
	OHL output shaft **(B)**	7343	**7343**	7343	7343	**7343**	7343	7343	**7343**	7343	7343	**7343**	7343	7343	**7343**	7343
	Output RPM	2.51	**1.27**	0.84	2.51	**1.27**	0.84	2.51	**1.27**	0.84	2.51	**1.27**	0.84	2.51	**1.27**	0.84
	Input Hp (max) **(C)**	1.09	**0.55**	0.41	1.09	**0.55**	0.37	1.09	**0.55**	0.37	1.09	**0.55**	0.37	1.09	**0.55**	0.37
1375.86	Output torque, in-lb	27438	**27438**	27438	27438	**27438**	27438	27438	**27438**	27438	27438	**27438**	27438	27438	**27438**	27438
	OHL input shaft	(A)	(A)	(A)	(A)	(A)	(A)	(A)	(A)	(A)	(A)	(A)	(A)	(A)	(A)	(A)
	OHL output shaft **(B)**	7343	**7343**	7343	7343	**7343**	7343	7343	**7343**	7343	7343	**7343**	7343	7343	**7343**	7343
	Output RPM	2.40	**1.22**	0.81	2.40	**1.22**	0.81	2.40	**1.22**	0.81	–	–	–	–	–	–
	Input Hp (max) **(C)**	1.05	**0.53**	0.37	1.05	**0.53**	0.35	1.05	**0.53**	0.35	–	–	–	–	–	–
1436.12	Output torque, in-lb	27438	**27438**	27438	27438	**27438**	27438	27438	**27438**	27438	–	–	–	–	–	–
	OHL input shaft	(A)	(A)	(A)	(A)	(A)	**(A)**	**(A)**	**(A)**	**(A)**	–	–	–	–	–	–
	OHL output shaft **(B)**	7343	**7343**	7343	7343	**7343**	7343	7343	**7343**	7343	–	–	–	–	–	–
	Output RPM	2.16	**1.10**	0.73	2.16	**1.10**	0.73	2.16	**1.10**	0.73	–	–	–	–	–	–
	Input Hp (max) **(C)**	0.94	**0.48**	0.35	0.94	**0.48**	0.32	0.94	**0.48**	0.32	–	–	–	–	–	–
1597.84	Output torque, in-lb	27438	**27438**	27438	27438	**27438**	27438	27438	**27438**	27438	–	–	–	–	–	–
	OHL input shaft	(A)	(A)	(A)	(A)	(A)	(A)	(A)	(A)	**(A)**	–	–	–	–	–	–
	OHL output shaft **(B)**	7343	**7343**	7343	7343	**7343**	7343	7343	**7343**	7343	–	–	–	–	–	–
	Output RPM	2.12	**1.08**	0.71	2.12	**1.08**	0.71	2.12	**1.08**	0.71	2.12	**1.08**	0.71	2.12	**1.08**	0.71
	Input Hp (max) **(C)**	0.92	**0.47**	0.32	0.92	**0.47**	0.31	0.92	**0.47**	0.31	0.92	**0.47**	0.31	0.92	**0.47**	0.31
1625.92	Output torque, in-lb	27438	**27438**	27438	27438	**27438**	27438	27438	**27438**	27438	27438	**27438**	27438	27438	**27438**	27438
	OHL input shaft	(A)	(A)	(A)	(A)	(A)	(A)	(A)	(A)	(A)	(A)	(A)	(A)	(A)	(A)	(A)
	OHL output shaft **(B)**	7343	**7343**	7343	7343	**7343**	7343	7343	**7343**	7343	7343	**7343**	7343	7343	**7343**	7343
	Output RPM	1.98	**1.01**	0.67	1.98	**1.01**	0.67	1.98	**1.01**	0.67	–	–	–	–	–	–
	Input Hp (max) **(C)**	0.86	**0.44**	0.31	0.86	**0.44**	0.29	0.86	**0.44**	0.29	–	–	–	–	–	–
1738.10	Output torque, in-lb	27438	**27438**	27438	27438	**27438**	27438	27438	**27438**	27438	–	–	–	–	–	–
	OHL input shaft	**(A)**	**(A)**	**(A)**	**(A)**	**(A)**	**(A)**	**(A)**	**(A)**	**(A)**	–	–	–	–	–	–
	OHL output shaft **(B)**	7343	**7343**	7343	7343	**7343**	7343	7343	**7343**	7343	–	–	–	–	–	–
	Output RPM	1.91	**0.97**	0.64	1.91	**0.97**	0.64	1.91	**0.97**	0.64	1.91	**0.97**	0.64	1.91	**0.97**	0.64
	Input Hp (max) **(C)**	0.83	**0.42**	0.29	0.83	**0.42**	0.28	0.83	**0.42**	0.28	0.83	**0.42**	0.28	0.83	**0.42**	0.28
1802.34	Output torque, in-lb	27438	**27438**	27438	27438	**27438**	27438	27438	**27438**	27438	27438	**27438**	27438	27438	**27438**	27438
	OHL input shaft	(A)	(A)	(A)	(A)	(A)	(A)	(A)	(A)	(A)	(A)	(A)	(A)	(A)	(A)	(A)
	OHL output shaft **(B)**	7343	**7343**	7343	7343	**7343**	7343	7343	**7343**	7343	7343	**7343**	7343	7343	**7343**	7343
	Output RPM	1.73	**0.88**	0.58	1.73	**0.88**	0.58	1.73	**0.88**	0.58	1.73	**0.88**	0.58	–	–	–
	Input Hp (max) **(C)**	0.75	**0.38**	0.28	0.75	**0.38**	0.25	0.75	**0.38**	0.25	0.75	**0.38**	0.26	–	–	–
1993.11	Output torque, in-lb	27438	**27438**	27438	27438	**27438**	27438	27438	**27438**	27438	27438	**27438**	27438	–	–	–
	OHL input shaft	**(A)**	**(A)**	**(A)**	**(A)**	**(A)**	**(A)**	**(A)**	**(A)**	**(A)**	**(A)**	**(A)**	**(A)**	–	–	–
	OHL output shaft **(B)**	7343	**7343**	7343	7343	**7343**	7343	7343	**7343**	7343	7343	**7343**	7343	–	–	–
	Output RPM	1.65	**0.84**	0.55	1.65	**0.84**	0.55	1.65	**0.84**	0.55	–	–	–	–	–	–
	Input Hp (max) **(C)**	0.72	**0.36**	0.25	0.72	**0.36**	0.24	0.72	**0.36**	0.24	–	–	–	–	–	–
2092.10	Output torque, in-lb	27438	**27438**	27438	27438	**27438**	27438	27438	**27438**	27438	–	–	–	–	–	–
	OHL input shaft	(A)	(A)	(A)	(A)	(A)	**(A)**	**(A)**	**(A)**	**(A)**	–	–	–	–	–	–
	OHL output shaft **(B)**	7343	**7343**	7343	7343	**7343**	7343	7343	**7343**	7343	–	–	–	–	–	–

Service factor: 1.0

(A) (B) (C) - See footnotes page on inside back cover

Blank areas (-) indicate configuration not available

ILH 108

Size: H_1084

Four-stage reduction – Clamp collar, three-piece coupled, separate

NEMA motor frame		56C			—			140TC			180TC			—		
IEC motor frame		71D			80D			90D			100D			112D		
Separate group		71			80			90			100			112		
Ratio	**Output Rating data**	**3450**	**1750**	**1160**	**3450**	**1750**	**1160**	**3450**	**1750**	**1160**	**3450**	**1750**	**1160**	**3450**	**1750**	**1160**
	Output RPM	1.60	**0.81**	0.54	1.60	**0.81**	0.54	–	–	–	–	–	–	–	–	–
	Input Hp (max) **(C)**	0.70	**0.35**	0.24	0.70	**0.35**	0.23	–	–	–	–	–	–	–	–	–
2160.67	Output torque, in-lb	27438	**27438**	27438	27438	**27438**	27438	–	–	–	–	–	–	–	–	–
	OHL input shaft	**(A)**	**(A)**	**(A)**	**(A)**	**(A)**	**(A)**	–	–	–	–	–	–	–	–	–
	OHL output shaft **(B)**	7343	**7343**	7343	7343	**7343**	7343	–	–	–	–	–	–	–	–	–
	Output RPM	1.48	**0.75**	0.50	1.48	**0.75**	0.50	1.48	**0.75**	0.50	–	–	–	–	–	–
	Input Hp (max) **(C)**	0.65	**0.33**	0.23	0.65	**0.33**	0.22	0.65	**0.33**	0.22	–	–	–	–	–	–
2326.24	Output torque, in-lb	27438	**27438**	27438	27438	**27438**	27438	27438	**27438**	27438	–	–	–	–	–	–
	OHL input shaft	(A)	**(A)**	**(A)**	**(A)**	**(A)**	**(A)**	**(A)**	**(A)**	**(A)**	–	–	–	–	–	–
	OHL output shaft **(B)**	7343	**7343**	7343	7343	**7343**	7343	7343	**7343**	7343	–	–	–	–	–	–
	Output RPM	1.30	**0.66**	0.44	1.30	**0.66**	0.44	–	–	–	–	–	–	–	–	–
	Input Hp (max) **(C)**	0.57	**0.29**	0.22	0.57	**0.29**	0.19	–	–	–	–	–	–	–	–	–
2657.65	Output torque, in-lb	27438	**27438**	27438	27438	**27438**	27438	–	–	–	–	–	–	–	–	–
	OHL input shaft	**(A)**	**(A)**	**(A)**	**(A)**	**(A)**	**(A)**	–	–	–	–	–	–	–	–	–
	OHL output shaft **(B)**	7343	**7343**	7343	7343	**7343**	7343	–	–	–	–	–	–	–	–	–
	Output RPM	1.19	**0.60**	0.40	1.19	**0.60**	0.40	–	–	–	–	–	–	–	–	–
	Input Hp (max) **(C)**	0.52	**0.26**	0.18	0.52	**0.26**	0.17	–	–	–	–	–	–	–	–	–
2902.52	Output torque, in-lb	27438	**27438**	27438	27438	**27438**	27438	–	–	–	–	–	–	–	–	–
	OHL input shaft	(A)	(A)	(A)	(A)	(A)	(A)	–	–	–	–	–	–	–	–	–
	OHL output shaft **(B)**	7343	**7343**	7343	7343	**7343**	7343	–	–	–	–	–	–	–	–	–
	Output RPM	1.07	**0.54**	0.36	1.07	**0.54**	0.36	–	–	–	–	–	–	–	–	–
	Input Hp (max) **(C)**	0.47	**0.24**	0.16	0.47	**0.24**	0.16	–	–	–	–	–	–	–	–	–
3217.45	Output torque, in-lb	27438	**27438**	27438	27438	**27438**	27438	–	–	–	–	–	–	–	–	–
	OHL input shaft	**(A)**	**(A)**	**(A)**	**(A)**	**(A)**	**(A)**	–	–	–	–	–	–	–	–	–
	OHL output shaft **(B)**	7343	**7343**	7343	7343	**7343**	7343	–	–	–	–	–	–	–	–	–

Service factor: 1.0

(A) (B) (C) - See footnotes page on inside back cover

Blank areas (-) indicate configuration not available

ILH 108

Size: H_1085

Five-stage reduction – Clamp collar, three-piece coupled, separate

NEMA motor frame		56C			—			140TC			180TC			—		
IEC motor frame		71D			80D			90D			100D			112D		
Separate group		71			80			90			100			112		
Ratio	**Output Rating data**	**3450**	**1750**	**1160**	**3450**	**1750**	**1160**	**3450**	**1750**	**1160**	**3450**	**1750**	**1160**	**3450**	**1750**	**1160**
	Output RPM	1.12	**0.57**	0.38	1.12	**0.57**	0.38	1.12	**0.57**	0.38	1.12	**0.57**	0.38	1.12	**0.57**	0.38
	Input Hp (max) **(C)**	0.49	**0.25**	0.16	0.49	**0.25**	0.16	0.49	**0.25**	0.16	0.49	**0.25**	0.17	0.49	**0.25**	0.17
3071.20	Output torque, in-lb	27438	**27438**	27438	27438	**27438**	27438	27438	**27438**	27438	27438	**27438**	27438	27438	**27438**	27438
	OHL input shaft	(A)	(A)	(A)	(A)	(A)	(A)	(A)	(A)	(A)	(A)	(A)	(A)	(A)	(A)	(A)
	OHL output shaft **(B)**	7343	**7343**	7343	7343	**7343**	7343	7343	**7343**	7343	7343	**7343**	7343	7343	**7343**	7343
	Output RPM	0.99	**0.50**	0.33	0.99	**0.50**	0.33	0.99	**0.50**	0.33	0.99	**0.50**	0.33	0.99	**0.50**	0.33
	Input Hp (max) **(C)**	0.43	**0.22**	0.14	0.43	**0.22**	0.14	0.43	**0.22**	0.14	0.43	**0.22**	0.15	0.43	**0.22**	0.15
3487.94	Output torque, in-lb	27438	**27438**	27438	27438	**27438**	27438	27438	**27438**	27438	27438	**27438**	27438	27438	**27438**	27438
	OHL input shaft	(A)	(A)	(A)	(A)	(A)	(A)	(A)	(A)	(A)	(A)	(A)	(A)	(A)	(A)	(A)
	OHL output shaft **(B)**	7343	**7343**	7343	7343	**7343**	7343	7343	**7343**	7343	7343	**7343**	7343	7343	**7343**	7343
	Output RPM	0.86	**0.44**	0.29	0.86	**0.44**	0.29	0.86	**0.44**	0.29	0.86	**0.44**	0.29	0.86	**0.44**	0.29
	Input Hp (max) **(C)**	0.38	**0.19**	0.13	0.38	**0.19**	0.13	0.38	**0.19**	0.13	0.38	**0.19**	0.13	0.38	**0.19**	0.13
4002.19	Output torque, in-lb	27438	**27438**	27438	27438	**27438**	27438	27438	**27438**	27438	27438	**27438**	27438	27438	**27438**	27438
	OHL input shaft	(A)	(A)	(A)	(A)	(A)	(A)	(A)	(A)	(A)	(A)	(A)	(A)	(A)	(A)	(A)
	OHL output shaft **(B)**	7343	**7343**	7343	7343	**7343**	7343	7343	**7343**	7343	7343	**7343**	7343	7343	**7343**	7343
	Output RPM	0.80	**0.41**	0.27	0.80	**0.41**	0.27	0.80	**0.41**	0.27	0.80	**0.41**	0.27	–	–	–
	Input Hp (max) **(C)**	0.35	**0.18**	0.12	0.35	**0.18**	0.12	0.35	**0.18**	0.12	0.35	**0.18**	0.12	–	–	–
4308.47	Output torque, in-lb	27438	**27438**	27438	27438	**27438**	27438	27438	**27438**	27438	27438	**27438**	27438	–	–	–
	OHL input shaft	(A)	(A)	(A)	(A)	(A)	(A)	**(A)**	**(A)**	**(A)**	**(A)**	**(A)**	**(A)**	–	–	–
	OHL output shaft **(B)**	7343	**7343**	7343	7343	**7343**	7343	7343	**7343**	7343	7343	**7343**	7343	–	–	–
	Output RPM	0.75	**0.38**	0.25	0.75	**0.38**	0.25	0.75	**0.38**	0.25	0.75	**0.38**	0.25	0.75	**0.38**	0.25
	Input Hp (max) **(C)**	0.33	**0.17**	0.11	0.33	**0.17**	0.11	0.33	**0.17**	0.11	0.33	**0.17**	0.11	0.33	**0.17**	0.11
4604.08	Output torque, in-lb	27438	**27438**	27438	27438	**27438**	27438	27438	**27438**	27438	27438	**27438**	27438	27438	**27438**	27438
	OHL input shaft	(A)	(A)	(A)	(A)	(A)	(A)	(A)	(A)	(A)	(A)	(A)	(A)	(A)	(A)	(A)
	OHL output shaft **(B)**	7343	**7343**	7343	7343	**7343**	7343	7343	**7343**	7343	7343	**7343**	7343	7343	**7343**	7343
	Output RPM	0.71	**0.36**	0.24	0.71	**0.36**	0.24	0.71	**0.36**	0.24	0.71	**0.36**	0.24	–	–	–
	Input Hp (max) **(C)**	0.31	**0.16**	0.10	0.31	**0.16**	0.10	0.31	**0.16**	0.10	0.31	**0.16**	0.11	–	–	–
4826.47	Output torque, in-lb	27438	**27438**	27438	27438	**27438**	27438	27438	**27438**	27438	27438	**27438**	27438	–	–	–
	OHL input shaft	(A)	(A)	(A)	(A)	(A)	(A)	**(A)**	**(A)**	**(A)**	**(A)**	**(A)**	**(A)**	–	–	–
	OHL output shaft **(B)**	7343	**7343**	7343	7343	**7343**	7343	7343	**7343**	7343	7343	**7343**	7343	–	–	–
	Output RPM	0.67	**0.34**	0.22	0.67	**0.34**	0.22	0.67	**0.34**	0.22	0.67	**0.34**	0.22	–	–	–
	Input Hp (max) **(C)**	0.29	**0.15**	0.10	0.29	**0.15**	0.10	0.29	**0.15**	0.10	0.29	**0.15**	0.10	–	–	–
5159.45	Output torque, in-lb	27438	**27438**	27438	27438	**27438**	27438	27438	**27438**	27438	27438	**27438**	27438	–	–	–
	OHL input shaft	**(A)**	**(A)**	**(A)**	**(A)**	**(A)**	**(A)**	**(A)**	**(A)**	**(A)**	**(A)**	**(A)**	**(A)**	–	–	–
	OHL output shaft **(B)**	7343	**7343**	7343	7343	**7343**	7343	7343	**7343**	7343	7343	**7343**	7343	–	–	–
	Output RPM	0.58	**0.29**	0.19	0.58	**0.29**	0.19	0.58	**0.29**	0.19	0.58	**0.29**	0.19	0.58	**0.29**	0.19
	Input Hp (max) **(C)**	0.25	**0.13**	0.08	0.25	**0.13**	0.08	0.25	**0.13**	0.08	0.25	**0.13**	0.09	0.25	**0.13**	0.09
5965.09	Output torque, in-lb	27438	**27438**	27438	27438	**27438**	27438	27438	**27438**	27438	27438	**27438**	27438	27438	**27438**	27438
	OHL input shaft	(A)	(A)	(A)	(A)	(A)	(A)	(A)	(A)	(A)	(A)	(A)	(A)	(A)	(A)	(A)
	OHL output shaft **(B)**	7343	**7343**	7343	7343	**7343**	7343	7343	**7343**	7343	7343	**7343**	7343	7343	**7343**	7343
	Output RPM	0.51	**0.26**	0.17	0.51	**0.26**	0.17	0.51	**0.26**	0.17	0.51	**0.26**	0.17	–	–	–
	Input Hp (max) **(C)**	0.22	**0.11**	0.07	0.22	**0.11**	0.07	0.22	**0.11**	0.07	0.22	**0.11**	0.08	–	–	–
6759.36	Output torque, in-lb	27438	**27438**	27438	27438	**27438**	27438	27438	**27438**	27438	27438	**27438**	27438	–	–	–
	OHL input shaft	(A)	(A)	(A)	(A)	(A)	(A)	(A)	(A)	(A)	(A)	**(A)**	**(A)**	–	–	–
	OHL output shaft **(B)**	7343	**7343**	7343	7343	**7343**	7343	7343	**7343**	7343	7343	**7343**	7343	–	–	–
	Output RPM	0.49	**0.25**	0.16	0.49	**0.25**	0.16	0.49	**0.25**	0.16	–	–	–	–	–	–
	Input Hp (max) **(C)**	0.21	**0.11**	0.07	0.21	**0.11**	0.07	0.21	**0.11**	0.07	–	–	–	–	–	–
7086.24	Output torque, in-lb	27438	**27438**	27438	27438	**27438**	27438	27438	**27438**	27438	–	–	–	–	–	–
	OHL input shaft	**(A)**	**(A)**	**(A)**	**(A)**	**(A)**	**(A)**	**(A)**	**(A)**	**(A)**	–	–	–	–	–	–
	OHL output shaft **(B)**	7343	**7343**	7343	7343	**7343**	7343	7343	**7343**	7343	–	–	–	–	–	–

Service factor: 1.0

(A) (B) (C) - See footnotes page on inside back cover

Blank areas (-) indicate configuration not available

ILH 128

Size: H_1282

Double reduction – Clamp collar, three-piece coupled, separate

NEMA motor frame		210TC			250TC			280TC			320TC					360TC
IEC motor frame		132D			160D			180D/200D			225D					—
Separate group		132			160			180			225					—
Ratio	Output Rating data	3450	1750	1160	3450	1750	1160	3450	1750	1160	3450	1750	1160	3450	1750	1160
	Output RPM	–	–	–	950	**482**	320	950	**482**	320	950	**482**	320	950	**482**	320
	Input Hp (max) **(C)**	–	–	–	89.54	**45.42**	30.11	182.39	**92.52**	61.33	247.66	**135.96**	89.85	247.66	**135.96**	89.85
3.63	Output torque, in-lb	–	–	–	5938	**5938**	5938	12095	**12095**	12095	16423	**17774**	17720	16423	**17774**	17720
	OHL input shaft	–	–	–	**(A)**	**1523**	1586	**(A)**	**1739**	2096	**(A)**	**2182**	2275	(A)	**2182**	2275
	OHL output shaft **(B)**	–	–	–	**(A)**	**4055**	4392	**(A)**	**4055**	4392	**(A)**	**4055**	4392	(A)	**4055**	4392
	Output RPM	–	–	–	714	**362**	240	714	**362**	240	714	**362**	240	714	**362**	240
	Input Hp (max) **(C)**	–	–	–	89.54	**45.42**	30.11	182.38	**92.51**	61.32	231.27	**126.33**	85.91	231.27	**126.33**	85.91
4.83	Output torque, in-lb	–	–	–	7901	**7901**	7901	16092	**16092**	16092	20406	**21975**	22546	20406	**21975**	22546
	OHL input shaft	–	–	–	**(A)**	**1474**	1585	**(A)**	**1631**	1990	**(A)**	**2136**	2266	(A)	**2136**	2266
	OHL output shaft **(B)**	–	–	–	**(A)**	**4392**	4886	**(A)**	**4392**	4886	**(A)**	**4392**	4886	(A)	**4392**	4886
	Output RPM	617	**313**	208	617	**313**	208	617	**313**	208	617	**313**	208	617	**313**	208
	Input Hp (max) **(C)**	59.73	**32.07**	21.60	89.59	**45.45**	30.12	182.46	**92.55**	61.35	211.38	**114.62**	75.98	211.38	**114.62**	75.98
5.59	Output torque, in-lb	6100	**6456**	6559	9149	**9149**	9149	18633	**18633**	18633	21586	**23075**	23075	21586	**23075**	23075
	OHL input shaft	**(A)**	**949**	987	**(A)**	**1442**	1578	**(A)**	**1562**	1919	**(A)**	**2149**	2279	(A)	**2149**	2279
	OHL output shaft **(B)**	**(A)**	**4392**	4886	**(A)**	**4392**	4886	**(A)**	**4392**	4886	**(A)**	**4392**	4886	(A)	**4392**	4886
	Output RPM	–	–	–	582	**295**	196	582	**295**	196	582	**295**	196	582	**295**	196
	Input Hp (max) **(C)**	–	–	–	89.57	**45.43**	30.12	182.42	**92.53**	61.34	247.72	**135.98**	89.86	247.72	**135.98**	89.86
5.93	Output torque, in-lb	–	–	–	9703	**9703**	9703	19762	**19762**	19762	26835	**29041**	28953	26835	**29041**	28953
	OHL input shaft	–	–	–	**(A)**	**1523**	1586	**(A)**	**1739**	2096	**(A)**	**2182**	2275	(A)	**2182**	2275
	OHL output shaft **(B)**	–	–	–	**(A)**	**4392**	4886	**(A)**	**4392**	4886	**(A)**	**4392**	4886	(A)	**4392**	4886
	Output RPM	–	–	–	438	**222**	147	438	**222**	147	438	**222**	147	438	**222**	147
	Input Hp (max) **(C)**	–	–	–	89.68	**45.49**	30.15	182.66	**92.65**	61.42	222.48	**126.52**	86.77	222.48	**126.52**	86.77
7.88	Output torque, in-lb	–	–	–	12910	**12910**	12910	26294	**26294**	26294	32027	**35906**	37148	32027	**35906**	37148
	OHL input shaft	–	–	–	**(A)**	**1474**	1585	**(A)**	**1631**	1988	**(A)**	**2133**	2262	(A)	**2133**	2262
	OHL output shaft **(B)**	–	–	–	**(A)**	**4886**	5306	**(A)**	**4886**	5306	**(A)**	**4886**	5306	(A)	**4886**	5306
	Output RPM	378	**192**	127	378	**192**	127	378	**192**	127	378	**192**	127	378	**192**	127
	Input Hp (max) **(C)**	59.76	**32.08**	21.60	89.63	**45.46**	30.14	182.54	**92.59**	61.37	202.63	**116.62**	80.06	202.63	**116.62**	80.06
9.13	Output torque, in-lb	9967	**10549**	10717	14949	**14949**	14949	30445	**30445**	30445	33797	**38347**	39712	33797	**38347**	39712
	OHL input shaft	**(A)**	**949**	987	**(A)**	**1442**	1577	**(A)**	**1562**	1919	**(A)**	**2099**	2263	(A)	**2099**	2263
	OHL output shaft **(B)**	4392	**4886**	5306	4392	**4886**	5306	4392	**4886**	5306	4392	**4886**	5306	4392	**4886**	5306
	Output RPM	320	**162**	108	320	**162**	108	320	**162**	108	320	**162**	108	320	**162**	108
	Input Hp (max) **(C)**	57.60	**30.93**	20.83	89.62	**45.46**	30.13	182.09	**92.59**	61.37	182.09	**104.95**	70.54	182.09	**104.95**	70.54
10.78	Output torque, in-lb	11343	**12009**	12198	17649	**17649**	17649	35860	**35945**	35945	35860	**40744**	41313	35860	**40744**	41313
	OHL input shaft	**(A)**	**948**	986	**(A)**	**1397**	1585	**(A)**	**1297**	1828	**(A)**	**2080**	2274	(A)	**2080**	2274
	OHL output shaft **(B)**	4392	**4886**	5306	4392	**4886**	5306	4392	**4886**	5306	4392	**4886**	5306	4392	**4886**	5306
	Output RPM	287	**145**	96	287	**145**	96	287	**145**	96	287	**145**	96	287	**145**	96
	Input Hp (max) **(C)**	55.97	**30.06**	20.24	89.66	**45.48**	30.15	169.60	**92.63**	61.40	169.60	**96.35**	64.76	169.60	**96.35**	64.76
12.03	Output torque, in-lb	12301	**13024**	13230	19705	**19705**	19705	37273	**40133**	40133	37273	**41743**	42327	37273	**41743**	42327
	OHL input shaft	**(A)**	**946**	985	**(A)**	**1363**	1579	**(A)**	**1091**	1729	**(A)**	**2108**	2279	(A)	**2108**	2279
	OHL output shaft **(B)**	4392	**5306**	5578	4392	**5306**	5578	4392	**5306**	5578	4392	**5306**	5578	4392	**5306**	5578
	Output RPM	245	**124**	83	245	**124**	83	245	**124**	83	245	**124**	83	245	**124**	83
	Input Hp (max) **(C)**	53.41	**28.69**	19.32	89.64	**45.47**	30.14	153.08	**85.09**	57.18	153.08	**85.09**	57.18	153.08	**85.09**	57.18
14.06	Output torque, in-lb	13718	**14525**	14757	23025	**23025**	23025	39319	**43087**	43682	39319	**43087**	43682	39319	**43087**	43682
	OHL input shaft	**(A)**	**952**	990	**(A)**	**1308**	1583	**(A)**	**1014**	1612	**(A)**	**2141**	2285	(A)	**2141**	2285
	OHL output shaft **(B)**	4886	**5306**	5578	4886	**5306**	5578	4886	**5306**	5578	**(A)**	**5306**	5578	(A)	**5306**	5578
	Output RPM	214	**109**	72	214	**109**	72	214	**109**	72	214	**109**	72	214	**109**	72
	Input Hp (max) **(C)**	50.81	**27.30**	18.38	89.64	**45.47**	30.14	139.01	**76.13**	51.17	139.84	**76.13**	51.17	139.84	**76.13**	51.17
16.12	Output torque, in-lb	14962	**15848**	16099	26398	**26398**	26398	40937	**44197**	44814	41181	**44197**	44814	41181	**44197**	44814
	OHL input shaft	**(A)**	**952**	991	**(A)**	**1218**	1526	**(A)**	**1039**	1638	**(A)**	**2165**	2289	(A)	**2165**	2289
	OHL output shaft **(B)**	4886	**5306**	5578	4886	**5306**	5578	4886	**5306**	5578	4886	**5306**	5578	4886	**5306**	5578
	Output RPM	185	**94**	62	185	**94**	62	185	**94**	62	185	**94**	62	185	**94**	65
	Input Hp (max) **(C)**	47.80	**25.68**	17.30	86.32	**45.46**	30.14	123.94	**67.24**	44.57	124.57	**67.24**	44.57	124.57	**67.24**	44.57
18.64	Output torque, in-lb	16278	**17240**	17518	29395	**30520**	30520	42203	**45140**	45140	42419	**45140**	45140	42419	**45140**	45140
	OHL input shaft	**(A)**	**950**	989	**(A)**	**1008**	1456	**(A)**	**1071**	1707	**(A)**	**2183**	2281	(A)	**5183**	2281
	OHL output shaft **(B)**	4886	**5578**	5578	4886	**5578**	5578	4886	**5578**	5578	4886	**5578**	5578	4886	**5578**	5578

Service factor: 1.0

(A) (B) (C) - See footnotes page on inside back cover

Blank areas (-) indicate configuration not available

ILH 128

Size: H_1282

Double reduction – Clamp collar, three-piece coupled, separate

NEMA motor frame		210TC			250TC			280TC			320TC					360TC
IEC motor frame		132D			160D			180D/200D			225D					—
Separate group		132			160			180			225					—
Ratio	Output Rating data	3450	1750	1160	3450	1750	1160	3450	1750	1160	3450	1750	1160	3450	1750	1160
	Output RPM	178	**90**	60	178	**90**	60	178	**90**	60	178	**90**	60	178	**90**	60
	Input Hp (max) **(C)**	46.95	**25.23**	16.99	84.76	**45.46**	30.13	120.16	**64.77**	42.94	120.73	**64.77**	42.94	120.73	**64.77**	42.94
19.35	Output torque, in-lb	16597	**17581**	17862	29962	**31677**	31677	42476	**45140**	45140	42677	**45140**	45140	42677	**45140**	45140
	OHL input shaft	**(A)**	**950**	989	**(A)**	**950**	1438	**(A)**	**1093**	1729	**(A)**	**2187**	2284	(A)	**2187**	2284
	OHL output shaft **(B)**	4886	**5578**	6464	4886	**5578**	6464	**(A)**	**5578**	6464	4886	**5578**	6464	4886	**5578**	6464
	Output RPM	161	**82**	54	161	**82**	54	161	**82**	54	161	**82**	54	–	–	–
	Input Hp (max) **(C)**	44.81	**24.08**	16.22	79.52	**43.36**	29.45	110.43	**58.54**	38.81	110.89	**58.54**	38.81	–	–	–
21.41	Output torque, in-lb	17526	**18566**	18864	31102	**33436**	34255	43191	**45140**	45140	43372	**45140**	45140	–	–	–
	OHL input shaft	**(A)**	**948**	987	**(A)**	**880**	1321	**(A)**	**1147**	1784	**(A)**	**2194**	2290	–	–	–
	OHL output shaft **(B)**	4886	**5578**	6464	4886	**5578**	6464	4886	**5578**	6464	4886	**5578**	6464	–	–	–
	Output RPM	138	**70**	46	138	**70**	46	138	**70**	46	138	**70**	46	–	–	–
	Input Hp (max) **(C)**	41.40	**22.25**	14.99	70.56	**38.47**	26.48	96.61	**50.04**	33.17	97.03	**50.04**	33.17	–	–	–
25.05	Output torque, in-lb	18945	**20075**	20395	32288	**34705**	36039	44212	**45140**	45140	44404	**45140**	45140	–	–	–
	OHL input shaft	**(A)**	**955**	985	**(A)**	**862**	1272	**(A)**	**1219**	1829	**(A)**	**2202**	2295	–	–	–
	OHL output shaft **(B)**	5306	**5578**	6464	5306	**5578**	6464	5306	**5578**	6464	5306	**5578**	6464	–	–	–
	Output RPM	127	**65**	43	127	**65**	43	127	**65**	43	127	**65**	43	–	–	–
	Input Hp (max) **(C)**	39.75	**21.37**	14.39	66.26	**36.13**	24.87	90.17	**46.20**	30.62	90.60	**46.20**	30.62	–	–	–
27.13	Output torque, in-lb	19701	**20877**	21212	32837	**35302**	36661	44687	**45140**	45140	44904	**45140**	45140	–	–	–
	OHL input shaft	**(A)**	**956**	995	**(A)**	**851**	1263	**(A)**	**1253**	1844	**(A)**	**2203**	2298	–	–	–
	OHL output shaft **(B)**	5306	**5578**	6464	5306	**5578**	6464	5306	**5578**	6464	5306	**5578**	6464	–	–	–
	Output RPM	114	**58**	38	114	**58**	38	114	**58**	38	–	–	–	–	–	–
	Input Hp (max) **(C)**	37.56	**20.19**	13.60	60.68	**33.09**	22.77	81.60	**41.39**	27.44	–	–	–	–	–	–
30.28	Output torque, in-lb	20775	**22019**	22370	33563	**36083**	37466	45139	**45140**	45140	–	–	–	–	–	–
	OHL input shaft	**(A)**	**956**	995	**(A)**	**839**	1251	**(A)**	**1294**	1862	–	–	–	–	–	–
	OHL output shaft **(B)**	5306	**6464**	7974	5306	**6464**	7974	5306	**6464**	7974	–	–	–	–	–	–
	Output RPM	107	**55**	36	107	**55**	36	107	**55**	36	–	–	–	–	–	–
	Input Hp (max) **(C)**	36.61	**19.68**	13.25	57.83	**31.54**	21.71	76.95	**39.03**	25.87	–	–	–	–	–	–
32.11	Output torque, in-lb	21474	**22759**	23124	33922	**36468**	37871	45139	**45140**	45140	–	–	–	–	–	–
	OHL input shaft	**(A)**	**956**	995	**(A)**	**836**	1245	**(A)**	**1315**	1870	–	–	–	–	–	–
	OHL output shaft **(B)**	5306	**6464**	7974	5306	**6464**	7974	5306	**6464**	7974	–	–	–	–	–	–
	Output RPM	95	**48**	32	95	**48**	32	–	–	–	–	–	–	–	–	–
	Input Hp (max) **(C)**	34.44	**18.52**	12.47	52.12	**28.42**	19.56	–	–	–	–	–	–	–	–	–
36.39	Output torque, in-lb	22898	**24268**	24660	34651	**37251**	38682	–	–	–	–	–	–	–	–	–
	OHL input shaft	**(A)**	**955**	994	**(A)**	**824**	1234	–	–	–	–	–	–	–	–	–
	OHL output shaft **(B)**	5578	**6464**	7974	5578	**6464**	7974	–	–	–	–	–	–	–	–	–
	Output RPM	89	**45**	30	89	**45**	30	–	–	–	–	–	–	–	–	–
	Input Hp (max) **(C)**	33.69	**18.12**	12.20	47.63	**26.84**	17.74	–	–	–	–	–	–	–	–	–
38.94	Output torque, in-lb	23968	**25405**	25813	33880	**37643**	37529	–	–	–	–	–	–	–	–	–
	OHL input shaft	**(A)**	**865**	993	**(A)**	**819**	1315	–	–	–	–	–	–	–	–	–
	OHL output shaft **(B)**	5578	**6464**	7974	5578	**6464**	7974	–	–	–	–	–	–	–	–	–
	Output RPM	84	**43**	28	–	–	–	–	–	–	–	–	–	–	–	–
	Input Hp (max) **(C)**	32.48	**17.95**	12.09	–	–	–	–	–	–	–	–	–	–	–	–
40.96	Output torque, in-lb	24306	**26479**	26909	–	–	–	–	–	–	–	–	–	–	–	–
	OHL input shaft	**(A)**	**716**	991	–	–	–	–	–	–	–	–	–	–	–	–
	OHL output shaft **(B)**	5578	**6464**	7974	–	–	–	–	–	–	–	–	–	–	–	–

Service factor: 1.0

(A) (B) (C) - See footnotes page on inside back cover

Blank areas (-) indicate configuration not available

ILH 128

Size: H_1283

Triple reduction – Clamp collar, three-piece coupled, separate

NEMA motor frame		140TC			180TC			—			210TC			250TC			280TC		
IEC motor frame		90D			100D			112D			132D			160D			180D/200D		
Separate group		90			100			112			132			160			180		
Ratio	Output Rating data	3450	1750	1160	3450	1750	1160	3450	1750	1160	3450	1750	1160	3450	1750	1160	3450	1750	1160
	Output RPM	–	–	–	–	–	–	–	–	–	92	**47**	31	92	**47**	31	92	**47**	31
	Input Hp (max) **(C)**	–	–	–	–	–	–	–	–	–	51.65	**32.47**	21.70	51.65	**32.47**	22.11	51.65	**32.47**	22.11
37.57	Output torque, in-lb	–	–	–	–	–	–	–	–	–	35449	**43930**	44294	35449	**43930**	45140	35449	**43930**	45140
	OHL input shaft	–	–	–	–	–	–	–	–	–	**(A)**	**949**	988	**(A)**	**1516**	1592	**(A)**	**2114**	2462
	OHL output shaft **(B)**	–	–	–	–	–	–	–	–	–	5578	**6464**	7974	5578	**6464**	7974	5578	**6464**	7974
	Output RPM	–	–	–	–	–	–	–	–	–	79	**40**	27	79	**40**	27	79	**40**	27
	Input Hp (max) **(C)**	–	–	–	–	–	–	–	–	–	46.95	**28.68**	19.01	46.95	**28.68**	19.01	46.95	**28.68**	19.01
43.71	Output torque, in-lb	–	–	–	–	–	–	–	–	–	37490	**45140**	45140	37490	**45140**	45140	37490	**45140**	45140
	OHL input shaft	–	–	–	–	–	–	–	–	–	**(A)**	**952**	991	**(A)**	**1521**	1584	**(A)**	**2125**	2483
	OHL output shaft **(B)**	–	–	–	–	–	–	–	–	–	5578	**6464**	7974	5578	**6464**	7974	5578	**6464**	7974
	Output RPM	–	–	–	–	–	–	71	**36**	24	71	**36**	24	71	**36**	24	71	**36**	24
	Input Hp (max) **(C)**	–	–	–	–	–	–	27.34	**13.87**	9.19	43.69	**25.88**	17.15	43.69	**25.88**	17.15	43.69	**25.88**	17.15
48.44	Output torque, in-lb	–	–	–	–	–	–	24194	**24194**	24194	38663	**45140**	45140	38663	**45140**	45140	38663	**45140**	45140
	OHL input shaft	–	–	–	–	–	–	**(A)**	**837**	872	**(A)**	**954**	993	**(A)**	**1525**	1588	**(A)**	**2137**	2493
	OHL output shaft **(B)**	–	–	–	–	–	–	5578	**7974**	8992	5578	**7974**	8992	5578	**7974**	8992	5578	**7974**	8992
	Output RPM	–	–	–	60	**30**	20	60	**30**	20	60	**30**	20	60	**30**	20	60	**30**	20
	Input Hp (max) **(C)**	–	–	–	20.42	**10.36**	6.87	27.34	**13.87**	9.19	38.73	**21.78**	14.43	38.73	**21.78**	14.43	38.73	**21.78**	14.43
57.56	Output torque, in-lb	–	–	–	21471	**21471**	21471	28750	**28750**	28750	40720	**45140**	45140	40720	**45140**	45140	40720	**45140**	45140
	OHL input shaft	–	–	–	**(A)**	**713**	742	**(A)**	**843**	877	**(A)**	**955**	994	**(A)**	**1523**	1586	**(A)**	**2153**	2502
	OHL output shaft **(B)**	–	–	–	6464	**7974**	8992	6464	**7974**	8992	6464	**7974**	8992	6464	**7974**	8992	6464	**7974**	8992
	Output RPM	–	–	–	52	**26**	17	52	**26**	17	52	**26**	17	52	**26**	17	–	–	–
	Input Hp (max) **(C)**	–	–	–	20.42	**10.36**	6.87	27.34	**13.87**	9.19	35.02	**18.87**	12.51	35.02	**18.87**	12.51	–	–	–
66.43	Output torque, in-lb	–	–	–	24780	**24780**	24780	33180	**33180**	33180	42504	**45140**	45140	42504	**45140**	45140	–	–	–
	OHL input shaft	–	–	–	**(A)**	**713**	742	**(A)**	**843**	877	**(A)**	**949**	989	**(A)**	**1527**	1591	–	–	–
	OHL output shaft **(B)**	–	–	–	6464	**7974**	8992	6464	**7974**	8992	6464	**7974**	8992	6464	**7974**	8992	–	–	–
	Output RPM	44	**22**	15	44	**22**	15	44	**22**	15	44	**22**	15	44	**22**	15	–	–	–
	Input Hp (max) **(C)**	9.86	**5.00**	3.32	20.42	**10.36**	6.87	27.34	**13.87**	9.19	31.29	**16.06**	10.64	31.29	**16.06**	10.64	–	–	–
78.06	Output torque, in-lb	14065	**14065**	14065	29117	**29117**	29117	38987	**38987**	38987	44616	**45140**	45140	44616	**45140**	45140	–	–	–
	OHL input shaft	**(A)**	**452**	470	**(A)**	**711**	740	**(A)**	**841**	876	**(A)**	**953**	987	**(A)**	**1530**	1594	–	–	–
	OHL output shaft **(B)**	6464	**8992**	8992	6464	**8992**	8992	6464	**8992**	8992	6464	**8992**	8992	6464	**8992**	8992	–	–	–
	Output RPM	39	**20**	13	39	**20**	13	39	**20**	13	39	**20**	13	39	**20**	13	–	–	–
	Input Hp (max) **(C)**	9.86	**5.00**	3.32	20.42	**10.36**	6.87	27.34	**13.87**	9.19	27.93	**14.17**	9.39	27.93	**14.17**	9.39	–	–	–
88.46	Output torque, in-lb	15938	**15938**	15938	32995	**32995**	32995	44180	**44180**	44180	45140	**45140**	45140	45140	**45140**	45140	–	–	–
	OHL input shaft	**(A)**	**453**	472	**(A)**	**708**	738	**(A)**	**838**	873	**(A)**	**951**	990	**(A)**	**1532**	1595	–	–	–
	OHL output shaft **(B)**	7974	**8992**	8992	7974	**8992**	8992	7974	**8992**	8992	7974	**8992**	8992	7974	**8992**	8992	–	–	–
	Output RPM	33	**17**	11	33	**17**	11	33	**17**	11	33	**17**	11	33	**17**	11	–	–	–
	Input Hp (max) **(C)**	9.86	**5.00**	3.32	20.42	**10.36**	6.87	23.81	**12.08**	8.00	23.81	**12.08**	8.00	23.81	**12.08**	8.00	–	–	–
103.80	Output torque, in-lb	18703	**18703**	18703	38719	**38719**	38719	45140	**45140**	45140	45140	**45140**	45140	45140	**45140**	45140	–	–	–
	OHL input shaft	**(A)**	**456**	474	**(A)**	**709**	739	**(A)**	**841**	876	**(A)**	**954**	994	**(A)**	**1533**	1596	–	–	–
	OHL output shaft **(B)**	7974	**8992**	8992	7974	**8992**	8992	7974	**8992**	8992	7974	**8992**	8992	7974	**8992**	8992	–	–	–
	Output RPM	30	**15**	10	30	**15**	10	30	**15**	10	30	**15**	10	–	–	–	–	–	–
	Input Hp (max) **(C)**	9.86	**5.00**	3.32	20.42	**10.36**	6.87	21.82	**11.07**	7.34	21.82	**11.07**	7.34	–	–	–	–	–	–
113.24	Output torque, in-lb	20404	**20404**	20404	42239	**42239**	42239	45140	**45140**	45140	45140	**45140**	45140	–	–	–	–	–	–
	OHL input shaft	**(A)**	**456**	474	**(A)**	**712**	736	**(A)**	**842**	877	**(A)**	**955**	995	–	–	–	–	–	–
	OHL output shaft **(B)**	7974	**8992**	8992	7974	**8992**	8992	7974	**8992**	8992	7974	**8992**	8992	–	–	–	–	–	–
	Output RPM	28	**14**	9	28	**14**	9	28	**14**	9	28	**14**	9	–	–	–	–	–	–
	Input Hp (max) **(C)**	9.86	**5.00**	3.32	19.72	**10.15**	6.73	20.00	**10.15**	6.73	20.00	**10.15**	6.73	–	–	–	–	–	–
123.53	Output torque, in-lb	22257	**22257**	22257	44492	**45140**	45140	45140	**45140**	45140	45140	**45140**	45140	–	–	–	–	–	–
	OHL input shaft	**(A)**	**456**	474	**(A)**	**663**	741	**(A)**	**843**	877	**(A)**	**956**	995	–	–	–	–	–	–
	OHL output shaft **(B)**	7974	**8992**	8992	7974	**8992**	8992	7974	**8992**	8992	7974	**8992**	8992	–	–	–	–	–	–
	Output RPM	26	**13**	9	26	**13**	9	26	**13**	9	26	**13**	9	–	–	–	–	–	–
	Input Hp (max) **(C)**	9.86	**5.00**	3.32	18.54	**9.40**	6.23	18.54	**9.40**	6.23	18.54	**9.40**	6.23	–	–	–	–	–	–
133.30	Output torque, in-lb	24019	**24019**	24019	45140	**45140**	45140	45140	**45140**	45140	45140	**45140**	45140	–	–	–	–	–	–
	OHL input shaft	**(A)**	**455**	473	**(A)**	**682**	735	**(A)**	**843**	878	**(A)**	**957**	996	–	–	–	–	–	–
	OHL output shaft **(B)**	7974	**8992**	8992	7974	**8992**	8992	7974	**8992**	8992	7974	**8992**	8992	–	–	–	–	–	–

Service factor: 1.0

(A) (B) (C) - See footnotes page on inside back cover

Blank areas (-) indicate configuration not available

ILH 128

Size: H_1283

Triple reduction – Clamp collar, three-piece coupled, separate

NEMA motor frame		140TC			180TC			—			210TC			250TC			280TC		
IEC motor frame		90D			100D			112D			132D			160D			180D/200D		
Separate group		90			100			112			132			160			180		
Ratio	Output Rating data	3450	1750	1160	3450	1750	1160	3450	1750	1160	3450	1750	1160	3450	1750	1160	3450	1750	1160
	Output RPM	23	**12**	8	23	**12**	8	23	**12**	8	23	**12**	8	–	–	–	–	–	–
	Input Hp (max) **(C)**	9.86	**5.00**	3.32	16.58	**8.41**	5.58	16.58	**8.41**	5.58	16.58	**8.41**	5.58	–	–	–	–	–	–
148.99	Output torque, in-lb	26845	**26845**	26845	45140	**45140**	45140	45140	**45140**	45140	45140	**45140**	45140	–	–	–	–	–	–
	OHL input shaft	**(A)**	**453**	472	**(A)**	**707**	737	**(A)**	**844**	878	**(A)**	**957**	997	–	–	–	–	–	–
	OHL output shaft **(B)**	8992	**8992**	8992	8992	**8992**	8992	8992	**8992**	8992	8992	**8992**	8992	–	–	–	–	–	–
	Output RPM	22	**11**	7	22	**11**	7	22	**11**	7	22	**11**	7	–	–	–	–	–	–
	Input Hp (max) **(C)**	9.59	**5.00**	3.32	15.48	**7.85**	5.21	15.48	**7.85**	5.21	15.48	**7.85**	5.21	–	–	–	–	–	–
159.60	Output torque, in-lb	27974	**28756**	28756	45140	**45140**	45140	45140	**45140**	45140	45140	**45140**	45140	–	–	–	–	–	–
	OHL input shaft	**(A)**	**454**	470	**(A)**	**708**	738	**(A)**	**844**	879	**(A)**	**958**	997	–	–	–	–	–	–
	OHL output shaft **(B)**	8992	**8992**	8992	8992	**8992**	8992	8992	**8992**	8992	8992	**8992**	8992	–	–	–	–	–	–
	Output RPM	20	**10**	7	20	**10**	7	20	**10**	7	20	**10**	7	–	–	–	–	–	–
	Input Hp (max) **(C)**	9.22	**4.81**	3.32	14.40	**7.30**	4.84	14.40	**7.30**	4.84	14.40	**7.30**	4.84	–	–	–	–	–	–
171.62	Output torque, in-lb	28913	**29747**	30923	45140	**45140**	45140	45140	**45140**	45140	45140	**45140**	45140	–	–	–	–	–	–
	OHL input shaft	**(A)**	**453**	471	**(A)**	**710**	736	**(A)**	**844**	879	**(A)**	**958**	997	–	–	–	–	–	–
	OHL output shaft **(B)**	8992	**8992**	8992	8992	**8992**	8992	8992	**8992**	8992	8992	**8992**	8992	–	–	–	–	–	–
	Output RPM	19	**9**	6	19	**9**	6	19	**9**	6	19	**9**	6	–	–	–	–	–	–
	Input Hp (max) **(C)**	8.83	**4.61**	3.19	13.33	**6.76**	4.48	13.33	**6.76**	4.48	13.33	**6.76**	4.48	–	–	–	–	–	–
185.36	Output torque, in-lb	29904	**30774**	32081	45140	**45140**	45140	45140	**45140**	45140	45140	**45140**	45140	–	–	–	–	–	–
	OHL input shaft	**(A)**	**453**	470	**(A)**	**711**	737	**(A)**	**844**	871	**(A)**	**958**	997	–	–	–	–	–	–
	OHL output shaft **(B)**	8992	**8992**	8992	8992	**8992**	8992	8992	**8992**	8992	8992	**8992**	8992	–	–	–	–	–	–
	Output RPM	17	**9**	6	17	**9**	6	17	**9**	6	17	**9**	6	–	–	–	–	–	–
	Input Hp (max) **(C)**	8.43	**4.40**	3.04	12.28	**6.23**	4.13	12.28	**6.23**	4.13	12.28	**6.23**	4.13	–	–	–	–	–	–
201.22	Output torque, in-lb	30974	**31881**	33235	45140	**45140**	45140	45140	**45140**	45140	45140	**45140**	45140	–	–	–	–	–	–
	OHL input shaft	**(A)**	**453**	470	**(A)**	**709**	739	**(A)**	**838**	873	**(A)**	**958**	998	–	–	–	–	–	–
	OHL output shaft **(B)**	8992	**8992**	8992	8992	**8992**	8992	8992	**8992**	8992	8992	**8992**	8992	–	–	–	–	–	–
	Output RPM	16	**8**	5	16	**8**	5	16	**8**	5	–	–	–	–	–	–	–	–	–
	Input Hp (max) **(C)**	8.01	**4.18**	2.89	11.25	**5.70**	3.78	11.25	**5.70**	3.78	–	–	–	–	–	–	–	–	–
219.72	Output torque, in-lb	32151	**33094**	34502	45140	**45140**	45140	45140	**45140**	45140	–	–	–	–	–	–	–	–	–
	OHL input shaft	**(A)**	**452**	474	**(A)**	**710**	740	**(A)**	**839**	874	–	–	–	–	–	–	–	–	–
	OHL output shaft **(B)**	8992	**8992**	8992	8992	**8992**	8992	8992	**8992**	8992	–	–	–	–	–	–	–	–	–
	Output RPM	14	**7**	5	14	**7**	5	–	–	–	–	–	–	–	–	–	–	–	–
	Input Hp (max) **(C)**	7.51	**3.92**	2.71	10.05	**5.10**	3.38	–	–	–	–	–	–	–	–	–	–	–	–
245.93	Output torque, in-lb	33758	**34751**	36235	45140	**45140**	45140	–	–	–	–	–	–	–	–	–	–	–	–
	OHL input shaft	**(A)**	**456**	474	**(A)**	**712**	741	–	–	–	–	–	–	–	–	–	–	–	–
	OHL output shaft **(B)**	8992	**8992**	8992	8992	**8992**	8992	–	–	–	–	–	–	–	–	–	–	–	–
	Output RPM	13	**7**	4	13	**7**	4	–	–	–	–	–	–	–	–	–	–	–	–
	Input Hp (max) **(C)**	7.03	**3.74**	2.58	9.21	**4.67**	3.10	–	–	–	–	–	–	–	–	–	–	–	–
268.16	Output Torque, In–Lb	34418	**36115**	37654	45140	**45140**	45140	–	–	–	–	–	–	–	–	–	–	–	–
	OHL input shaft	**(A)**	**456**	474	**(A)**	**712**	742	–	–	–	–	–	–	–	–	–	–	–	–
	OHL output shaft **(B)**	8992	**8992**	8992	8992	**8992**	8992	–	–	–	–	–	–	–	–	–	–	–	–

Service factor: 1.0

(A) (B) (C) - See footnotes page on inside back cover

Blank areas (-) indicate configuration not available

ILH 128

Size: H_1284

Four-stage reduction – Clamp collar, three-piece coupled, separate

NEMA motor frame		56C			—			140TC			180TC			—			210TC		
IEC motor frame		71D			80D			90D			100D			112D			132D		
Separate group		71			80			90			100			112			132		
Ratio	Output Rating data	3450	1750	1160	3450	1750	1160	3450	1750	1160	3450	1750	1160	3450	1750	1160	3450	1750	1160
	Output RPM	10.76	**5.46**	3.62	10.76	**5.46**	3.62	10.76	**5.46**	3.62	10.76	**5.46**	3.62	10.76	**5.46**	3.62	10.76	**5.46**	3.62
	Input Hp (max) **(C)**	3.98	**2.02**	1.34	4.85	**2.46**	1.63	7.70	**3.91**	2.59	7.70	**3.91**	2.59	7.70	**3.91**	2.59	7.70	**3.91**	2.59
320.74	Output torque, in-lb	23320	**23334**	23352	28418	**28416**	28405	45140	**45140**	45140	45140	**45140**	45140	45140	**45140**	45140	45140	**45140**	45140
	OHL input shaft	(A)	(A)	(A)	(A)	(A)	(A)	(A)	(A)	(A)	(A)	(A)	(A)	(A)	(A)	(A)	(A)	(A)	(A)
	OHL output shaft **(B)**	7974	**8992**	8992	7974	**8992**	8992	7974	**8992**	8992	7974	**8992**	8992	7974	**8992**	8992	7974	**8992**	8992
	Output RPM	10.53	**5.34**	3.54	10.53	**5.34**	3.54	10.53	**5.34**	3.54	10.53	**5.34**	3.54	10.53	**5.34**	3.54	10.53	**5.34**	3.54
	Input Hp (max) **(C)**	3.98	**2.02**	1.34	4.85	**2.46**	1.63	7.54	**3.83**	2.54	7.54	**3.83**	2.54	7.54	**3.83**	2.54	7.54	**3.83**	2.54
327.50	Output torque, in-lb	23812	**23825**	23844	29017	**29015**	29004	45140	**45140**	45140	45140	**45140**	45140	45140	**45140**	45140	45140	**45140**	45140
	OHL input shaft	(A)	(A)	(A)	(A)	(A)	(A)	(A)	(A)	(A)	(A)	(A)	(A)	(A)	(A)	(A)	(A)	(A)	(A)
	OHL output shaft **(B)**	6464	**8992**	8992	6464	**8992**	8992	6464	**8992**	8992	6464	**8992**	8992	6464	**8992**	8992	6464	**8992**	8992
	Output RPM	9.20	**4.67**	3.09	9.20	**4.67**	3.09	9.20	**4.67**	3.09	9.20	**4.67**	3.09	9.20	**4.67**	3.09	9.20	**4.67**	3.09
	Input Hp (max) **(C)**	3.98	**2.02**	1.34	4.85	**2.46**	1.63	6.59	**3.34**	2.22	6.59	**3.34**	2.22	6.59	**3.34**	2.22	6.59	**3.34**	2.22
375.07	Output torque, in-lb	27270	**27286**	27307	33231	**33229**	33217	45140	**45140**	45140	45140	**45140**	45140	45140	**45140**	45140	45140	**45140**	45140
	OHL input shaft	(A)	(A)	(A)	(A)	(A)	(A)	(A)	(A)	(A)	(A)	(A)	(A)	(A)	(A)	(A)	(A)	(A)	(A)
	OHL output shaft **(B)**	7974	**8992**	8992	7974	**8992**	8992	7974	**8992**	8992	7974	**8992**	8992	7974	**8992**	8992	7974	**8992**	8992
	Output RPM	9.04	**4.58**	3.04	9.04	**4.58**	3.04	9.04	**4.58**	3.04	9.04	**4.58**	3.04	9.04	**4.58**	3.04	9.04	**4.58**	3.04
	Input Hp (max) **(C)**	3.98	**2.02**	1.34	4.85	**2.46**	1.63	6.47	**3.28**	2.18	6.47	**3.28**	2.18	6.47	**3.28**	2.18	6.47	**3.28**	2.18
381.71	Output torque, in-lb	27753	**27769**	27790	33819	**33817**	33804	45140	**45140**	45140	45140	**45140**	45140	45140	**45140**	45140	45140	**45140**	45140
	OHL input shaft	(A)	(A)	(A)	(A)	(A)	(A)	(A)	(A)	(A)	(A)	(A)	(A)	(A)	(A)	(A)	(A)	(A)	(A)
	OHL output shaft **(B)**	7974	**8992**	8992	7974	**8992**	8992	7974	**8992**	8992	7974	**8992**	8992	7974	**8992**	8992	7974	**8992**	8992
	Output RPM	8.25	**4.18**	2.77	8.25	**4.18**	2.77	8.25	**4.18**	2.77	8.25	**4.18**	2.77	8.25	**4.18**	2.77	8.25	**4.18**	2.77
	Input Hp (max) **(C)**	3.98	**2.02**	1.34	4.85	**2.46**	1.63	5.91	**3.00**	1.99	5.91	**3.00**	1.99	5.91	**3.00**	1.99	5.91	**3.00**	1.99
418.40	Output torque, in-lb	30421	**30438**	30462	37071	**37068**	37054	45140	**45140**	45140	45140	**45140**	45140	45140	**45140**	45140	45140	**45140**	45140
	OHL input shaft	(A)	(A)	(A)	(A)	(A)	(A)	(A)	(A)	(A)	(A)	(A)	(A)	(A)	(A)	(A)	(A)	(A)	(A)
	OHL output shaft **(B)**	6464	**8992**	8992	6464	**8992**	8992	6464	**8992**	8992	6464	**8992**	8992	6464	**8992**	8992	6464	**8992**	8992
	Output RPM	8.10	**4.11**	2.72	8.10	**4.11**	2.72	8.10	**4.11**	2.72	8.10	**4.11**	2.72	8.10	**4.11**	2.72	8.10	**4.11**	2.72
	Input Hp (max) **(C)**	3.98	**2.02**	1.34	4.85	**2.46**	1.63	5.80	**2.94**	1.95	5.80	**2.94**	1.95	5.80	**2.94**	1.95	5.80	**2.94**	1.95
426.18	Output torque, in-lb	30986	**31004**	31028	37760	**37757**	37743	45140	**45140**	45140	45140	**45140**	45140	45140	**45140**	45140	45140	**45140**	45140
	OHL input shaft	(A)	(A)	(A)	(A)	(A)	(A)	(A)	(A)	(A)	(A)	(A)	(A)	(A)	(A)	(A)	(A)	(A)	(A)
	OHL output shaft **(B)**	8992	**8992**	8992	8992	**8992**	8992	8992	**8992**	8992	8992	**8992**	8992	8992	**8992**	8992	8992	**8992**	8992
	Output RPM	7.29	**3.70**	2.45	7.29	**3.70**	2.45	7.29	**3.70**	2.45	7.29	**3.70**	2.45	7.29	**3.70**	2.45	7.29	**3.70**	2.45
	Input Hp (max) **(C)**	3.98	**2.02**	1.34	4.85	**2.46**	1.63	5.22	**2.65**	1.76	5.22	**2.65**	1.76	5.22	**2.65**	1.76	5.22	**2.65**	1.76
473.33	Output torque, in-lb	34414	**34434**	34461	41937	**41935**	41918	45140	**45140**	45140	45140	**45140**	45140	45140	**45140**	45140	45140	**45140**	45140
	OHL input shaft	(A)	(A)	(A)	(A)	(A)	(A)	(A)	(A)	(A)	(A)	(A)	(A)	(A)	(A)	(A)	(A)	(A)	(A)
	OHL output shaft **(B)**	7974	**8992**	8992	7974	**8992**	8992	7974	**8992**	8992	7974	**8992**	8992	7974	**8992**	8992	7974	**8992**	8992
	Output RPM	7.00	**3.55**	2.35	7.00	**3.55**	2.35	7.00	**3.55**	2.35	7.00	**3.55**	2.35	7.00	**3.55**	2.35	7.00	**3.55**	2.35
	Input Hp (max) **(C)**	3.98	**2.02**	1.34	4.85	**2.46**	1.63	5.01	**2.54**	1.68	5.01	**2.54**	1.68	5.01	**2.54**	1.68	5.01	**2.54**	1.68
493.16	Output torque, in-lb	35857	**35877**	35905	43695	**43692**	43675	45140	**45140**	45140	45140	**45140**	45140	45140	**45140**	45140	45140	**45140**	45140
	OHL input shaft	(A)	(A)	(A)	(A)	(A)	(A)	(A)	(A)	(A)	(A)	(A)	(A)	(A)	(A)	(A)	(A)	(A)	(A)
	OHL output shaft **(B)**	8992	**8992**	8992	8992	**8992**	8992	8992	**8992**	8992	8992	**8992**	8992	8992	**8992**	8992	8992	**8992**	8992
	Output RPM	6.51	**3.30**	2.19	6.51	**3.30**	2.19	6.51	**3.30**	2.19	6.51	**3.30**	2.19	6.51	**3.30**	2.19	6.51	**3.30**	2.19
	Input Hp (max) **(C)**	3.98	**2.02**	1.34	4.66	**2.36**	1.57	4.66	**2.36**	1.57	4.66	**2.36**	1.57	4.66	**2.36**	1.57	4.66	**2.36**	1.57
530.31	Output torque, in-lb	38557	**38579**	38609	45140	**45140**	45140	45140	**45140**	45140	45140	**45140**	45140	45140	**45140**	45140	45140	**45140**	45140
	OHL input shaft	(A)	(A)	(A)	(A)	(A)	(A)	(A)	(A)	(A)	(A)	(A)	(A)	(A)	(A)	(A)	(A)	(A)	(A)
	OHL output shaft **(B)**	8992	**8992**	8992	8992	**8992**	8992	8992	**8992**	8992	8992	**8992**	8992	8992	**8992**	8992	8992	**8992**	8992
	Output RPM	6.27	**3.18**	2.11	6.27	**3.18**	2.11	6.27	**3.18**	2.11	6.27	**3.18**	2.11	6.27	**3.18**	2.11	6.27	**3.18**	2.11
	Input Hp (max) **(C)**	3.98	**2.02**	1.34	4.49	**2.28**	1.51	4.49	**2.28**	1.51	4.49	**2.28**	1.51	4.49	**2.28**	1.51	4.49	**2.28**	1.51
550.62	Output torque, in-lb	40034	**40057**	40088	45140	**45140**	45140	45140	**45140**	45140	45140	**45140**	45140	45140	**45140**	45140	45140	**45140**	45140
	OHL input shaft	(A)	(A)	(A)	(A)	(A)	(A)	(A)	(A)	(A)	(A)	(A)	(A)	(A)	(A)	(A)	(A)	(A)	(A)
	OHL output shaft **(B)**	8992	**8992**	8992	8992	**8992**	8992	8992	**8992**	8992	8992	**8992**	8992	8992	**8992**	8992	8992	**8992**	8992
	Output RPM	5.61	**2.85**	1.89	5.61	**2.85**	1.89	5.61	**2.85**	1.89	5.61	**2.85**	1.89	5.61	**2.85**	1.89	5.61	**2.85**	1.89
	Input Hp (max) **(C)**	3.98	**2.02**	1.34	4.02	**2.04**	1.35	4.02	**2.04**	1.35	4.02	**2.04**	1.35	4.02	**2.04**	1.35	4.02	**2.04**	1.35
614.50	Output torque, in-lb	44678	**44704**	44738	45140	**45140**	45140	45140	**45140**	45140	45140	**45140**	45140	45140	**45140**	45140	45140	**45140**	45140
	OHL input shaft	(A)	(A)	(A)	(A)	(A)	(A)	(A)	(A)	(A)	(A)	(A)	(A)	(A)	(A)	(A)	(A)	(A)	(A)
	OHL output shaft **(B)**	7974	**8992**	8992	7974	**8992**	8992	7974	**8992**	8992	7974	**8992**	8992	7974	**8992**	8992	7974	**8992**	8992

Service factor: 1.0

(A) (B) (C) - See footnotes page on inside back cover

Blank areas (-) indicate configuration not available

ILH 128

Size: H_1284

Four-stage reduction – Clamp collar, three-piece coupled, separate

NEMA motor frame		56C			—			140TC			180TC			—			210TC		
IEC motor frame		71D			80D			90D			100D			112D			132D		
Separate group		71			80			90			100			112			132		
Ratio	**Output Rating data**	**3450**	**1750**	**1160**	**3450**	**1750**	**1160**	**3450**	**1750**	**1160**	**3450**	**1750**	**1160**	**3450**	**1750**	**1160**	**3450**	**1750**	**1160**
	Output RPM	5.46	**2.77**	1.84	5.46	**2.77**	1.84	5.46	**2.77**	1.84	5.46	**2.77**	1.84	5.46	**2.77**	1.84	5.46	**2.77**	1.84
	Input Hp (max) **(C)**	3.91	**1.98**	1.32	3.91	**1.98**	1.32	3.91	**1.98**	1.32	3.91	**1.98**	1.32	3.91	**1.98**	1.32	3.91	**1.98**	1.32
631.72	Output torque, in-lb	45140	**45140**	45140	45140	**45140**	45140	45140	**45140**	45140	45140	**45140**	45140	45140	**45140**	45140	45140	**45140**	45140
	OHL input shaft	(A)	(A)	(A)	(A)	(A)	(A)	(A)	(A)	(A)	(A)	(A)	(A)	(A)	(A)	(A)	(A)	(A)	(A)
	OHL output shaft **(B)**	8992	**8992**	8992	8992	**8992**	8992	8992	**8992**	8992	8992	**8992**	8992	8992	**8992**	8992	8992	**8992**	8992
	Output RPM	4.83	**2.45**	1.62	4.83	**2.45**	1.62	4.83	**2.45**	1.62	4.83	**2.45**	1.62	4.83	**2.45**	1.62	4.83	**2.45**	1.62
	Input Hp (max) **(C)**	3.46	**1.75**	1.16	3.46	**1.75**	1.16	3.46	**1.75**	1.16	3.46	**1.75**	1.16	3.46	**1.75**	1.16	3.46	**1.75**	1.16
714.49	Output torque, in-lb	45140	**45140**	45140	45140	**45140**	45140	45140	**45140**	45140	45140	**45140**	45140	45140	**45140**	45140	45140	**45140**	45140
	OHL input shaft	(A)	(A)	(A)	(A)	(A)	(A)	(A)	(A)	(A)	(A)	(A)	(A)	(A)	(A)	(A)	(A)	(A)	(A)
	OHL output shaft **(B)**	7974	**8992**	8992	7974	**8992**	8992	7974	**8992**	8992	7974	**8992**	8992	7974	**8992**	8992	7974	**8992**	8992
	Output RPM	4.32	**2.19**	1.45	4.32	**2.19**	1.45	4.32	**2.19**	1.45	4.32	**2.19**	1.45	4.32	**2.19**	1.45	4.32	**2.19**	1.45
	Input Hp (max) **(C)**	3.09	**1.57**	1.04	3.09	**1.57**	1.04	3.09	**1.57**	1.04	3.09	**1.57**	1.04	3.09	**1.57**	1.04	3.09	**1.57**	1.04
798.59	Output torque, in-lb	45140	**45140**	45140	45140	**45140**	45140	45140	**45140**	45140	45140	**45140**	45140	45140	**45140**	45140	45140	**45140**	45140
	OHL input shaft	(A)	(A)	(A)	(A)	(A)	(A)	(A)	(A)	(A)	(A)	(A)	(A)	(A)	(A)	(A)	(A)	(A)	(A)
	OHL output shaft **(B)**	8992	**8992**	8992	8992	**8992**	8992	8992	**8992**	8992	8992	**8992**	8992	8992	**8992**	8992	8992	**8992**	8992
	Output RPM	4.21	**2.14**	1.42	4.21	**2.14**	1.42	4.21	**2.14**	1.42	4.21	**2.14**	1.42	4.21	**2.14**	1.42	–	–	–
	Input Hp (max) **(C)**	3.02	**1.53**	1.01	3.02	**1.53**	1.01	3.02	**1.53**	1.01	3.02	**1.53**	1.01	3.02	**1.53**	1.01	–	–	–
818.73	Output torque, in-lb	45140	**45140**	45140	45140	**45140**	45140	45140	**45140**	45140	45140	**45140**	45140	45140	**45140**	45140	–	–	–
	OHL input shaft	(A)	(A)	(A)	(A)	**(A)**	**(A)**	**(A)**	**(A)**	**(A)**	**(A)**	**(A)**	**(A)**	**(A)**	**(A)**	**(A)**	–	–	–
	OHL output shaft **(B)**	7974	**8992**	8992	7974	**8992**	8992	7974	**8992**	8992	7974	**8992**	8992	7974	**8992**	8992	–	–	–
	Output RPM	3.75	**1.90**	1.26	3.75	**1.90**	1.26	3.75	**1.90**	1.26	3.75	**1.90**	1.26	3.75	**1.90**	1.26	3.75	**1.90**	1.26
	Input Hp (max) **(C)**	2.69	**1.36**	0.90	2.69	**1.36**	0.90	2.69	**1.36**	0.90	2.69	**1.36**	0.90	2.69	**1.36**	0.90	2.69	**1.36**	0.90
919.88	Output torque, in-lb	45140	**45140**	45140	45140	**45140**	45140	45140	**45140**	45140	45140	**45140**	45140	45140	**45140**	45140	45140	**45140**	45140
	OHL input shaft	(A)	(A)	(A)	(A)	(A)	(A)	(A)	(A)	(A)	(A)	(A)	(A)	(A)	(A)	(A)	(A)	(A)	(A)
	OHL output shaft **(B)**	8992	**8992**	8992	8992	**8992**	8992	8992	**8992**	8992	8992	**8992**	8992	8992	**8992**	8992	8992	**8992**	8992
	Output RPM	3.65	**1.85**	1.23	3.65	**1.85**	1.23	3.65	**1.85**	1.23	3.65	**1.85**	1.23	3.65	**1.85**	1.23	3.65	**1.85**	1.23
	Input Hp (max) **(C)**	2.62	**1.33**	0.88	2.62	**1.33**	0.88	2.62	**1.33**	0.88	2.62	**1.33**	0.88	2.62	**1.33**	0.88	2.62	**1.33**	0.88
944.83	Output torque, in-lb	45140	**45140**	45140	45140	**45140**	45140	45140	**45140**	45140	45140	**45140**	45140	45140	**45140**	45140	45140	**45140**	45140
	OHL input shaft	(A)	(A)	(A)	(A)	(A)	(A)	(A)	(A)	(A)	(A)	(A)	(A)	(A)	(A)	(A)	(A)	(A)	(A)
	OHL output shaft **(B)**	8992	**8992**	8992	8992	**8992**	8992	8992	**8992**	8992	8992	**8992**	8992	8992	**8992**	8992	8992	**8992**	8992
	Output RPM	3.27	**1.66**	1.10	3.27	**1.66**	1.10	3.27	**1.66**	1.10	3.27	**1.66**	1.10	3.27	**1.66**	1.10	–	–	–
	Input Hp (max) **(C)**	2.34	**1.19**	0.79	2.34	**1.19**	0.79	2.34	**1.19**	0.79	2.34	**1.19**	0.79	2.34	**1.19**	0.79	–	–	–
1055.74	Output torque, in-lb	45140	**45140**	45140	45140	**45140**	45140	45140	**45140**	45140	45140	**45140**	45140	45140	**45140**	45140	–	–	–
	OHL input shaft	(A)	(A)	(A)	(A)	(A)	(A)	**(A)**	**(A)**	**(A)**	**(A)**	**(A)**	**(A)**	**(A)**	**(A)**	**(A)**	–	–	–
	OHL output shaft **(B)**	7974	**8992**	8992	7974	**8992**	8992	7974	**8992**	8992	7974	**8992**	8992	7974	**8992**	8992	–	–	–
	Output RPM	3.13	**1.59**	1.05	3.13	**1.59**	1.05	3.13	**1.59**	1.05	3.13	**1.59**	1.05	3.13	**1.59**	1.05	3.13	**1.59**	1.05
	Input Hp (max) **(C)**	2.24	**1.14**	0.75	2.24	**1.14**	0.75	2.24	**1.14**	0.75	2.24	**1.14**	0.75	2.24	**1.14**	0.75	2.24	**1.14**	0.75
1101.80	Output torque, in-lb	45140	**45140**	45140	45140	**45140**	45140	45140	**45140**	45140	45140	**45140**	45140	45140	**45140**	45140	45140	**45140**	45140
	OHL input shaft	(A)	(A)	(A)	(A)	(A)	(A)	(A)	(A)	(A)	(A)	(A)	(A)	(A)	(A)	(A)	(A)	(A)	(A)
	OHL output shaft **(B)**	8992	**8992**	8992	8992	**8992**	8992	8992	**8992**	8992	8992	**8992**	8992	8992	**8992**	8992	8992	**8992**	8992
	Output RPM	2.90	**1.47**	0.97	2.90	**1.47**	0.97	2.90	**1.47**	0.97	2.90	**1.47**	0.97	2.90	**1.47**	0.97	2.90	**1.47**	0.97
	Input Hp (max) **(C)**	2.07	**1.05**	0.70	2.07	**1.05**	0.70	2.07	**1.05**	0.70	2.07	**1.05**	0.70	2.07	**1.05**	0.70	2.07	**1.05**	0.70
1191.22	Output torque, in-lb	45140	**45140**	45140	45140	**45140**	45140	45140	**45140**	45140	45140	**45140**	45140	45140	**45140**	45140	45140	**45140**	45140
	OHL input shaft	(A)	(A)	(A)	(A)	(A)	(A)	(A)	(A)	(A)	(A)	(A)	(A)	(A)	(A)	(A)	(A)	(A)	(A)
	OHL output shaft **(B)**	8992	**8992**	8992	8992	**8992**	8992	8992	**8992**	8992	8992	**8992**	8992	8992	**8992**	8992	8992	**8992**	8992
	Output RPM	2.78	**1.41**	0.93	2.78	**1.41**	0.93	2.78	**1.41**	0.93	2.78	**1.41**	0.93	2.78	**1.41**	0.93	–	–	–
	Input Hp (max) **(C)**	1.99	**1.01**	0.67	1.99	**1.01**	0.67	1.99	**1.01**	0.67	1.99	**1.01**	0.67	1.99	**1.01**	0.67	–	–	–
1240.81	Output torque, in-lb	45140	**45140**	45140	45140	**45140**	45140	45140	**45140**	45140	45140	**45140**	45140	45140	**45140**	45140	–	–	–
	OHL input shaft	(A)	(A)	(A)	(A)	**(A)**	**(A)**	**(A)**	**(A)**	**(A)**	**(A)**	**(A)**	**(A)**	**(A)**	**(A)**	**(A)**	–	–	–
	OHL output shaft **(B)**	8992	**8992**	8992	8992	**8992**	8992	8992	**8992**	8992	8992	**8992**	8992	8992	**8992**	8992	–	–	–
	Output RPM	2.45	**1.24**	0.82	2.45	**1.24**	0.82	2.45	**1.24**	0.82	2.45	**1.24**	0.82	–	–	–	–	–	–
	Input Hp (max) **(C)**	1.76	**0.89**	0.59	1.76	**0.89**	0.59	1.76	**0.89**	0.59	1.76	**0.89**	0.59	–	–	–	–	–	–
1407.67	Output torque, in-lb	45140	**45140**	45140	45140	**45140**	45140	45140	**45140**	45140	45140	**45140**	45140	–	–	–	–	–	–
	OHL input shaft	(A)	**(A)**	**(A)**	**(A)**	**(A)**	**(A)**	**(A)**	**(A)**	**(A)**	**(A)**	**(A)**	**(A)**	–	–	–	–	–	–
	OHL output shaft **(B)**	8992	**8992**	8992	8992	**8992**	8992	8992	**8992**	8992	8992	**8992**	8992	–	–	–	–	–	–

Service factor: 1.0

(A) (B) (C) - See footnotes page on inside back cover

Blank areas (-) indicate configuration not available

ILH 128

Size: H_1284

Four-stage reduction – Clamp collar, three-piece coupled, separate

NEMA motor frame		56C			—			140TC			180TC			—			210TC		
IEC motor frame		71D			80D			90D			100D			112D			132D		
Separate group		71			80			90			100			112			132		
Ratio	Output Rating data	3450	1750	1160	3450	1750	1160	3450	1750	1160	3450	1750	1160	3450	1750	1160	3450	1750	1160
	Output RPM	2.25	**1.14**	0.76	2.25	**1.14**	0.76	2.25	**1.14**	0.76	–	–	–	–	–	–	–	–	–
	Input Hp (max) **(C)**	1.61	**0.82**	0.54	1.61	**0.82**	0.54	1.61	**0.82**	0.54	–	–	–	–	–	–	–	–	–
1531.77	Output torque, in-lb	45140	**45140**	45140	45140	**45140**	45140	45140	**45140**	45140	–	–	–	–	–	–	–	–	–
	OHL input shaft	(A)	(A)	(A)	(A)	**(A)**	**(A)**	**(A)**	**(A)**	**(A)**	–	–	–	–	–	–	–	–	–
	OHL output shaft **(B)**	7974	**8992**	8992	7974	**8992**	8992	7974	**8992**	8992	–	–	–	–	–	–	–	–	–
	Output RPM	2.16	**1.10**	0.73	2.16	**1.10**	0.73	2.16	**1.10**	0.73	2.16	**1.10**	0.73	2.16	**1.10**	0.73	–	–	–
	Input Hp (max) **(C)**	1.55	**0.79**	0.52	1.55	**0.79**	0.52	1.55	**0.79**	0.52	1.55	**0.79**	0.52	1.55	**0.79**	0.52	–	–	–
1593.66	Output torque, in-lb	45140	**45140**	45140	45140	**45140**	45140	45140	**45140**	45140	45140	**45140**	45140	45140	**45140**	45140	–	–	–
	OHL input shaft	(A)	(A)	(A)	**(A)**	**(A)**	**(A)**	**(A)**	**(A)**	**(A)**	**(A)**	**(A)**	**(A)**	**(A)**	**(A)**	**(A)**	–	–	–
	OHL output shaft **(B)**	8992	**8992**	8992	8992	**8992**	8992	8992	**8992**	8992	8992	**8992**	8992	8992	**8992**	8992	–	–	–
	Output RPM	1.99	**1.01**	0.67	1.99	**1.01**	0.67	1.99	**1.01**	0.67	–	–	–	–	–	–	–	–	–
	Input Hp (max) **(C)**	1.43	**0.72**	0.48	1.43	**0.72**	0.48	1.43	**0.72**	0.48	–	–	–	–	–	–	–	–	–
1729.93	Output torque, in-lb	45140	**45140**	45140	45140	**45140**	45140	45140	**45140**	45140	–	–	–	–	–	–	–	–	–
	OHL input shaft	**(A)**	**(A)**	**(A)**	**(A)**	**(A)**	**(A)**	**(A)**	**(A)**	**(A)**	–	–	–	–	–	–	–	–	–
	OHL output shaft **(B)**	8992	**8992**	8992	8992	**8992**	8992	8992	**8992**	8992	–	–	–	–	–	–	–	–	–
	Output RPM	1.87	**0.95**	0.63	1.87	**0.95**	0.63	1.87	**0.95**	0.63	–	–	–	–	–	–	–	–	–
	Input Hp (max) **(C)**	1.34	**0.68**	0.45	1.34	**0.68**	0.45	1.34	**0.68**	0.45	–	–	–	–	–	–	–	–	–
1847.48	Output torque, in-lb	45140	**45140**	45140	45140	**45140**	45140	45140	**45140**	45140	–	–	–	–	–	–	–	–	–
	OHL input shaft	(A)	(A)	(A)	(A)	(A)	(A)	**(A)**	**(A)**	**(A)**	–	–	–	–	–	–	–	–	–
	OHL output shaft **(B)**	8992	**8992**	8992	8992	**8992**	8992	8992	**8992**	8992	–	–	–	–	–	–	–	–	–
	Output RPM	1.74	**0.88**	0.59	1.74	**0.88**	0.59	1.74	**0.88**	0.59	–	–	–	–	–	–	–	–	–
	Input Hp (max) **(C)**	1.25	**0.63**	0.42	1.25	**0.63**	0.42	1.25	**0.63**	0.42	–	–	–	–	–	–	–	–	–
1979.04	Output torque, in-lb	45140	**45140**	45140	45140	**45140**	45140	45140	**45140**	45140	–	–	–	–	–	–	–	–	–
	OHL input shaft	(A)	(A)	**(A)**	**(A)**	**(A)**	**(A)**	**(A)**	**(A)**	**(A)**	–	–	–	–	–	–	–	–	–
	OHL output shaft **(B)**	8992	**8992**	8992	8992	**8992**	8992	8992	**8992**	8992	–	–	–	–	–	–	–	–	–
	Output RPM	1.66	**0.84**	0.56	1.66	**0.84**	0.56	1.66	**0.84**	0.56	–	–	–	–	–	–	–	–	–
	Input Hp (max) **(C)**	1.19	**0.60**	0.40	1.19	**0.60**	0.40	1.19	**0.60**	0.40	–	–	–	–	–	–	–	–	–
2072.32	Output torque, in-lb	45140	**45140**	45140	45140	**45140**	45140	45140	**45140**	45140	–	–	–	–	–	–	–	–	–
	OHL input shaft	**(A)**	**(A)**	**(A)**	**(A)**	**(A)**	**(A)**	**(A)**	**(A)**	**(A)**	–	–	–	–	–	–	–	–	–
	OHL output shaft **(B)**	8992	**8992**	8992	8992	**8992**	8992	8992	**8992**	8992	–	–	–	–	–	–	–	–	–
	Output RPM	1.53	**0.78**	0.52	1.53	**0.78**	0.52	1.53	**0.78**	0.52	–	–	–	–	–	–	–	–	–
	Input Hp (max) **(C)**	1.10	**0.56**	0.37	1.10	**0.56**	0.37	1.10	**0.56**	0.37	–	–	–	–	–	–	–	–	–
2249.64	Output torque, in-lb	45140	**45140**	45140	45140	**45140**	45140	45140	**45140**	45140	–	–	–	–	–	–	–	–	–
	OHL input shaft	(A)	(A)	(A)	(A)	(A)	(A)	(A)	(A)	(A)	–	–	–	–	–	–	–	–	–
	OHL output shaft **(B)**	8992	**8992**	8992	8992	**8992**	8992	8992	**8992**	8992	–	–	–	–	–	–	–	–	–
	Output RPM	1.38	**0.70**	0.46	1.38	**0.70**	0.46	1.38	**0.70**	0.46	–	–	–	–	–	–	–	–	–
	Input Hp (max) **(C)**	0.99	**0.50**	0.33	0.99	**0.50**	0.33	0.99	**0.50**	0.33	–	–	–	–	–	–	–	–	–
2495.13	Output torque, in-lb	45140	**45140**	45140	45140	**45140**	45140	45140	**45140**	45140	–	–	–	–	–	–	–	–	–
	OHL input shaft	(A)	(A)	(A)	(A)	(A)	(A)	(A)	(A)	(A)	–	–	–	–	–	–	–	–	–
	OHL output shaft **(B)**	8992	**8992**	8992	8992	**8992**	8992	8992	**8992**	8992	–	–	–	–	–	–	–	–	–

Service factor: 1.0

(A) (B) (C) - See footnotes page on inside back cover

Blank areas (-) indicate configuration not available

ILH 128

Size: H_1285

Five-stage reduction – Clamp collar, three-piece coupled, separate

NEMA motor frame		56C			—			140TC			180TC			—		
IEC motor frame		71D			80D			90D			100D			112D		
Separate group		71			80			90			100			112		
Ratio	**Output Rating data**	**3450**	**1750**	**1160**	**3450**	**1750**	**1160**	**3450**	**1750**	**1160**	**3450**	**1750**	**1160**	**3450**	**1750**	**1160**
	Output RPM	1.32	**0.67**	0.44	1.32	**0.67**	0.44	1.32	**0.67**	0.44	1.32	**0.67**	0.44	1.32	**0.67**	0.44
	Input Hp (max) **(C)**	0.95	**0.48**	0.32	0.95	**0.48**	0.32	0.95	**0.48**	0.32	0.95	**0.48**	0.32	0.95	**0.48**	0.32
2614.77	Output torque, in-lb	45140	**45140**	45140	45140	**45140**	45140	45140	**45140**	45140	45140	**45140**	45140	45140	**45140**	45140
	OHL input shaft	(A)	(A)	(A)	(A)	(A)	(A)	(A)	(A)	(A)	(A)	(A)	(A)	(A)	(A)	(A)
	OHL output shaft **(B)**	8992	**8992**	8992	8992	**8992**	8992	8992	**8992**	8992	8992	**8992**	8992	8992	**8992**	8992
	Output RPM	1.13	**0.57**	0.38	1.13	**0.57**	0.38	1.13	**0.57**	0.38	1.13	**0.57**	0.38	1.13	**0.57**	0.38
	Input Hp (max) **(C)**	0.81	**0.41**	0.27	0.81	**0.41**	0.27	0.81	**0.41**	0.27	0.81	**0.41**	0.27	0.81	**0.41**	0.27
3053.15	Output torque, in-lb	45140	**45140**	45140	45140	**45140**	45140	45140	**45140**	45140	45140	**45140**	45140	45140	**45140**	45140
	OHL input shaft	(A)	(A)	(A)	(A)	(A)	(A)	(A)	(A)	(A)	(A)	(A)	(A)	(A)	(A)	(A)
	OHL output shaft **(B)**	8992	**8992**	8992	8992	**8992**	8992	8992	**8992**	8992	8992	**8992**	8992	8992	**8992**	8992
	Output RPM	1.03	**0.52**	0.35	1.03	**0.52**	0.35	1.03	**0.52**	0.35	1.03	**0.52**	0.35	1.03	**0.52**	0.35
	Input Hp (max) **(C)**	0.74	**0.37**	0.25	0.74	**0.37**	0.25	0.74	**0.37**	0.25	0.74	**0.37**	0.25	0.74	**0.37**	0.25
3343.62	Output torque, in-lb	45140	**45140**	45140	45140	**45140**	45140	45140	**45140**	45140	45140	**45140**	45140	45140	**45140**	45140
	OHL input shaft	(A)	(A)	(A)	(A)	(A)	(A)	(A)	(A)	(A)	(A)	(A)	(A)	(A)	(A)	(A)
	OHL output shaft **(B)**	8992	**8992**	8992	8992	**8992**	8992	8992	**8992**	8992	8992	**8992**	8992	8992	**8992**	8992
	Output RPM	1.00	**0.51**	0.34	1.00	**0.51**	0.34	1.00	**0.51**	0.34	1.00	**0.51**	0.34	–	–	–
	Input Hp (max) **(C)**	0.72	**0.36**	0.24	0.72	**0.36**	0.24	0.72	**0.36**	0.24	0.72	**0.36**	0.24	–	–	–
3437.20	Output torque, in-lb	45140	**45140**	45140	45140	**45140**	45140	45140	**45140**	45140	45140	**45140**	45140	–	–	–
	OHL input shaft	(A)	(A)	(A)	(A)	(A)	(A)	(A)	(A)	(A)	(A)	(A)	**(A)**	–	–	–
	OHL output shaft **(B)**	8992	**8992**	8992	8992	**8992**	8992	8992	**8992**	8992	8992	**8992**	8992	–	–	–
	Output RPM	0.88	**0.45**	0.30	0.88	**0.45**	0.30	0.88	**0.45**	0.30	0.88	**0.45**	0.30	–	–	–
	Input Hp (max) **(C)**	0.63	**0.32**	0.21	0.63	**0.32**	0.21	0.63	**0.32**	0.21	0.63	**0.32**	0.21	–	–	–
3924.55	Output torque, in-lb	45140	**45140**	45140	45140	**45140**	45140	45140	**45140**	45140	45140	**45140**	45140	–	–	–
	OHL input shaft	(A)	(A)	(A)	(A)	(A)	**(A)**	**(A)**	**(A)**	**(A)**	**(A)**	**(A)**	**(A)**	–	–	–
	OHL output shaft **(B)**	7974	**8992**	8992	7974	**8992**	8992	7974	**8992**	8992	7974	**8992**	8992	–	–	–
	Output RPM	0.76	**0.38**	0.25	0.76	**0.38**	0.25	0.76	**0.38**	0.25	0.76	**0.38**	0.25	–	–	–
	Input Hp (max) **(C)**	0.54	**0.28**	0.18	0.54	**0.28**	0.18	0.54	**0.28**	0.18	0.54	**0.28**	0.18	–	–	–
4553.08	Output torque, in-lb	45140	**45140**	45140	45140	**45140**	45140	45140	**45140**	45140	45140	**45140**	45140	–	–	–
	OHL input shaft	(A)	(A)	(A)	(A)	(A)	**(A)**	**(A)**	**(A)**	**(A)**	**(A)**	**(A)**	**(A)**	–	–	–
	OHL output shaft **(B)**	8992	**8992**	8992	8992	**8992**	8992	8992	**8992**	8992	8992	**8992**	8992	–	–	–
	Output RPM	0.67	**0.34**	0.23	0.67	**0.34**	0.23	0.67	**0.34**	0.23	–	–	–	–	–	–
	Input Hp (max) **(C)**	0.48	**0.24**	0.16	0.48	**0.24**	0.16	0.48	**0.24**	0.16	–	–	–	–	–	–
5138.83	Output torque, in-lb	45140	**45140**	45140	45140	**45140**	45140	45140	**45140**	45140	–	–	–	–	–	–
	OHL input shaft	**(A)**	**(A)**	**(A)**	**(A)**	**(A)**	**(A)**	**(A)**	**(A)**	**(A)**	–	–	–	–	–	–
	OHL output shaft **(B)**	7974	**8992**	8992	7974	**8992**	8992	7974	**8992**	8992	–	–	–	–	–	–
	Output RPM	0.58	**0.30**	0.20	0.58	**0.30**	0.20	0.58	**0.30**	0.20	–	–	–	–	–	–
	Input Hp (max) **(C)**	0.42	**0.21**	0.14	0.42	**0.21**	0.14	0.42	**0.21**	0.14	–	–	–	–	–	–
5914.78	Output torque, in-lb	45140	**45140**	45140	45140	**45140**	45140	45140	**45140**	45140	–	–	–	–	–	–
	OHL input shaft	(A)	(A)	(A)	(A)	(A)	**(A)**	**(A)**	**(A)**	**(A)**	–	–	–	–	–	–
	OHL output shaft **(B)**	8992	**8992**	8992	8992	**8992**	8992	8992	**8992**	8992	–	–	–	–	–	–
	Output RPM	0.51	**0.26**	0.17	0.51	**0.26**	0.17	0.51	**0.26**	0.17	–	–	–	–	–	–
	Input Hp (max) **(C)**	0.37	**0.19**	0.12	0.37	**0.19**	0.12	0.37	**0.19**	0.12	–	–	–	–	–	–
6761.17	Output torque, in-lb	45140	**45140**	45140	45140	**45140**	45140	45140	**45140**	45140	–	–	–	–	–	–
	OHL input shaft	**(A)**	**(A)**	**(A)**	**(A)**	**(A)**	**(A)**	**(A)**	**(A)**	**(A)**	–	–	–	–	–	–
	OHL output shaft **(B)**	8992	**8992**	8992	8992	**8992**	8992	8992	**8992**	8992	–	–	–	–	–	–
	Output RPM	0.49	**0.25**	0.16	0.49	**0.25**	0.16	0.49	**0.25**	0.16	–	–	–	–	–	–
	Input Hp (max) **(C)**	0.35	**0.18**	0.12	0.35	**0.18**	0.12	0.35	**0.18**	0.12	–	–	–	–	–	–
7081.04	Output torque, in-lb	45140	**45140**	45140	45140	**45140**	45140	45140	**45140**	45140	–	–	–	–	–	–
	OHL input shaft	(A)	(A)	(A)	(A)	(A)	(A)	(A)	(A)	(A)	–	–	–	–	–	–
	OHL output shaft **(B)**	8992	**8992**	8992	8992	**8992**	8992	8992	**8992**	8992	–	–	–	–	–	–

Service factor: 1.0

(A) (B) (C) - See footnotes page on inside back cover

Blank areas (-) indicate configuration not available

ILH 148

Size: H_1482

Double reduction – Clamp collar, three-piece coupled, separate

NEMA motor frame		210TC			250TC			280TC			320TC			360TC		
IEC motor frame		132D			160D			180D/200D			225D			250D		
Separate group		132			160			180			225			250		
Ratio	Output Rating data	3450	1750	1160	3450	1750	1160	3450	1750	1160	3450	1750	1160	3450	1750	1160
	Output RPM	–	–	–	701	**356**	236	701	**356**	236	701	**356**	236	701	**356**	236
	Input Hp (max) **(C)**	–	–	–	89.63	**45.47**	30.14	182.56	**92.60**	61.38	250.63	**137.51**	90.92	265.03	**144.74**	99.71
4.92	Output torque, in-lb	–	–	–	8056	**8056**	8056	16408	**16408**	16408	22526	**24365**	24303	23821	**25647**	26655
	OHL input shaft	–	–	–	**(A)**	**1523**	1586	**(A)**	**1745**	2102	**(A)**	**2182**	2274	**(A)**	**2111**	2528
	OHL output shaft **(B)**	–	–	–	**(A)**	**5381**	6087	**(A)**	**5381**	6087	**(A)**	**5381**	6087	**(A)**	**5381**	6087
	Output RPM	–	–	–	537	**272**	180	537	**272**	180	537	**272**	180	537	**272**	180
	Input Hp (max) **(C)**	–	–	–	89.61	**45.45**	30.13	182.52	**92.58**	61.37	233.81	**127.69**	87.76	230.10	**125.68**	86.60
6.43	Output torque, in-lb	–	–	–	10526	**10526**	10526	21439	**21439**	21439	27464	**29570**	30660	27028	**29103**	30255
	OHL input shaft	–	–	–	**(A)**	**1488**	1585	**(A)**	**1640**	1997	**(A)**	**2124**	2261	**(A)**	**2108**	2525
	OHL output shaft **(B)**	–	–	–	**(A)**	**5381**	6087	**(A)**	**5381**	6087	**(A)**	**5381**	6087	**(A)**	**5381**	6087
	Output RPM	456	**231**	153	456	**231**	153	456	**231**	153	456	**231**	153	456	**231**	153
	Input Hp (max) **(C)**	60.79	**32.63**	21.71	89.65	**45.48**	30.14	182.59	**92.62**	61.39	212.59	**116.13**	80.00	209.12	**114.24**	78.71
7.57	Output torque, in-lb	8407	**8896**	8927	12398	**12398**	12398	25250	**25250**	25250	29399	**31660**	32905	28920	**31145**	32374
	OHL input shaft	**(A)**	**949**	987	**(A)**	**1451**	1580	**(A)**	**1546**	1914	**(A)**	**2081**	2262	**(A)**	**2069**	2521
	OHL output shaft **(B)**	**(A)**	**6087**	6751	**(A)**	**6087**	6751	**(A)**	**6087**	6751	**(A)**	**6087**	6751	**(A)**	**6087**	6751
	Output RPM	–	–	–	392	**199**	132	392	**199**	132	392	**199**	132	392	**199**	132
	Input Hp (max) **(C)**	–	–	–	89.59	**45.44**	30.12	182.47	**92.56**	61.35	250.50	**137.44**	90.87	264.90	**144.67**	99.67
8.79	Output torque, in-lb	–	–	–	14386	**14386**	14386	29300	**29300**	29300	40224	**43509**	43399	42537	**45797**	47598
	OHL input shaft	–	–	–	**(A)**	**1523**	1587	**(A)**	**1745**	2102	**(A)**	**2182**	2274	**(A)**	**2111**	2528
	OHL output shaft **(B)**	–	–	–	**(A)**	**6087**	6751	**(A)**	**6087**	6751	**(A)**	**6087**	6751	**(A)**	**6087**	6751
	Output RPM	–	–	–	301	**152**	101	301	**152**	101	301	**152**	101	301	**152**	101
	Input Hp (max) **(C)**	–	–	–	89.63	**45.46**	30.14	182.55	**92.60**	61.38	233.85	**127.71**	87.78	230.14	**125.70**	86.62
11.48	Output torque, in-lb	–	–	–	18797	**18797**	18797	38284	**38284**	38284	49043	**52803**	54750	48265	**51970**	54027
	OHL input shaft	–	–	–	**(A)**	**1488**	1585	**(A)**	**1640**	1994	**(A)**	**2124**	2261	**(A)**	**2108**	2523
	OHL output shaft **(B)**	–	–	–	5381	**6751**	6751	5381	**6751**	6751	5381	**6751**	6751	5381	**6751**	6751
	Output RPM	255	**129**	86	255	**129**	86	255	**129**	86	255	**129**	86	255	**129**	86
	Input Hp (max) **(C)**	60.78	**32.63**	21.70	89.64	**45.47**	30.14	182.56	**92.60**	61.38	212.56	**116.11**	79.99	209.09	**114.22**	78.70
13.52	Output torque, in-lb	15012	**15886**	15942	22139	**22139**	22139	45090	**45090**	45090	52498	**56535**	58760	51642	**55616**	57811
	OHL input shaft	**(A)**	**949**	987	**(A)**	**1451**	1580	**(A)**	**1546**	1914	**(A)**	**2081**	2262	**(A)**	**2069**	2520
	OHL output shaft **(B)**	5381	**6751**	7372	5381	**6751**	7372	**(A)**	**6751**	7372	5381	**6751**	7372	5381	**6751**	7372
	Output RPM	222	**113**	75	222	**113**	75	222	**113**	75	222	**113**	75	222	**113**	75
	Input Hp (max) **(C)**	59.06	**31.72**	21.35	89.62	**45.46**	30.13	181.36	**92.58**	61.37	195.12	**106.59**	73.43	191.88	**104.82**	72.22
15.51	Output torque, in-lb	16734	**17717**	17995	25393	**25393**	25393	51386	**51716**	51716	55284	**59537**	61876	54367	**58553**	60860
	OHL input shaft	**(A)**	**946**	985	**(A)**	**1415**	1585	**(A)**	**1309**	1833	**(A)**	**2048**	2285	**(A)**	**2037**	2516
	OHL output shaft **(B)**	6087	**6751**	7372	6087	**6751**	7372	6087	**6751**	7372	6087	**6751**	7372	6087	**6751**	7372
	Output RPM	202	**102**	68	202	**102**	68	202	**102**	68	202	**102**	68	202	**102**	68
	Input Hp (max) **(C)**	57.66	**30.96**	20.85	89.64	**45.47**	30.14	170.83	**92.61**	61.39	183.18	**100.06**	68.93	180.10	**98.39**	67.79
17.09	Output torque, in-lb	18002	**19058**	19360	27987	**27987**	27987	53333	**57000**	57000	57188	**61584**	64002	56226	**60555**	62949
	OHL input shaft	**(A)**	**944**	983	**(A)**	**1384**	1584	**(A)**	**1123**	1760	**(A)**	**2027**	2287	**(A)**	**2016**	2514
	OHL output shaft **(B)**	6087	**6751**	7372	6087	**6751**	7372	6087	**6751**	7372	6087	**6751**	7372	6087	**6751**	7372
	Output RPM	171	**87**	57	171	**87**	57	171	**87**	57	171	**87**	57	171	**87**	57
	Input Hp (max) **(C)**	54.80	**29.43**	19.82	89.64	**45.47**	30.14	153.47	**92.60**	61.38	163.29	**89.22**	61.47	160.52	**87.69**	60.43
20.21	Output torque, in-lb	20232	**21422**	21763	33094	**33094**	33094	56662	**67402**	67402	60286	**64938**	67498	59264	**63825**	66358
	OHL input shaft	**(A)**	**951**	990	**(A)**	**1325**	1588	**(A)**	**763**	1400	**(A)**	**1990**	2290	**(A)**	**1980**	2510
	OHL output shaft **(B)**	6087	**7372**	7911	6087	**7372**	7911	6087	**7372**	7911	**(A)**	**7372**	7911	6087	**7372**	7911
	Output RPM	150	**76**	50	150	**76**	50	150	**76**	50	150	**76**	50	150	**76**	50
	Input Hp (max) **(C)**	52.26	**28.07**	18.90	89.62	**45.46**	30.13	139.09	**84.60**	56.56	148.64	**81.20**	55.93	146.07	**79.79**	54.98
23.04	Output torque, in-lb	21996	**23291**	23664	37719	**37719**	37719	58544	**70198**	70808	62563	**67379**	70013	61480	**66210**	68824
	OHL input shaft	**(A)**	**950**	990	**(A)**	**1235**	1545	**(A)**	**730**	1342	**(A)**	**1967**	2293	**(A)**	**1958**	2508
	OHL output shaft **(B)**	6751	**7372**	7911	6751	**7372**	7911	6751	**7372**	7911	6751	**7372**	7911	6751	**7372**	7911
	Output RPM	130	**66**	44	130	**66**	44	130	**66**	44	130	**66**	44	130	**66**	44
	Input Hp (max) **(C)**	49.31	**26.49**	17.84	87.62	**45.46**	30.14	123.93	**74.22**	49.20	133.93	**73.17**	49.20	131.59	**71.89**	49.20
26.49	Output torque, in-lb	23860	**25275**	25674	42400	**43373**	43373	59972	**70808**	70808	64810	**69804**	70808	63682	**68581**	70808
	OHL input shaft	**(A)**	**948**	987	**(A)**	**1029**	1479	**(A)**	**789**	1427	**(A)**	**1941**	2279	**(A)**	**1936**	2514
	OHL output shaft **(B)**	6751	**7372**	7911	6751	**7372**	7911	6751	**7372**	7911	6751	**7372**	7911	6751	**7372**	7911

Service factor: 1.0

(A) (B) (C) - See footnotes page on inside back cover

Blank areas (-) indicate configuration not available

ILH 148

Size: H_1482

Double reduction – Clamp collar, three-piece coupled, separate

NEMA motor frame		210TC			250TC			280TC			320TC			360TC		
IEC motor frame		132D			160D			180D/200D			225D			250D		
Separate group		132			160			180			225			250		
Ratio	Output Rating data	3450	1750	1160	3450	1750	1160	3450	1750	1160	3450	1750	1160	3450	1750	1160
30.28	Output RPM	114	**58**	38	114	**58**	38	114	**58**	38	114	**58**	38	114	**58**	38
	Input Hp (max) **(C)**	46.36	**24.91**	16.78	81.28	**45.02**	29.94	110.56	**64.93**	43.04	120.77	**64.93**	43.04	118.63	**64.81**	43.04
	Output torque, in-lb	25644	**27167**	27599	44959	**49095**	49258	61159	**70808**	70808	66804	**70808**	70808	65623	**70671**	70808
	OHL input shaft	**(A)**	**946**	985	**(A)**	**828**	1311	**(A)**	**860**	1496	**(A)**	**1969**	2287	**(A)**	**1917**	2542
	OHL output shaft **(B)**	6751	**7911**	9679	6751	**7911**	9679	6751	**7911**	9679	6751	**7911**	9679	6751	**7911**	9679
35.09	Output RPM	98	**50**	33	98	**50**	33	98	**50**	33	98	**50**	33	–	–	–
	Input Hp (max) **(C)**	43.09	**23.16**	15.59	72.65	**40.49**	27.88	97.32	**56.03**	37.14	107.37	**56.03**	37.14	–	–	–
	Output torque, in-lb	27619	**29262**	29730	46569	**51175**	53144	62387	**70805**	70805	68825	**70805**	70805	–	–	–
	OHL input shaft	**(A)**	**955**	994	**(A)**	**791**	1198	**(A)**	**929**	1565	**(A)**	**2041**	2282	–	–	–
	OHL output shaft **(B)**	7372	**7911**	9679	7372	**7911**	9679	7372	**7911**	9679	7372	**7911**	9679	–	–	–
38.23	Output RPM	90	**46**	30	90	**46**	30	90	**46**	30	90	**46**	30	–	–	–
	Input Hp (max) **(C)**	41.23	**22.17**	14.93	67.97	**37.82**	26.04	90.27	**51.43**	34.09	100.09	**51.43**	34.09	–	–	–
	Output torque, in-lb	28798	**30518**	31003	47468	**52078**	54082	63042	**70808**	70808	69899	**70808**	70808	–	–	–
	OHL input shaft	**(A)**	**955**	994	**(A)**	**780**	1188	**(A)**	**964**	1602	**(A)**	**2079**	2287	–	–	–
	OHL output shaft **(B)**	7372	**7911**	9679	7372	**7911**	9679	7372	**7911**	9679	7372	**7911**	9679	–	–	–
42.59	Output RPM	81	**41**	27	81	**41**	27	81	**41**	27	–	–	–	–	–	–
	Input Hp (max) **(C)**	39.02	**20.98**	14.13	63.54	**34.65**	23.85	81.98	**46.16**	30.60	–	–	–	–	–	–
	Output torque, in-lb	30360	**32174**	32688	49437	**53147**	55191	63782	**70808**	70808	–	–	–	–	–	–
	OHL input shaft	**(A)**	**955**	994	**(A)**	**768**	1175	**(A)**	**1006**	1641	–	–	–	–	–	–
	OHL output shaft **(B)**	7372	**7911**	9679	7372	**7911**	9679	7372	**7911**	9679	–	–	–	–	–	–
45.11	Output RPM	76	**39**	26	76	**39**	26	76	**39**	26	–	–	–	–	–	–
	Input Hp (max) **(C)**	38.07	**20.47**	13.78	60.60	**33.04**	22.75	77.87	**43.58**	28.89	–	–	–	–	–	–
	Output torque, in-lb	31376	**33251**	33783	49937	**53682**	55747	64170	**70808**	70808	–	–	–	–	–	–
	OHL input shaft	**(A)**	**954**	994	**(A)**	**760**	1169	**(A)**	**1025**	1663	–	–	–	–	–	–
	OHL output shaft **(B)**	7372	**9679**	9679	7372	**9679**	9679	7372	**9679**	9679	–	–	–	–	–	–

Service factor: 1.0

(A) (B) (C) - See footnotes page on inside back cover

Blank areas (-) indicate configuration not available

ILH 148

Size: H_1483

Triple reduction – Clamp collar, three-piece coupled, separate

NEMA motor frame		180TC			—			210TC			250TC			280TC			320TC		
IEC motor frame		100D			112D			132D			160D			180D/200D			225D		
Separate group		100			112			132			160			180			225		
Ratio	Output Rating data	3450	1750	1160	3450	1750	1160	3450	1750	1160	3450	1750	1160	3450	1750	1160	3450	1750	1160
	Output RPM	–	–	–	–	–	–	–	–	–	101	**51**	34	101	**51**	34	101	**51**	34
	Input Hp (max) **(C)**	–	–	–	–	–	–	–	–	–	89.37	**45.47**	30.14	89.37	**57.57**	38.16	89.37	**57.57**	38.16
34.15	Output torque, in-lb	–	–	–	–	–	–	–	–	–	55756	**55921**	55921	55756	**70808**	70808	55756	**70808**	70808
	OHL input shaft	–	–	–	–	–	–	–	–	–	**(A)**	**1523**	1586	**(A)**	**2001**	2357	**(A)**	**2185**	2278
	OHL output shaft **(B)**	–	–	–	–	–	–	–	–	–	6751	**7911**	9679	6751	**7911**	9679	6751	**7911**	9679
	Output RPM	–	–	–	–	–	–	–	–	–	76	**39**	26	76	**39**	26	76	**39**	26
	Input Hp (max) **(C)**	–	–	–	–	–	–	–	–	–	75.66	**43.27**	28.68	75.66	**43.27**	28.68	75.66	**43.27**	28.68
45.44	Output torque, in-lb	–	–	–	–	–	–	–	–	–	62804	**70808**	70808	62804	**70808**	70808	62804	**70808**	70808
	OHL input shaft	–	–	–	–	–	–	–	–	–	**(A)**	**1505**	1587	**(A)**	**2060**	2416	**(A)**	**2190**	2284
	OHL output shaft **(B)**	–	–	–	–	–	–	–	–	–	7372	**9679**	9679	7372	**9679**	9679	7372	**9679**	9679
	Output RPM	–	–	–	–	–	–	66	**33**	22	66	**33**	22	66	**33**	22	66	**33**	22
	Input Hp (max) **(C)**	–	–	–	–	–	–	61.07	**32.74**	21.70	68.27	**37.37**	24.77	68.27	**37.37**	24.77	68.27	**37.37**	24.77
52.61	Output torque, in-lb	–	–	–	–	–	–	58695	**62037**	62037	65615	**70808**	70808	65615	**70808**	70808	65615	**70808**	70808
	OHL input shaft	–	–	–	–	–	–	**(A)**	**949**	987	**(A)**	**1527**	1590	**(A)**	**2082**	2438	**(A)**	**2199**	2291
	OHL output shaft **(B)**	–	–	–	–	–	–	7372	**9679**	11827	7372	**9679**	11827	7372	**9679**	11827	7372	**9679**	11827
	Output RPM	–	–	–	–	–	–	56	**28**	19	56	**28**	19	56	**28**	19	–	–	–
	Input Hp (max) **(C)**	–	–	–	–	–	–	59.00	**31.65**	20.98	60.39	**31.65**	20.98	60.39	**31.65**	20.98	–	–	–
62.12	Output torque, in-lb	–	–	–	–	–	–	66951	**70808**	70808	68528	**70808**	70808	68528	**70808**	70808	–	–	–
	OHL input shaft	–	–	–	–	–	–	**(A)**	**946**	987	**(A)**	**1530**	1593	**(A)**	**2103**	2459	–	–	–
	OHL output shaft **(B)**	–	–	–	–	–	–	7911	**9679**	11827	7911	**9679**	11827	7911	**9679**	11827	–	–	–
	Output RPM	–	–	–	50	**25**	17	50	**25**	17	50	**25**	17	50	**25**	17	–	–	–
	Input Hp (max) **(C)**	–	–	–	27.34	**13.87**	9.19	55.74	**28.35**	18.79	55.74	**28.35**	18.79	55.74	**28.35**	18.79	–	–	–
69.36	Output torque, in-lb	–	–	–	34640	**34640**	34640	70623	**70808**	70808	70623	**70808**	70808	70623	**70808**	70808	–	–	–
	OHL input shaft	–	–	–	**(A)**	**835**	870	**(A)**	**951**	991	**(A)**	**1531**	1594	**(A)**	**2115**	2471	–	–	–
	OHL output shaft **(B)**	–	–	–	7911	**11827**	11827	7911	**11827**	11827	7911	**11827**	11827	7911	**11827**	11827	–	–	–
	Output RPM	43	**22**	14	43	**22**	14	43	**22**	14	43	**22**	14	43	**22**	14	–	–	–
	Input Hp (max) **(C)**	20.42	**10.36**	6.87	27.34	**13.87**	9.19	47.83	**24.26**	16.08	47.83	**24.26**	16.08	47.83	**24.26**	16.08	–	–	–
81.04	Output torque, in-lb	30229	**30229**	30229	40476	**40476**	40476	70808	**70808**	70808	70808	**70808**	70808	70808	**70808**	70808	–	–	–
	OHL input shaft	**(A)**	**713**	742	**(A)**	**843**	877	**(A)**	**954**	993	**(A)**	**1520**	1583	**(A)**	**2130**	2488	–	–	–
	OHL output shaft **(B)**	7911	**11827**	12725	7911	**11827**	12725	7911	**11827**	12725	7911	**11827**	12725	7911	**11827**	12725	–	–	–
	Output RPM	37	**19**	12	37	**19**	12	37	**19**	12	37	**19**	12	37	**19**	12	–	–	–
	Input Hp (max) **(C)**	20.42	**10.36**	6.87	27.34	**13.87**	9.19	41.72	**21.16**	14.03	41.72	**21.16**	14.03	41.72	**21.16**	14.03	–	–	–
92.91	Output torque, in-lb	34657	**34657**	34657	46405	**46405**	46405	70808	**70808**	70808	70808	**70808**	70808	70808	**70808**	70808	–	–	–
	OHL input shaft	**(A)**	**712**	741	**(A)**	**842**	877	**(A)**	**955**	995	**(A)**	**1525**	1581	**(A)**	**2142**	2497	–	–	–
	OHL output shaft **(B)**	9679	**11827**	12725	9679	**11827**	12725	9679	**11827**	12725	9679	**11827**	12725	9679	**11827**	12725	–	–	–
	Output RPM	–	–	–	32	**16**	11	32	**16**	11	32	**16**	11	–	–	–	–	–	–
	Input Hp (max) **(C)**	–	–	–	27.34	**13.87**	9.19	36.08	**18.30**	12.13	36.08	**18.30**	12.13	–	–	–	–	–	–
107.42	Output torque, in-lb	–	–	–	53652	**53652**	53652	70808	**70808**	70808	70808	**70808**	70808	–	–	–	–	–	–
	OHL input shaft	–	–	–	**(A)**	**840**	875	**(A)**	**956**	996	**(A)**	**1523**	1587	–	–	–	–	–	–
	OHL output shaft **(B)**	–	–	–	9679	**12725**	12725	9679	**12725**	12725	9679	**12725**	12725	–	–	–	–	–	–
	Output RPM	31	**16**	10	31	**16**	10	31	**16**	10	31	**16**	10	–	–	–	–	–	–
	Input Hp (max) **(C)**	20.42	**10.36**	6.87	27.34	**13.87**	9.19	34.76	**17.63**	11.69	34.76	**17.63**	11.69	–	–	–	–	–	–
111.50	Output torque, in-lb	41589	**41589**	41589	55686	**55686**	55686	70808	**70808**	70808	70808	**70808**	70808	–	–	–	–	–	–
	OHL input shaft	**(A)**	**708**	738	**(A)**	**839**	874	**(A)**	**957**	996	**(A)**	**1524**	1588	–	–	–	–	–	–
	OHL output shaft **(B)**	9679	**12725**	12725	9679	**12725**	12725	9679	**12725**	12725	9679	**12725**	12725	–	–	–	–	–	–
	Output RPM	28	**14**	9	28	**14**	9	28	**14**	9	28	**14**	9	–	–	–	–	–	–
	Input Hp (max) **(C)**	20.42	**10.36**	6.87	27.34	**13.87**	9.19	31.42	**15.94**	10.56	31.42	**15.94**	10.56	–	–	–	–	–	–
123.37	Output torque, in-lb	46019	**46019**	46019	61619	**61619**	61619	70808	**70808**	70808	70808	**70808**	70808	–	–	–	–	–	–
	OHL input shaft	**(A)**	**711**	735	**(A)**	**835**	871	**(A)**	**957**	996	**(A)**	**1527**	1591	–	–	–	–	–	–
	OHL output shaft **(B)**	9679	**12725**	12725	9679	**12725**	12725	9679	**12725**	12725	9679	**12725**	12725	–	–	–	–	–	–
	Output RPM	24	**12**	8	24	**12**	8	24	**12**	8	24	**12**	8	–	–	–	–	–	–
	Input Hp (max) **(C)**	20.42	**10.36**	6.87	26.84	**13.62**	9.03	26.84	**13.62**	9.03	26.84	**13.62**	9.03	–	–	–	–	–	–
144.39	Output torque, in-lb	53859	**53859**	53859	70808	**70808**	70808	70808	**70808**	70808	70808	**70808**	70808	–	–	–	–	–	–
	OHL input shaft	**(A)**	**712**	736	**(A)**	**837**	873	**(A)**	**950**	990	**(A)**	**1530**	1593	–	–	–	–	–	–
	OHL output shaft **(B)**	11827	**12725**	12725	11827	**12725**	12725	11827	**12725**	12725	11827	**12725**	12725	–	–	–	–	–	–

ILH 148

Size: H_1483

Triple reduction – Clamp collar, three-piece coupled, separate

NEMA motor frame		180TC			—			210TC			250TC			280TC			320TC		
IEC motor frame		100D			112D			132D			160D			180D/200D			225D		
Separate group		100			112			132			160			180			225		
Ratio	Output Rating data	3450	1750	1160	3450	1750	1160	3450	1750	1160	3450	1750	1160	3450	1750	1160	3450	1750	1160
	Output RPM	22	**11**	7	22	**11**	7	22	**11**	7	22	**11**	7	–	–	–	–	–	–
	Input Hp (max) **(C)**	20.42	**10.36**	6.87	24.79	**12.57**	8.33	24.79	**12.57**	8.33	24.79	**12.57**	8.33	–	–	–	–	–	–
156.38	Output torque, in-lb	58330	**58330**	58330	70808	**70808**	70808	70808	**70808**	70808	70808	**70808**	70808	–	–	–	–	–	–
	OHL input shaft	**(A)**	**711**	740	**(A)**	**839**	874	**(A)**	**952**	988	**(A)**	**1531**	1594	–	–	–	–	–	–
	OHL output shaft **(B)**	11827	**12725**	12725	11827	**12725**	12725	11827	**12725**	12725	11827	**12725**	12725	–	–	–	–	–	–
	Output RPM	20	**10**	7	20	**10**	7	20	**10**	7	–	–	–	–	–	–	–	–	–
	Input Hp (max) **(C)**	19.33	**10.36**	6.87	22.21	**11.27**	7.47	22.21	**11.27**	7.47	–	–	–	–	–	–	–	–	–
174.53	Output torque, in-lb	61633	**65099**	65099	70808	**70808**	70808	70808	**70808**	70808	–	–	–	–	–	–	–	–	–
	OHL input shaft	**(A)**	**556**	737	**(A)**	**836**	871	**(A)**	**951**	990	–	–	–	–	–	–	–	–	–
	OHL output shaft **(B)**	11827	**12725**	12725	11827	**12725**	12725	11827	**12725**	12725	–	–	–	–	–	–	–	–	–
	Output RPM	19	**9**	6	19	**9**	6	19	**9**	6	–	–	–	–	–	–	–	–	–
	Input Hp (max) **(C)**	18.43	**10.03**	6.87	20.95	**10.63**	7.04	20.95	**10.63**	7.04	–	–	–	–	–	–	–	–	–
185.03	Output torque, in-lb	62310	**66852**	69018	70808	**70808**	70808	70808	**70808**	70808	–	–	–	–	–	–	–	–	–
	OHL input shaft	**(A)**	**522**	740	**(A)**	**837**	873	**(A)**	**952**	991	–	–	–	–	–	–	–	–	–
	OHL output shaft **(B)**	11827	**12725**	12725	11827	**12725**	12725	11827	**12725**	12725	–	–	–	–	–	–	–	–	–
	Output RPM	16	**8**	6	16	**8**	6	16	**8**	6	–	–	–	–	–	–	–	–	–
	Input Hp (max) **(C)**	16.61	**9.04**	6.21	18.48	**9.37**	6.21	18.48	**9.37**	6.21	–	–	–	–	–	–	–	–	–
209.76	Output torque, in-lb	63661	**68285**	70808	70808	**70808**	70808	70808	**70808**	70808	–	–	–	–	–	–	–	–	–
	OHL input shaft	**(A)**	**514**	735	**(A)**	**840**	875	**(A)**	**954**	994	–	–	–	–	–	–	–	–	–
	OHL output shaft **(B)**	12725	**12725**	12725	12725	**12725**	12725	12725	**12725**	12725	–	–	–	–	–	–	–	–	–
	Output RPM	15	**8**	5	15	**8**	5	15	**8**	5	–	–	–	–	–	–	–	–	–
	Input Hp (max) **(C)**	15.69	**8.54**	5.81	17.27	**8.76**	5.81	17.27	**8.76**	5.81	–	–	–	–	–	–	–	–	–
224.43	Output torque, in-lb	64347	**69006**	70808	70808	**70808**	70808	70808	**70808**	70808	–	–	–	–	–	–	–	–	–
	OHL input shaft	**(A)**	**509**	737	**(A)**	**841**	876	**(A)**	**955**	994	–	–	–	–	–	–	–	–	–
	OHL output shaft **(B)**	12725	**12725**	12725	12725	**12725**	12725	12725	**12725**	12725	–	–	–	–	–	–	–	–	–
	Output RPM	15	**7**	5	15	**7**	5	15	**7**	5	–	–	–	–	–	–	–	–	–
	Input Hp (max) **(C)**	15.03	**8.18**	5.52	16.42	**8.33**	5.52	16.42	**8.33**	5.52	–	–	–	–	–	–	–	–	–
236.05	Output torque, in-lb	64825	**69568**	70808	70808	**70808**	70808	70808	**70808**	70808	–	–	–	–	–	–	–	–	–
	OHL input shaft	**(A)**	**507**	738	**(A)**	**841**	876	**(A)**	**955**	995	–	–	–	–	–	–	–	–	–
	OHL output shaft **(B)**	12725	**12725**	12725	12725	**12725**	12725	12725	**12725**	12725	–	–	–	–	–	–	–	–	–
	Output RPM	14	**7**	5	14	**7**	5	14	**7**	5	–	–	–	–	–	–	–	–	–
	Input Hp (max) **(C)**	14.08	**7.66**	5.12	15.22	**7.72**	5.12	15.22	**7.72**	5.12	–	–	–	–	–	–	–	–	–
254.70	Output torque, in-lb	65521	**70276**	70808	70808	**70808**	70808	70808	**70808**	70808	–	–	–	–	–	–	–	–	–
	OHL input shaft	**(A)**	**503**	739	**(A)**	**842**	877	**(A)**	**956**	995	–	–	–	–	–	–	–	–	–
	OHL output shaft **(B)**	12725	**12725**	12725	12725	**12725**	12725	12725	**12725**	12725	–	–	–	–	–	–	–	–	–
	Output RPM	12	**6**	4	12	**6**	4	12	**6**	4	–	–	–	–	–	–	–	–	–
	Input Hp (max) **(C)**	13.12	**7.12**	4.72	14.03	**7.12**	4.72	14.03	**7.12**	4.72	–	–	–	–	–	–	–	–	–
276.23	Output torque, in-lb	66219	**70808**	70808	70808	**70808**	70808	70808	**70808**	70808	–	–	–	–	–	–	–	–	–
	OHL input shaft	**(A)**	**504**	740	**(A)**	**843**	878	**(A)**	**957**	996	–	–	–	–	–	–	–	–	–
	OHL output shaft **(B)**	12725	**12725**	12725	12725	**12725**	12725	12725	**12725**	12725	–	–	–	–	–	–	–	–	–
	Output RPM	11	**6**	4	11	**6**	4	11	**6**	4	–	–	–	–	–	–	–	–	–
	Input Hp (max) **(C)**	12.16	**6.52**	4.32	12.86	**6.52**	4.32	12.86	**6.52**	4.32	–	–	–	–	–	–	–	–	–
301.34	Output torque, in-lb	66923	**70808**	70808	70808	**70808**	70808	70808	**70808**	70808	–	–	–	–	–	–	–	–	–
	OHL input shaft	**(A)**	**518**	741	**(A)**	**843**	878	**(A)**	**957**	996	–	–	–	–	–	–	–	–	–
	OHL output shaft **(B)**	12725	**12725**	12725	12725	**12725**	12725	12725	**12725**	12725	–	–	–	–	–	–	–	–	–
	Output RPM	10	**5**	3	10	**5**	3	–	–	–	–	–	–	–	–	–	–	–	–
	Input Hp (max) **(C)**	11.03	**5.85**	3.88	11.53	**5.85**	3.88	–	–	–	–	–	–	–	–	–	–	–	–
336.11	Output torque, in-lb	67736	**70808**	70808	70808	**70808**	70808	–	–	–	–	–	–	–	–	–	–	–	–
	OHL input shaft	**(A)**	**535**	742	**(A)**	**844**	878	–	–	–	–	–	–	–	–	–	–	–	–
	OHL output shaft **(B)**	12725	**12725**	12725	12725	**12725**	12725	–	–	–	–	–	–	–	–	–	–	–	–

Service factor: 1.0

(A) (B) (C) - See footnotes page on inside back cover

Blank areas (-) indicate configuration not available

ILH 148

Size: H_1484

Four-stage reduction – Clamp collar, three-piece coupled, separate

NEMA motor frame		56C			—			140TC			180TC			—			210TC		
IEC motor frame		71D			80D			90D			100D			112D			132D		
Separate group		71			80			90			100			112			132		
Ratio	Output Rating data	3450	1750	1160	3450	1750	1160	3450	1750	1160	3450	1750	1160	3450	1750	1160	3450	1750	1160
	Output RPM	10.04	**5.09**	3.38	10.04	**5.09**	3.38	10.04	**5.09**	3.38	10.04	**5.09**	3.38	10.04	**5.09**	3.38	10.04	**5.09**	3.38
	Input Hp (max) **(C)**	3.98	**2.02**	1.34	4.85	**2.46**	1.63	8.32	**4.22**	3.79	11.28	**5.72**	3.83	11.28	**5.72**	3.83	11.28	**5.72**	3.83
343.61	Output torque, in-lb	24983	**24997**	25016	30444	**30442**	30430	52225	**52222**	52273	70808	**70808**	70808	70808	**70808**	70808	70808	**70808**	70808
	OHL input shaft	(A)	(A)	(A)	(A)	(A)	(A)	(A)	(A)	(A)	(A)	(A)	(A)	(A)	(A)	(A)	(A)	(A)	(A)
	OHL output shaft **(B)**	7911	**11827**	12725	7911	**11827**	12725	7911	**11827**	12725	7911	**12725**	12725	7911	**12725**	12725	7911	**12725**	12725
	Output RPM	9.05	**4.59**	3.04	9.05	**4.59**	3.04	9.05	**4.59**	3.04	9.05	**4.59**	3.04	9.05	**4.59**	3.04	9.05	**4.59**	3.04
	Input Hp (max) **(C)**	3.98	**2.02**	1.34	4.85	**2.46**	1.63	9.58	**4.86**	3.42	10.17	**5.16**	3.45	10.17	**5.16**	3.45	10.17	**5.16**	3.45
381.21	Output torque, in-lb	27717	**27733**	27754	33776	**33774**	33761	66716	**66724**	66693	70808	**70808**	70808	70808	**70808**	70808	70808	**70808**	70808
	OHL input shaft	(A)	(A)	(A)	(A)	(A)	(A)	(A)	(A)	(A)	(A)	(A)	(A)	(A)	(A)	(A)	(A)	(A)	(A)
	OHL output shaft **(B)**	9679	**12725**	12725	9679	**12725**	12725	9679	**12725**	12725	9679	**12725**	12725	9679	**12725**	12725	9679	**12725**	12725
	Output RPM	8.11	**4.11**	2.73	8.11	**4.11**	2.73	8.11	**4.11**	2.73	8.11	**4.11**	2.73	8.11	**4.11**	2.73	8.11	**4.11**	2.73
	Input Hp (max) **(C)**	3.98	**2.02**	1.34	4.85	**2.46**	1.63	9.11	**4.62**	3.06	9.11	**4.62**	3.06	9.11	**4.62**	3.06	9.11	**4.62**	3.06
425.63	Output torque, in-lb	30946	**30964**	30988	37711	**37708**	37694	70808	**70808**	70808	70808	**70808**	70808	70808	**70808**	70808	70808	**70808**	70808
	OHL input shaft	(A)	(A)	(A)	(A)	(A)	(A)	(A)	(A)	(A)	(A)	(A)	(A)	(A)	(A)	(A)	(A)	(A)	(A)
	OHL output shaft **(B)**	9679	**12725**	12725	9679	**12725**	12725	9679	**12725**	12725	9679	**12725**	12725	9679	**12725**	12725	9679	**12725**	12725
	Output RPM	7.73	**3.92**	2.60	7.73	**3.92**	2.60	7.73	**3.92**	2.60	7.73	**3.92**	2.60	7.73	**3.92**	2.60	7.73	**3.92**	2.60
	Input Hp (max) **(C)**	3.98	**2.02**	1.34	4.85	**2.46**	1.63	8.69	**4.41**	2.92	8.69	**4.41**	2.92	8.69	**4.41**	2.92	8.69	**4.41**	2.92
446.17	Output torque, in-lb	32439	**32458**	32483	39530	**39528**	39513	70808	**70808**	70808	70808	**70808**	70808	70808	**70808**	70808	70808	**70808**	70808
	OHL input shaft	(A)	(A)	(A)	(A)	(A)	(A)	(A)	(A)	(A)	(A)	(A)	(A)	(A)	(A)	(A)	(A)	(A)	(A)
	OHL output shaft **(B)**	11827	**12725**	12725	11827	**12725**	12725	11827	**12725**	12725	11827	**12725**	12725	11827	**12725**	12725	11827	**12725**	12725
	Output RPM	7.14	**3.62**	2.40	7.14	**3.62**	2.40	7.14	**3.62**	2.40	7.14	**3.62**	2.40	7.14	**3.62**	2.40	7.14	**3.62**	2.40
	Input Hp (max) **(C)**	3.98	**2.02**	1.34	4.85	**2.46**	1.63	8.02	**4.07**	2.70	8.02	**4.07**	2.70	8.02	**4.07**	2.70	8.02	**4.07**	2.70
483.21	Output torque, in-lb	35133	**35153**	35180	42813	**42810**	42794	70808	**70808**	70808	70808	**70808**	70808	70808	**70808**	70808	70808	**70808**	70808
	OHL input shaft	(A)	(A)	(A)	(A)	(A)	(A)	(A)	(A)	(A)	(A)	(A)	(A)	(A)	(A)	(A)	(A)	(A)	(A)
	OHL output shaft **(B)**	11827	**12725**	12725	11827	**12725**	12725	11827	**12725**	12725	11827	**12725**	12725	11827	**12725**	12725	11827	**12725**	12725
	Output RPM	6.60	**3.35**	2.22	6.60	**3.35**	2.22	6.60	**3.35**	2.22	6.60	**3.35**	2.22	6.60	**3.35**	2.22	6.60	**3.35**	2.22
	Input Hp (max) **(C)**	3.98	**2.02**	1.34	4.85	**2.46**	1.63	7.41	**3.76**	2.49	7.41	**3.76**	2.49	7.41	**3.76**	2.49	7.41	**3.76**	2.49
523.09	Output torque, in-lb	38032	**38054**	38083	46346	**46343**	46325	70808	**70808**	70808	70808	**70808**	70808	70808	**70808**	70808	70808	**70808**	70808
	OHL input shaft	(A)	(A)	(A)	(A)	(A)	(A)	(A)	(A)	(A)	(A)	(A)	(A)	(A)	(A)	(A)	(A)	(A)	(A)
	OHL output shaft **(B)**	9679	**12725**	12725	9679	**12725**	12725	9679	**12725**	12725	9679	**12725**	12725	9679	**12725**	12725	9679	**12725**	12725
	Output RPM	6.13	**3.11**	2.06	6.13	**3.11**	2.06	6.13	**3.11**	2.06	6.13	**3.11**	2.06	6.13	**3.11**	2.06	6.13	**3.11**	2.06
	Input Hp (max) **(C)**	3.98	**2.02**	1.34	4.85	**2.46**	1.63	6.89	**3.49**	2.32	6.89	**3.49**	2.32	6.89	**3.49**	2.32	6.89	**3.49**	2.32
562.57	Output torque, in-lb	40903	**40926**	40958	49844	**49841**	49822	70808	**70808**	70808	70808	**70808**	70808	70808	**70808**	70808	70808	**70808**	70808
	OHL input shaft	(A)	(A)	(A)	(A)	(A)	(A)	(A)	(A)	(A)	(A)	(A)	(A)	(A)	(A)	(A)	(A)	(A)	(A)
	OHL output shaft **(B)**	9679	**12725**	12725	9679	**12725**	12725	9679	**12725**	12725	9679	**12725**	12725	9679	**12725**	12725	9679	**12725**	12725
	Output RPM	5.67	**2.88**	1.91	5.67	**2.88**	1.91	5.67	**2.88**	1.91	5.67	**2.88**	1.91	5.67	**2.88**	1.91	5.67	**2.88**	1.91
	Input Hp (max) **(C)**	3.98	**2.02**	1.34	4.85	**2.46**	1.63	6.37	**3.23**	2.14	6.37	**3.23**	2.14	6.37	**3.23**	2.14	6.37	**3.23**	2.14
608.21	Output torque, in-lb	44221	**44247**	44281	53888	**53885**	53864	70808	**70808**	70808	70808	**70808**	70808	70808	**70808**	70808	70808	**70808**	70808
	OHL input shaft	(A)	(A)	(A)	(A)	(A)	(A)	(A)	(A)	(A)	(A)	(A)	(A)	(A)	(A)	(A)	(A)	(A)	(A)
	OHL output shaft **(B)**	9679	**12725**	12725	9679	**12725**	12725	9679	**12725**	12725	9679	**12725**	12725	9679	**12725**	12725	9679	**12725**	12725
	Output RPM	5.40	**2.74**	1.82	5.40	**2.74**	1.82	5.40	**2.74**	1.82	5.40	**2.74**	1.82	5.40	**2.74**	1.82	5.40	**2.74**	1.82
	Input Hp (max) **(C)**	3.98	**2.02**	1.34	4.85	**2.46**	1.63	6.07	**3.08**	2.04	6.07	**3.08**	2.04	6.07	**3.08**	2.04	6.07	**3.08**	2.04
638.35	Output torque, in-lb	46413	**46439**	46475	56558	**56555**	56533	70808	**70808**	70808	70808	**70808**	70808	70808	**70808**	70808	70808	**70808**	70808
	OHL input shaft	(A)	(A)	(A)	(A)	(A)	(A)	(A)	(A)	(A)	(A)	(A)	(A)	(A)	(A)	(A)	(A)	(A)	(A)
	OHL output shaft **(B)**	11827	**12725**	12725	11827	**12725**	12725	11827	**12725**	12725	11827	**12725**	12725	11827	**12725**	12725	11827	**12725**	12725
	Output RPM	4.97	**2.52**	1.67	4.97	**2.52**	1.67	4.97	**2.52**	1.67	4.97	**2.52**	1.67	4.97	**2.52**	1.67	4.97	**2.52**	1.67
	Input Hp (max) **(C)**	3.98	**2.02**	1.34	4.85	**2.46**	1.63	5.59	**2.84**	1.88	5.59	**2.84**	1.88	5.59	**2.84**	1.88	5.59	**2.84**	1.88
693.49	Output torque, in-lb	50422	**50451**	50489	61443	**61440**	61416	70808	**70808**	70808	70808	**70808**	70808	70808	**70808**	70808	70808	**70808**	70808
	OHL input shaft	(A)	(A)	(A)	(A)	(A)	(A)	(A)	(A)	(A)	(A)	(A)	(A)	(A)	(A)	(A)	(A)	(A)	(A)
	OHL output shaft **(B)**	12725	**12725**	12725	12725	**12725**	12725	12725	**12725**	12725	12725	**12725**	12725	12725	**12725**	12725	12725	**12725**	12725
	Output RPM	4.72	**2.40**	1.59	4.72	**2.40**	1.59	4.72	**2.40**	1.59	4.72	**2.40**	1.59	4.72	**2.40**	1.59	4.72	**2.40**	1.59
	Input Hp (max) **(C)**	3.80	**1.93**	1.28	4.85	**2.46**	1.63	5.31	**2.69**	1.78	5.31	**2.69**	1.78	5.31	**2.69**	1.78	5.31	**2.69**	1.78
730.35	Output torque, in-lb	50700	**50765**	50792	64709	**64705**	64681	70808	**70808**	70808	70808	**70808**	70808	70808	**70808**	70808	70808	**70808**	70808
	OHL input shaft	(A)	(A)	(A)	(A)	(A)	(A)	(A)	(A)	(A)	(A)	(A)	(A)	(A)	(A)	(A)	(A)	(A)	(A)
	OHL output shaft **(B)**	9679	**12725**	12725	9679	**12725**	12725	9679	**12725**	12725	9679	**12725**	12725	9679	**12725**	12725	9679	**12725**	12725

Service factor: 1.0

(A) (B) (C) - See footnotes page on inside back cover

Blank areas (-) indicate configuration not available

ILH 148

Size: H_1484

Four-stage reduction – Clamp collar, three-piece coupled, separate

NEMA motor frame		56C			—			140TC			180TC			—			210TC		
IEC motor frame		71D			80D			90D			100D			112D			132D		
Separate group		71			80			90			100			112			132		
Ratio	**Output Rating data**	**3450**	**1750**	**1160**	**3450**	**1750**	**1160**	**3450**	**1750**	**1160**	**3450**	**1750**	**1160**	**3450**	**1750**	**1160**	**3450**	**1750**	**1160**
	Output RPM	4.12	**2.09**	1.38	4.12	**2.09**	1.38	4.12	**2.09**	1.38	4.12	**2.09**	1.38	4.12	**2.09**	1.38	4.12	**2.09**	1.38
	Input Hp (max) **(C)**	3.98	**2.02**	1.34	4.62	**2.35**	1.55	4.62	**2.35**	1.55	4.62	**2.35**	1.55	4.62	**2.35**	1.55	4.62	**2.35**	1.55
838.20	Output torque, in-lb	60943	**60978**	61025	70808	**70808**	70808	70808	**70808**	70808	70808	**70808**	70808	70808	**70808**	70808	70808	**70808**	70808
	OHL input shaft	(A)	(A)	(A)	(A)	(A)	(A)	(A)	(A)	(A)	(A)	(A)	(A)	(A)	(A)	(A)	(A)	(A)	(A)
	OHL output shaft **(B)**	11827	**12725**	12725	11827	**12725**	12725	11827	**12725**	12725	11827	**12725**	12725	11827	**12725**	12725	11827	**12725**	12725
	Output RPM	3.88	**1.97**	1.30	3.88	**1.97**	1.30	3.88	**1.97**	1.30	3.88	**1.97**	1.30	3.88	**1.97**	1.30	3.88	**1.97**	1.30
	Input Hp (max) **(C)**	3.98	**2.02**	1.34	4.36	**2.21**	1.47	4.36	**2.21**	1.47	4.36	**2.21**	1.47	4.36	**2.21**	1.47	4.36	**2.21**	1.47
889.38	Output torque, in-lb	64664	**64702**	64751	70808	**70808**	70808	70808	**70808**	70808	70808	**70808**	70808	70808	**70808**	70808	70808	**70808**	70808
	OHL input shaft	(A)	(A)	(A)	(A)	(A)	(A)	(A)	(A)	(A)	(A)	(A)	(A)	(A)	(A)	(A)	(A)	(A)	(A)
	OHL output shaft **(B)**	12725	**12725**	12725	12725	**12725**	12725	12725	**12725**	12725	12725	**12725**	12725	12725	**12725**	12725	12725	**12725**	12725
	Output RPM	3.63	**1.84**	1.22	3.63	**1.84**	1.22	3.63	**1.84**	1.22	3.63	**1.84**	1.22	3.63	**1.84**	1.22	3.63	**1.84**	1.22
	Input Hp (max) **(C)**	3.98	**2.02**	1.34	4.07	**2.07**	1.37	4.07	**2.07**	1.37	4.07	**2.07**	1.37	4.07	**2.07**	1.37	4.07	**2.07**	1.37
951.58	Output torque, in-lb	69187	**69227**	69280	70808	**70808**	70808	70808	**70808**	70808	70808	**70808**	70808	70808	**70808**	70808	70808	**70808**	70808
	OHL input shaft	(A)	(A)	(A)	(A)	(A)	(A)	(A)	(A)	(A)	(A)	(A)	(A)	(A)	(A)	(A)	(A)	(A)	(A)
	OHL output shaft **(B)**	12725	**12725**	12725	12725	**12725**	12725	12725	**12725**	12725	12725	**12725**	12725	12725	**12725**	12725	12725	**12725**	12725
	Output RPM	3.32	**1.68**	1.12	3.32	**1.68**	1.12	3.32	**1.68**	1.12	3.32	**1.68**	1.12	3.32	**1.68**	1.12	3.32	**1.68**	1.12
	Input Hp (max) **(C)**	3.73	**1.89**	1.25	3.73	**1.89**	1.25	3.73	**1.89**	1.25	3.73	**1.89**	1.25	3.73	**1.89**	1.25	3.73	**1.89**	1.25
1039.62	Output torque, in-lb	70808	**70808**	70808	70808	**70808**	70808	70808	**70808**	70808	70808	**70808**	70808	70808	**70808**	70808	70808	**70808**	70808
	OHL input shaft	(A)	(A)	(A)	(A)	(A)	(A)	(A)	(A)	(A)	(A)	(A)	(A)	(A)	(A)	(A)	(A)	(A)	(A)
	OHL output shaft **(B)**	12725	**12725**	12725	12725	**12725**	12725	12725	**12725**	12725	12725	**12725**	12725	12725	**12725**	12725	12725	**12725**	12725
	Output RPM	3.15	**1.60**	1.06	3.15	**1.60**	1.06	3.15	**1.60**	1.06	3.15	**1.60**	1.06	3.15	**1.60**	1.06	3.15	**1.60**	1.06
	Input Hp (max) **(C)**	3.54	**1.79**	1.19	3.54	**1.79**	1.19	3.54	**1.79**	1.19	3.54	**1.79**	1.19	3.54	**1.79**	1.19	3.54	**1.79**	1.19
1095.38	Output torque, in-lb	70808	**70808**	70808	70808	**70808**	70808	70808	**70808**	70808	70808	**70808**	70808	70808	**70808**	70808	70808	**70808**	70808
	OHL input shaft	(A)	(A)	(A)	(A)	(A)	(A)	(A)	(A)	(A)	(A)	(A)	(A)	(A)	(A)	(A)	(A)	(A)	(A)
	OHL output shaft **(B)**	11827	**12725**	12725	11827	**12725**	12725	11827	**12725**	12725	11827	**12725**	12725	11827	**12725**	12725	11827	**12725**	12725
	Output RPM	3.12	**1.58**	1.05	3.12	**1.58**	1.05	3.12	**1.58**	1.05	3.12	**1.58**	1.05	3.12	**1.58**	1.05	3.12	**1.58**	1.05
	Input Hp (max) **(C)**	3.50	**1.78**	1.18	3.50	**1.78**	1.18	3.50	**1.78**	1.18	3.50	**1.78**	1.18	3.50	**1.78**	1.18	3.50	**1.78**	1.18
1106.44	Output torque, in-lb	70808	**70808**	70808	70808	**70808**	70808	70808	**70808**	70808	70808	**70808**	70808	70808	**70808**	70808	70808	**70808**	70808
	OHL input shaft	(A)	(A)	(A)	(A)	(A)	(A)	(A)	(A)	(A)	(A)	(A)	(A)	(A)	(A)	(A)	(A)	(A)	(A)
	OHL output shaft **(B)**	12725	**12725**	12725	12725	**12725**	12725	12725	**12725**	12725	12725	**12725**	12725	12725	**12725**	12725	12725	**12725**	12725
	Output RPM	2.87	**1.45**	0.96	2.87	**1.45**	0.96	2.87	**1.45**	0.96	2.87	**1.45**	0.96	2.87	**1.45**	0.96	2.87	**1.45**	0.96
	Input Hp (max) **(C)**	3.22	**1.63**	1.08	3.22	**1.63**	1.08	3.22	**1.63**	1.08	3.22	**1.63**	1.08	3.22	**1.63**	1.08	3.22	**1.63**	1.08
1202.94	Output torque, in-lb	70808	**70808**	70808	70808	**70808**	70808	70808	**70808**	70808	70808	**70808**	70808	70808	**70808**	70808	70808	**70808**	70808
	OHL input shaft	(A)	(A)	(A)	(A)	(A)	(A)	(A)	(A)	(A)	(A)	(A)	(A)	(A)	(A)	(A)	(A)	(A)	(A)
	OHL output shaft **(B)**	12725	**12725**	12725	12725	**12725**	12725	12725	**12725**	12725	12725	**12725**	12725	12725	**12725**	12725	12725	**12725**	12725
	Output RPM	2.75	**1.39**	0.92	2.75	**1.39**	0.92	2.75	**1.39**	0.92	2.75	**1.39**	0.92	2.75	**1.39**	0.92	2.75	**1.39**	0.92
	Input Hp (max) **(C)**	3.09	**1.57**	1.04	3.09	**1.57**	1.04	3.09	**1.57**	1.04	3.09	**1.57**	1.04	3.09	**1.57**	1.04	3.09	**1.57**	1.04
1255.67	Output torque, in-lb	70808	**70808**	70808	70808	**70808**	70808	70808	**70808**	70808	70808	**70808**	70808	70808	**70808**	70808	70808	**70808**	70808
	OHL input shaft	(A)	(A)	(A)	(A)	(A)	(A)	(A)	(A)	(A)	(A)	(A)	(A)	(A)	(A)	(A)	(A)	(A)	(A)
	OHL output shaft **(B)**	12725	**12725**	12725	12725	**12725**	12725	12725	**12725**	12725	12725	**12725**	12725	12725	**12725**	12725	12725	**12725**	12725
	Output RPM	2.47	**1.25**	0.83	2.47	**1.25**	0.83	2.47	**1.25**	0.83	2.47	**1.25**	0.83	2.47	**1.25**	0.83	2.47	**1.25**	0.83
	Input Hp (max) **(C)**	2.77	**1.41**	0.93	2.77	**1.41**	0.93	2.77	**1.41**	0.93	2.77	**1.41**	0.93	2.77	**1.41**	0.93	2.77	**1.41**	0.93
1397.42	Output torque, in-lb	70808	**70808**	70808	70808	**70808**	70808	70808	**70808**	70808	70808	**70808**	70808	70808	**70808**	70808	70808	**70808**	70808
	OHL input shaft	(A)	(A)	(A)	(A)	(A)	(A)	(A)	(A)	(A)	(A)	(A)	(A)	(A)	(A)	(A)	(A)	(A)	(A)
	OHL output shaft **(B)**	12725	**12725**	12725	12725	**12725**	12725	12725	**12725**	12725	12725	**12725**	12725	12725	**12725**	12725	12725	**12725**	12725
	Output RPM	2.19	**1.11**	0.74	2.19	**1.11**	0.74	2.19	**1.11**	0.74	–	–	–	–	–	–	–	–	–
	Input Hp (max) **(C)**	2.46	**1.25**	0.83	2.46	**1.25**	0.83	2.46	**1.25**	0.83	–	–	–	–	–	–	–	–	–
1576.31	Output torque, in-lb	70808	**70808**	70808	70808	**70808**	70808	70808	**70808**	70808	–	–	–	–	–	–	–	–	–
	OHL input shaft	(A)	(A)	(A)	(A)	**(A)**	**(A)**	**(A)**	**(A)**	**(A)**	–	–	–	–	–	–	–	–	–
	OHL output shaft **(B)**	11827	**12725**	12725	11827	**12725**	12725	11827	**12725**	12725	–	–	–	–	–	–	–	–	–
	Output RPM	2.14	**1.08**	0.72	2.14	**1.08**	0.72	2.14	**1.08**	0.72	2.14	**1.08**	0.72	2.14	**1.08**	0.72	2.14	**1.08**	0.72
	Input Hp (max) **(C)**	2.40	**1.22**	0.81	2.40	**1.22**	0.81	2.40	**1.22**	0.81	2.40	**1.22**	0.81	2.40	**1.22**	0.81	2.40	**1.22**	0.81
1615.18	Output torque, in-lb	70808	**70808**	70808	70808	**70808**	70808	70808	**70808**	70808	70808	**70808**	70808	70808	**70808**	70808	70808	**70808**	70808
	OHL input shaft	(A)	(A)	(A)	(A)	(A)	(A)	(A)	(A)	(A)	(A)	(A)	(A)	(A)	(A)	(A)	(A)	(A)	(A)
	OHL output shaft **(B)**	12725	**12725**	12725	12725	**12725**	12725	12725	**12725**	12725	12725	**12725**	12725	12725	**12725**	12725	12725	**12725**	12725

Service factor: 1.0

(A) (B) (C) - See footnotes page on inside back cover

Blank areas (-) indicate configuration not available

ILH 148

Size: H_1484

Four-stage reduction – Clamp collar, three-piece coupled, separate

NEMA motor frame		56C			—			140TC			180TC			—			210TC		
IEC motor frame		71D			80D			90D			100D			112D			132D		
Separate group		71			80			90			100			112			132		
Ratio	Output Rating data	3450	1750	1160	3450	1750	1160	3450	1750	1160	3450	1750	1160	3450	1750	1160	3450	1750	1160
	Output RPM	1.87	**0.95**	0.63	1.87	**0.95**	0.63	1.87	**0.95**	0.63	1.87	**0.95**	0.63	1.87	**0.95**	0.63	–	–	–
	Input Hp (max) **(C)**	2.10	**1.07**	0.71	2.10	**1.07**	0.71	2.10	**1.07**	0.71	2.10	**1.07**	0.71	2.10	**1.07**	0.71	–	–	–
1841.48	Output torque, in-lb	70808	**70808**	70808	70808	**70808**	70808	70808	**70808**	70808	70808	**70808**	70808	70808	**70808**	70808	–	–	–
	OHL input shaft	(A)	(A)	(A)	(A)	**(A)**	**(A)**	**(A)**	**(A)**	**(A)**	**(A)**	**(A)**	**(A)**	**(A)**	**(A)**	**(A)**	–	–	–
	OHL output shaft **(B)**	12725	**12725**	12725	12725	**12725**	12725	12725	**12725**	12725	12725	**12725**	12725	12725	**12725**	12725	–	–	–
	Output RPM	1.85	**0.94**	0.62	1.85	**0.94**	0.62	1.85	**0.94**	0.62	1.85	**0.94**	0.62	1.85	**0.94**	0.62	–	–	–
	Input Hp (max) **(C)**	2.07	**1.05**	0.70	2.07	**1.05**	0.70	2.07	**1.05**	0.70	2.07	**1.05**	0.70	2.07	**1.05**	0.70	–	–	–
1869.52	Output torque, in-lb	70808	**70808**	70808	70808	**70808**	70808	70808	**70808**	70808	70808	**70808**	70808	70808	**70808**	70808	–	–	–
	OHL input shaft	(A)	(A)	(A)	**(A)**	**(A)**	**(A)**	**(A)**	**(A)**	**(A)**	**(A)**	**(A)**	**(A)**	**(A)**	**(A)**	**(A)**	–	–	–
	OHL output shaft **(B)**	12725	**12725**	12725	12725	**12725**	12725	12725	**12725**	12725	12725	**12725**	12725	12725	**12725**	12725	–	–	–
	Output RPM	1.66	**0.84**	0.56	1.66	**0.84**	0.56	1.66	**0.84**	0.56	1.66	**0.84**	0.56	–	–	–	–	–	–
	Input Hp (max) **(C)**	1.86	**0.94**	0.63	1.86	**0.94**	0.63	1.86	**0.94**	0.63	1.86	**0.94**	0.63	–	–	–	–	–	–
2081.96	Output torque, in-lb	70808	**70808**	70808	70808	**70808**	70808	70808	**70808**	70808	70808	**70808**	70808	-	–	–	–	–	–
	OHL input shaft	**(A)**	**(A)**	**(A)**	**(A)**	**(A)**	**(A)**	**(A)**	**(A)**	**(A)**	**(A)**	**(A)**	**(A)**	–	–	–	–	–	–
	OHL output shaft **(B)**	12725	**12725**	12725	12725	**12725**	12725	12725	**12725**	12725	12725	**12725**	12725	–	–	–	–	–	–
	Output RPM	1.54	**0.78**	0.52	1.54	**0.78**	0.52	1.54	**0.78**	0.52	1.54	**0.78**	0.52	–	–	–	–	–	–
	Input Hp (max) **(C)**	1.73	**0.88**	0.58	1.73	**0.88**	0.58	1.73	**0.88**	0.58	1.73	**0.88**	0.58	–	–	–	–	–	–
2246.45	Output torque, in-lb	70808	**70808**	70808	70808	**70808**	70808	70808	**70808**	70808	70808	**70808**	70808	-	–	–	–	–	–
	OHL input shaft	(A)	(A)	(A)	(A)	(A)	(A)	**(A)**	**(A)**	**(A)**	**(A)**	**(A)**	**(A)**	–	–	–	–	–	–
	OHL output shaft **(B)**	12725	**12725**	12725	12725	**12725**	12725	12725	**12725**	12725	12725	**12725**	12725	–	–	–	–	–	–
	Output RPM	1.42	**0.72**	0.48	1.42	**0.72**	0.48	1.42	**0.72**	0.48	1.42	**0.72**	0.48	–	–	–	–	–	–
	Input Hp (max) **(C)**	1.59	**0.81**	0.53	1.59	**0.81**	0.53	1.59	**0.81**	0.53	1.59	**0.81**	0.53	–	–	–	–	–	–
2436.35	Output torque, in-lb	70808	**70808**	70808	70808	**70808**	70808	70808	**70808**	70808	70808	**70808**	70808	-	–	–	–	–	–
	OHL input shaft	(A)	(A)	**(A)**	**(A)**	**(A)**	**(A)**	**(A)**	**(A)**	**(A)**	**(A)**	**(A)**	**(A)**	–	–	–	–	–	–
	OHL output shaft **(B)**	12725	**12725**	12725	12725	**12725**	12725	12725	**12725**	12725	12725	**12725**	12725	–	–	–	–	–	–
	Output RPM	1.37	**0.70**	0.46	1.37	**0.70**	0.46	1.37	**0.70**	0.46	–	–	–	–	–	–	–	–	–
	Input Hp (max) **(C)**	1.54	**0.78**	0.52	1.54	**0.78**	0.52	1.54	**0.78**	0.52	–	–	–	–	–	–	–	–	–
2509.13	Output torque, in-lb	70808	**70808**	70808	70808	**70808**	70808	70808	**70808**	70808	–	–	–	–	–	–	–	–	–
	OHL input shaft	(A)	(A)	(A)	(A)	**(A)**	**(A)**	**(A)**	**(A)**	**(A)**	–	–	–	–	–	–	–	–	–
	OHL output shaft **(B)**	12725	**12725**	12725	12725	**12725**	12725	12725	**12725**	12725	–	–	–	–	–	–	–	–	–
	Output RPM	1.30	**0.66**	0.44	1.30	**0.66**	0.44	1.30	**0.66**	0.44	1.30	**0.66**	0.44	–	–	–	–	–	–
	Input Hp (max) **(C)**	1.46	**0.74**	0.49	1.46	**0.74**	0.49	1.46	**0.74**	0.49	1.46	**0.74**	0.49	–	–	–	–	–	–
2657.82	Output torque, in-lb	70808	**70808**	70808	70808	**70808**	70808	70808	**70808**	70808	70808	**70808**	70808	-	–	–	–	–	–
	OHL input shaft	(A)	(A)	(A)	(A)	**(A)**	**(A)**	**(A)**	**(A)**	**(A)**	**(A)**	**(A)**	**(A)**	–	–	–	–	–	–
	OHL output shaft **(B)**	12725	**12725**	12725	12725	**12725**	12725	12725	**12725**	12725	12725	**12725**	12725	–	–	–	–	–	–
	Output RPM	1.18	**0.60**	0.40	1.18	**0.60**	0.40	1.18	**0.60**	0.40	–	–	–	–	–	–	–	–	–
	Input Hp (max) **(C)**	1.32	**0.67**	0.45	1.32	**0.67**	0.45	1.32	**0.67**	0.45	–	–	–	–	–	–	–	–	–
2927.02	Output torque, in-lb	70808	**70808**	70808	70808	**70808**	70808	70808	**70808**	70808	–	–	–	–	–	–	–	–	–
	OHL input shaft	**(A)**	**(A)**	**(A)**	**(A)**	**(A)**	**(A)**	**(A)**	**(A)**	**(A)**	–	–	–	–	–	–	–	–	–
	OHL output shaft **(B)**	12725	**12725**	12725	12725	**12725**	12725	12725	**12725**	12725	–	–	–	–	–	–	–	–	–
	Output RPM	1.14	**0.58**	0.38	1.14	**0.58**	0.38	1.14	**0.58**	0.38	–	–	–	–	–	–	–	–	–
	Input Hp (max) **(C)**	1.28	**0.65**	0.43	1.28	**0.65**	0.43	1.28	**0.65**	0.43	–	–	–	–	–	–	–	–	–
3037.51	Output torque, in-lb	70808	**70808**	70808	70808	**70808**	70808	70808	**70808**	70808	–	–	–	–	–	–	–	–	–
	OHL input shaft	(A)	(A)	(A)	(A)	(A)	(A)	**(A)**	**(A)**	**(A)**	–	–	–	–	–	–	–	–	–
	OHL output shaft **(B)**	12725	**12725**	12725	12725	**12725**	12725	12725	**12725**	12725	–	–	–	–	–	–	–	–	–
	Output RPM	1.02	**0.52**	0.34	1.02	**0.52**	0.34	1.02	**0.52**	0.34	–	–	–	–	–	–	–	–	–
	Input Hp (max) **(C)**	1.15	**0.58**	0.39	1.15	**0.58**	0.39	1.15	**0.58**	0.39	–	–	–	–	–	–	–	–	–
3368.98	Output torque, in-lb	70808	**70808**	70808	70808	**70808**	70808	70808	**70808**	70808	–	–	–	–	–	–	–	–	–
	OHL input shaft	(A)	(A)	(A)	(A)	(A)	(A)	(A)	(A)	**(A)**	–	–	–	–	–	–	–	–	–
	OHL output shaft **(B)**	12725	**12725**	12725	12725	**12725**	12725	12725	**12725**	12725	–	–	–	–	–	–	–	–	–

Service factor: 1.0

(A) (B) (C) - See footnotes page on inside back cover

Blank areas (-) indicate configuration not available

ILH 148

Size: H_1485

Five-stage reduction – Clamp collar, three-piece coupled, separate

NEMA motor frame		56C			—			140TC			180TC			—		
IEC motor frame		71D			80D			90D			100D			112D		
Separate group		71			80			90			100			112		
Ratio	Output Rating data	3450	1750	1160	3450	1750	1160	3450	1750	1160	3450	1750	1160	3450	1750	1160
	Output RPM	1.00	**0.51**	0.34	1.00	**0.51**	0.34	1.00	**0.51**	0.34	1.00	**0.51**	0.34	1.00	**0.51**	0.34
	Input Hp (max) **(C)**	1.12	**0.57**	0.38	1.12	**0.57**	0.38	1.12	**0.57**	0.38	1.12	**0.57**	0.38	1.12	**0.57**	0.38
3450.55	Output torque, in-lb	70808	**70808**	70808	70808	**70808**	70808	70808	**70808**	70808	70808	**70808**	70808	70808	**70808**	70808
	OHL input shaft	(A)	(A)	(A)	(A)	(A)	(A)	(A)	(A)	(A)	(A)	(A)	(A)	(A)	(A)	(A)
	OHL output shaft **(B)**	12725	**12725**	12725	12725	**12725**	12725	12725	**12725**	12725	12725	**12725**	12725	12725	**12725**	12725
	Output RPM	0.97	**0.49**	0.33	0.97	**0.49**	0.33	0.97	**0.49**	0.33	0.97	**0.49**	0.33	0.97	**0.49**	0.33
	Input Hp (max) **(C)**	1.10	**0.56**	0.37	1.10	**0.56**	0.37	1.10	**0.56**	0.37	1.10	**0.56**	0.37	1.10	**0.56**	0.37
3539.62	Output torque, in-lb	70808	**70808**	70808	70808	**70808**	70808	70808	**70808**	70808	70808	**70808**	70808	70808	**70808**	70808
	OHL input shaft	(A)	(A)	(A)	(A)	(A)	(A)	(A)	(A)	(A)	(A)	(A)	(A)	(A)	(A)	(A)
	OHL output shaft **(B)**	11827	**12725**	12725	11827	**12725**	12725	11827	**12725**	12725	11827	**12725**	12725	11827	**12725**	12725
	Output RPM	0.88	**0.44**	0.29	0.88	**0.44**	0.29	0.88	**0.44**	0.29	0.88	**0.44**	0.29	0.88	**0.44**	0.29
	Input Hp (max) **(C)**	0.98	**0.50**	0.33	0.98	**0.50**	0.33	0.98	**0.50**	0.33	0.98	**0.50**	0.33	0.98	**0.50**	0.33
3938.75	Output torque, in-lb	70808	**70808**	70808	70808	**70808**	70808	70808	**70808**	70808	70808	**70808**	70808	70808	**70808**	70808
	OHL input shaft	(A)	(A)	(A)	(A)	(A)	(A)	(A)	(A)	(A)	(A)	(A)	(A)	(A)	(A)	(A)
	OHL output shaft **(B)**	12725	**12725**	12725	12725	**12725**	12725	12725	**12725**	12725	12725	**12725**	12725	12725	**12725**	12725
	Output RPM	0.86	**0.44**	0.29	0.86	**0.44**	0.29	0.86	**0.44**	0.29	0.86	**0.44**	0.29	0.86	**0.44**	0.29
	Input Hp (max) **(C)**	0.97	**0.49**	0.32	0.97	**0.49**	0.32	0.97	**0.49**	0.32	0.97	**0.49**	0.32	0.97	**0.49**	0.32
4012.71	Output torque, in-lb	70808	**70808**	70808	70808	**70808**	70808	70808	**70808**	70808	70808	**70808**	70808	70808	**70808**	70808
	OHL input shaft	(A)	(A)	(A)	(A)	(A)	(A)	(A)	(A)	(A)	(A)	(A)	(A)	(A)	(A)	(A)
	OHL output shaft **(B)**	12725	**12725**	12725	12725	**12725**	12725	12725	**12725**	12725	12725	**12725**	12725	12725	**12725**	12725
	Output RPM	0.77	**0.39**	0.26	0.77	**0.39**	0.26	0.77	**0.39**	0.26	0.77	**0.39**	0.26	0.77	**0.39**	0.26
	Input Hp (max) **(C)**	0.87	**0.44**	0.29	0.87	**0.44**	0.29	0.87	**0.44**	0.29	0.87	**0.44**	0.29	0.87	**0.44**	0.29
4469.99	Output torque, in-lb	70808	**70808**	70808	70808	**70808**	70808	70808	**70808**	70808	70808	**70808**	70808	70808	**70808**	70808
	OHL input shaft	(A)	(A)	(A)	(A)	(A)	(A)	(A)	(A)	(A)	(A)	(A)	(A)	(A)	(A)	(A)
	OHL output shaft **(B)**	12725	**12725**	12725	12725	**12725**	12725	12725	**12725**	12725	12725	**12725**	12725	12725	**12725**	12725
	Output RPM	0.73	**0.37**	0.25	0.73	**0.37**	0.25	0.73	**0.37**	0.25	0.73	**0.37**	0.25	0.73	**0.37**	0.25
	Input Hp (max) **(C)**	0.82	**0.42**	0.28	0.82	**0.42**	0.28	0.82	**0.42**	0.28	0.82	**0.42**	0.28	0.82	**0.42**	0.28
4701.81	Output torque, in-lb	70808	**70808**	70808	70808	**70808**	70808	70808	**70808**	70808	70808	**70808**	70808	70808	**70808**	70808
	OHL input shaft	(A)	(A)	(A)	(A)	(A)	(A)	(A)	(A)	(A)	(A)	(A)	(A)	(A)	(A)	(A)
	OHL output shaft **(B)**	12725	**12725**	12725	12725	**12725**	12725	12725	**12725**	12725	12725	**12725**	12725	12725	**12725**	12725
	Output RPM	0.68	**0.34**	0.23	0.68	**0.34**	0.23	0.68	**0.34**	0.23	–	–	–	–	–	–
	Input Hp (max) **(C)**	0.76	**0.39**	0.26	0.76	**0.39**	0.26	0.76	**0.39**	0.26	–	–	–	–	–	–
5090.25	Output torque, in-lb	70808	**70808**	70808	70808	**70808**	70808	70808	**70808**	70808	–	–	–	–	–	–
	OHL input shaft	**(A)**	**(A)**	**(A)**	**(A)**	**(A)**	**(A)**	**(A)**	**(A)**	**(A)**	–	–	–	–	–	–
	OHL output shaft **(B)**	9679	**12725**	12725	9679	**12725**	12725	9679	**12725**	12725	–	–	–	–	–	–
	Output RPM	0.60	**0.30**	0.20	0.60	**0.30**	0.20	0.60	**0.30**	0.20	–	–	–	–	–	–
	Input Hp (max) **(C)**	0.67	**0.34**	0.22	0.67	**0.34**	0.22	0.67	**0.34**	0.22	–	–	–	–	–	–
5795.44	Output torque, in-lb	70808	**70808**	70808	70808	**70808**	70808	70808	**70808**	70808	–	–	–	–	–	–
	OHL input shaft	**(A)**	**(A)**	**(A)**	**(A)**	**(A)**	**(A)**	**(A)**	**(A)**	**(A)**	–	–	–	–	–	–
	OHL output shaft **(B)**	11827	**12725**	12725	11827	**12725**	12725	11827	**12725**	12725	–	–	–	–	–	–
	Output RPM	0.53	**0.27**	0.18	0.53	**0.27**	0.18	0.53	**0.27**	0.18	–	–	–	–	–	–
	Input Hp (max) **(C)**	0.59	**0.30**	0.20	0.59	**0.30**	0.20	0.59	**0.30**	0.20	–	–	–	–	–	–
6552.42	Output torque, in-lb	70808	**70808**	70808	70808	**70808**	70808	70808	**70808**	70808	–	–	–	–	–	–
	OHL input shaft	**(A)**	**(A)**	**(A)**	**(A)**	**(A)**	**(A)**	**(A)**	**(A)**	**(A)**	–	–	–	–	–	–
	OHL output shaft **(B)**	11827	**12725**	12725	11827	**12725**	12725	11827	**12725**	12725	–	–	–	–	–	–
	Output RPM	0.50	**0.25**	0.17	0.50	**0.25**	0.17	0.50	**0.25**	0.17	0.50	**0.25**	0.17	–	–	–
	Input Hp (max) **(C)**	0.56	**0.28**	0.19	0.56	**0.28**	0.19	0.56	**0.28**	0.19	0.56	**0.28**	0.19	–	–	–
6951.91	Output torque, in-lb	70808	**70808**	70808	70808	**70808**	70808	70808	**70808**	70808	70808	**70808**	70808	–	–	–
	OHL input shaft	(A)	(A)	(A)	(A)	(A)	(A)	(A)	(A)	(A)	(A)	(A)	(A)	–	–	–
	OHL output shaft **(B)**	12725	**12725**	12725	12725	**12725**	12725	12725	**12725**	12725	12725	**12725**	12725	–	–	–

Service factor: 1.0

(A) (B) (C) - See footnotes page on inside back cover

Blank areas (-) indicate configuration not available

ILH 168

Size: H_1682

Double reduction – Clamp collar, three-piece coupled, separate

NEMA motor frame		210TC			250TC			280TC			320TC			360TC		
IEC motor frame		132D			160D			180D/200D			225D			250D		
Separate group		132			160			180			225			250		
Ratio	Output Rating data	3450	1750	1160	3450	1750	1160	3450	1750	1160	3450	1750	1160	3450	1750	1160
	Output RPM	–	–	–	–	–	–	700	**355**	235	700	**355**	235	700	**355**	235
	Input Hp (max) **(C)**	–	–	–	–	–	–	182.44	**92.54**	61.34	249.24	**136.78**	90.42	297.65	**158.68**	105.18
4.93	Output torque, in-lb	–	–	–	–	–	–	16431	**16431**	16431	22447	**24285**	24219	26807	**28174**	28174
	OHL input shaft	–	–	–	–	–	–	**(A)**	**1811**	2168	**(A)**	**2185**	2264	**(A)**	**2138**	2595
	OHL output shaft **(B)**	–	–	–	–	–	–	**(A)**	**17770**	17770	**(A)**	**17770**	17770	**(A)**	**17770**	17770
	Output RPM	–	–	–	556	**282**	187	556	**282**	187	556	**282**	187	556	**282**	187
	Input Hp (max) **(C)**	–	–	–	89.66	**45.48**	30.15	182.60	**92.62**	61.40	244.76	**134.33**	88.79	265.70	**145.11**	99.99
6.20	Output torque, in-lb	–	–	–	10155	**10155**	10155	20682	**20682**	20682	27722	**29995**	29911	30094	**32402**	33683
	OHL input shaft	–	–	–	**(A)**	**1524**	1586	**(A)**	**1734**	2091	**(A)**	**2183**	2276	**(A)**	**2110**	2527
	OHL output shaft **(B)**	–	–	–	**(A)**	**17770**	17770	**(A)**	**17770**	17770	**(A)**	**17770**	17770	**(A)**	**17770**	17770
	Output RPM	–	–	–	–	–	–	420	**213**	141	420	**213**	141	420	**213**	141
	Input Hp (max) **(C)**	–	–	–	–	–	–	182.59	**92.62**	61.39	249.44	**136.89**	90.49	297.90	**158.81**	105.27
8.21	Output torque, in-lb	–	–	–	–	–	–	27385	**27385**	27385	37412	**40475**	40365	44679	**46956**	46956
	OHL input shaft	–	–	–	–	–	–	**(A)**	**1811**	2168	**(A)**	**2185**	2264	**(A)**	**2138**	2594
	OHL output shaft **(B)**	–	–	–	–	–	–	**(A)**	**17770**	17770	**(A)**	**17770**	17770	**(A)**	**17770**	17770
	Output RPM	–	–	–	334	**169**	112	334	**169**	112	334	**169**	112	334	**169**	112
	Input Hp (max) **(C)**	–	–	–	89.60	**45.45**	30.13	182.48	**92.56**	61.36	244.60	**134.24**	88.74	265.53	**145.02**	99.93
10.34	Output torque, in-lb	–	–	–	16925	**16925**	16925	34470	**34470**	34470	46203	**49991**	49852	50156	**54003**	56139
	OHL input shaft	–	–	-	**(A)**	**1524**	1586	**(A)**	**1734**	2091	**(A)**	**2183**	2276	**(A)**	**2110**	2527
	OHL output shaft **(B)**	-	-	-	17770	**17770**	17770	17770	**17770**	17770	17770	**17770**	17770	17770	**17770**	17770
	Output RPM	–	–	–	260	**132**	87	260	**132**	87	260	**132**	87	260	**132**	87
	Input Hp (max) **(C)**	–	–	–	89.63	**45.47**	30.14	182.55	**92.60**	61.38	229.54	**125.37**	85.41	230.69	**126.00**	86.80
13.27	Output torque, in-lb	–	–	–	21729	**21729**	21729	44254	**44254**	44254	55645	**59914**	61581	55922	**60218**	62585
	OHL input shaft	–	–	-	**(A)**	**1486**	1585	**(A)**	**1625**	1982	**(A)**	**2150**	2265	**(A)**	**2088**	2522
	OHL output shaft **(B)**	-	-	-	17770	**17770**	17770	17770	**17770**	17770	17770	**17770**	17770	17770	**17770**	17770
	Output RPM	223	**113**	75	223	**113**	75	223	**113**	75	223	**113**	75	223	**113**	75
	Input Hp (max) **(C)**	60.68	**32.58**	21.70	89.64	**45.47**	30.14	182.57	**92.61**	61.39	208.97	**114.16**	78.63	210.06	**114.71**	79.06
15.44	Output torque, in-lb	17115	**18115**	18206	25284	**25284**	25284	51496	**51496**	51496	58943	**63480**	65964	59251	**63788**	66320
	OHL input shaft	**(A)**	**949**	988	**(A)**	**1450**	1580	**(A)**	**1526**	1900	**(A)**	**2108**	2262	**(A)**	**2050**	2519
	OHL output shaft **(B)**	17770	**17770**	17770	17770	**17770**	17770	17770	**17770**	17770	17770	**17770**	17770	17770	**17770**	17770
	Output RPM	196	**99**	66	196	**99**	66	196	**99**	66	196	**99**	66	196	**99**	66
	Input Hp (max) **(C)**	58.97	**31.66**	21.32	89.63	**45.47**	30.14	180.24	**92.60**	61.38	191.80	**104.78**	72.18	192.83	**105.34**	72.57
17.60	Output torque, in-lb	18960	**20068**	20388	28819	**28819**	28819	57949	**58695**	58695	61668	**66412**	69017	61997	**66772**	69398
	OHL input shaft	**(A)**	**946**	985	**(A)**	**1413**	1585	**(A)**	**1288**	1817	**(A)**	**2077**	2286	**(A)**	**2018**	2513
	OHL output shaft **(B)**	17770	**17770**	17770	17770	**17770**	17770	17770	**17770**	17770	17770	**17770**	17770	17770	**17770**	17770
	Output RPM	179	**91**	60	179	**91**	60	179	**91**	60	179	**91**	60	179	**91**	60
	Input Hp (max) **(C)**	57.57	**30.92**	20.82	89.64	**45.47**	30.14	169.85	**92.61**	61.39	180.11	**98.39**	67.79	181.09	**98.94**	68.16
19.30	Output torque, in-lb	20298	**21489**	21829	31605	**31605**	31605	59885	**64369**	64369	63504	**68388**	71083	63848	**68768**	71472
	OHL input shaft	**(A)**	**944**	983	**(A)**	**1383**	1583	**(A)**	**1101**	1738	**(A)**	**2056**	2288	**(A)**	**1997**	2511
	OHL output shaft **(B)**	17770	**17770**	17770	17770	**17770**	17770	17770	**17770**	17770	17770	**17770**	17770	17770	**17770**	17770
	Output RPM	148	**75**	50	148	**75**	50	148	**75**	50	148	**75**	50	148	**75**	50
	Input Hp (max) **(C)**	54.14	**29.07**	19.58	89.64	**45.47**	30.14	150.03	**89.62**	61.38	157.63	**86.11**	59.34	158.50	**86.59**	59.66
23.26	Output torque, in-lb	23004	**24355**	24745	38088	**38088**	38088	63749	**75078**	77573	66978	**72132**	74990	67349	**72539**	75395
	OHL input shaft	**(A)**	**951**	990	**(A)**	**1313**	1587	**(A)**	**778**	1316	**(A)**	**2015**	2291	**(A)**	**1957**	2506
	OHL output shaft **(B)**	17770	**17770**	17770	17770	**17770**	17770	17770	**17770**	17770	17770	**17770**	17770	17770	**17770**	17770
	Output RPM	134	**68**	45	134	**68**	45	134	**68**	45	134	**68**	45	134	**68**	45
	Input Hp (max) **(C)**	52.09	**27.98**	18.84	89.47	**45.47**	30.14	139.01	**82.90**	57.13	145.73	**79.60**	54.86	146.53	**80.04**	55.16
25.84	Output torque, in-lb	24588	**26039**	26453	42233	**42311**	42311	65621	**77147**	80214	68793	**74075**	77016	69169	**74486**	77443
	OHL input shaft	**(A)**	**951**	989	**(A)**	**1225**	1542	**(A)**	**759**	1276	**(A)**	**1998**	2271	**(A)**	**1940**	2507
	OHL output shaft **(B)**	17770	**17770**	17770	17770	**17770**	17770	17770	**17770**	17770	17770	**17770**	17770	17770	**17770**	17770

Service factor: 1.0

(A) (B) (C) - See footnotes page on inside back cover

Blank areas (-) indicate configuration not available

ILH 168

Size: H_1682

Double reduction – Clamp collar, three-piece coupled, separate

NEMA motor frame		210TC			250TC			280TC			320TC			360TC		
IEC motor frame		132D			160D			180D/200D			225D			250D		
Separate group		132			160			180			225			250		
Ratio	Output Rating data	3450	1750	1160	3450	1750	1160	3450	1750	1160	3450	1750	1160	3450	1750	1160
	Output RPM	118	**60**	40	118	**60**	40	118	**60**	40	118	**60**	40	118	**60**	40
	Input Hp (max) **(C)**	49.41	**26.54**	17.88	84.56	**45.47**	30.14	128.74	**75.36**	51.93	132.41	**72.33**	49.86	133.16	**72.73**	50.13
29.27	Output torque, in-lb	26421	**27982**	28430	45215	**47934**	47934	68839	**79444**	82590	70800	**76241**	79287	71202	**76663**	79729
	OHL input shaft	**(A)**	**948**	987	**(A)**	**1035**	1481	**(A)**	**737**	1255	**(A)**	**1977**	2274	**(A)**	**1918**	2505
	OHL output shaft **(B)**	17770	**17770**	17770	17770	**17770**	17770	17770	**17770**	17770	17770	**17770**	17770	17770	**17770**	17770
	Output RPM	–	–	–	–	–	–	102	**52**	34	102	**52**	34	102	**52**	34
	Input Hp (max) **(C)**	–	–	–	–	–	–	115.47	**67.16**	46.25	117.90	**64.42**	44.37	118.56	**64.76**	44.64
33.88	Output torque, in-lb	–	–	–	–	–	–	71464	**81946**	85138	72974	**78605**	81679	73383	**79014**	82170
	OHL input shaft	–	–	–	–	–	–	**(A)**	**739**	1257	**(A)**	**1978**	2279	**(A)**	**1920**	2510
	OHL output shaft **(B)**	–	–	–	–	–	–	17770	**17770**	17770	17770	**17770**	17770	17770	**17770**	17770
	Output RPM	–	–	–	–	–	–	87	**44**	29	87	**44**	29	–	–	–
	Input Hp (max) **(C)**	–	–	–	–	–	–	103.63	**59.30**	40.86	104.07	**56.85**	39.18	–	–	–
39.45	Output torque, in-lb	–	–	–	–	–	–	74686	**84253**	87576	75004	**80771**	83983	–	–	–
	OHL input shaft	–	–	–	–	–	–	**(A)**	**695**	1212	**(A)**	**1933**	2281	–	–	–
	OHL output shaft **(B)**	–	–	–	–	–	–	17770	**17770**	17770	17770	**17770**	17770	–	–	–
	Output RPM	–	–	–	–	–	–	82	**42**	28	82	**42**	28	–	–	–
	Input Hp (max) **(C)**	–	–	–	–	–	–	98.09	**56.20**	38.72	98.60	**53.86**	37.11	–	–	–
42.09	Output torque, in-lb	–	–	–	–	–	–	75420	**85189**	88535	75815	**81648**	84855	–	–	–
	OHL input shaft	–	–	–	–	–	–	**(A)**	**686**	1204	**(A)**	**1924**	2281	–	–	–
	OHL output shaft **(B)**	–	–	–	–	–	–	17770	**17770**	17770	17770	**17770**	17770	–	–	–
	Output RPM	–	–	–	–	–	–	74	**38**	25	–	–	–	–	–	–
	Input Hp (max) **(C)**	–	–	–	–	–	–	83.76	**51.55**	35.30	–	–	–	–	–	–
46.61	Output torque, in-lb	–	–	–	–	–	–	71322	**86527**	89385	–	–	–	–	–	–
	OHL input shaft	–	–	–	–	–	–	**(A)**	**676**	1212	–	–	–	–	–	–
	OHL output shaft **(B)**	–	–	–	–	–	–	17770	**17770**	17770	–	–	–	–	–	–

Service factor: 1.0

(A) (B) (C) - See footnotes page on inside back cover

Blank areas (-) indicate configuration not available

ILH 168

Size: H_1683

Triple reduction – Clamp collar, three-piece coupled, separate

NEMA motor frame		210TC			250TC			280TC			320TC			360TC		
IEC motor frame		132D			160D			180D/200D			225D			250D		
Separate group		132			160			180			225			250		
Ratio	Output Rating data	3450	1750	1160	3450	1750	1160	3450	1750	1160	3450	1750	1160	3450	1750	1160
	Output RPM	–	–	–	84	**43**	28	84	**43**	28	84	**43**	28	84	**43**	28
	Input Hp (max) **(C)**	–	–	–	89.64	**45.47**	30.14	154.63	**83.94**	55.64	154.63	**83.94**	55.64	154.63	**83.94**	55.64
40.99	Output torque, in-lb	–	–	–	67123	**67123**	67123	115792	**123914**	123914	115792	**123914**	123914	115792	**123914**	123914
	OHL input shaft	–	–	–	**(A)**	**1523**	1523	**(A)**	**1808**	2165	**(A)**	**2188**	2283	**(A)**	**2527**	2781
	OHL output shaft **(B)**	–	–	–	17770	**17770**	17770	17770	**17770**	17770	17770	**17770**	17770	17770	**17770**	17770
	Output RPM	–	–	–	64	**33**	22	64	**33**	22	64	**33**	22	64	**33**	22
	Input Hp (max) **(C)**	–	–	–	89.64	**45.47**	30.14	124.45	**64.24**	42.58	124.45	**64.24**	42.58	124.45	**64.24**	42.58
53.56	Output torque, in-lb	–	–	–	87704	**87704**	87704	121764	**123914**	123914	121764	**123914**	123914	121764	**123914**	123914
	OHL input shaft	–	–	–	**(A)**	**1478**	1478	**(A)**	**1881**	2236	**(A)**	**2204**	2297	**(A)**	**2592**	2794
	OHL output shaft **(B)**	–	–	–	17770	**17770**	17770	17770	**17770**	17770	17770	**17770**	17770	17770	**17770**	17770
	Output RPM	55	**28**	18	55	**28**	18	55	**28**	18	55	**28**	18	55	**28**	18
	Input Hp (max) **(C)**	60.78	**32.63**	21.70	89.64	**45.47**	30.14	107.53	**54.54**	36.16	107.53	**54.54**	36.16	107.53	**54.54**	36.16
63.08	Output torque, in-lb	70045	**74120**	74381	103296	**103296**	103296	123914	**123914**	123914	123914	**123914**	123914	123914	**123914**	123914
	OHL input shaft	**(A)**	**949**	987	**(A)**	**1440**	1440	**(A)**	**1916**	2272	**(A)**	**2206**	2299	**(A)**	**2627**	2797
	OHL output shaft **(B)**	17770	**17770**	17770	17770	**17770**	17770	17770	**17770**	17770	17770	**17770**	17770	17770	**17770**	17770
	Output RPM	48	**24**	16	48	**24**	16	48	**24**	16	48	**24**	16	–	–	–
	Input Hp (max) **(C)**	59.07	**31.72**	21.36	89.63	**45.46**	30.14	93.74	**47.55**	31.52	93.74	**47.55**	31.52	–	–	–
72.36	Output torque, in-lb	78080	**82664**	83960	118478	**118478**	118478	123914	**123914**	123914	123914	**123914**	123914	–	–	–
	OHL input shaft	**(A)**	**946**	985	**(A)**	**1403**	1403	**(A)**	**1941**	2298	**(A)**	**2208**	2300	–	–	–
	OHL output shaft **(B)**	17770	**17770**	17770	17770	**17770**	17770	17770	**17770**	17770	17770	**17770**	17770	–	–	–
	Output RPM	43	**22**	15	43	**22**	15	43	**22**	15	43	**22**	15	–	–	–
	Input Hp (max) **(C)**	57.65	**30.96**	20.85	85.05	**43.14**	28.60	85.05	**43.14**	28.60	85.05	**43.14**	28.60	–	–	–
79.75	Output torque, in-lb	83995	**88919**	90330	123914	**123914**	123914	123914	**123914**	123914	123914	**123914**	123914	–	–	–
	OHL input shaft	**(A)**	**944**	983	**(A)**	**1395**	1395	**(A)**	**1955**	2312	**(A)**	**2208**	2300	–	–	–
	OHL output shaft **(B)**	17770	**17770**	17770	17770	**17770**	17770	17770	**17770**	17770	17770	**17770**	17770	–	–	–
	Output RPM	37	**19**	12	37	**19**	12	37	**19**	12	37	**19**	12	–	–	–
	Input Hp (max) **(C)**	54.80	**29.43**	19.82	71.93	**36.49**	24.19	71.93	**36.49**	24.19	71.93	**36.49**	24.19	–	–	–
94.30	Output torque, in-lb	94401	**99951**	101542	123914	**123914**	123914	123914	**123914**	123914	123914	**123914**	123914	–	–	–
	OHL input shaft	**(A)**	**951**	990	**(A)**	**1419**	1419	**(A)**	**1978**	2335	**(A)**	**2193**	2285	–	–	–
	OHL output shaft **(B)**	17770	**17770**	17770	17770	**17770**	17770	17770	**17770**	17770	17770	**17770**	17770	–	–	–
	Output RPM	32	**16**	11	32	**16**	11	32	**16**	11	32	**16**	11	–	–	–
	Input Hp (max) **(C)**	52.27	**28.07**	18.91	63.11	**32.01**	21.22	63.11	**32.01**	21.22	63.11	**32.01**	21.22	–	–	–
107.48	Output torque, in-lb	102629	**108672**	110411	123914	**123914**	123914	123914	**123914**	123914	123914	**123914**	123914	–	–	–
	OHL input shaft	**(A)**	**950**	990	**(A)**	**1436**	1436	**(A)**	**1993**	2350	**(A)**	**2190**	2283	–	–	–
	OHL output shaft **(B)**	17770	**17770**	17770	17770	**17770**	17770	17770	**17770**	17770	17770	**17770**	17770	–	–	–
	Output RPM	28	**14**	9	28	**14**	9	28	**14**	9	–	–	–	–	–	–
	Input Hp (max) **(C)**	49.31	**26.49**	17.84	54.88	**27.84**	18.45	54.88	**27.84**	18.45	–	–	–	–	–	–
123.59	Output torque, in-lb	111325	**117927**	119791	123914	**123914**	123914	123914	**123914**	123914	–	–	–	–	–	–
	OHL input shaft	**(A)**	**948**	987	**(A)**	**1451**	1451	**(A)**	**2007**	2364	–	–	–	–	–	–
	OHL output shaft **(B)**	17770	**17770**	17770	17770	**17770**	17770	17770	**17770**	17770	–	–	–	–	–	–
	Output RPM	24	**12**	8	24	**12**	8	24	**12**	8	–	–	–	–	–	–
	Input Hp (max) **(C)**	46.36	**24.35**	16.14	48.01	**24.35**	16.14	48.01	**24.35**	16.14	–	–	–	–	–	–
141.28	Output torque, in-lb	119650	**123914**	123914	123914	**123914**	123914	123914	**123914**	123914	–	–	–	–	–	–
	OHL input shaft	**(A)**	**948**	989	**(A)**	**1463**	1463	**(A)**	**2019**	2376	–	–	–	–	–	–
	OHL output shaft **(B)**	17770	**17770**	17770	17770	**17770**	17770	17770	**17770**	17770	–	–	–	–	–	–
	Output RPM	21	**11**	7	21	**11**	7	21	**11**	7	–	–	–	–	–	–
	Input Hp (max) **(C)**	41.43	**21.02**	13.93	41.43	**21.02**	13.93	41.43	**21.02**	13.93	–	–	–	–	–	–
163.72	Output torque, in-lb	123914	**123914**	123914	123914	**123914**	123914	123914	**123914**	123914	–	–	–	–	–	–
	OHL input shaft	**(A)**	**952**	992	**(A)**	**1474**	1474	**(A)**	**2030**	2387	–	–	–	–	–	–
	OHL output shaft **(B)**	17770	**17770**	17770	17770	**17770**	17770	17770	**17770**	17770	–	–	–	–	–	–
	Output RPM	19	**10**	7	19	**10**	7	–	–	–	–	–	–	–	–	–
	Input Hp (max) **(C)**	38.03	**19.29**	12.79	38.03	**19.29**	12.79	–	–	–	–	–	–	–	–	–
178.38	Output torque, in-lb	123914	**123914**	123914	123914	**123914**	123914	–	–	–	–	–	–	–	–	–
	OHL input shaft	**(A)**	**948**	988	**(A)**	**1480**	1480	–	–	–	–	–	–	–	–	–
	OHL output shaft **(B)**	17770	**17770**	17770	17770	**17770**	17770	–	–	–	–	–	–	–	–	–

Service factor: 1.0

(A) (B) (C) - See footnotes page on inside back cover

Blank areas (-) indicate configuration not available

ILH 168

Size: H_1683

Triple reduction – Clamp collar, three-piece coupled, separate

NEMA motor frame		210TC			250TC			280TC			320TC			360TC		
IEC motor frame		132D			160D			180D/200D			225D			250D		
Separate group		132			160			180			225			250		
Ratio	Output Rating data	3450	1750	1160	3450	1750	1160	3450	1750	1160	3450	1750	1160	3450	1750	1160
	Output RPM	17	**9**	6	17	**9**	6	–	–	–	–	–	–	–	–	–
	Input Hp (max) **(C)**	34.14	**17.32**	11.48	34.14	**17.32**	11.48	–	–	–	–	–	–	–	–	–
198.71	Output torque, in-lb	123914	**123914**	123914	123914	**123914**	123914	–	–	–	–	–	–	–	–	–
	OHL input shaft	**(A)**	**951**	991	**(A)**	**1487**	1487	–	–	–	–	–	–	–	–	–
	OHL output shaft **(B)**	17770	**17770**	17770	17770	**17770**	17770	–	–	–	–	–	–	–	–	–
	Output RPM	16	**8**	6	16	**8**	6	–	–	–	–	–	–	–	–	–
	Input Hp (max) **(C)**	32.23	**16.35**	10.84	32.23	**16.35**	10.84	–	–	–	–	–	–	–	–	–
210.49	Output torque, in-lb	123914	**123914**	123914	123914	**123914**	123914	–	–	–	–	–	–	–	–	–
	OHL input shaft	**(A)**	**952**	992	**(A)**	**1491**	1491	–	–	–	–	–	–	–	–	–
	OHL output shaft **(B)**	17770	**17770**	17770	17770	**17770**	17770	–	–	–	–	–	–	–	–	–
	Output RPM	15	**7**	5	15	**7**	5	–	–	–	–	–	–	–	–	–
	Input Hp (max) **(C)**	28.65	**14.53**	9.63	28.65	**14.53**	9.63	–	–	–	–	–	–	–	–	–
236.72	Output torque, in-lb	123914	**123914**	123914	123914	**123914**	123914	–	–	–	–	–	–	–	–	–
	OHL input shaft	**(A)**	**954**	994	**(A)**	**1497**	1497	–	–	–	–	–	–	–	–	–
	OHL output shaft **(B)**	17770	**17770**	17770	17770	**17770**	17770	–	–	–	–	–	–	–	–	–
	Output RPM	14	**7**	5	14	**7**	5	–	–	–	–	–	–	–	–	–
	Input Hp (max) **(C)**	26.80	**13.60**	9.01	26.80	**13.60**	9.01	–	–	–	–	–	–	–	–	–
253.08	Output torque, in-lb	123914	**123914**	123914	123914	**123914**	123914	–	–	–	–	–	–	–	–	–
	OHL input shaft	**(A)**	**955**	995	**(A)**	**1500**	1500	–	–	–	–	–	–	–	–	–
	OHL output shaft **(B)**	17770	**17770**	17770	17770	**17770**	17770	–	–	–	–	–	–	–	–	–
	Output RPM	13	**7**	4	–	–	–	–	–	–	–	–	–	–	–	–
	Input Hp (max) **(C)**	25.28	**12.82**	8.50	–	–	–	–	–	–	–	–	–	–	–	–
268.29	Output torque, in-lb	123914	**123914**	123914	–	–	–	–	–	–	–	–	–	–	–	–
	OHL input shaft	**(A)**	**956**	995	–	–	–	–	–	–	–	–	–	–	–	–
	OHL output shaft **(B)**	17770	**17770**	17770	–	–	–	–	–	–	–	–	–	–	–	–
	Output RPM	12	**6**	4	–	–	–	–	–	–	–	–	–	–	–	–
	Input Hp (max) **(C)**	23.45	**11.90**	7.89	–	–	–	–	–	–	–	–	–	–	–	–
289.23	Output torque, in-lb	123914	**123914**	123914	–	–	–	–	–	–	–	–	–	–	–	–
	OHL input shaft	**(A)**	**956**	996	–	–	–	–	–	–	–	–	–	–	–	–
	OHL output shaft **(B)**	17770	**17770**	17770	–	–	–	–	–	–	–	–	–	–	–	–
	Output RPM	11	**6**	4	–	–	–	–	–	–	–	–	–	–	–	–
	Input Hp (max) **(C)**	21.64	**10.98**	7.28	–	–	–	–	–	–	–	–	–	–	–	–
313.41	Output torque, in-lb	123914	**123914**	123914	–	–	–	–	–	–	–	–	–	–	–	–
	OHL input shaft	**(A)**	**957**	996	–	–	–	–	–	–	–	–	–	–	–	–
	OHL output shaft **(B)**	17770	**17770**	17770	–	–	–	–	–	–	–	–	–	–	–	–
	Output RPM	10	**5**	3	–	–	–	–	–	–	–	–	–	–	–	–
	Input Hp (max) **(C)**	18.82	**10.07**	6.68	–	–	–	–	–	–	–	–	–	–	–	–
341.61	Output torque, in-lb	117453	**123914**	123914	–	–	–	–	–	–	–	–	–	–	–	–
	OHL input shaft	**(A)**	**957**	997	–	–	–	–	–	–	–	–	–	–	–	–
	OHL output shaft **(B)**	17770	**17770**	17770	–	–	–	–	–	–	–	–	–	–	–	–

Service factor: 1.0

(A) (B) (C) - See footnotes page on inside back cover

Blank areas (-) indicate configuration not available

ILH 168

Size: H_1684

Four-stage reduction – Clamp collar, three-piece coupled, separate

NEMA motor frame		56C			—			140TC			180TC			—			210TC		
IEC motor frame		71D			80D			90D			100D			112D			132D		
Separate group		71			80			90			100			112			132		
Ratio	Output Rating data	3450	1750	1160	3450	1750	1160	3450	1750	1160	3450	1750	1160	3450	1750	1160	3450	1750	1160
	Output RPM	10.39	**5.27**	3.49	10.39	**5.27**	3.49	10.39	**5.27**	3.49	10.39	**5.27**	3.49	10.39	**5.27**	3.49	10.39	**5.27**	3.49
	Input Hp (max) **(C)**	3.98	**2.02**	1.34	4.85	**2.46**	1.63	9.58	**4.86**	6.87	17.59	**8.92**	5.91	20.42	**10.36**	6.93	20.42	**10.36**	6.93
332.11	Output torque, in-lb	24147	**24161**	24179	29425	**29424**	29412	58123	**58130**	58103	106720	**106691**	106642	123914	**123914**	123914	123914	**123914**	123914
	OHL input shaft	(A)	(A)	(A)	(A)	(A)	(A)	(A)	(A)	(A)	(A)	(A)	(A)	(A)	(A)	(A)	(A)	(A)	(A)
	OHL output shaft **(B)**	17770	**17770**	17770	17770	**17770**	17770	17770	**17770**	17770	17770	**17770**	17770	17770	**17770**	17770	17770	**17770**	17770
	Output RPM	9.30	**4.72**	3.13	9.30	**4.72**	3.13	9.30	**4.72**	3.13	9.30	**4.72**	3.13	9.30	**4.72**	3.13	9.30	**4.72**	3.13
	Input Hp (max) **(C)**	3.98	**2.02**	1.34	4.85	**2.46**	1.63	9.17	**4.65**	6.15	16.70	**8.47**	5.61	18.29	**9.28**	6.20	18.29	**9.28**	6.20
370.81	Output torque, in-lb	26960	**26976**	26996	32854	**32852**	32839	62117	**62098**	62052	113125	**113111**	113022	123914	**123914**	123914	123914	**123914**	123914
	OHL input shaft	(A)	(A)	(A)	(A)	(A)	(A)	(A)	(A)	(A)	(A)	(A)	(A)	(A)	(A)	(A)	(A)	(A)	(A)
	OHL output shaft **(B)**	17770	**17770**	17770	17770	**17770**	17770	17770	**17770**	17770	17770	**17770**	17770	17770	**17770**	17770	17770	**17770**	17770
	Output RPM	8.58	**4.35**	2.89	8.58	**4.35**	2.89	8.58	**4.35**	2.89	8.58	**4.35**	2.89	8.58	**4.35**	2.89	8.58	**4.35**	2.89
	Input Hp (max) **(C)**	3.98	**2.02**	1.34	4.85	**2.46**	1.63	8.83	**4.48**	5.67	16.07	**8.15**	5.40	16.87	**8.56**	5.72	16.87	**8.56**	5.72
401.98	Output torque, in-lb	29226	**29243**	29266	35615	**35613**	35599	64842	**64856**	64865	118007	**117986**	117936	123914	**123914**	123914	123914	**123914**	123914
	OHL input shaft	(A)	(A)	(A)	(A)	(A)	(A)	(A)	(A)	(A)	(A)	(A)	(A)	(A)	(A)	(A)	(A)	(A)	(A)
	OHL output shaft **(B)**	17770	**17770**	17770	17770	**17770**	17770	17770	**17770**	17770	17770	**17770**	17770	17770	**17770**	17770	17770	**17770**	17770
	Output RPM	8.09	**4.10**	2.72	8.09	**4.10**	2.72	8.09	**4.10**	2.72	8.09	**4.10**	2.72	8.09	**4.10**	2.72	8.09	**4.10**	2.72
	Input Hp (max) **(C)**	3.98	**2.02**	1.34	4.85	**2.46**	1.63	9.17	**4.65**	5.35	15.91	**8.07**	5.39	15.91	**8.07**	5.39	15.91	**8.07**	5.39
426.39	Output torque, in-lb	31001	**31019**	31043	37778	**37776**	37761	71428	**71405**	71352	123914	**123914**	123914	123914	**123914**	123914	123914	**123914**	123914
	OHL input shaft	(A)	(A)	(A)	(A)	(A)	(A)	(A)	(A)	(A)	(A)	(A)	(A)	(A)	(A)	(A)	(A)	(A)	(A)
	OHL output shaft **(B)**	17770	**17770**	17770	17770	**17770**	17770	17770	**17770**	17770	17770	**17770**	17770	17770	**17770**	17770	17770	**17770**	17770
	Output RPM	7.08	**3.59**	2.38	7.08	**3.59**	2.38	7.08	**3.59**	2.38	7.08	**3.59**	2.38	7.08	**3.59**	2.38	7.08	**3.59**	2.38
	Input Hp (max) **(C)**	3.98	**2.02**	1.34	4.85	**2.46**	1.63	9.17	**4.65**	4.68	13.92	**7.06**	4.72	13.92	**7.06**	4.72	13.92	**7.06**	4.72
487.42	Output torque, in-lb	35439	**35459**	35486	43185	**43183**	43166	81651	**81626**	81565	123914	**123914**	123914	123914	**123914**	123914	123914	**123914**	123914
	OHL input shaft	(A)	(A)	(A)	(A)	(A)	(A)	(A)	(A)	(A)	(A)	(A)	(A)	(A)	(A)	(A)	(A)	(A)	(A)
	OHL output shaft **(B)**	17770	**17770**	17770	17770	**17770**	17770	17770	**17770**	17770	17770	**17770**	17770	17770	**17770**	17770	17770	**17770**	17770
	Output RPM	7.46	**3.79**	2.51	7.46	**3.79**	2.51	7.46	**3.79**	2.51	7.46	**3.79**	2.51	7.46	**3.79**	2.51	7.46	**3.79**	2.51
	Input Hp (max) **(C)**	3.98	**2.02**	1.34	4.85	**2.46**	1.63	8.83	**4.48**	4.93	14.67	**7.44**	4.98	14.67	**7.44**	4.98	14.67	**7.44**	4.98
462.23	Output torque, in-lb	33607	**33626**	33652	40953	**40951**	40935	74561	**74577**	74588	123914	**123914**	123914	123914	**123914**	123914	123914	**123914**	123914
	OHL input shaft	(A)	(A)	(A)	(A)	(A)	(A)	(A)	(A)	(A)	(A)	(A)	(A)	(A)	(A)	(A)	(A)	(A)	(A)
	OHL output shaft **(B)**	17770	**17770**	17770	17770	**17770**	17770	17770	**17770**	17770	17770	**17770**	17770	17770	**17770**	17770	17770	**17770**	17770
	Output RPM	6.53	**3.31**	2.20	6.53	**3.31**	2.20	6.53	**3.31**	2.20	6.53	**3.31**	2.20	6.53	**3.31**	2.20	6.53	**3.31**	2.20
	Input Hp (max) **(C)**	3.98	**2.02**	1.34	4.85	**2.46**	1.63	8.83	**4.48**	4.32	12.84	**6.51**	4.35	12.84	**6.51**	4.35	12.84	**6.51**	4.35
528.39	Output torque, in-lb	38418	**38440**	38469	46815	**46813**	46794	85233	**85252**	85264	123914	**123914**	123914	123914	**123914**	123914	123914	**123914**	123914
	OHL input shaft	(A)	(A)	(A)	(A)	(A)	(A)	(A)	(A)	(A)	(A)	(A)	(A)	(A)	(A)	(A)	(A)	(A)	(A)
	OHL output shaft **(B)**	17770	**17770**	17770	17770	**17770**	17770	17770	**17770**	17770	17770	**17770**	17770	17770	**17770**	17770	17770	**17770**	17770
	Output RPM	6.11	**3.10**	2.05	6.11	**3.10**	2.05	6.11	**3.10**	2.05	6.11	**3.10**	2.05	6.11	**3.10**	2.05	6.11	**3.10**	2.05
	Input Hp (max) **(C)**	3.98	**2.02**	1.34	4.85	**2.46**	1.63	9.17	**4.65**	4.04	12.01	**6.09**	4.07	12.01	**6.09**	4.07	12.01	**6.09**	4.07
564.83	Output torque, in-lb	41067	**41091**	41123	50044	**50042**	50022	94620	**94591**	94521	123914	**123914**	123914	123914	**123914**	123914	123914	**123914**	123914
	OHL input shaft	(A)	(A)	(A)	(A)	(A)	(A)	(A)	(A)	(A)	(A)	(A)	(A)	(A)	(A)	(A)	(A)	(A)	(A)
	OHL output shaft **(B)**	17770	**17770**	17770	17770	**17770**	17770	17770	**17770**	17770	17770	**17770**	17770	17770	**17770**	17770	17770	**17770**	17770
	Output RPM	5.61	**2.84**	1.88	5.61	**2.84**	1.88	5.61	**2.84**	1.88	5.61	**2.84**	1.88	5.61	**2.84**	1.88	5.61	**2.84**	1.88
	Input Hp (max) **(C)**	3.98	**2.02**	1.34	4.85	**2.46**	1.63	9.17	**4.65**	3.71	11.02	**5.59**	3.74	11.02	**5.59**	3.74	11.02	**5.59**	3.74
615.41	Output torque, in-lb	44745	**44770**	44805	54526	**54522**	54501	103093	**103061**	102984	123914	**123914**	123914	123914	**123914**	123914	123914	**123914**	123914
	OHL input shaft	(A)	(A)	(A)	(A)	(A)	(A)	(A)	(A)	(A)	(A)	(A)	(A)	(A)	(A)	(A)	(A)	(A)	(A)
	OHL output shaft **(B)**	17770	**17770**	17770	17770	**17770**	17770	17770	**17770**	17770	17770	**17770**	17770	17770	**17770**	17770	17770	**17770**	17770
	Output RPM	4.97	**2.52**	1.67	4.97	**2.52**	1.67	4.97	**2.52**	1.67	4.97	**2.52**	1.67	4.97	**2.52**	1.67	4.97	**2.52**	1.67
	Input Hp (max) **(C)**	3.98	**2.02**	1.34	4.85	**2.46**	1.63	8.32	**4.22**	3.29	9.77	**4.96**	3.31	9.77	**4.96**	3.31	9.77	**4.96**	3.31
694.17	Output torque, in-lb	50471	**50500**	50539	61504	**61500**	61477	105508	**105501**	105604	123914	**123914**	123914	123914	**123914**	123914	123914	**123914**	123914
	OHL input shaft	(A)	(A)	(A)	(A)	(A)	(A)	(A)	(A)	(A)	(A)	(A)	(A)	(A)	(A)	(A)	(A)	(A)	(A)
	OHL output shaft **(B)**	17770	**17770**	17770	17770	**17770**	17770	17770	**17770**	17770	17770	**17770**	17770	17770	**17770**	17770	17770	**17770**	17770
	Output RPM	4.41	**2.24**	1.48	4.41	**2.24**	1.48	4.41	**2.24**	1.48	4.41	**2.24**	1.48	4.41	**2.24**	1.48	4.41	**2.24**	1.48
	Input Hp (max) **(C)**	3.98	**2.02**	1.34	4.85	**2.46**	1.63	8.67	**4.40**	2.92	8.67	**4.40**	2.92	8.67	**4.40**	2.92	8.67	**4.40**	2.92
782.02	Output torque, in-lb	56858	**56891**	56935	69287	**69283**	69256	123914	**123914**	123914	123914	**123914**	123914	123914	**123914**	123914	123914	**123914**	123914
	OHL input shaft	(A)	(A)	(A)	(A)	(A)	(A)	(A)	(A)	(A)	(A)	(A)	(A)	(A)	(A)	(A)	(A)	(A)	(A)
	OHL output shaft **(B)**	17770	**17770**	17770	17770	**17770**	17770	17770	**17770**	17770	17770	**17770**	17770	17770	**17770**	17770	17770	**17770**	17770

Service factor: 1.0

(A) (B) (C) - See footnotes page on inside back cover

Blank areas (-) indicate configuration not available

ILH 168

Size: H_1684

Four-stage reduction – Clamp collar, three-piece coupled, separate

NEMA motor frame		56C			—			140TC			180TC			—			210TC		
IEC motor frame		71D			80D			90D			100D			112D			132D		
Separate group		71			80			90			100			112			132		
Ratio	Output Rating data	3450	1750	1160	3450	1750	1160	3450	1750	1160	3450	1750	1160	3450	1750	1160	3450	1750	1160
	Output RPM	3.86	**1.96**	1.30	3.86	**1.96**	1.30	3.86	**1.96**	1.30	3.86	**1.96**	1.30	3.86	**1.96**	1.30	3.86	**1.96**	1.30
	Input Hp (max) **(C)**	3.98	**2.02**	1.34	4.85	**2.46**	1.63	7.59	**3.85**	2.55	7.59	**3.85**	2.55	7.59	**3.85**	2.55	7.59	**3.85**	2.55
893.72	Output torque, in-lb	64980	**65017**	65067	79184	**79179**	79149	123914	**123914**	123914	123914	**123914**	123914	123914	**123914**	123914	123914	**123914**	123914
	OHL input shaft	(A)	(A)	(A)	(A)	(A)	(A)	(A)	(A)	(A)	(A)	(A)	(A)	(A)	(A)	(A)	(A)	(A)	(A)
	OHL output shaft **(B)**	17770	**17770**	17770	17770	**17770**	17770	17770	**17770**	17770	17770	**17770**	17770	17770	**17770**	17770	17770	**17770**	17770
	Output RPM	3.32	**1.69**	1.12	3.32	**1.69**	1.12	3.32	**1.69**	1.12	3.32	**1.69**	1.12	3.32	**1.69**	1.12	3.32	**1.69**	1.12
	Input Hp (max) **(C)**	3.98	**2.02**	1.34	4.85	**2.46**	1.63	6.54	**3.32**	2.20	6.54	**3.32**	2.20	6.54	**3.32**	2.20	6.54	**3.32**	2.20
1037.72	Output torque, in-lb	75449	**75493**	75551	91942	**91937**	91901	123914	**123914**	123914	123914	**123914**	123914	123914	**123914**	123914	123914	**123914**	123914
	OHL input shaft	(A)	(A)	(A)	(A)	(A)	(A)	(A)	(A)	(A)	(A)	(A)	(A)	(A)	(A)	(A)	(A)	(A)	(A)
	OHL output shaft **(B)**	17770	**17770**	17770	17770	**17770**	17770	17770	**17770**	17770	17770	**17770**	17770	17770	**17770**	17770	17770	**17770**	17770
	Output RPM	2.96	**1.50**	0.99	2.96	**1.50**	0.99	2.96	**1.50**	0.99	2.96	**1.50**	0.99	2.96	**1.50**	0.99	2.96	**1.50**	0.99
	Input Hp (max) **(C)**	3.98	**2.02**	1.34	4.85	**2.46**	1.63	5.81	**2.95**	1.95	5.81	**2.95**	1.95	5.81	**2.95**	1.95	5.81	**2.95**	1.95
1167.03	Output torque, in-lb	84851	**84900**	84965	103399	**103393**	103353	123914	**123914**	123914	123914	**123914**	123914	123914	**123914**	123914	123914	**123914**	123914
	OHL input shaft	(A)	(A)	(A)	(A)	(A)	(A)	(A)	(A)	(A)	(A)	(A)	(A)	(A)	(A)	(A)	(A)	(A)	(A)
	OHL output shaft **(B)**	17770	**17770**	17770	17770	**17770**	17770	17770	**17770**	17770	17770	**17770**	17770	17770	**17770**	17770	17770	**17770**	17770
	Output RPM	2.60	**1.32**	0.87	2.60	**1.32**	0.87	2.60	**1.32**	0.87	2.60	**1.32**	0.87	2.60	**1.32**	0.87	2.60	**1.32**	0.87
	Input Hp (max) **(C)**	3.98	**2.02**	1.34	4.85	**2.46**	1.63	5.10	**2.59**	1.72	5.10	**2.59**	1.72	5.10	**2.59**	1.72	5.10	**2.59**	1.72
1328.86	Output torque, in-lb	96617	**96673**	96747	117737	**117730**	117685	123914	**123914**	123914	123914	**123914**	123914	123914	**123914**	123914	123914	**123914**	123914
	OHL input shaft	(A)	(A)	(A)	(A)	(A)	(A)	(A)	(A)	(A)	(A)	(A)	(A)	(A)	(A)	(A)	(A)	(A)	(A)
	OHL output shaft **(B)**	17770	**17770**	17770	17770	**17770**	17770	17770	**17770**	17770	17770	**17770**	17770	17770	**17770**	17770	17770	**17770**	17770
	Output RPM	2.23	**1.13**	0.75	2.23	**1.13**	0.75	2.23	**1.13**	0.75	2.23	**1.13**	0.75	2.23	**1.13**	0.75	2.23	**1.13**	0.75
	Input Hp (max) **(C)**	3.98	**2.02**	1.34	4.39	**2.23**	1.48	4.39	**2.23**	1.48	4.39	**2.23**	1.48	4.39	**2.23**	1.48	4.39	**2.23**	1.48
1545.11	Output torque, in-lb	112341	**112405**	112491	123914	**123914**	123914	123914	**123914**	123914	123914	**123914**	123914	123914	**123914**	123914	123914	**123914**	123914
	OHL input shaft	(A)	(A)	(A)	(A)	(A)	(A)	(A)	(A)	(A)	(A)	(A)	(A)	(A)	(A)	(A)	(A)	(A)	(A)
	OHL output shaft **(B)**	17770	**17770**	17770	17770	**17770**	17770	17770	**17770**	17770	17770	**17770**	17770	17770	**17770**	17770	17770	**17770**	17770
	Output RPM	2.02	**1.02**	0.68	2.02	**1.02**	0.68	2.02	**1.02**	0.68	2.02	**1.02**	0.68	2.02	**1.02**	0.68	–	–	–
	Input Hp (max) **(C)**	3.41	**1.73**	1.33	3.96	**2.01**	1.33	3.96	**2.01**	1.33	3.96	**2.01**	1.33	3.96	**2.01**	1.33	–	–	–
1711.49	Output torque, in-lb	106616	**106634**	106936	123914	**123914**	123914	123914	**123914**	123914	123914	**123914**	123914	123914	**123914**	123914	–	–	–
	OHL input shaft	(A)	**(A)**	**(A)**	**(A)**	**(A)**	**(A)**	**(A)**	**(A)**	**(A)**	**(A)**	**(A)**	**(A)**	**(A)**	**(A)**	**(A)**	–	–	–
	OHL output shaft **(B)**	17770	**17770**	17770	17770	**17770**	17770	17770	**17770**	17770	17770	**17770**	17770	17770	**17770**	17770	–	–	–
	Output RPM	1.78	**0.90**	0.60	1.78	**0.90**	0.60	1.78	**0.90**	0.60	1.78	**0.90**	0.60	1.78	**0.90**	0.60	–	–	–
	Input Hp (max) **(C)**	3.41	**1.73**	1.18	3.50	**1.77**	1.18	3.50	**1.77**	1.18	3.50	**1.77**	1.18	3.50	**1.77**	1.18	–	–	–
1939.74	Output torque, in-lb	120834	**120855**	121198	123914	**123914**	123914	123914	**123914**	123914	123914	**123914**	123914	123914	**123914**	123914	–	–	–
	OHL input shaft	(A)	(A)	(A)	**(A)**	**(A)**	**(A)**	**(A)**	**(A)**	**(A)**	**(A)**	**(A)**	**(A)**	**(A)**	**(A)**	**(A)**	–	–	–
	OHL output shaft **(B)**	17770	**17770**	17770	17770	**17770**	17770	17770	**17770**	17770	17770	**17770**	17770	17770	**17770**	17770	–	–	–
	Output RPM	1.57	**0.80**	0.53	1.57	**0.80**	0.53	1.57	**0.80**	0.53	1.57	**0.80**	0.53	1.57	**0.80**	0.53	1.57	**0.80**	0.53
	Input Hp (max) **(C)**	3.09	**1.57**	1.04	3.09	**1.57**	1.04	3.09	**1.57**	1.04	3.09	**1.57**	1.04	3.09	**1.57**	1.04	3.09	**1.57**	1.04
2193.14	Output torque, in-lb	123914	**123914**	123914	123914	**123914**	123914	123914	**123914**	123914	123914	**123914**	123914	123914	**123914**	123914	123914	**123914**	123914
	OHL input shaft	(A)	(A)	(A)	(A)	(A)	(A)	(A)	(A)	(A)	(A)	(A)	(A)	(A)	(A)	(A)	(A)	(A)	(A)
	OHL output shaft **(B)**	17770	**17770**	17770	17770	**17770**	17770	17770	**17770**	17770	17770	**17770**	17770	17770	**17770**	17770	17770	**17770**	17770
	Output RPM	1.35	**0.69**	0.45	1.35	**0.69**	0.45	1.35	**0.69**	0.45	1.35	**0.69**	0.45	–	–	–	–	–	–
	Input Hp (max) **(C)**	2.66	**1.35**	0.89	2.66	**1.35**	0.89	2.66	**1.35**	0.89	2.66	**1.35**	0.89	–	–	–	–	–	–
2551.01	Output torque, in-lb	123914	**123914**	123914	123914	**123914**	123914	123914	**123914**	123914	123914	**123914**	123914	–	–	–	–	–	–
	OHL input shaft	(A)	(A)	(A)	(A)	(A)	(A)	(A)	(A)	**(A)**	**(A)**	**(A)**	**(A)**	–	–	–	–	–	–
	OHL output shaft **(B)**	17770	**17770**	17770	17770	**17770**	17770	17770	**17770**	17770	17770	**17770**	17770	–	–	–	–	–	–

Service factor: 1.0

(A) (B) (C) - See footnotes page on inside back cover

Blank areas (-) indicate configuration not available

ILH 168

Size: H_1685

Five-stage reduction – Clamp collar, three-piece coupled, separate

NEMA motor frame		56C			—			140TC			180TC			—			210TC		
IEC motor frame		71D			80D			90D			100D			112D			132D		
Separate group		71			80			90			100			112			132		
Ratio	Output Rating data	3450	1750	1160	3450	1750	1160	3450	1750	1160	3450	1750	1160	3450	1750	1160	3450	1750	1160
	Output RPM	1.37	0.70	0.46	1.37	0.70	0.46	1.37	0.70	0.46	1.37	0.70	0.46	1.37	0.70	0.46	1.37	0.70	0.46
	Input Hp (max) (C)	2.69	1.37	0.91	2.69	1.37	0.91	2.69	1.37	0.91	2.69	1.37	0.91	2.69	1.37	0.91	2.69	1.37	0.91
2517.61	Output torque, in-lb	123914	123914	123914	123914	123914	123914	123914	123914	123914	123914	123914	123914	123914	123914	123914	123914	123914	123914
	OHL input shaft	(A)	(A)	(A)	(A)	(A)	(A)	(A)	(A)	(A)	(A)	(A)	(A)	(A)	(A)	(A)	(A)	(A)	(A)
	OHL output shaft (B)	17770	17770	17770	17770	17770	17770	17770	17770	17770	17770	17770	17770	17770	17770	17770	17770	17770	17770
	Output RPM	1.19	.60	.40	1.19	0.60	0.40	1.19	0.60	0.40	1.19	0.60	0.40	1.19	0.60	0.40	1.19	0.60	0.40
	Input Hp (max) (C)	2.33	1.18	.78	2.33	1.18	0.78	2.33	1.18	0.78	2.33	1.18	0.78	2.33	1.18	0.78	2.33	1.18	0.78
2908.07	Output torque, in-lb	123914	123914	123914	123914	123914	123914	123914	123914	123914	123914	123914	123914	123914	123914	123914	123914	123914	123914
	OHL input shaft	(A)	(A)	(A)	(A)	(A)	(A)	(A)	(A)	(A)	(A)	(A)	(A)	(A)	(A)	(A)	(A)	(A)	(A)
	OHL output shaft (B)	17770	17770	17770	17770	17770	17770	17770	17770	17770	17770	17770	17770	17770	17770	17770	17770	17770	17770
	Output RPM	1.04	.53	.35	1.04	.53	.35	1.04	.53	.35	1.04	.53	.35	1.04	.53	.35	1.04	.53	.35
	Input Hp (max) (C)	2.05	1.04	.69	2.05	1.04	.69	2.05	1.04	.69	2.05	1.04	.69	2.05	1.04	.69	2.05	1.04	.69
3307.14	Output torque, in-lb	12394	12394	12394	123914	123914	123914	123914	123914	123914	123914	123914	123914	123914	123914	123914	123914	123914	123914
	OHL input shaft	(A)	(A)	(A)	(A)	(A)	(A)	(A)	(A)	(A)	(A)	(A)	(A)	(A)	(A)	(A)	(A)	(A)	(A)
	OHL output shaft (B)	17770	17770	17770	17770	17770	17770	17770	17770	17770	17770	17770	17770	17770	17770	17770	17770	17770	17770
	Output RPM	0.92	0.47	0.31	0.92	0.47	0.31	0.92	0.47	0.31	0.92	0.47	0.31	0.92	0.47	0.31	0.92	0.47	0.31
	Input Hp (max) (C)	1.82	0.92	0.61	1.82	0.92	0.61	1.82	0.92	0.61	1.82	0.92	0.61	1.82	0.92	0.61	1.82	0.92	0.61
3730.40	Output torque, in-lb	123914	123914	123914	123914	123914	123914	123914	123914	123914	123914	123914	123914	123914	123914	123914	123914	123914	123914
	OHL input shaft	(A)	(A)	(A)	(A)	(A)	(A)	(A)	(A)	(A)	(A)	(A)	(A)	(A)	(A)	(A)	(A)	(A)	(A)
	OHL output shaft (B)	17770	17770	17770	17770	17770	17770	17770	17770	17770	17770	17770	17770	17770	17770	17770	17770	17770	17770
	Output RPM	0.81	0.41	0.27	0.81	0.41	0.27	0.81	0.41	0.27	0.81	0.41	0.27	0.81	0.41	0.27	0.81	0.41	0.27
	Input Hp (max) (C)	1.59	0.81	0.53	1.59	0.81	0.53	1.59	0.81	0.53	1.59	0.81	0.53	1.59	0.81	0.53	1.59	0.81	0.53
4263.25	Output torque, in-lb	123914	123914	123914	123914	123914	123914	123914	123914	123914	123914	123914	123914	123914	123914	123914	123914	123914	123914
	OHL input shaft	(A)	(A)	(A)	(A)	(A)	(A)	(A)	(A)	(A)	(A)	(A)	(A)	(A)	(A)	(A)	(A)	(A)	(A)
	OHL output shaft (B)	17770	17770	17770	17770	17770	17770	17770	17770	17770	17770	17770	17770	17770	17770	17770	17770	17770	17770
	Output RPM	0.70	0.35	0.23	0.70	0.35	0.23	0.70	0.35	0.23	0.70	0.35	0.23	0.70	0.35	0.23	0.70	0.35	0.23
	Input Hp (max) (C)	1.37	0.69	0.46	1.37	0.69	0.46	1.37	0.69	0.46	1.37	0.69	0.46	1.37	0.69	0.46	1.37	0.69	0.46
4952.83	Output torque, in-lb	123914	123914	123914	123914	123914	123914	123914	123914	123914	123914	123914	123914	123914	123914	123914	123914	123914	123914
	OHL input shaft	(A)	(A)	(A)	(A)	(A)	(A)	(A)	(A)	(A)	(A)	(A)	(A)	(A)	(A)	(A)	(A)	(A)	(A)
	OHL output shaft (B)	17770	17770	17770	17770	17770	17770	17770	17770	17770	17770	17770	17770	17770	17770	17770	17770	17770	17770
	Output RPM	0.62	0.31	0.21	0.62	0.31	0.21	0.62	0.31	0.21	0.62	0.31	0.21	0.62	0.31	0.21	0.62	0.31	0.21
	Input Hp (max) (C)	1.21	0.62	0.41	1.21	0.62	0.41	1.21	0.62	0.41	1.21	0.62	0.41	1.21	0.62	0.41	1.21	0.62	0.41
5584.97	Output torque, in-lb	123914	123914	123914	123914	123914	123914	123914	123914	123914	123914	123914	123914	123914	123914	123914	123914	123914	123914
	OHL input shaft	(A)	(A)	(A)	(A)	(A)	(A)	(A)	(A)	(A)	(A)	(A)	(A)	(A)	(A)	(A)	(A)	(A)	(A)
	OHL output shaft (B)	17770	17770	17770	17770	17770	17770	17770	17770	17770	17770	17770	17770	17770	17770	17770	17770	17770	17770
	Output RPM	0.53	0.27	0.18	0.53	0.27	0.18	0.53	0.27	0.18	0.53	0.27	0.18	0.53	0.27	0.18	0.53	0.27	0.18
	Input Hp (max) (C)	1.05	0.53	0.35	1.05	0.53	0.35	1.05	0.53	0.35	1.05	0.53	0.35	1.05	0.53	0.35	1.05	0.53	0.35
6466.19	Output torque, in-lb	123914	123914	123914	123914	123914	123914	123914	123914	123914	123914	123914	123914	123914	123914	123914	123914	123914	123914
	OHL input shaft	(A)	(A)	(A)	(A)	(A)	(A)	(A)	(A)	(A)	(A)	(A)	(A)	(A)	(A)	(A)	(A)	(A)	(A)
	OHL output shaft (B)	17770	17770	17770	17770	17770	17770	17770	17770	17770	17770	17770	17770	17770	17770	17770	17770	17770	17770
	Output RPM	0.47	0.24	0.16	0.47	0.24	0.16	0.47	0.24	0.16	0.47	0.24	0.16	0.47	0.24	0.16	0.47	0.24	0.16
	Input Hp (max) (C)	0.92	0.47	0.31	0.92	0.47	0.31	0.92	0.47	0.31	0.92	0.47	0.31	0.92	0.47	0.31	0.92	0.47	0.31
7374.54	Output torque, in-lb	123914	123914	123914	123914	123914	123914	123914	123914	123914	123914	123914	123914	123914	123914	123914	123914	123914	123914
	OHL input shaft	(A)	(A)	(A)	(A)	(A)	(A)	(A)	(A)	(A)	(A)	(A)	(A)	(A)	(A)	(A)	(A)	(A)	(A)
	OHL output shaft (B)	17770	17770	17770	17770	17770	17770	17770	17770	17770	17770	17770	17770	17770	17770	17770	17770	17770	17770

Service factor: 1.0

(A) (B) (C) - See footnotes page on inside back cover

Blank areas (-) indicate configuration not available

ILH Integral Gearmotors - 60 Hz

1750 RPM

Input power (Hp)	Speed (RPM)	Ratio	OHL (LBF) (B)	Output torque (in-lb)	Gear stage	Service factor (SF)	Catalog number
0.25	1101	1.59	–	14	1	8.08	H_381GH71C4
	946	1.85	–	17	1	8.08	
	854	2.05	–	18	1	8.08	
	781	2.24	50	20	1	8.08	
	700	2.50	102	23	1	8.08	
	641	2.73	102	25	1	7.96	
	583	3.00	211	27	1	7.64	
	529	3.31	269	30	1	7.28	
	477	3.67	258	33	1	6.92	
	422	4.15	371	37	1	6.44	
	382	4.58	371	41	1	6.12	
	338	5.18	543	47	1	5.64	
	296	5.92	543	53	1	5.04	
	260	6.73	583	61	1	4.52	
	243	7.20	583	65	1	4.28	
	211	8.30	834	75	1	3.80	
	188	9.33	834	84	1	3.36	
	367	4.77	518	43	2	8.08	H_382GH71C4
	315	5.55	518	50	2	8.08	
	284	6.16	518	55	2	8.08	
	261	6.71	518	60	2	8.08	
	233	7.50	279	68	2	8.08	
	233	7.52	279	68	2	8.08	
	200	8.75	279	79	2	8.08	
	180	9.70	279	87	2	8.08	
	166	10.57	279	95	2	8.08	
	148	11.82	416	106	2	8.08	
	135	12.92	416	116	2	8.08	
	123	14.18	416	128	2	8.08	
	112	15.64	416	141	2	7.92	
	101	17.33	416	156	2	7.35	
	89	19.64	546	177	2	6.68	
	81	21.67	546	195	2	6.20	
	71	24.50	546	221	2	5.61	
	63	27.97	881	252	2	5.05	
	55	31.80	881	286	2	4.54	
	51	34.04	881	306	2	4.29	
	45	39.24	881	353	2	3.79	
	40	44.12	1117	397	2	3.42	
	57	30.74	881	277	3	6.88	H_383GH71C4
	52	33.82	881	304	3	6.38	
	45	39.28	881	354	3	5.50	
	41	42.53	881	383	3	5.08	
	36	48.10	1117	433	3	4.50	
	33	52.86	1117	476	3	4.09	
	30	58.30	1117	525	3	3.71	
	27	64.58	1117	581	3	3.35	
	24	71.91	1117	647	3	3.01	
	21	82.52	1117	743	3	2.62	
	19	91.34	1117	822	3	2.37	
	17	103.89	1117	935	3	2.08	
	15	118.55	1117	1067	3	1.82	
	13	133.57	1117	1203	3	1.62	
	12	149.26	1117	1344	3	1.45	
	10	170.24	1117	1533	3	1.27	
	9	191.75	1117	1726	3	1.13	
	8.9	196.31	1117	1768	4	1.10	H_384GH71C4
	7.5	232.71	1117	1947	4	0.93	
	6.7	259.73	1117	1947	4	0.83	
	5.8	302.34	1117	1947	4	0.72	
	5.1	343.88	1117	1947	4	0.63	
	4.7	372.49	1117	1947	4	0.58	
	4.3	407.48	1117	1947	4	0.53	
	4.1	429.52	1117	1947	4	0.50	
	4.0	435.08	1117	1947	4	0.50	
	3.7	473.14	1117	1947	4	0.46	
	3.5	494.05	1117	1947	4	0.44	

(B) - See footnotes page on inside back cover

ILH integral gearmotors

1750 RPM - 60 Hz

Input power (Hp)	Speed (RPM)	Ratio	OHL (LBF) (B)	Output torque (in-lb)	Gear stage	Service factor (SF)	Catalog number
0.25 (cont.)	3.4	510.72	1117	1947	4	0.42	H_384GH71C4
	3.2	547.78	1117	1947	4	0.39	
	3.0	575.25	1117	1947	4	0.38	
	2.8	624.78	1117	1947	4	0.35	
	2.6	683.61	1117	1947	4	0.32	
	2.5	703.72	1117	1947	4	0.31	
	2.3	748.01	1117	1947	4	0.29	
	2.2	795.76	1117	1947	4	0.27	
	2.1	853.56	1117	1947	4	0.25	
	2.0	898.93	1117	1947	4	0.24	
	1.8	961.70	1117	1947	4	0.22	
	1.7	1007.82	1117	1947	4	0.21	
	1.6	1074.67	1117	1947	4	0.20	
	1.5	1145.72	1117	1947	4	0.19	
	1.4	1238.86	1117	1947	4	0.17	
	1.3	1380.60	1117	1947	4	0.16	
	1.2	1412.99	1117	1947	4	0.15	
	1.1	1588.34	1117	1947	4	0.14	
	0.87	2012.24	1117	1947	5	0.11	H_385GH71C4
	0.66	2662.55	1117	1947	5	0.08	
	0.64	2719.02	1117	1947	5	0.08	
	0.59	2950.26	1117	1947	5	0.07	
	0.53	3323.03	1117	1947	5	0.07	
	0.47	3689.10	1117	1947	5	0.06	
	0.42	4155.22	1117	1947	5	0.05	
	0.38	4546.72	1117	1947	5	0.05	
	0.37	4761.61	1117	1947	5	0.05	
	0.30	5794.97	1117	1947	5	0.04	
	0.29	6097.65	1117	1947	5	0.04	
	0.26	6680.22	1117	1947	5	0.03	
	0.23	7510.99	1117	1947	5	0.03	
	726	2.41	195	22	1	8.08	H_481GH71C4
	648	2.70	161	24	1	8.08	
	593	2.95	124	27	1	8.08	
	540	3.24	106	29	1	8.08	
	492	3.56	99	32	1	8.08	
	452	3.87	99	35	1	8.08	
	416	4.21	191	38	1	8.08	
	379	4.62	191	42	1	7.84	
	344	5.08	303	46	1	7.28	
	299	5.85	303	53	1	6.52	
	276	6.33	627	57	1	6.12	
	250	7.00	627	63	1	5.60	
	214	8.17	711	74	1	4.92	
	193	9.09	711	82	1	4.48	
	175	10.00	826	90	1	4.12	
	155	11.30	826	102	1	3.72	
	258	6.79	904	61	2	8.08	H_482GH71C4
	160	10.93	919	98	2	8.08	
	143	12.25	937	110	2	8.08	
	131	13.38	937	120	2	8.08	
	119	14.68	937	132	2	8.08	
	108	16.17	937	146	2	8.08	
	100	17.55	1142	158	2	8.08	
	91	19.13	1142	172	2	8.08	
	84	20.95	1142	189	2	7.84	
	76	23.07	1142	208	2	7.28	
	66	26.53	1142	239	2	6.52	
	61	28.74	1517	259	2	6.10	
	55	31.77	1517	286	2	5.62	
	47	37.06	1517	334	2	4.93	
	42	41.26	1517	371	2	4.50	
	39	45.38	1884	409	2	4.13	
	34	51.28	1884	462	2	3.71	
	49	35.59	1517	320	3	8.08	H_483GH71C4
	42	41.38	1517	373	3	8.08	
	38	45.91	1884	413	3	8.08	

(B) - See footnotes page on inside back cover

ILH integral gearmotors

1750 RPM - 60 Hz

Input power (Hp)	Speed (RPM)	Ratio	OHL (LBF) (B)	Output torque (in-lb)	Gear stage	Service factor (SF)	Catalog number
0.25 (cont.)	35	50.00	1884	450	3	8.08	H_483GH71C4
	31	55.92	1884	503	3	7.92	
	29	61.14	1884	550	3	7.24	
	26	67.10	1884	604	3	6.59	
	24	73.99	1986	666	3	5.98	
	21	82.02	1986	738	3	5.40	
	19	92.91	1986	837	3	4.76	
	17	102.52	1986	923	3	4.32	
	15	115.91	1986	1044	3	3.82	
	13	132.34	1986	1192	3	3.34	
	12	150.48	1986	1355	3	2.94	
	11	161.05	1986	1450	3	2.75	
	9	185.66	1986	1672	3	2.38	
	8	208.77	1986	1880	3	2.12	
	8.2	214.43	1986	1931	4	2.06	H_484GH71C4
	7.8	223.91	1986	2016	4	1.98	
	7.3	239.26	1986	2154	4	1.85	
	7.1	246.06	1986	2215	4	1.80	
	6.8	256.07	1986	2306	4	1.73	
	6.5	271.49	1986	2444	4	1.63	
	6.0	289.78	1986	2609	4	1.53	
	5.7	308.48	1986	2777	4	1.43	
	5.3	330.15	1986	2973	4	1.34	
	4.9	360.75	1986	3248	4	1.23	
	4.3	410.81	1986	3699	4	1.08	
	3.9	451.44	1986	3983	4	0.98	
	3.6	483.15	1986	3983	4	0.92	
	3.3	533.08	1986	3983	4	0.83	
	2.9	606.12	1986	3983	4	0.73	
	2.6	681.37	1986	3983	4	0.65	
	2.6	685.52	1986	3983	4	0.65	
	2.3	779.49	1986	3983	4	0.57	
	2.1	834.24	1986	3983	4	0.53	
	2.0	890.84	1986	3983	4	0.50	
	1.7	1012.73	1986	3983	4	0.44	
	1.6	1081.43	1986	3983	4	0.41	
	1.5	1159.56	1986	3983	4	0.38	
	1.4	1235.92	1986	3983	4	0.36	
	1.3	1336.75	1986	3983	4	0.33	
	1.3	1405.02	1986	3983	4	0.31	
	1.2	1503.14	1986	3983	4	0.29	
	1.1	1540.98	1986	3983	4	0.29	
	1.0	1732.21	1986	3983	4	0.26	
	0.90	1947.82	1986	3983	4	0.23	
	0.98	1778.67	1986	3983	5	0.25	H_485GH71C4
	0.87	2008.72	1986	3983	5	0.22	
	0.79	2206.70	1986	3983	5	0.20	
	0.76	2293.45	1986	3983	5	0.19	
	0.70	2511.77	1986	3983	5	0.18	
	0.67	2599.16	1986	3983	5	0.17	
	0.60	2903.72	1986	3983	5	0.15	
	0.59	2960.36	1986	3983	5	0.15	
	0.54	3260.90	1986	3983	5	0.14	
	0.44	3945.73	1986	3983	5	0.11	
	0.39	4504.57	1986	3983	5	0.10	
	0.37	4785.26	1986	3983	5	0.09	
	0.32	5482.14	1986	3983	5	0.08	
	0.26	6638.89	1986	3983	5	0.07	
	0.24	7285.30	1986	3983	5	0.06	
	132	13.29	1275	120	2	8.08	H_582GH71C4
	116	15.09	1400	136	2	8.08	
	109	16.13	1450	145	2	8.08	
	96	18.3	1600	165	2	8.08	
	89	19.74	1650	178	2	8.08	
	82	21.37	1750	192	2	8.08	
	75	23.24	1850	209	2	8.08	
	68	25.75	1950	232	2	8.08	

(B) - See footnotes page on inside back cover

ILH integral gearmotors

1750 RPM - 60 Hz

Input power (Hp)	Speed (RPM)	Ratio	OHL (LBF) (B)	Output torque (in-lb)	Gear stage	Service factor (SF)	Catalog number
0.25 (cont.)	62	28.29	2100	255	2	8.08	H_582GH71C4
	55	31.55	2200	284	2	8.08	
	51	34.57	2200	311	2	8.08	
	46	38.14	2200	343	2	8.08	
	40	43.61	2200	393	2	8.08	
	36	49.26	2200	444	2	8.08	
	32	54.69	2200	492	2	8.08	
	41	42.99	2200	387	3	8.08	H_583GH71C4
	37	47.77	2200	430	3	8.08	
	32	54.94	2200	495	3	8.08	
	30	59.09	2200	532	3	8.08	
	25	68.85	2200	620	3	8.08	
	23	74.64	2200	672	3	8.04	
	22	81.21	2200	731	3	7.4	
	20	88.72	2200	799	3	6.76	
	18	97.38	2200	877	3	6.16	
	16	107.49	2200	968	3	5.56	
	14	121.27	2200	1092	3	4.96	
	13	133.36	2200	1201	3	4.48	
	12	147.66	2200	1329	3	4.08	
	10	173.17	2200	1559	3	3.48	
	9	191.09	2200	1720	3	3.12	
	8	212.58	2200	1914	3	2.84	
	7	238.86	2200	2151	3	2.52	
	566	3.09	52	28	1	8.08	H_681GH71C4
	507	3.45	68	31	1	8.08	
	468	3.74	73	34	1	8.08	
	413	4.24	160	38	1	8.08	
	384	4.56	160	41	1	8.08	
	355	4.93	453	44	1	8.08	
	327	5.36	453	48	1	8.08	
	295	5.92	453	53	1	7.72	
	273	6.42	657	58	1	7.40	H_681GH71C4
	242	7.23	657	65	1	6.92	
	221	7.92	1078	71	1	6.60	
	198	8.82	1078	79	1	6.20	
	174	10.08	1366	91	1	5.72	
	157	11.18	1366	101	1	5.32	
	141	12.40	1366	112	1	4.96	
	119	14.74	962	133	2	8.08	H_682GH71C4
	106	16.45	962	148	2	8.08	
	98	17.82	1306	160	2	8.08	
	87	20.20	1306	182	2	8.08	
	80	21.76	1306	196	2	8.08	
	74	23.53	1306	212	2	8.08	
	68	25.55	1306	230	2	8.08	
	62	28.25	1940	254	2	8.04	
	57	30.60	1940	276	2	7.52	
	51	34.49	1940	310	2	6.80	
	46	37.76	1940	340	2	6.31	
	42	42.06	1940	379	2	5.75	
	36	48.09	2765	433	2	5.13	
	29	59.91	2765	539	3	8.08	H_683GH71C4
	26	67.14	2765	604	3	8.08	
	24	73.30	3091	660	3	8.08	
	22	80.46	3091	724	3	8.08	
	20	88.59	3091	798	3	8.08	
	18	96.15	3091	866	3	8.08	
	17	104.80	3091	944	3	7.50	
	15	114.78	3170	1033	3	6.85	
	14	126.41	3170	1138	3	6.22	
	12	145.38	3170	1309	3	5.41	
	11	157.50	3170	1418	3	4.99	
	10	174.08	3170	1567	3	4.52	
	9	203.09	3170	1829	3	3.87	
	8	226.07	3170	2035	3	3.48	
	7	248.68	3170	2239	3	3.16	

(B) - See footnotes page on inside back cover

ILH integral gearmotors

1750 RPM - 60 Hz

Input power (Hp)	Speed (RPM)	Ratio	OHL (LBF) (B)	Output torque (in-lb)	Gear stage	Service factor (SF)	Catalog number
0.25 (cont.)	6	281.01	3170	2530	3	2.80	**H_683GH71C4**
	5.4	325.65	3170	2932	4	2.42	**H_684GH71C4**
	4.8	363.45	3170	3272	4	2.16	
	4.7	375.72	3170	3383	4	2.09	
	4.2	421.24	3170	3793	4	1.87	
	4.0	436.14	3170	3927	4	1.80	
	3.9	454.92	3170	4096	4	1.73	
	3.6	481.21	3170	4333	4	1.63	
	3.4	522.24	3170	4702	4	1.51	
	3.2	554.44	3170	4992	4	1.42	
	3.0	576.20	3170	5188	4	1.36	
	2.7	653.63	3170	5885	4	1.20	
	2.6	672.23	3170	6052	4	1.17	
	2.4	722.43	3170	6504	4	1.09	
	2.3	754.56	3091	6794	4	1.04	
	2.1	823.13	3170	7081	4	0.96	
	2.0	860.65	3170	7081	4	0.91	
	1.9	912.66	3170	7081	4	0.86	
	1.9	930.15	3170	7081	4	0.85	
	1.7	1052.01	3170	7081	4	0.75	
	1.6	1070.90	3170	7081	4	0.73	
	1.5	1134.00	3170	7081	4	0.69	
	1.5	1206.65	3170	7081	4	0.65	
	1.3	1307.25	3170	7081	4	0.60	
	1.3	1366.80	3170	7081	4	0.58	
	1.2	1444.86	3170	7081	4	0.54	
	1.2	1521.45	3170	7081	4	0.52	
	1.1	1624.17	3170	7081	4	0.48	
	0.85	2064.04	3170	7081	4	0.38	
	0.83	2109.23	3170	7081	4	0.37	
	0.75	2320.18	3170	7081	4	0.34	
	1.0	1718.39	3170	7081	5	0.46	**H_685GH71C4**
	0.95	1840.03	3170	7081	5	0.43	
	0.88	1978.11	3170	7081	5	0.40	
	0.71	2463.30	3170	7081	5	0.32	
	0.65	2672.15	3170	7081	5	0.29	
	0.61	2879.82	3170	7081	5	0.27	
	0.57	3093.30	3170	7081	5	0.25	
	0.56	3150.38	3170	7081	5	0.25	
	0.50	3526.28	3170	7081	5	0.22	
	0.44	3988.69	3170	7081	5	0.20	
	0.39	4440.01	3170	7081	5	0.18	
	0.35	5064.09	3170	7081	5	0.16	
	0.31	5680.43	3170	7081	5	0.14	
	0.26	6830.90	3170	7081	5	0.12	
	0.23	7695.42	3170	7081	5	0.10	
	23	74.88	4856	674	3	8.08	**H_883GH71C4**
	21	83.58	4856	753	3	8.08	
	19	90.53	4856	815	3	8.08	
	17	102.61	4856	924	3	8.08	
	16	110.54	4856	995	3	8.08	
	15	119.52	4856	1076	3	7.96	
	13	129.79	4856	1169	3	7.44	
	12	143.50	4856	1292	3	6.88	
	11	155.46	4856	1400	3	6.44	
	10	175.18	4856	1577	3	5.83	
	9	191.80	4856	1727	3	5.40	
	8	213.64	4856	1923	3	4.92	
	7	244.29	4856	2199	3	4.38	
	6	270.90	4856	2439	3	3.99	
	6	300.41	4856	2705	3	3.64	
	5.3	332.46	4856	2993	4	4.97	**H_884GH71C4**
	5.0	350.43	4856	3155	4	4.71	
	4.9	358.15	4856	3225	4	4.61	
	4.4	397.10	4856	3575	4	4.16	

(B) - See footnotes page on inside back cover

ILH integral gearmotors

1750 RPM - 60 Hz

Input power (Hp)	Speed (RPM)	Ratio	OHL (LBF) (B)	Output torque (in-lb)	Gear stage	Service factor (SF)	Catalog number
0.25 (cont.)	4.2	418.25	4856	3766	4	3.95	H_884GH71C4
	3.8	458.61	4856	4129	4	3.60	
	3.7	472.99	4856	4259	4	3.49	
	3.4	521.26	4856	4693	4	3.17	
	3.3	529.60	4856	4768	4	3.12	
	3.0	585.06	4856	5268	4	2.82	
	2.9	601.63	4856	5417	4	2.75	
	2.7	646.66	4856	5822	4	2.55	
	2.6	682.81	4856	6148	4	2.42	
	2.3	759.27	4856	6836	4	2.18	
	2.3	773.78	4856	6967	4	2.13	
	2.2	799.16	4856	7195	4	2.07	
	2.0	886.21	4856	7979	4	1.86	
	1.9	932.72	4856	8398	4	1.77	
	1.8	987.02	4856	8887	4	1.67	
	1.7	1004.50	4856	9044	4	1.64	
	1.7	1028.46	4856	9260	4	1.61	
	1.5	1140.49	4856	10268	4	1.45	
	1.4	1226.26	4856	11041	4	1.35	
	1.3	1304.42	4856	11744	4	1.27	
	1.3	1387.89	4856	12496	4	1.19	
	1.2	1495.48	4856	13465	4	1.10	
	1.2	1526.08	4856	13740	4	1.08	
	1.0	1714.80	4856	14870	4	0.96	
	1.0	1743.46	4856	14870	4	0.95	
	0.90	1941.99	4856	14870	4	0.85	
	0.88	1979.53	4856	14870	4	0.83	
	0.83	2102.87	4856	14870	4	0.79	
	0.79	2213.25	4856	14870	4	0.75	
	0.77	2282.15	4856	14870	5	0.72	H_885GH71C4
	0.70	2513.79	4856	14870	5	0.66	
	0.68	2571.64	4856	14870	5	0.64	
	0.63	2757.33	4856	14870	5	0.60	
	0.61	2858.50	4856	14870	5	0.58	
	0.55	3170.87	4856	14870	5	0.52	
	0.54	3256.89	4856	14870	5	0.51	
	0.48	3680.02	4856	14870	5	0.45	
	0.47	3749.38	4856	14870	5	0.44	
	0.44	4019.49	4856	14870	5	0.41	
	0.41	4233.69	4856	14870	5	0.39	
	0.36	4810.02	4856	14870	5	0.34	
	0.32	5423.82	4856	14870	5	0.30	
	0.29	6140.01	4856	14870	5	0.27	
	0.25	7020.89	4856	14870	5	0.24	
	6.9	253.24	7343	2280	4	12.03	H_1084GH71C4
	6.6	266.13	7343	2396	4	11.45	
	6.0	292.42	7343	2633	4	10.42	
	5.2	338.29	7343	3046	4	9.01	
	5.1	345.81	7343	3114	4	8.81	
	4.8	363.19	7343	3270	4	8.39	
	4.6	378.53	7343	3408	4	8.05	
	4.1	423.63	7343	3814	4	7.19	
	4.0	438.48	7343	3948	4	6.95	
	3.8	460.82	7343	4149	4	6.61	
	3.6	485.47	7343	4371	4	6.28	
	3.2	543.23	7343	4891	4	5.61	
	3.1	564.07	7343	5079	4	5.40	
	2.8	625.78	7343	5634	4	4.87	
	2.8	635.01	7343	5717	4	4.80	
	2.4	739.98	7343	6662	4	4.12	
	2.3	757.74	7343	6822	4	4.02	
	2.1	824.99	7343	7428	4	3.69	
	2.0	880.77	7343	7930	4	3.46	
	1.9	922.53	7343	8306	4	3.30	

(B) - See footnotes page on inside back cover

ILH integral gearmotors

1750 RPM - 60 Hz

Input power (Hp)	Speed (RPM)	Ratio	OHL (LBF) (B)	Output torque (in-lb)	Gear stage	Service factor (SF)	Catalog number
0.25 (cont.)	1.8	950.04	7343	8554	4	3.21	H_1084GH71C4
	1.7	1062.79	7343	9569	4	2.87	
	1.6	1081.38	7343	9736	4	2.82	
	1.5	1210.36	7343	10898	4	2.52	
	1.4	1223.88	7343	11019	4	2.49	
	1.3	1375.86	7343	12388	4	2.21	
	1.2	1436.12	7343	12930	4	2.12	
	1.1	1597.84	7343	14386	4	1.91	
	1.1	1625.92	7343	14639	4	1.87	
	1.0	1738.10	7343	15649	4	1.75	
	0.97	1802.34	7343	16228	4	1.69	
	0.88	1993.11	7343	17945	4	1.53	
	0.84	2092.10	7343	18836	4	1.46	
	0.81	2160.67	7343	19454	4	1.41	
	0.75	2326.24	7343	20945	4	1.31	
	0.66	2657.65	7343	23928	4	1.15	
	0.60	2902.52	7343	26133	4	1.05	
	0.54	3217.45	7343	27438	4	0.95	
	0.57	3071.20	7343	27438	5	0.99	H_1085GH71C4
	0.50	3487.94	7343	27438	5	0.87	
	0.44	4002.19	7343	27438	5	0.76	
	0.41	4308.47	7343	27438	5	0.71	
	0.38	4604.08	7343	27438	5	0.66	
	0.36	4826.47	7343	27438	5	0.63	
	0.34	5159.45	7343	27438	5	0.59	
	0.29	5965.09	7343	27438	5	0.51	
	0.26	6759.36	7343	27438	5	0.45	
	0.25	7086.24	7343	27438	5	0.43	
	5.4	320.74	8992	2888	4	15.63	H_1284GH71C4
	5.3	327.50	8992	2949	4	15.31	
	4.7	375.07	8992	3377	4	13.37	
	4.6	381.71	8992	3437	4	13.13	
	4.2	418.40	8992	3767	4	11.98	
	4.1	426.18	8992	3837	4	11.76	
	3.7	473.33	8992	4262	4	10.59	
	3.6	493.16	8992	4440	4	10.17	
	3.3	530.31	8992	4775	4	9.45	
	3.2	550.62	8992	4958	4	9.11	
	2.9	614.50	8992	5533	4	8.16	
	2.8	631.72	8992	5688	4	7.94	
	2.5	714.49	8992	6433	4	7.02	
	2.2	798.59	8992	7190	4	6.28	
	2.1	818.73	8992	7371	4	6.12	
	1.9	919.88	8992	8282	4	5.45	
	1.9	944.83	8992	8507	4	5.31	
	1.7	1055.74	8992	9505	4	4.75	
	1.6	1101.80	8992	9920	4	4.55	
	1.5	1191.22	8992	10725	4	4.21	
	1.4	1240.81	8992	11172	4	4.04	
	1.2	1407.67	8992	12674	4	3.56	
	1.1	1531.77	8992	13791	4	3.27	
	1.1	1593.66	8992	14349	4	3.15	
	1.0	1729.93	8992	15576	4	2.90	
	0.95	1847.48	8992	16634	4	2.71	
	0.88	1979.04	8992	17818	4	2.53	
	0.84	2072.32	8992	18658	4	2.42	
	0.78	2249.64	8992	20255	4	2.23	
	0.70	2495.13	8992	22465	4	2.01	
	0.67	2614.77	8992	23542	5	1.92	H_1285GH71C4
	0.57	3053.15	8992	27489	5	1.64	
	0.52	3343.62	8992	30105	5	1.50	
	0.51	3437.20	8992	30947	5	1.46	
	0.45	3924.55	8992	35335	5	1.28	

(B) - See footnotes page on inside back cover

ILH integral gearmotors

1750 RPM - 60 Hz

Input power (Hp)	Speed (RPM)	Ratio	OHL (LBF) (B)	Output torque (in-lb)	Gear stage	Service factor (SF)	Catalog number
	0.38	4553.08	8992	40994	5	1.10	
	0.34	5138.83	8992	45140	5	0.98	
	0.30	5914.78	8992	45140	5	0.85	**H_1285GH71C4**
	0.26	6761.17	8992	45140	5	0.74	
	0.25	7081.04	8992	45140	5	0.71	
	5.1	343.61	11827	3094	4	22.89	
	4.6	381.21	12725	3432	4	20.63	
	4.1	425.63	12725	3832	4	18.48	
	3.9	446.17	12725	4017	4	17.63	
	3.6	483.21	12725	4351	4	16.28	
	3.4	523.09	12725	4710	4	15.03	
	3.1	562.57	12725	5065	4	13.98	
	2.9	608.21	12725	5476	4	12.93	
	2.7	638.35	12725	5747	4	12.32	
	2.5	693.49	12725	6244	4	11.34	
	2.4	730.35	12725	6576	4	10.77	
	2.1	838.20	12725	7547	4	9.38	**H_1484GH71C4**
	2.0	889.38	12725	8008	4	8.84	
	1.8	951.58	12725	8568	4	8.26	
	1.7	1039.62	12725	9360	4	7.56	
	1.6	1095.38	12725	9862	4	7.18	
	1.6	1106.44	12725	9962	4	7.11	
	1.5	1202.94	12725	10831	4	6.54	
	1.4	1255.67	12725	11306	4	6.26	
	1.3	1397.42	12725	12582	4	5.63	
	1.1	1576.31	12725	14192	4	4.99	
	1.1	1615.18	12725	14542	4	4.87	
	0.95	1841.48	12725	16580	4	4.27	
	0.94	1869.52	12725	16832	4	4.21	
	0.84	2081.96	12725	18745	4	3.78	
	0.78	2246.45	12725	20226	4	3.50	
.25	0.72	2436.35	12725	21936	4	3.23	**H_1484GH71C4**
(cont.)	0.70	2509.13	12725	22591	4	3.13	
	0.66	2657.82	12725	23930	4	2.96	
	0.60	2927.02	12725	26354	4	2.69	
	0.58	3037.51	12725	27348	4	2.59	
	0.52	3368.98	12725	30333	4	2.33	
	0.51	3450.55	12725	31067	5	2.28	
	0.49	3539.62	12725	31869	5	2.22	
	0.44	3938.75	12725	35463	5	2.00	
	0.44	4012.71	12725	36129	5	1.96	
	0.39	4469.99	12725	40246	5	1.76	
	0.37	4701.81	12725	42333	5	1.67	**H_1485GH71C4**
	0.34	5090.25	12725	45830	5	1.55	
	0.30	5795.44	12725	52180	5	1.36	
	0.27	6552.42	12725	58995	5	1.20	
	0.25	6951.91	12725	62592	5	1.13	
	5.3	332.11	17770	2990	4	41.44	
	4.7	370.81	17770	3339	4	37.12	
	4.4	401.98	17770	3619	4	34.24	
	4.1	426.39	17770	3839	4	32.28	
	3.8	462.23	17770	4162	4	29.77	
	3.6	487.42	17770	4388	4	28.24	
	3.3	528.39	17770	4757	4	26.05	
	3.1	564.83	17770	5086	4	24.37	
	2.8	615.41	17770	5541	4	22.36	
	2.5	694.17	17770	6250	4	19.83	**H_1684GH71C4**
	2.2	782.02	17770	7041	4	17.60	
	2.0	893.72	17770	8047	4	15.40	
	1.7	1037.72	17770	9343	4	13.26	
	1.5	1167.03	17770	10507	4	11.79	
	1.3	1328.86	17770	11964	4	10.36	
	1.1	1545.11	17770	13912	4	8.91	
	1.0	1711.49	17770	15409	4	8.04	
	0.90	1939.74	17770	17465	4	7.10	

(B) - See footnotes page on inside back cover

ILH integral gearmotors

1750 RPM - 60 Hz

Input power (Hp)	Speed (RPM)	Ratio	OHL (LBF) (B)	Output torque (in-lb)	Gear stage	Service factor (SF)	Catalog number
0.33	0.80	2193.14	17770	19746	4	6.28	H_1684GH71C4
	0.69	2551.01	17770	22968	4	5.40	
	0.70	2517.61	17770	22667	5	5.47	H_1685GH71C4
	0.60	2908.07	17770	25976	5	4.73	
	0.53	3307.14	17770	29687	5	4.16	
	0.47	3730.40	17770	33587	5	3.69	
	0.41	4263.25	17770	38384	5	3.23	
	0.35	4952.83	17770	44593	5	2.78	
	0.31	5584.97	17770	50285	5	2.46	
	0.27	6466.19	17770	58219	5	2.13	
	0.24	7374.54	17770	66397	5	1.87	
	1101	1.59	–	19	1	6.12	H_381GH71D4
	946	1.85	–	22	1	6.12	
	854	2.05	–	24	1	6.12	
	781	2.24	50	27	1	6.12	
	700	2.50	102	30	1	6.12	
	641	2.73	102	32	1	6.03	
	583	3.00	211	36	1	5.79	
	529	3.31	269	39	1	5.52	
	477	3.67	258	44	1	5.24	
	422	4.15	371	49	1	4.88	
	382	4.58	371	54	1	4.64	
	338	5.18	543	62	1	4.27	
	296	5.92	543	70	1	3.82	
	260	6.73	583	80	1	3.42	
	243	7.20	583	86	1	3.24	
	211	8.30	834	99	1	2.88	
	188	9.33	834	111	1	2.55	
	367	4.77	518	57	2	6.09	H_382GH71D4
	315	5.55	518	66	2	6.11	
	284	6.16	518	73	2	6.13	
	261	6.71	518	80	2	6.09	
	233	7.50	279	89	2	6.13	
	233	7.52	279	89	2	6.14	
	200	8.75	279	104	2	6.11	
	180	9.70	279	115	2	6.13	
	166	10.57	279	126	2	6.10	
	148	11.82	416	140	2	6.14	
	135	12.92	416	154	2	6.10	
	123	14.18	416	169	2	6.10	
	112	15.64	416	186	2	6.00	
	101	17.33	416	206	2	5.57	
	89	19.64	546	233	2	5.08	
	81	21.67	546	258	2	4.69	
	71	24.50	546	291	2	4.26	
	63	27.97	881	332	2	3.83	
	55	31.80	881	378	2	3.44	
	51	34.04	881	405	2	3.24	
	45	39.24	881	466	2	2.87	
	40	44.12	1117	524	2	2.59	
	57	30.74	881	365	3	5.22	H_383GH71D4
	52	33.82	881	402	3	4.84	
	45	39.28	881	467	3	4.17	
	41	42.53	881	505	3	3.86	
	36	48.10	1117	572	3	3.40	
	33	52.86	1117	628	3	3.10	
	30	58.30	1117	693	3	2.81	
	27	64.58	1117	768	3	2.54	
	24	71.91	1117	855	3	2.28	
	21	82.52	1117	981	3	1.98	
	19	91.34	1117	1086	3	1.79	
	17	103.89	1117	1235	3	1.58	
	15	118.55	1117	1409	3	1.38	
	13	133.57	1117	1587	3	1.23	
	12	149.26	1117	1774	3	1.10	

(B) - See footnotes page on inside back cover

ILH integral gearmotors

1750 RPM - 60 Hz

Input power (Hp)	Speed (RPM)	Ratio	OHL (LBF) (B)	Output torque (in-lb)	Gear stage	Service factor (SF)	Catalog number
0.33 (cont)	8.9	196.31	1117	1768	4	0.83	**H_384GH71D4**
	726	2.41	195	29	1	6.12	**H_481GH71D4**
	648	2.70	161	32	1	6.12	**H_481GH71D4**
	593	2.95	124	35	1	6.12	
	540	3.24	106	39	1	6.12	
	492	3.56	99	42	1	6.12	
	452	3.87	99	46	1	6.12	
	416	4.21	191	50	1	6.12	
	379	4.62	191	55	1	5.94	
	344	5.08	303	60	1	5.52	
	299	5.85	303	70	1	4.94	
	276	6.33	627	75	1	4.64	
	250	7.00	627	83	1	4.24	
	214	8.17	711	97	1	3.73	
	193	9.09	711	108	1	3.39	
	175	10.00	826	119	1	3.12	
	155	11.30	826	134	1	2.82	
	258	6.79	904	81	2	6.09	**H_482GH71D4**
	160	10.93	937	130	2	6.11	
	143	12.25	937	146	2	6.10	
	131	13.38	937	159	2	6.12	
	119	14.68	937	175	2	6.14	
	108	16.17	937	192	2	6.12	
	100	17.55	1142	209	2	6.10	
	91	19.13	1142	227	2	6.13	
	84	20.95	1142	249	2	5.95	
	76	23.07	1142	274	2	5.53	
	66	26.53	1142	315	2	4.94	
	61	28.74	1517	342	2	4.62	
	55	31.77	1517	378	2	4.25	
	47	37.06	1517	440	2	3.74	
	42	41.26	1517	490	2	3.41	
	39	45.38	1884	539	2	3.13	
	34	51.28	1884	610	2	2.81	
	49	35.59	1517	423	3	6.12	**H_483GH71D4**
	42	41.38	1517	492	3	6.12	
	38	45.91	1884	546	3	6.11	
	35	50.00	1884	594	3	6.12	
	31	55.92	1884	665	3	5.99	
	29	61.14	1884	727	3	5.48	
	26	67.10	1884	798	3	5.00	
	24	73.99	1986	879	3	4.53	
	21	82.02	1986	975	3	4.09	
	19	92.91	1986	1104	3	3.61	
	17	102.52	1986	1218	3	3.27	
	15	115.91	1986	1378	3	2.89	
	13	132.34	1986	1573	3	2.53	
	12	150.48	1986	1788	3	2.23	
	11	161.05	1986	1914	3	2.08	
	9	185.66	1986	2206	3	1.80	
	8	208.77	1986	2481	3	1.61	
	8.2	214.43	1986	2548	4	1.56	**H_484GH71D4**
	7.8	223.91	1986	2661	4	1.50	
	7.3	239.26	1986	2844	4	1.40	
	7.1	246.06	1986	2924	4	1.36	
	6.8	256.07	1986	3043	4	1.31	
	6.5	271.49	1986	3227	4	1.23	
	6.0	289.78	1986	3444	4	1.16	
	5.7	308.48	1986	3666	4	1.09	
	5.3	330.15	1986	3924	4	1.02	
	4.9	360.75	1986	3248	4	0.93	
	4.3	410.81	1986	3699	4	0.82	

ILH integral gearmotors

1750 RPM - 60 Hz

Input power (Hp)	Speed (RPM)	Ratio	OHL (LBF) (B)	Output torque (in-lb)	Gear stage	Service factor (SF)	Catalog number
0.33 (cont.)	132	13.29	1275	158	2	6.12	H_582GH71D4
	116	15.09	1400	179	2	6.12	
	109	16.13	1450	192	2	6.12	
	96	18.3	1600	217	2	6.12	
	89	19.74	1650	235	2	6.12	
	82	21.37	1750	254	2	6.12	
	75	23.24	1850	276	2	6.12	
	68	25.75	1950	306	2	6.12	
	62	28.29	2100	336	2	6.12	
	55	31.55	2200	375	2	6.12	
	51	34.57	2200	411	2	6.12	
	46	38.14	2200	453	2	6.12	
	40	43.61	2200	518	2	6.12	
	36	49.26	2200	585	2	6.12	H_582GH71D4
	32	54.69	2200	650	2	6.12	
	41	42.99	2200	511	3	6.12	H_583GH71D4
	37	47.77	2200	568	3	6.12	
	32	54.94	2200	653	3	6.12	
	30	59.09	2200	702	3	6.12	
	25	68.85	2200	818	3	6.12	
	23	74.64	2200	887	3	6.09	
	22	81.21	2200	965	3	5.61	
	20	88.72	2200	1054	3	5.12	
	18	97.38	2200	1157	3	4.67	
	16	107.49	2200	1277	3	4.21	
	14	121.27	2200	1441	3	3.76	
	13	133.36	2200	1585	3	3.39	
	12	147.66	2200	1755	3	3.09	
	10	173.17	2200	2058	3	2.64	
	9	191.09	2200	2271	3	2.36	
	8	212.58	2200	2526	3	2.15	
	7	238.86	2200	2839	3	1.91	
	566	3.09	52	37	1	6.12	H_681GH71D4
	507	3.45	68	41	1	6.12	
	468	3.74	73	44	1	6.12	
	413	4.24	160	50	1	6.12	
	384	4.56	160	54	1	6.12	
	355	4.93	453	59	1	6.12	
	327	5.36	453	64	1	6.12	
	295	5.92	453	70	1	8.84	
	273	6.42	657	76	1	5.60	
	242	7.23	657	86	1	5.24	
	221	7.92	1078	94	1	5.00	
	198	8.82	1078	105	1	4.69	
	174	10.08	1366	120	1	4.33	
	157	11.18	1366	133	1	4.03	
	141	12.40	1366	147	1	3.75	
	119	14.74	962	175	2	6.12	H_682GH71D4
	106	16.45	962	196	2	6.10	
	98	17.82	1306	212	2	6.11	
	87	20.20	1306	240	2	6.12	
	80	21.76	1306	259	2	6.11	
	74	23.53	1306	280	2	6.11	
	68	25.55	1306	304	2	6.11	
	62	28.25	1940	336	2	6.07	
	57	30.60	1940	364	2	5.69	
	51	34.49	1940	410	2	5.16	
	46	37.76	1940	449	2	4.78	
	42	42.06	1940	500	2	4.36	
	36	48.09	2765	572	2	3.88	

(B) - See footnotes page on inside back cover

ILH integral gearmotors

1750 RPM - 60 Hz

Input power (Hp)	Speed (RPM)	Ratio	OHL (LBF) (B)	Output torque (in-lb)	Gear stage	Service factor (SF)	Catalog number
0.33 (cont.)	29	59.91	2765	712	3	6.12	H_683GH71D4
	26	67.14	2765	798	3	6.12	
	24	73.30	3091	871	3	6.12	
	22	80.46	3091	956	3	6.12	
	20	88.59	3091	1053	3	6.12	
	18	96.16	3091	1143	3	6.12	
	17	104.80	3091	1246	3	5.68	
	15	114.78	3170	1364	3	5.19	
	14	126.41	3170	1502	3	4.71	
	12	145.38	3170	1728	3	4.10	
	11	157.50	3170	1872	3	3.78	
	10	174.08	3170	2069	3	3.42	
	9	203.09	3170	2414	3	2.93	
	8	226.07	3170	2687	3	2.64	
	7	248.68	3170	2956	3	2.40	
	6	281.01	3170	3340	3	2.12	
	5.4	325.65	3170	3870	4	1.83	H_684GH71D4
	4.8	363.45	3170	4319	4	1.64	
	4.7	375.72	3170	4465	4	1.59	
	4.2	421.24	3170	5006	4	1.41	
	4.0	436.14	3170	5183	4	1.37	
	3.9	454.92	3170	5407	4	1.31	
	3.6	481.21	3170	5719	4	1.24	
	3.4	522.24	3170	6207	4	1.14	
	3.2	554.44	3170	6589	4	1.07	
	3.0	576.20	3170	6848	4	1.03	
	2.7	653.63	3170	5885	4	0.91	
	2.6	672.23	3170	6052	4	0.89	H_684GH71D4
	2.4	722.43	3170	6504	4	0.82	
	2.3	754.56	3091	6794	4	0.79	
	23	74.88	4856	890	3	6.12	H_883GH71D4
	21	83.58	4856	993	3	6.12	
	19	90.53	4856	1076	3	6.12	
	17	102.61	4856	1219	3	6.12	
	16	110.54	4856	1314	3	6.12	
	15	119.52	4856	1420	3	6.02	
	13	129.79	4856	1542	3	5.64	
	12	143.50	4856	1705	3	5.21	
	11	155.46	4856	1848	3	4.87	
	10	175.18	4856	2082	3	4.41	
	9	191.80	4856	2279	3	4.09	
	8	213.64	4856	2539	3	3.73	
	7	244.29	4856	2903	3	3.31	
	6	270.90	4856	3220	3	3.02	
	6	300.41	4856	3570	3	2.76	

(B) - See footnotes page on inside back cover

ILH integral gearmotors

1750 RPM - 60 Hz

Input power (Hp)	Speed (RPM)	Ratio	OHL (LBF) (B)	Output torque (in-lb)	Gear stage	Service factor (SF)	Catalog number
0.33 (cont.)	5.3	332.46	4856	3951	4	3.76	H_884GH71D4
	5.0	350.43	4856	4165	4	3.57	
	4.9	358.15	4856	4257	4	3.49	
	4.4	397.10	4856	4719	4	3.15	
	4.2	418.25	4856	4971	4	2.99	
	3.8	458.61	4856	5450	4	2.73	
	3.7	472.99	4856	5621	4	2.65	
	3.4	521.26	4856	6195	4	2.40	
	3.3	529.60	4856	6294	4	2.36	
	3.0	585.06	4856	6953	4	2.14	
	2.9	601.63	4856	7150	4	2.08	
	2.7	646.66	4856	7685	4	1.93	
	2.6	682.81	4856	8115	4	1.83	
	2.3	759.27	4856	9024	4	1.65	
	2.3	773.78	4856	9196	4	1.62	
	2.2	799.16	4856	9498	4	1.57	
	2.0	886.21	4856	10532	4	1.41	
	1.9	932.72	4856	11085	4	1.34	
	1.8	987.02	4856	11730	4	1.27	
	1.7	1004.50	4856	11938	4	1.25	
	1.7	1028.46	4856	12223	4	1.22	
	1.5	1140.49	4856	13554	4	1.10	
	1.4	1226.26	4856	14574	4	1.02	
	1.3	1304.42	4856	11744	4	0.96	
	1.3	1387.89	4856	12496	4	0.90	
	1.2	1495.48	4856	13465	4	0.84	
	1.2	1526.08	4856	13740	4	0.82	
	6.9	253.24	7343	3010	4	9.12	H_1084GH71D4
	6.6	266.13	7343	3163	4	8.67	
	6.0	292.42	7343	3475	4	7.90	
	5.2	338.29	7343	4021	4	6.82	
	5.1	345.81	7343	4110	4	6.68	
	4.8	363.19	7343	4316	4	6.36	
	4.6	378.53	7343	4499	4	6.10	
	4.1	423.63	7343	5035	4	5.45	
	4.0	438.48	7343	5211	4	5.27	
	3.8	460.82	7343	5477	4	5.01	
	3.6	485.47	7343	5770	4	4.76	
	3.2	543.23	7343	6456	4	4.25	
	3.1	564.07	7343	6704	4	4.09	H_1084GH71D4
	2.8	625.78	7343	7437	4	3.69	
	2.8	635.01	7343	7547	4	3.64	
	2.4	739.98	7343	8794	4	3.12	
	2.3	757.74	7343	9005	4	3.05	
	2.1	824.99	7343	9805	4	2.80	
	2.0	880.77	7343	10468	4	2.62	
	1.9	922.53	7343	10964	4	2.50	
	1.8	950.04	7343	11291	4	2.43	
	1.7	1062.79	7343	12631	4	2.17	
	1.6	1081.38	7343	12852	4	2.13	
	1.5	1210.36	7343	14385	4	1.91	
	1.4	1223.88	7343	14545	4	1.89	H_1084GH71D4
	1.3	1375.86	7343	16352	4	1.68	
	1.2	1436.12	7343	17068	4	1.61	
	1.1	1597.84	7343	18990	4	1.44	
	1.1	1625.92	7343	19324	4	1.42	
	1.0	1738.10	7343	20657	4	1.33	
	1.0	1802.34	7343	21420	4	1.28	
	0.88	1993.11	7343	23688	4	1.16	
	0.84	2092.10	7343	24864	4	1.10	
	0.81	2160.67	7343	25679	4	1.07	
	0.75	2326.24	7343	20945	4	0.99	
	0.66	2657.65	7343	23928	4	0.87	
	0.60	2902.52	7343	26133	4	0.80	

(B) - See footnotes page on inside back cover

ILH integral gearmotors

1750 RPM - 60 Hz

Input power (Hp)	Speed (RPM)	Ratio	OHL (LBF) (B)	Output torque (in-lb)	Gear stage	Service factor (SF)	Catalog number
0.33 (cont.)	5.5	320.74	8992	3812	4	11.84	H_1284GH71D4
	5.3	327.50	8992	3892	4	11.60	
	4.7	375.07	8992	4458	4	10.13	
	4.6	381.71	8992	4536	4	9.95	
	4.2	418.40	8992	4973	4	9.08	
	4.1	426.18	8992	5065	4	8.91	
	3.7	473.33	8992	5625	4	8.02	
	3.6	493.16	8992	5861	4	7.70	
	3.3	530.31	8992	6303	4	7.16	
	3.2	550.62	8992	6544	4	6.90	
	2.8	614.50	8992	7303	4	6.18	
	2.8	631.72	8992	7508	4	6.01	
	2.5	714.49	8992	8491	4	5.32	
	2.2	798.59	8992	9491	4	4.76	
	2.1	818.73	8992	9730	4	4.64	
	1.9	919.88	8992	10933	4	4.13	
	1.9	944.83	8992	11229	4	4.02	
	1.7	1055.74	8992	12547	4	3.60	
	1.6	1101.80	8992	13095	4	3.45	
	1.5	1191.22	8992	14157	4	3.19	
	1.4	1240.81	8992	14747	4	3.06	
	1.2	1407.67	8992	16730	4	2.70	
	1.1	1531.77	8992	18205	4	2.48	
	1.1	1593.66	8992	18940	4	2.38	
	1.0	1729.93	8992	20560	4	2.20	
	0.95	1847.48	8992	21957	4	2.06	
	0.88	1979.04	8992	23520	4	1.92	
	0.84	2072.32	8992	24629	4	1.83	
	0.78	2249.64	8992	26736	4	1.69	
	0.70	2495.13	8992	29654	4	1.52	
	0.67	2614.77	8992	31076	5	1.45	H_1285GH71D4
	0.57	3053.15	8992	36286	5	1.24	
	0.52	3343.62	8992	39738	5	1.14	
	0.51	3437.20	8992	40850	5	1.11	
	0.45	3924.55	8992	35335	5	0.97	
	0.38	4553.08	8992	40994	5	0.83	
	5.1	343.61	11827	4084	4	17.34	H_1484GH71D4
	4.6	381.21	12725	4531	4	15.63	
	4.1	425.63	12725	5058	4	14.00	
	3.9	446.17	12725	5303	4	13.35	
	3.6	483.21	12725	5743	4	12.33	
	3.4	523.09	12725	6217	4	11.39	
	3.1	562.57	12725	6686	4	10.59	H_1484GH71D4
	2.9	608.21	12725	7228	4	9.80	
	2.7	638.35	12725	7587	4	9.33	
	2.5	693.49	12725	8242	4	8.59	
	2.4	730.35	12725	8680	4	8.16	
	2.1	838.20	12725	9962	4	7.11	
	2.0	889.38	12725	10570	4	6.70	
	1.8	951.58	12725	11309	4	6.26	
	1.7	1039.62	12725	12356	4	5.73	
	1.6	1095.38	12725	13018	4	5.44	
	1.6	1106.44	12725	13150	4	5.38	
	1.5	1202.94	12725	14297	4	4.95	
	1.4	1255.67	12725	14923	4	4.74	H_1484GH71D4
	1.3	1397.42	12725	16608	4	4.26	
	1.1	1576.31	12725	18734	4	3.78	
	1.1	1615.18	12725	19196	4	3.69	
	1.0	1841.48	12725	21885	4	3.24	
	0.94	1869.52	12725	22219	4	3.19	
	0.84	2081.96	12725	24744	4	2.86	
	0.78	2246.45	12725	26698	4	2.65	
	0.72	2436.35	12725	28955	4	2.45	
	0.70	2509.13	12725	29820	4	2.37	
	0.66	2657.82	12725	31587	4	2.24	
	0.60	2927.02	12725	34787	4	2.04	
	0.58	3037.51	12725	36100	4	1.96	
	0.52	3368.98	12725	40039	4	1.77	

(B) - See footnotes page on inside back cover

ILH integral gearmotors

1750 RPM - 60 Hz

Input power (Hp)	Speed (RPM)	Ratio	OHL (LBF) (B)	Output torque (in-lb)	Gear stage	Service factor (SF)	Catalog number
0.33 (cont.)	0.51	3450.55	12725	41009	5	1.73	H_1485GH71D4
	0.49	3539.62	12725	42067	5	1.68	
	0.44	3938.75	12725	46811	5	1.51	
	0.44	4012.71	12725	47690	5	1.48	
	0.39	4469.99	12725	53124	5	1.33	
	0.37	4701.81	12725	55880	5	1.27	
	0.34	5090.25	12725	60496	5	1.17	
	0.30	5795.44	12725	68877	5	1.03	
	0.27	6552.42	12725	58995	5	0.91	
	0.25	6951.91	12725	62592	5	0.86	
	5.3	332.11	17770	3947	4	31.39	H_1684GH71D4
	4.7	370.81	17770	4407	4	28.12	
	4.4	401.98	17770	4777	4	25.94	
	4.1	426.39	17770	5067	4	24.45	
	3.8	462.23	17770	5493	4	22.56	
	3.6	487.42	17770	5793	4	21.39	
	3.3	528.39	17770	6280	4	19.73	
	3.1	564.83	17770	6713	4	18.46	
	2.8	615.41	17770	7314	4	16.94	
	2.5	694.17	17770	8250	4	15.02	
	2.2	782.02	17770	9294	4	13.33	
	2.0	893.72	17770	10622	4	11.67	
	1.7	1037.72	17770	12333	4	10.05	
	1.5	1167.03	17770	13870	4	8.93	
	1.3	1328.86	17770	15793	4	7.85	
	1.1	1545.11	17770	18363	4	6.75	
	1.0	1711.49	17770	20341	4	6.09	
	0.90	1939.74	17770	23053	4	5.38	
	0.80	2193.14	17770	26065	4	4.75	
	0.69	2551.01	17770	30318	4	4.09	
	0.70	2517.61	17770	29921	5	4.14	H_1685GH71D4
	0.60	2908.07	17770	34289	5	3.58	
	0.53	3307.14	17770	39187	5	3.15	
	0.47	3730.40	17770	44335	5	2.79	
	0.41	4263.25	17770	50668	5	2.45	
	0.35	4952.83	17770	58863	5	2.11	
	0.31	5584.97	17770	66376	5	1.87	
	0.27	6466.19	17770	76849	5	1.61	
	0.24	7374.54	17770	87644	5	1.41	
0.5	1101	1.59	–	29	1	4.04	H_381GH71E4
	946	1.85	–	33	1	4.04	
	854	2.05	–	37	1	4.04	
	781	2.24	50	40	1	4.04	
	700	2.50	102	45	1	4.04	
	641	2.73	102	49	1	3.98	
	583	3.00	211	54	1	3.82	
	529	3.31	269	60	1	3.64	
	477	3.67	258	66	1	3.46	
	422	4.15	371	75	1	3.22	
	382	4.58	371	82	1	3.06	
	338	5.18	543	93	1	2.82	
	296	5.92	543	107	1	2.52	
	260	6.73	583	121	1	2.26	
	243	7.20	583	130	1	2.14	H_381GH71E4
	211	8.30	834	149	1	1.90	
	188	9.33	834	168	1	1.68	

(B) - See footnotes page on inside back cover

ILH integral gearmotors

1750 RPM - 60 Hz

Input power (Hp)	Speed (RPM)	Ratio	OHL (LBF) (B)	Output torque (in-lb)	Gear stage	Service factor (SF)	Catalog number
0.5 (cont.)	367	4.77	518	86	2	4.03	H_382GH71E4
	315	5.55	518	100	2	4.04	
	284	6.16	518	111	2	4.03	
	261	6.71	518	121	2	4.03	
	233	7.50	279	135	2	4.04	
	233	7.52	279	135	2	4.05	
	200	8.75	279	157	2	4.02	
	180	9.70	279	175	2	4.03	
	166	10.57	279	190	2	4.04	
	148	11.82	416	213	2	4.03	
	135	12.92	416	233	2	4.03	
	123	14.18	416	255	2	4.04	
	112	15.64	416	282	2	3.96	
	101	17.33	416	312	2	3.68	
	89	19.64	546	354	2	3.34	
	81	21.67	546	390	2	3.10	
	71	24.50	546	441	2	2.81	
	63	27.97	881	504	2	2.52	
	55	31.80	881	573	2	2.27	
	51	34.04	881	613	2	2.14	
	45	39.24	881	707	2	1.89	
	40	44.12	1117	794	2	1.71	
	57	30.74	881	554	3	3.44	H_383GH71E4
	52	33.82	881	609	3	3.20	
	45	39.28	881	707	3	2.75	
	41	42.53	881	766	3	2.54	
	36	48.10	1117	866	3	2.25	
	33	52.86	1117	952	3	2.05	
	30	58.30	1117	1050	3	1.85	
	27	64.58	1117	1163	3	1.67	
	24	71.91	1117	1295	3	1.50	
	21	82.52	1117	1486	3	1.31	
	19	91.34	1117	1645	3	1.18	
	17	103.89	1117	1871	3	1.04	
	726	2.41	195	43	1	4.04	H_481GH71E4
	648	2.70	161	49	1	4.04	
	593	2.95	124	53	1	4.04	
	540	3.24	106	58	1	4.04	
	492	3.56	99	64	1	4.04	
	452	3.87	99	70	1	4.04	
	416	4.21	191	76	1	4.04	
	379	4.62	191	83	1	3.92	
	344	5.08	303	91	1	3.64	
	299	5.85	303	105	1	3.26	
	276	6.33	627	114	1	3.06	
	250	7.00	627	126	1	2.80	
	214	8.17	711	147	1	2.46	
	193	9.09	711	164	1	2.24	
	175	10.00	826	180	1	2.06	
	155	11.30	826	203	1	1.86	
	258	6.79	904	122	2	4.05	H_482GH71E4
	160	10.93	937	197	2	4.04	
	143	12.25	937	221	2	4.03	
	131	13.38	937	241	2	4.04	
	119	14.68	937	264	2	4.04	
	108	16.17	937	291	2	4.04	
	100	17.55	1142	316	2	4.04	H_482GH71E4
	91	19.13	1142	344	2	4.04	
	84	20.95	1142	377	2	3.93	
	76	23.07	1142	415	2	3.65	
	66	26.53	1142	478	2	3.26	
	61	28.74	1517	518	2	3.05	
	55	31.77	1517	572	2	2.81	
	47	37.06	1517	667	2	2.47	
	42	41.26	1517	743	2	2.25	
	39	45.38	1884	817	2	2.07	
	34	51.28	1884	923	2	1.86	

(B) - See footnotes page on inside back cover

ILH integral gearmotors

1750 RPM - 60 Hz

Input power (Hp)	Speed (RPM)	Ratio	OHL (LBF) (B)	Output torque (in-lb)	Gear stage	Service factor (SF)	Catalog number
	49	35.59	1517	641	3	4.04	
	42	41.38	1517	745	3	4.04	**H_483GH71E4**
	38	45.91	1884	827	3	4.04	
	35	50.00	1884	900	3	4.04	
	31	55.92	1884	1007	3	3.96	
	29	61.14	1884	1101	3	3.62	
	26	67.10	1884	1208	3	3.30	
	24	73.99	1986	1332	3	2.99	
	21	82.02	1986	1477	3	2.70	
	19	92.91	1986	1673	3	2.38	**H_483GH71E4**
	17	102.52	1986	1846	3	2.16	
	15	115.91	1986	2087	3	1.91	
	13	132.34	1986	2383	3	1.67	
	12	150.48	1986	2710	3	1.47	
	11	161.05	1986	2900	3	1.37	
	9	185.66	1986	3343	3	1.19	
	8	208.77	1986	3759	3	1.06	
	8.2	214.43	1986	3861	4	1.03	
	7.8	223.91	1986	3983	4	0.99	
	7.3	239.26	1986	3983	4	0.92	
	7.1	246.06	1986	3983	4	0.90	
	6.8	256.07	1986	3983	4	0.86	**H_484GH71E4**
	6.5	271.49	1986	3983	4	0.81	
	6.0	289.78	1986	3983	4	0.76	
	5.7	308.48	1986	3983	4	0.72	
	5.3	330.15	1986	3983	4	0.67	
	132	13.29	1275	239	2	4.04	
	116	15.09	1400	272	2	4.04	
0.5 (cont.)	109	16.13	1450	290	2	4.04	
	96	18.3	1600	330	2	4.04	
	89	19.74	1650	355	2	4.04	
	82	21.37	1750	385	2	4.04	
	75	23.24	1850	418	2	4.04	
	68	25.75	1950	464	2	4.04	**H_582GH71E4**
	62	28.29	2100	509	2	4.04	
	55	31.55	2200	568	2	4.04	
	51	34.57	2200	623	2	4.04	
	46	38.14	2200	687	2	4.04	
	40	43.61	2200	785	2	4.04	
	36	49.26	2200	887	2	4.04	
	32	54.69	2200	985	2	4.04	
	41	42.99	2200	774	3	4.04	
	37	47.77	2200	860	3	4.04	
	32	54.94	2200	989	3	4.04	
	30	59.09	2200	1064	3	4.04	
	25	68.85	2200	1240	3	4.04	
	23	74.64	2200	1344	3	4.02	
	22	81.21	2200	1462	3	3.7	
	20	88.72	2200	1598	3	3.38	
	18	97.38	2200	1754	3	3.08	**H_583GH71E4**
	16	107.49	2200	1936	3	2.78	
	14	121.27	2200	2184	3	2.48	
	13	133.36	2200	2401	3	2.24	
	12	147.66	2200	2659	3	2.04	
	10	173.17	2200	3118	3	1.74	
	9	191.09	2200	3441	3	1.56	
	8	212.58	2200	3828	3	1.42	
	7	238.86	2200	4301	3	1.26	

(B) - See footnotes page on inside back cover

ILH integral gearmotors

1750 RPM - 60 Hz

Input power (Hp)	Speed (RPM)	Ratio	OHL (LBF) (B)	Output torque (in-lb)	Gear stage	Service factor (SF)	Catalog number
0.5 (cont.)	566	3.09	52	56	1	4.04	H_681GH71E4
	507	3.45	68	62	1	4.04	
	468	3.74	73	67	1	4.04	
	413	4.24	160	76	1	4.04	
	384	4.56	160	82	1	4.04	
	355	4.93	453	89	1	4.04	
	327	5.36	453	97	1	4.04	
	295	5.92	453	107	1	3.86	
	273	6.42	657	116	1	3.70	
	242	7.23	657	130	1	3.46	
	221	7.92	1078	143	1	3.30	
	198	8.82	1078	159	1	3.10	
	174	10.08	1366	182	1	2.86	
	157	11.18	1366	201	1	2.66	
	141	12.40	1366	223	1	2.48	H_681GH71E4
	258	6.79	904	183	2	3.28	H_682GH71E4
	160	10.93	937	295	2	3.28	
	143	12.25	937	331	2	3.28	
	119	14.74	962	265	2	4.04	
	106	16.45	962	296	2	4.04	
	98	17.82	1306	321	2	4.04	
	87	20.20	1306	364	2	4.03	
	80	21.76	1306	392	2	4.04	
	74	23.53	1306	424	2	4.03	
	68	25.55	1306	460	2	4.04	
	62	28.25	1940	509	2	4.01	
	57	30.60	1940	551	2	3.76	
	51	34.49	1940	621	2	3.41	
	46	37.76	1940	680	2	3.16	
	42	42.06	1940	757	2	2.88	
	36	48.09	2765	866	2	2.56	
	29	59.91	2765	1079	3	4.04	H_683GH71E4
	26	67.14	2765	1209	3	4.04	
	24	73.30	3091	1320	3	4.04	
	22	80.46	3091	1449	3	4.04	
	20	88.59	3091	1595	3	4.04	
	18	96.16	3091	1732	3	4.04	
	17	104.80	3091	1887	3	3.75	
	15	114.78	3170	2067	3	3.43	
	14	126.41	3170	2276	3	3.11	
	12	145.38	3170	2618	3	2.70	
	11	157.50	3170	2836	3	2.50	
	10	174.08	3170	3135	3	2.26	
	9	203.09	3170	3657	3	1.94	
	8	226.07	3170	4071	3	1.74	
	7	248.68	3170	4478	3	1.58	
	6	281.01	3170	5060	3	1.40	
	5.4	325.65	3170	5864	4	1.21	H_684GH71E4
	4.8	363.45	3170	6545	4	1.08	
	4.7	375.72	3170	6766	4	1.05	
	4.2	421.24	3170	7081	4	0.93	
	4.0	436.14	3170	7081	4	0.90	
	3.9	454.92	3170	7081	4	0.86	
	3.6	481.21	3170	7081	4	0.82	
	3.4	522.24	3170	7081	4	0.75	
	3.2	554.44	3170	7081	4	0.71	
	3.0	576.20	3170	7081	4	0.68	

(B) - See footnotes page on inside back cover

ILH integral gearmotors

1750 RPM - 60 Hz

Input power (Hp)	Speed (RPM)	Ratio	OHL (LBF) (B)	Output torque (in-lb)	Gear stage	Service factor (SF)	Catalog number
0.5 (cont.)	23	74.88	4856	1348	3	4.04	H_883GH71E4
	21	83.58	4856	1505	3	4.04	
	19	90.53	4856	1630	3	4.04	
	17	102.61	4856	1848	3	4.04	
	16	110.54	4856	1990	3	4.04	
	15	119.52	4856	2152	3	3.97	
	13	129.79	4856	2337	3	3.72	
	12	143.50	4856	2584	3	3.43	
	11	155.46	4856	2799	3	3.22	
	10	175.18	4856	3154	3	2.91	
	9	191.80	4856	3454	3	2.70	
	8	213.64	4856	3847	3	2.46	
	7	244.29	4856	4399	3	2.19	
	6	270.90	4856	4878	3	2.00	
	6	300.41	4856	5410	3	1.82	
	5.3	332.46	4856	5987	4	2.48	H_884GH71E4
	5.0	350.43	4856	6310	4	2.36	
	4.9	358.15	4856	6449	4	2.31	
	4.4	397.10	4856	7151	4	2.08	
	4.2	418.25	4856	7531	4	1.97	
	3.8	458.61	4856	8258	4	1.80	
	3.7	472.99	4856	8517	4	1.75	
	3.4	521.26	4856	9386	4	1.58	
	3.3	529.60	4856	9537	4	1.56	
	3.0	585.06	4856	10535	4	1.41	H_884GH71E4
	2.9	601.63	4856	10834	4	1.37	
	2.7	646.66	4856	11644	4	1.28	
	2.6	682.81	4856	12295	4	1.21	
	2.3	759.27	4856	13672	4	1.09	
	2.3	773.78	4856	13934	4	1.07	
	2.2	799.16	4856	14390	4	1.03	
	2.0	886.21	4856	14870	4	0.93	
	1.9	932.72	4856	14870	4	0.89	
	1.8	987.02	4856	14870	4	0.84	
	1.7	1004.50	4856	14870	4	0.82	
	1.7	1028.46	4856	14870	4	0.80	
	1.5	1140.49	4856	14870	4	0.72	
	1.4	1226.26	4856	14870	4	0.67	
	6.9	253.24	7343	4560	4	6.02	H_1084GH71E4
	6.6	266.13	7343	4792	4	5.73	

(B) - See footnotes page on inside back cover

ILH integral gearmotors

1750 RPM - 60 Hz

Input power (Hp)	Speed (RPM)	Ratio	OHL (LBF) (B)	Output torque (in-lb)	Gear stage	Service factor (SF)	Catalog number
	6.0	292.42	7343	5266	4	5.21	
	5.2	338.29	7343	6092	4	4.50	
	5.1	345.81	7343	6227	4	4.41	
	4.8	363.19	7343	6540	4	4.20	
	4.6	378.53	7343	6816	4	4.03	
	4.1	423.63	7343	7628	4	3.60	
	4.0	438.48	7343	7896	4	3.48	
	3.8	460.82	7343	8298	4	3.31	
	3.6	485.47	7343	8742	4	3.14	
	3.2	543.23	7343	9782	4	2.80	
	3.1	564.07	7343	10157	4	2.70	
	2.8	625.78	7343	11268	4	2.43	
	2.8	635.01	7343	11435	4	2.40	
	2.4	739.98	7343	13325	4	2.06	
	2.3	757.74	7343	13645	4	2.01	
	2.1	824.99	7343	14856	4	1.85	
	2.0	880.77	7343	15860	4	1.73	**H_1084GH71E4**
	1.9	922.53	7343	16612	4	1.65	
	1.8	950.04	7343	17108	4	1.60	
	1.7	1062.79	7343	19138	4	1.43	
	1.6	1081.38	7343	19473	4	1.41	
	1.5	1210.36	7343	21795	4	1.26	
	1.4	1223.88	7343	22039	4	1.24	
	1.3	1375.86	7343	24775	4	1.11	
	1.2	1436.12	7343	25860	4	1.06	
	1.1	1597.84	7343	27438	4	0.95	
	1.1	1625.92	7343	27438	4	0.94	
	1.0	1738.10	7343	27438	4	0.88	
	0.97	1802.34	7343	27438	4	0.85	
	0.88	1993.11	7343	27438	4	0.76	
	0.84	2092.10	7343	27438	4	0.73	
	0.81	2160.67	7343	27438	4	0.71	
0.5 (cont.)	5.5	320.74	8992	5776	4	7.82	
	5.3	327.50	8992	5897	4	7.65	
	4.7	375.07	8992	6754	4	6.68	
	4.6	381.71	8992	6873	4	6.57	
	4.2	418.40	8992	7534	4	5.99	
	4.1	426.18	8992	7674	4	5.88	
	3.7	473.33	8992	8523	4	5.30	
	3.6	493.16	8992	8880	4	5.08	
	3.3	530.31	8992	9549	4	4.73	
	3.2	550.62	8992	9915	4	4.55	**H_1284GH71E4**
	2.9	614.50	8992	11065	4	4.08	
	2.8	631.72	8992	11375	4	3.97	
	2.5	714.49	8992	12866	4	3.51	
	2.2	798.59	8992	14380	4	3.14	
	2.1	818.73	8992	14743	4	3.06	
	1.9	919.88	8992	16564	4	2.73	
	1.9	944.83	8992	17014	4	2.65	
	1.7	1055.74	8992	19011	4	2.37	
	1.6	1101.80	8992	19840	4	2.28	
	1.5	1191.22	8992	21451	4	2.10	
	1.4	1240.81	8992	22343	4	2.02	
	1.2	1407.67	8992	25348	4	1.78	
	1.1	1531.77	8992	27583	4	1.64	
	1.1	1593.66	8992	28697	4	1.57	
	1.0	1729.93	8992	31151	4	1.45	**H_1284GH71E4**
	0.95	1847.48	8992	33268	4	1.36	
	0.88	1979.04	8992	35637	4	1.27	
	0.84	2072.32	8992	37317	4	1.21	
	0.78	2249.64	8992	40510	4	1.11	
	0.70	2495.13	8992	44930	4	1.00	
	0.67	2614.77	8992	45140	5	0.96	
	0.57	3053.15	8992	45140	5	0.82	**H_1285GH71E4**
	0.52	3343.62	8992	45140	5	0.75	
	0.51	3437.20	8992	45140	5	0.73	

ILH integral gearmotors

1750 RPM - 60 Hz

Input power (Hp)	Speed (RPM)	Ratio	OHL (LBF) (B)	Output torque (in-lb)	Gear stage	Service factor (SF)	Catalog number
0.5 (cont.)	5.1	343.61	11827	6187	4	11.44	H_1484GH71E4
	4.6	381.21	12725	6865	4	10.32	
	4.1	425.63	12725	7664	4	9.24	
	3.9	446.17	12725	8034	4	8.81	
	3.6	483.21	12725	8701	4	8.14	
	3.4	523.09	12725	9419	4	7.52	
	3.1	562.57	12725	10130	4	6.99	
	2.9	608.21	12725	10952	4	6.47	
	2.7	638.35	12725	11495	4	6.16	
	2.5	693.49	12725	12488	4	5.67	
	2.4	730.35	12725	13152	4	5.38	
	2.1	838.20	12725	15094	4	4.69	
	2.0	889.38	12725	16015	4	4.42	
	1.8	951.58	12725	17135	4	4.13	
	1.7	1039.62	12725	18721	4	3.78	
	1.6	1095.38	12725	19725	4	3.59	
	1.8	1106.44	12725	19924	4	3.55	
	1.5	1202.94	12725	21662	4	3.27	
	1.4	1255.67	12725	22611	4	3.13	
	1.3	1397.42	12725	25163	4	2.81	
	1.1	1576.31	12725	28385	4	2.49	
	1.1	1615.18	12725	29085	4	2.43	
	0.95	1841.48	12725	33160	4	2.14	
	0.94	1869.52	12725	33665	4	2.10	
	0.84	2081.96	12725	37490	4	1.89	
	0.78	2246.45	12725	40452	4	1.75	
	0.72	2436.35	12725	43872	4	1.61	
	0.70	2509.13	12725	45182	4	1.57	
	0.66	2657.82	12725	47860	4	1.48	
	0.60	2927.02	12725	52707	4	1.34	
	0.58	3037.51	12725	54697	4	1.29	
	0.52	3368.98	12725	60666	4	1.17	
	0.51	3450.55	12725	62135	5	1.14	H_1485GH71E4
	0.49	3539.62	12725	63739	5	1.11	
	0.44	3938.75	12725	70808	5	1.00	
	0.44	4012.71	12725	70808	5	0.98	
	0.39	4469.99	12725	70808	5	0.88	
	0.37	4701.81	12725	70808	5	0.84	
	0.34	5090.25	12725	70808	5	0.77	
	0.30	5795.44	12725	70808	5	0.68	
	5.3	332.11	17770	5980	4	20.72	H_1684GH71E4
	4.7	370.81	17770	6677	4	18.56	
	4.4	401.98	17770	7238	4	17.12	
	4.1	426.39	17770	7678	4	16.14	
	3.8	462.23	17770	8323	4	14.89	
	3.6	487.42	17770	8777	4	14.12	
	3.3	528.39	17770	9515	4	13.02	
	3.1	564.83	17770	10171	4	12.18	
	2.8	615.41	17770	11082	4	11.18	
	2.5	694.17	17770	12500	4	9.91	
	2.2	782.02	17770	14082	4	8.80	H_1684GH71E4
	2.0	893.72	17770	16093	4	7.70	
	1.7	1037.72	17770	18686	4	6.63	
	1.5	1167.03	17770	21015	4	5.90	
	1.3	1328.86	17770	23929	4	5.18	
	1.1	1545.11	17770	27823	4	4.45	
	1.0	1711.49	17770	30819	4	4.02	
	0.90	1939.74	17770	34929	4	3.55	
	0.80	2193.14	17770	39492	4	3.14	
	0.69	2551.01	17770	45936	4	2.70	
	0.70	2517.61	17770	45335	5	2.73	H_1685GH71E4
	0.60	2908.07	17770	51953	5	2.37	
	0.53	3307.14	17770	59374	5	2.08	

ILH integral gearmotors

1750 RPM - 60 Hz

Input power (Hp)	Speed (RPM)	Ratio	OHL (LBF) (B)	Output torque (in-lb)	Gear stage	Service factor (SF)	Catalog number
0.5 (cont.)	0.47	3730.40	17770	67174	5	1.84	H_1685GH71E4
	0.41	4263.25	17770	76769	5	1.61	
	0.35	4952.83	17770	89186	5	1.39	
	0.31	5584.97	17770	100569	5	1.23	
	0.27	6466.19	17770	116438	5	1.06	
	0.24	7374.54	17770	123914	5	0.93	
.75	1101	1.59	–	43	1	3.28	H_381GH80F4
	946	1.85	–	50	1	3.28	
	854	2.05	–	55	1	3.28	
	781	2.24	50	61	1	3.28	
	700	2.50	102	68	1	3.28	
	641	2.73	102	74	1	3.28	
	583	3.00	211	81	1	3.28	
	529	3.31	269	89	1	3.28	
	477	3.67	258	99	1	3.12	
	422	4.15	371	112	1	2.91	
	382	4.58	371	124	1	2.75	
	338	5.18	543	140	1	2.56	
	296	5.92	543	160	1	2.36	
	260	6.73	583	182	1	2.16	
	243	7.20	583	195	1	1.73	
	211	8.30	834	224	1	1.27	
	188	9.33	834	252	1	1.12	
	367	4.77	518	129	2	3.28	H_382GH80F4
	315	5.55	518	150	2	3.28	
	284	6.16	518	166	2	3.28	
	261	6.71	518	181	2	3.28	
	233	7.50	279	203	2	3.28	
	233	7.52	279	203	2	3.28	
	200	8.75	279	236	2	3.28	
	180	9.70	279	262	2	3.28	
	166	10.57	279	285	2	3.28	
	148	11.82	416	319	2	3.28	
	135	12.92	416	349	2	3.28	
	123	14.18	416	383	2	3.28	
	112	15.64	416	422	2	3.28	
	101	17.33	416	468	2	3.28	
	89	19.64	546	530	2	3.28	
	81	21.67	546	585	2	3.16	
	71	24.50	546	662	2	2.95	
	63	27.97	881	755	2	2.57	
	55	31.80	881	859	2	2.27	
	51	34.04	881	919	2	2.12	
	45	39.24	881	1060	2	1.84	
	40	44.12	1117	1192	2	1.14	
	57	30.74	881	830	3	2.29	H_383GH80F4
	52	33.82	881	913	3	2.13	
	45	39.28	881	1061	3	1.84	
	41	42.53	881	1149	3	1.69	
	36	48.10	1117	1299	3	1.50	
	33	52.86	1117	1428	3	1.36	
	30	58.30	1117	1575	3	1.24	
	27	64.58	1117	1744	3	1.12	
	24	71.91	1117	1942	3	1.00	
	1151	1.52*	–	41	1	3.28	H_481GH80F4
	956	1.83*	–	49	1	3.28	
	814	2.15*	190	58	1	3.28	
	726	2.41	195	65	1	3.28	
	648	2.70	161	73	1	3.28	

(B) - See footnotes page on inside back cover

ILH integral gearmotors

1750 RPM - 60 Hz

Input power (Hp)	Speed (RPM)	Ratio	OHL (LBF) (B)	Output torque (in-lb)	Gear stage	Service factor (SF)	Catalog number
0.75 (cont.)	593	2.95	124	80	1	3.28	H_481GH80F4
	540	3.24	106	88	1	3.28	
	492	3.56	99	96	1	3.28	
	452	3.87	99	105	1	3.28	
	416	4.21	191	114	1	3.28	
	379	4.62	191	125	1	3.28	
	344	5.08	303	137	1	3.28	
	299	5.85	303	158	1	3.08	
	276	6.33	627	171	1	2.95	
	250	7.00	627	189	1	2.79	
	214	8.17	711	221	1	2.52	
	193	9.09	711	246	1	2.31	
	175	10.00	826	270	1	2.21	
	155	11.30	826	305	1	1.60	
	131	13.38	937	361	2	3.28	H_482GH80F4
	119	14.68	937	397	2	3.28	
	108	16.17	937	437	2	3.28	
	100	17.55	1142	474	2	3.28	
	91	19.13	1142	517	2	3.28	
	84	20.95	1142	566	2	3.28	
	76	23.07	1142	623	2	3.28	
	66	26.53	1142	717	2	3.28	
	61	28.74	1517	776	2	3.28	
	55	31.77	1517	858	2	3.20	
	47	37.06	1517	1001	2	2.89	
	42	41.26	1517	1114	2	2.69	
	39	45.38	1884	1226	2	2.55	
	34	51.28	1884	1385	2	2.49	
	49	35.59	1517	961	3	3.28	H_483GH80F4
	42	41.38	1517	1118	3	3.28	
	38	45.91	1884	1240	3	3.21	
	35	50.00	1884	1351	3	2.95	
	31	55.92	1884	1510	3	2.64	
	29	61.14	1884	1651	3	2.41	
	26	67.10	1884	1813	3	2.20	
	24	73.99	1986	1998	3	1.99	
	21	82.02	1986	2215	3	1.80	
	19	92.91	1986	2510	3	1.59	
	17	102.52	1986	2769	3	1.44	
	15	115.91	1986	3131	3	1.27	
	13	132.34	1986	3575	3	1.11	
	8.2	214.43	1986	3983	4	0.69	H_484GH80F4
	319	5.48	875	148	2	3.28	H_582GH80F4
	282	6.21	925	168	2	3.28	
	197	8.86	925	239	2	3.28	
	174	10.04	1025	271	2	3.28	
	143	12.26	1200	331	2	3.28	
	132	13.29	1275	359	2	3.28	
	116	15.09	1400	408	2	3.28	
	109	16.13	1450	436	2	3.28	
	96	18.3	1600	494	2	3.28	
	89	19.74	1650	533	2	3.28	
	82	21.37	1750	577	2	3.28	
	75	23.24	1850	628	2	3.28	
	68	25.75	1950	696	2	3.28	
	62	28.29	2100	764	2	3.28	
	55	31.55	2200	852	2	3.28	
	51	34.57	2200	934	2	3.28	
	46	38.14	2200	1030	2	3.28	
	40	43.61	2200	1178	2	3.28	
	36	49.29	2200	1331	2	3.28	
	32	54.69	2200	1477	2	3.28	
	51	34.27	2200	926	3	3.28	H_583GH80F4
	41	42.99	2200	1161	3	3.28	
	37	47.77	2200	1290	3	3.28	
	32	54.94	2200	1484	3	3.28	
	30	59.09	2200	1596	3	3.28	
	25	68.85	2200	1860	3	2.91	

(B) - See footnotes page on inside back cover

ILH integral gearmotors

1750 RPM - 60 Hz

Input power (Hp)	Speed (RPM)	Ratio	OHL (LBF) (B)	Output torque (in-lb)	Gear stage	Service factor (SF)	Catalog number
0.75 (cont.)	23	74.64	2200	2016	3	2.68	H_583GH80F4
	22	81.21	2200	2194	3	2.47	
	20	88.72	2200	2396	3	2.25	
	18	97.38	2200	2630	3	2.05	
	16	107.49	2200	2903	3	1.85	
	14	121.27	2200	3276	3	1.65	
	13	133.36	2200	3602	3	1.49	
	12	147.66	2200	3988	3	1.36	
	10	173.17	2200	4677	3	1.16	
	9	191.09	2200	5161	3	1.04	
	858	2.04	140	55	1	3.28	H_681GH80F4
	732	2.39	111	65	1	3.28	
	614	2.85	52	77	1	3.28	
	566	3.09	52	83	1	3.28	
	507	3.45	68	93	1	3.28	
	468	3.74	73	101	1	3.28	
	413	4.24	160	115	1	3.28	
	384	4.56	160	123	1	3.28	
	355	4.93	453	133	1	3.28	
	326	5.36	453	145	1	3.28	
	296	5.92	453	160	1	3.28	
	273	6.42	657	173	1	3.28	
	242	7.23	657	195	1	3.09	
	221	7.92	1078	214	1	2.92	
	198	8.82	1078	238	1	2.75	
	174	10.08	1366	272	1	2.51	
	157	11.18	1366	302	1	2.33	
	141	12.40	1366	335	1	2.04	
	346	5.06	1466	137	2	3.28	H_682GH80F4
	295	5.93	1466	160	2	3.28	
	180	9.73	1057	263	2	3.28	
	154	11.40	962	308	2	3.28	
	129	13.59	962	367	2	3.28	
	119	14.74	962	398	2	3.28	
	106	16.45	962	444	2	3.28	
	98	17.82	1306	481	2	3.28	
	87	20.20	1306	546	2	3.28	
	80	21.76	1306	588	2	3.28	
	74	23.53	1306	636	2	3.28	
	68	25.55	1306	690	2	3.28	
	62	28.25	1940	763	2	3.28	
	57	30.60	1940	827	2	3.28	
	51	34.49	1940	931	2	3.28	
	46	37.76	1940	1020	2	3.28	
	42	42.06	1940	1136	2	3.15	
	36	48.09	2765	1299	2	2.88	
	46	37.80	1940	1021	3	3.28	H_683GH80F4
	39	45.41	2765	1227	3	3.28	
	33	53.47	2765	1444	3	3.28	
	29	59.91	2765	1618	3	3.28	H_683GH80F4
	26	67.14	2765	1814	3	3.28	
	24	73.30	3091	1980	3	3.28	
	22	80.46	3091	2173	3	3.25	
	20	88.59	3091	2393	3	2.96	
	18	96.16	3091	2597	3	2.72	
	17	104.80	3091	2831	3	2.50	
	15	114.78	3170	3100	3	2.28	
	14	126.41	3170	3415	3	2.07	
	12	145.38	3170	3927	3	1.80	
	11	157.50	3170	4254	3	1.66	
	10	174.08	3170	4702	3	1.51	
	9	203.09	3170	5486	3	1.29	
	8	226.07	3170	6106	3	1.16	
	7	248.68	3170	6717	3	1.05	
	5.4	325.65	3170	7081	4	0.81	H_684GH80F4
	4.8	363.45	3170	7081	4	0.72	
	4.7	375.72	3170	7081	4	0.70	

ILH integral gearmotors

1750 RPM - 60 Hz

Input power (Hp)	Speed (RPM)	Ratio	OHL (LBF) (B)	Output torque (in-lb)	Gear stage	Service factor (SF)	Catalog number
0.75 (cont.)	35	49.42	4856	1335	3	3.28	H_883GH80F4
	30	57.93	4856	1565	3	3.28	
	25	69.05	4856	1865	3	3.28	H_883GH80F4
	23	74.88	4856	2023	3	3.28	
	21	83.58	4856	2258	3	3.28	
	19	90.53	4856	2445	3	3.28	
	17	102.61	4856	2772	3	3.28	
	16	110.54	4856	2986	3	3.28	
	15	119.52	4856	3228	3	3.28	
	13	129.79	4856	3506	3	3.28	
	12	143.50	4856	3876	3	3.28	
	11	155.46	4856	4199	3	3.28	
	10	175.18	4856	4732	3	3.15	
	9	191.80	4856	5181	3	2.87	
	8	213.64	4856	5770	3	2.57	
	7	244.29	4856	6598	3	2.25	
	6	270.90	4856	7317	3	2.03	
	6	300.41	4856	8114	3	1.83	
	5.3	332.46	4856	8980	4	1.66	H_884GH80F4
	5.0	350.43	4856	9465	4	1.57	
	4.9	358.15	4856	9674	4	1.54	
	4.4	397.10	4856	10726	4	1.39	
	4.2	418.25	4856	11297	4	1.32	
	3.8	458.61	4856	12387	4	1.20	
	3.7	472.99	4856	12776	4	1.16	
	3.4	521.26	4856	14080	4	1.06	
	3.3	529.60	4856	14305	4	1.04	
	3.0	585.06	4856	14870	4	0.94	
	2.9	601.63	4856	14870	4	0.92	
	2.7	646.66	4856	14870	4	0.85	
	2.6	682.81	4856	14870	4	0.81	
	2.3	759.27	4856	14870	4	0.73	
	2.3	773.78	4856	14870	4	0.71	
	2.2	799.16	4856	14870	4	0.69	
	6.9	253.24	7343	6840	4	4.01	H_1084GH80F4
	6.6	266.13	7343	7188	4	3.82	
	6.0	292.42	7343	7898	4	3.47	
	5.2	338.29	7343	9138	4	3.00	
	5.1	345.81	7343	9341	4	2.94	
	4.8	363.19	7343	9810	4	2.80	
	4.6	378.53	7343	10224	4	2.68	
	4.1	423.63	7343	11443	4	2.40	
	4.0	438.48	7343	11844	4	2.32	
	3.8	460.82	7343	12447	4	2.20	
	3.6	485.47	7343	13113	4	2.09	
	3.2	543.23	7343	14673	4	1.87	
	3.1	564.07	7343	15236	4	1.80	
	2.8	625.78	7343	16903	4	1.62	
	2.8	635.01	7343	17152	4	1.60	
	2.4	739.98	7343	19987	4	1.37	
	2.3	757.74	7343	20467	4	1.34	
	2.1	824.99	7343	22284	4	1.23	
	2.0	880.77	7343	23790	4	1.15	
	1.9	922.53	7343	24918	4	1.10	
	1.8	950.04	7343	25661	4	1.07	
	1.7	1062.79	7343	27438	4	0.96	
	1.6	1081.38	7343	27438	4	0.94	H_1084GH80F4
	1.5	1210.36	7343	27438	4	0.84	
	1.4	1223.88	7343	27438	4	0.83	
	1.3	1375.86	7343	27438	4	0.74	
	1.2	1436.12	7343	27438	4	0.71	

(B) - See footnotes page on inside back cover

ILH integral gearmotors

1750 RPM - 60 Hz

Input power (Hp)	Speed (RPM)	Ratio	OHL (LBF) (B)	Output torque (in-lb)	Gear stage	Service factor (SF)	Catalog number
	5.5	320.74	8992	8663	4	5.21	
	5.3	327.50	8992	8846	4	5.10	
	4.7	375.07	8992	10131	4	4.46	
	4.6	381.71	8992	10310	4	4.38	
	4.2	418.40	8992	11301	4	3.99	
	4.1	426.18	8992	11511	4	3.92	
	3.7	473.33	8992	12785	4	3.53	
	3.6	493.16	8992	13321	4	3.39	**H_1284GH80F4**
	3.3	530.31	8992	14324	4	3.15	
	3.2	550.62	8992	14873	4	3.04	
	2.9	614.50	8992	16598	4	2.72	
	2.8	631.72	8992	17063	4	2.65	
	2.5	714.49	8992	19299	4	2.34	
	2.2	798.59	8992	21570	4	2.09	
	2.1	818.73	8992	22114	4	2.04	
	1.9	919.88	8992	24847	4	1.82	
	1.9	944.83	8992	25521	4	1.77	
	1.7	1055.74	8992	28516	4	1.58	
	1.6	1101.80	8992	29760	4	1.52	
	1.5	1191.22	8992	32176	4	1.40	
	1.4	1240.81	8992	33515	4	1.35	
	1.2	1407.67	8992	38022	4	1.19	
	1.1	1531.77	8992	41374	4	1.09	**H_1284GH80F4**
	1.1	1593.66	8992	43046	4	1.05	
	1.0	1729.93	8992	45140	4	0.97	
	0.95	1847.48	8992	45140	4	0.90	
	0.88	1979.04	8992	45140	4	0.84	
	0.84	2072.32	8992	45140	4	0.81	
	0.78	2249.64	8992	45140	4	0.74	
	0.70	2495.13	8992	45140	4	0.67	
	5.1	343.61	11827	9281	4	7.63	
	4.4	381.21	12725	10297	4	6.88	
.75 (cont.)	4.1	425.63	12725	11496	4	6.16	
	3.9	446.17	12725	12051	4	5.88	
	3.6	483.21	12725	13052	4	5.43	
	3.4	523.09	12725	14129	4	5.01	
	3.1	562.57	12725	15195	4	4.66	
	2.9	608.21	12725	16428	4	4.31	
	2.7	638.35	12725	17242	4	4.11	
	2.5	693.49	12725	18732	4	3.78	
	2.4	730.35	12725	19727	4	3.59	
	2.1	838.20	12725	22640	4	3.13	
	2.0	889.38	12725	24023	4	2.95	
	1.8	951.58	12725	25703	4	2.75	
	1.7	1039.62	12725	28081	4	2.52	
	1.6	1095.38	12725	29587	4	2.39	
	1.6	1106.44	12725	29886	4	2.37	**H_1484GH80F4**
	1.5	1202.94	12725	32492	4	2.18	
	1.4	1255.67	12725	33917	4	2.09	
	1.3	1397.42	12725	37745	4	1.88	
	1.1	1576.31	12725	42577	4	1.66	
	1.1	1615.18	12725	43627	4	1.62	
	0.95	1841.48	12725	49740	4	1.42	
	0.94	1869.52	12725	50497	4	1.40	
	0.84	2081.96	12725	56235	4	1.26	
	0.78	2246.45	12725	60678	4	1.17	
	0.72	2436.35	12725	65808	4	1.08	
	0.70	2509.13	12725	67773	4	1.04	
	0.66	2657.82	12725	70808	4	0.99	
	0.60	2927.02	12725	70808	4	0.90	
	0.58	3037.51	12725	70808	4	0.86	
	0.52	3368.98	12725	70808	4	0.78	
	0.51	3450.55	12725	70808	5	0.76	
	0.49	3539.62	12725	70808	5	0.74	**H_1485GH80F4**
	0.44	3938.75	12725	70808	5	0.67	

(B) - See footnotes page on inside back cover

ILH integral gearmotors

1750 RPM - 60 Hz

Input power (Hp)	Speed (RPM)	Ratio	OHL (LBF) (B)	Output torque (in-lb)	Gear stage	Service factor (SF)	Catalog number
.75 (cont.)	5.3	332.11	17770	8971	4	13.81	H_1684GH80F4
	4.7	370.81	17770	10016	4	12.37	
	4.4	401.98	17770	10858	4	11.41	
	4.1	426.39	17770	11517	4	10.76	
	3.8	462.23	17770	12485	4	9.92	
	3.6	487.42	17770	13165	4	9.41	
	3.3	528.39	17770	14272	4	8.68	
	3.1	564.83	17770	15257	4	8.12	
	2.8	615.41	17770	16623	4	7.45	
	2.5	694.17	17770	18750	4	6.61	
	2.2	782.02	17770	21123	4	5.87	
	2.0	893.72	17770	24140	4	5.13	
	1.7	1037.72	17770	28029	4	4.42	
	1.5	1167.03	17770	31522	4	3.93	
	1.3	1328.86	17770	35893	4	3.45	
	1.1	1545.11	17770	41735	4	2.97	
	1.0	1711.49	17770	46228	4	2.68	
	0.90	1939.74	17770	52394	4	2.37	
	0.80	2193.14	17770	59238	4	2.09	
	0.69	2551.01	17770	68905	4	1.80	
	0.70	2517.61	17770	68002	5	1.82	H_1685GH80F4
	0.60	2908.07	17770	77929	5	1.58	H_1685GH80F4
	0.53	3307.14	17770	89060	5	1.39	
	0.47	3730.40	17770	100761	5	1.23	
	0.41	4263.25	17770	115153	5	1.08	
	0.35	4952.83	17770	123914	5	0.93	
	0.31	5584.97	17770	123914	5	0.82	
	0.27	6466.19	17770	123914	5	0.71	
1	1101	1.59	–	57	1	2.46	H_381GH80G4
	946	1.85	–	67	1	2.46	
	854	2.05	–	74	1	2.46	
	781	2.24	50	81	1	2.46	
	700	2.50	102	90	1	2.46	
	641	2.73	102	98	1	2.46	
	583	3.00	211	108	1	2.46	
	529	3.31	269	119	1	2.46	
	477	3.67	258	132	1	2.34	
	422	4.15	371	149	1	2.18	
	382	4.58	371	165	1	2.06	
	338	5.18	543	187	1	1.92	
	296	5.92	543	213	1	1.77	
	260	6.73	583	242	1	1.62	
	243	7.20	583	259	1	1.30	
	367	4.77	518	172	2	2.46	H_382GH80G4
	315	5.55	518	200	2	2.46	
	284	6.16	518	222	2	2.46	
	261	6.71	518	242	2	2.45	
	233	7.50	279	270	2	2.46	
	233	7.52	279	271	2	2.46	
	200	8.75	279	315	2	2.46	
	180	9.70	279	349	2	2.46	
	166	10.57	279	381	2	2.45	
	148	11.82	416	426	2	2.46	
	135	12.92	416	465	2	2.46	
	123	14.18	416	511	2	2.46	
	112	15.64	416	563	2	2.46	
	101	17.33	416	624	2	2.46	
	89	19.64	546	707	2	2.46	
	81	21.67	546	780	2	2.37	
	71	24.50	546	882	2	2.21	
	63	27.97	881	1007	2	1.93	
	55	31.80	881	1145	2	1.70	
	51	34.04	881	1226	2	1.59	
	45	39.24	881	1413	2	1.38	

(B) - See footnotes page on inside back cover

ILH integral gearmotors

1750 RPM - 60 Hz

Input power (Hp)	Speed (RPM)	Ratio	OHL (LBF) (B)	Output torque (in-lb)	Gear stage	Service factor (SF)	Catalog number
1 (cont.)	57	30.74	881	1107	3	1.72	H_383GH80G4
	52	33.82	881	1218	3	1.60	
	45	39.28	881	1415	3	1.38	
	41	42.53	881	1532	3	1.27	
	36	48.10	1117	1732	3	1.12	
	33	52.86	1117	1904	3	1.02	
	1151	1.52	–	55	1	2.46	H_481GH80G4
	956	1.83	–	66	1	2.46	
	814	2.15	190	77	1	2.46	
	726	2.41	195	87	1	2.46	
	648	2.70	161	97	1	2.46	
	593	2.95	124	106	1	2.46	
	540	3.24	106	117	1	2.46	
	492	3.56	99	128	1	2.46	
	452	3.87	99	139	1	2.46	
	416	4.21	191	152	1	2.46	
	379	4.62	191	166	1	2.46	
	344	5.08	303	183	1	2.46	
	299	5.85	303	211	1	2.31	
	276	6.33	627	228	1	2.21	
	250	7.00	627	252	1	2.09	
	214	8.17	711	294	1	1.89	
	193	9.09	711	327	1	1.73	
	175	10.00	826	360	1	1.66	
	155	11.30	826	407	1	1.20	
	409	4.28	896	154	2	2.46	H_482GH80G4
	340	5.15	904	185	2	2.46	
	289	6.06	904	218	2	2.46	H_482GH80G4
	258	6.79	904	245	2	2.45	
	254	6.90	904	248	2	2.46	
	211	8.29	919	298	2	2.05	
	179	9.76	919	351	2	2.46	
	160	10.93	937	394	2	2.46	
	143	12.25	937	441	2	2.46	
	131	13.38	937	482	2	2.46	
	119	14.68	937	529	2	2.46	
	108	16.17	937	582	2	2.46	
	100	17.55	1142	632	2	2.46	
	91	19.13	1142	689	2	2.46	
	84	20.95	1142	754	2	2.46	
	76	23.07	1142	831	2	2.46	
	66	26.53	1142	956	2	2.46	
	61	28.74	1517	1035	2	2.46	
	55	31.77	1517	1144	2	2.40	
	47	37.06	1517	1335	2	2.17	
	42	41.26	1517	1486	2	2.02	
	39	45.38	1884	1634	2	1.91	
	34	51.28	1884	1847	2	1.87	
	49	35.59	1517	1282	3	2.46	H_483GH80G4
	42	41.38	1517	1490	3	2.46	
	38	45.91	1884	1654	3	2.41	
	35	50.00	1884	1801	3	2.21	
	31	55.92	1884	2014	3	1.98	
	29	61.14	1884	2202	3	1.81	
	26	67.10	1884	2417	3	1.65	
	24	73.99	1986	2665	3	1.49	
	21	82.02	1986	2954	3	1.35	
	19	92.91	1986	3346	3	1.19	
	17	102.52	1986	3692	3	1.08	

(B) - See footnotes page on inside back cover

ILH integral gearmotors

1750 RPM - 60 Hz

Input power (Hp)	Speed (RPM)	Ratio	OHL (LBF) (B)	Output torque (in-lb)	Gear stage	Service factor (SF)	Catalog number
1 (cont.)	319	5.48	875	197	2	2.46	H_582GH80G4
	282	6.21	925	224	2	2.46	
	197	8.86	925	319	2	2.46	
	174	10.04	1025	362	2	2.46	
	143	12.26	1200	442	2	2.46	
	132	13.29	1275	479	2	2.46	
	116	15.09	1400	543	2	2.46	
	109	16.13	1450	581	2	2.46	
	96	18.3	1600	659	2	2.46	
	89	19.74	1650	711	2	2.46	
	82	21.37	1750	770	2	2.46	
	75	23.24	1850	837	2	2.46	
	68	25.75	1950	927	2	2.46	
	62	28.29	2100	1019	2	2.46	
	55	31.55	2200	1136	2	2.46	
	51	34.57	2200	1245	2	2.46	
	46	38.14	2200	1374	2	2.46	
	40	43.61	2200	1571	2	2.46	
	36	49.29	2200	1775	2	2.46	
	32	54.69	2200	1970	2	2.46	
	51	34.27	2200	1234	3	2.46	H_583GH80G4
	41	42.99	2200	1548	3	2.46	
	37	47.77	2200	1720	3	2.46	
	32	54.94	2200	1979	3	2.46	
	30	59.09	2200	2128	3	2.46	
	25	68.85	2200	2480	3	2.18	
	23	74.64	2200	2688	3	2.01	
	22	81.21	2200	2925	3	1.85	
	20	88.72	2200	3195	3	1.69	
	18	97.38	2200	3507	3	1.54	
	16	107.49	2200	3871	3	1.39	
	14	121.27	2200	4367	3	1.24	
	13	133.36	2200	4803	3	1.12	
	12	147.66	2200	5318	3	1.02	
	858	2.04	140	73	1	2.46	H_681GH80G4
	732	2.39	111	86	1	2.46	
	614	2.85	52	103	1	2.46	H_681GH80G4
	566	3.09	52	111	1	2.46	
	507	3.45	68	124	1	2.46	
	468	3.74	73	135	1	2.46	
	413	4.24	160	153	1	2.46	
	384	4.56	160	164	1	2.46	
	355	4.93	453	178	1	2.46	
	326	5.36	453	193	1	2.46	
	296	5.92	453	213	1	2.46	
	273	6.42	657	231	1	2.46	
	242	7.23	657	260	1	2.32	
	221	7.92	1078	285	1	2.19	
	198	8.82	1078	318	1	2.06	
	174	10.08	1366	363	1	1.88	
	157	11.18	1366	403	1	1.75	
	141	12.40	1366	447	1	1.53	

(B) - See footnotes page on inside back cover

ILH integral gearmotors

1750 RPM - 60 Hz

Input power (Hp)	Speed (RPM)	Ratio	OHL (LBF) (B)	Output torque (in-lb)	Gear stage	Service factor (SF)	Catalog number
1 (cont.)	346	5.06	1466	182	2	2.46	H_682GH80G4
	295	5.93	1466	214	2	2.45	
	180	9.73	1057	350	2	2.46	
	153	11.40	962	411	2	2.46	
	129	13.59	962	490	2	2.46	
	119	14.74	962	531	2	2.46	
	106	16.45	962	593	2	2.46	
	98	17.82	1306	642	2	2.46	
	87	20.20	1306	727	2	2.46	
	80	21.76	1306	784	2	2.46	
	74	23.53	1306	847	2	2.46	
	68	25.55	1306	920	2	2.46	
	62	28.25	1940	1017	2	2.46	
	57	30.60	1940	1102	2	2.46	
	51	34.49	1940	1242	2	2.46	
	46	37.76	1940	1360	2	2.46	
	42	42.06	1940	1515	2	2.36	
	36	48.09	2765	1732	2	2.16	
	46	37.80	1940	1361	3	2.46	H_683GH80G4
	39	45.41	2765	1635	3	2.46	
	33	53.47	2765	1926	3	2.46	
	29	59.91	2765	2158	3	2.46	
	26	67.14	2765	2418	3	2.46	
	24	73.30	3091	2640	3	2.46	
	22	80.46	3091	2898	3	2.44	
	20	88.59	3091	3191	3	2.22	
	18	96.16	3091	3463	3	2.04	
	17	104.80	3091	3774	3	1.88	
	15	114.78	3170	4134	3	1.71	
	14	126.41	3170	4553	3	1.56	
	12	145.38	3170	5236	3	1.35	
	11	157.50	3170	5672	3	1.25	
	10	174.08	3170	6269	3	1.13	
	35	49.42	4856	1780	3	2.46	H_883GH80G4
	30	57.93	4856	2086	3	2.46	
	25	69.05	4856	2487	3	2.46	
	23	74.88	4856	2697	3	2.46	
	21	83.58	4856	3010	3	2.46	
	19	90.53	4856	3260	3	2.46	
	17	102.61	4856	3695	3	2.46	
	16	110.54	4856	3981	3	2.46	
	15	119.52	4856	4304	3	2.46	
	13	129.79	4856	4674	3	2.46	
	12	143.50	4856	5168	3	2.46	
	11	155.46	4856	5599	3	2.46	
	10	175.18	4856	6309	3	2.36	
	9	191.80	4856	6907	3	2.15	
	8	213.64	4856	7694	3	1.93	
	7	244.29	4856	8798	3	1.69	
	6	270.90	4856	9756	3	1.52	
	6	300.41	4856	10819	3	1.37	
	5.3	332.46	4856	11973	4	1.24	H_884GH80G4
	5.0	350.43	4856	12621	4	1.18	H_884GH80G4
	4.9	358.15	4856	12899	4	1.15	
	4.4	397.10	4856	14301	4	1.04	
	4.2	418.25	4856	14870	4	0.99	
	3.8	458.61	4856	14870	4	0.90	
	3.7	472.99	4856	14870	4	0.87	
	3.4	521.26	4856	14870	4	0.79	
	3.3	529.60	4856	14870	4	0.78	

(B) - See footnotes page on inside back cover

ILH integral gearmotors

1750 RPM - 60 Hz

Input power (Hp)	Speed (RPM)	Ratio	OHL (LBF) (B)	Output torque (in-lb)	Gear stage	Service factor (SF)	Catalog number
	24	71.59	7343	2578	3	2.46	
	21	82.14	7343	2958	3	2.46	
	18	96.94	7343	3491	3	2.46	
	17	105.08	7343	3784	3	2.46	
	15	116.83	7343	4207	3	2.46	
	14	126.90	7343	4570	3	2.46	
	12	140.37	7343	5055	3	2.46	
	12	150.70	7343	5427	3	2.46	
	11	162.40	7343	5849	3	2.46	**H_1083GH80G4**
	10	175.78	7343	6330	3	2.46	
	9	191.21	7343	6886	3	2.46	
	8	209.21	7343	7535	3	2.46	
	7	235.19	7343	8470	3	2.46	
	7	256.86	7343	9251	3	2.46	
	6	284.73	7343	10254	3	2.37	
	5	325.21	7343	11712	3	2.17	
	5	359.30	7343	12940	3	2.03	
	6.9	253.24	7343	9120	4	3.01	
	6.6	266.13	7343	9585	4	2.86	
	6.0	292.42	7343	10531	4	2.61	
	5.2	338.29	7343	12183	4	2.25	
	5.1	345.81	7343	12454	4	2.20	
	4.8	363.19	7343	13080	4	2.10	
	4.6	378.53	7343	13632	4	2.01	
	4.1	423.63	7343	15257	4	1.80	
	4.0	438.48	7343	15792	4	1.74	
	3.8	460.82	7343	16596	4	1.65	
	3.6	485.47	7343	17484	4	1.57	**H_1084GH80G4**
	3.2	543.23	7343	19564	4	1.40	
	3.1	564.07	7343	20315	4	1.35	
1 (cont.)	2.8	625.78	7343	22537	4	1.22	
	2.8	635.01	7343	22870	4	1.20	
	2.4	739.98	7343	26650	4	1.03	
	2.3	757.74	7343	27289	4	1.01	
	2.1	824.99	7343	27438	4	0.92	
	2.0	880.77	7343	27438	4	0.86	
	1.9	922.53	7343	27438	4	0.83	
	1.8	950.04	7343	27438	4	0.80	
	5.5	320.74	8992	11551	4	3.91	
	5.3	327.50	8992	11795	4	3.83	
	4.7	375.07	8992	13508	4	3.34	
	4.6	381.71	8992	13747	4	3.28	
	4.2	418.40	8992	15068	4	3.00	
	4.1	426.18	8992	15349	4	2.94	
	3.7	473.33	8992	17047	4	2.65	
	3.6	493.16	8992	17761	4	2.54	**H_1284GH80G4**
	3.3	530.31	8992	19099	4	2.36	
	3.2	550.62	8992	19830	4	2.28	
	2.9	614.50	8992	22131	4	2.04	
	2.8	631.72	8992	22751	4	1.98	
	2.5	714.49	8992	25732	4	1.75	
	2.2	798.59	8992	28761	4	1.57	
	2.2	818.73	8992	29486	4	1.53	
	1.9	919.88	8992	33129	4	1.36	
	1.9	944.83	8992	34027	4	1.33	
	1.7	1055.74	8992	38022	4	1.19	
	1.6	1101.80	8992	39681	4	1.14	
	1.5	1191.22	8992	42901	4	1.05	**H_1284GH80G4**
	1.4	1240.81	8992	44687	4	1.01	
	1.2	1407.67	8992	45140	4	0.89	
	1.1	1531.77	8992	45140	4	0.82	
	1.1	1593.66	8992	45140	4	0.79	

ILH integral gearmotors

1750 RPM - 60 Hz

Input power (Hp)	Speed (RPM)	Ratio	OHL (LBF) (B)	Output torque (in-lb)	Gear stage	Service factor (SF)	Catalog number
1 (cont.)	5.1	343.61	11827	12375	4	5.72	H_1484GH80G4
	4.6	381.21	12725	13729	4	5.16	
	4.1	425.63	12725	15329	4	4.62	
	3.9	446.17	12725	16068	4	4.41	
	3.6	483.21	12725	17403	4	4.07	
	3.4	523.09	12725	18839	4	3.76	
	3.1	562.57	12725	20260	4	3.49	
	2.9	608.21	12725	21904	4	3.23	
	2.7	638.35	12725	22990	4	3.08	
	2.5	693.49	12725	24976	4	2.84	
	2.4	730.35	12725	26303	4	2.69	
	2.1	838.20	12725	30187	4	2.35	
	2.0	889.38	12725	32030	4	2.21	
	1.8	951.58	12725	34271	4	2.07	
	1.7	1039.62	12725	37441	4	1.89	
	1.6	1095.38	12725	39449	4	1.79	
	1.6	1106.44	12725	39848	4	1.78	
	1.5	1202.94	12725	43323	4	1.63	
	1.4	1255.67	12725	45222	4	1.57	
	1.3	1397.42	12725	50327	4	1.41	
	1.1	1576.31	12725	56770	4	1.25	
	1.1	1615.18	12725	58170	4	1.22	
	0.95	1841.48	12725	66320	4	1.07	
	0.94	1869.52	12725	67329	4	1.05	
	0.84	2081.96	12725	70808	4	0.94	
	0.78	2246.45	12725	70808	4	0.88	
	0.72	2436.35	12725	70808	4	0.81	
	0.70	2509.13	12725	70808	4	0.78	
	5.3	332.11	17770	11961	4	10.36	H_1684GH80G4
	4.7	370.81	17770	13354	4	9.28	
	4.4	401.98	17770	14477	4	8.56	
	4.1	426.39	17770	15356	4	8.07	
	3.8	462.23	17770	16647	4	7.44	
	3.6	487.42	17770	17554	4	7.06	
	3.3	528.39	17770	19029	4	6.51	
	3.1	564.83	17770	20342	4	6.09	
	2.8	615.41	17770	22164	4	5.59	
	2.5	694.17	17770	25000	4	4.96	
	2.2	782.02	17770	28164	4	4.40	
	2.0	893.72	17770	32187	4	3.85	
	1.7	1037.72	17770	37373	4	3.32	
	1.5	1167.03	17770	42030	4	2.95	
	1.3	1328.86	17770	47858	4	2.59	
	1.1	1545.11	17770	55646	4	2.23	
	1.0	1711.49	17770	61638	4	2.01	
	0.90	1939.74	17770	69858	4	1.77	
	0.80	2193.14	17770	78984	4	1.57	
	0.69	2551.01	17770	91873	4	1.35	
	0.70	2517.61	17770	90670	5	1.37	H_1685GH80G4
	0.60	2908.07	17770	103905	5	1.18	H_1685GH80G4
	0.53	3307.14	17770	118747	5	1.04	
	0.47	3730.40	17770	123914	5	0.92	
	0.41	4263.25	17770	123914	5	0.81	

(B) - See footnotes page on inside back cover

ILH integral gearmotors

1750 RPM - 60 Hz

Input power (Hp)	Speed (RPM)	Ratio	OHL (LBF) (B)	Output torque (in-lb)	Gear stage	Service factor (SF)	Catalog number
	1100	1.59	–	86	1	3.23	
	946	1.85	–	100	1	3.06	
	853	2.05	–	111	1	2.95	
	783	2.24	50	121	1	2.95	
	700	2.50	102	135	1	2.71	
	640	2.73	102	148	1	2.60	
	583	3.00	211	162	1	2.48	H_381GH90H4
	529	3.31	269	179	1	2.48	
	477	3.67	258	198	1	2.37	
	421	4.15	371	224	1	2.11	
	382	4.58	371	248	1	2.01	
	338	5.18	543	280	1	1.87	
	296	5.92	543	320	1	1.87	
	260	6.73	583	363	1	1.47	
	367	4.77	518	258	2	3.33	
	315	5.55	518	300	2	3.33	
	284	6.16	518	333	2	3.33	
	261	6.71	518	362	2	3.33	
	233	7.50	279	405	2	3.17	
	233	7.52	279	406	2	3.34	
	200	8.75	279	472	2	3.33	
	180	9.70	279	524	2	3.24	
	166	10.57	279	571	2	3.06	
	148	11.82	416	638	2	2.84	H_382GH90H4
	135	12.92	416	698	2	2.67	
	123	14.18	416	766	2	2.51	
	112	15.64	416	845	2	2.30	
	101	17.33	416	936	2	2.08	
	89	19.64	546	1061	2	1.84	
	81	21.67	546	1170	2	1.66	
	71	24.50	546	1323	2	1.47	
1.5	63	27.97	881	1511	2	1.29	
	55	31.80	881	1718	2	1.13	
	51	34.04	881	1839	2	1.06	
	57	30.74	881	1661	3	1.15	H_383GH90H4
	52	33.82	881	1827	3	1.07	
	1151	1.52	–	82	1	3.34	
	958	1.83	–	99	1	3.34	
	814	2.15	190	116	1	3.34	
	726	2.41	195	130	1	3.34	
	648	2.70	161	146	1	3.24	
	594	2.95	124	159	1	3.24	
	541	3.24	106	175	1	3.13	
	491	3.56	99	192	1	2.88	
	453	3.87	99	209	1	2.88	H_481GH90H4
	415	4.21	191	228	1	2.65	
	379	4.62	191	249	1	2.65	
	344	5.08	303	275	1	2.41	
	299	5.85	303	316	1	2.41	
	276	6.33	627	342	1	2.15	
	250	7.00	627	378	1	2.03	
	214	8.17	711	441	1	2.03	
	193	9.09	711	491	1	1.15	
	175	10.00	826	540	1	1.31	
	409	4.28	896	231	2	3.34	
	340	5.15	904	278	2	3.34	
	289	6.06	904	327	2	3.34	
	258	6.79	904	367	2	3.33	
	254	6.90	904	373	2	3.33	H_482GH90H4
	211	8.29	919	448	2	3.33	
	179	9.76	919	527	2	3.34	
	160	10.93	937	591	2	3.34	
	143	12.25	937	662	2	3.34	

(B) - See footnotes page on inside back cover

ILH integral gearmotors

1750 RPM - 60 Hz

Input power (Hp)	Speed (RPM)	Ratio	OHL (LBF) (B)	Output torque (in-lb)	Gear stage	Service factor (SF)	Catalog number
1.5 (cont.)	131	13.38	937	723	2	3.33	H_482GH90H4
	119	14.68	937	793	2	3.34	
	108	16.17	937	873	2	3.33	
	100	17.55	1142	948	2	3.24	
	91	19.13	1142	1033	2	3.10	
	84	20.95	1142	1132	2	2.96	
	76	23.07	1142	1246	2	2.82	
	66	26.53	1142	1433	2	2.62	
	61	28.74	1517	1553	2	2.51	
	55	31.77	1517	1716	2	2.32	
	47	37.06	1517	2002	2	1.99	
	42	41.26	1517	2229	2	1.79	
	39	45.38	1884	2452	2	1.62	
	49	35.59	1517	1922	3	2.07	H_483GH90H4
	42	41.38	1517	2235	3	1.78	
	38	45.91	1884	2480	3	1.61	
	35	50.00	1884	2701	3	1.47	
	31	55.92	1884	3021	3	1.32	
	29	61.14	1884	3303	3	1.21	
	26	67.10	1884	3625	3	1.10	
	319	5.48	875	296	2	3.34	H_582GH90H4
	282	6.21	925	335	2	3.34	
	197	8.86	925	479	2	3.34	
	174	10.04	1025	542	2	3.34	
	143	12.26	1200	662	2	3.34	
	132	13.29	1275	718	2	3.34	
	116	15.09	1400	815	2	3.34	
	109	16.13	1450	871	2	3.34	
	96	18.3	1600	989	2	3.34	
	89	19.74	1650	1066	2	3.34	
	82	21.37	1750	1154	2	3.34	
	75	23.24	1850	1255	2	3.34	
	68	25.75	1950	1391	2	3.34	
	62	28.29	2100	1528	2	3.34	
	55	31.55	2200	1704	2	3.07	
	51	34.57	2200	1868	2	2.87	
	46	38.14	2200	2060	2	2.6	
	40	43.61	2200	2356	2	2.27	
	36	49.29	2200	2663	2	2.03	
	32	54.69	2200	2954	2	1.83	
	51	34.27	2200	1851	3	2.86	H_583GH90H4
	41	42.99	2200	2322	3	2.31	
	37	47.77	2200	2581	3	2.09	
	32	54.94	2200	2968	3	1.82	
	30	59.09	2200	3192	3	1.69	
	25	68.85	2200	3719	3	1.45	
	23	74.64	2200	4032	3	1.34	
	22	81.21	2200	4387	3	1.23	
	20	88.72	2200	4793	3	1.13	
	18	97.38	2200	5261	3	1.03	
	858	2.04	140	110	1	3.34	H_681GH90H4
	732	2.39	111	129	1	3.34	
	614	2.85	52	154	1	3.34	
	566	3.09	52	167	1	3.24	
	507	3.45	68	186	1	3.10	
	468	3.74	73	202	1	3.10	
	413	4.24	160	229	1	2.99	
	384	4.56	160	246	1	2.71	
	355	4.93	453	267	1	2.60	
	327	5.36	453	289	1	2.60	
	295	5.92	453	320	1	2.35	
	273	6.42	657	347	1	2.35	
	242	7.23	657	391	1	2.10	
	221	7.92	1078	428	1	2.10	
	198	8.82	1078	476	1	2.00	
	174	10.08	1366	545	1	1.54	
	157	11.18	1366	604	1	1.35	
	141	12.40	1366	670	1	1.07	

(B) - See footnotes page on inside back cover

ILH integral gearmotors

1750 RPM - 60 Hz

Input power (Hp)	Speed (RPM)	Ratio	OHL (LBF) (B)	Output torque (in-lb)	Gear stage	Service factor (SF)	Catalog number
1.5 (cont.)	346	5.06	1466	273	2	3.34	H_682GH90H4
	295	5.93	1466	320	2	3.34	
	180	9.73	1057	526	2	3.33	
	153	11.40	962	616	2	3.34	
	129	13.59	962	734	2	3.34	
	119	14.74	962	796	2	3.34	H_682GH90H4
	106	16.45	962	889	2	3.33	
	98	17.82	1306	963	2	3.33	
	87	20.20	1306	1091	2	3.29	
	80	21.76	1306	1175	2	3.17	
	74	23.53	1306	1271	2	3.04	
	68	25.55	1306	1380	2	2.91	
	62	28.25	1940	1526	2	2.75	
	57	30.60	1940	1653	2	2.63	
	51	34.49	1940	1863	2	2.46	
	46	37.76	1940	2040	2	2.34	
	42	42.06	1940	2272	2	2.19	
	36	48.09	2765	2598	2	2.03	
	46	37.80	1940	2042	3	3.34	H_683GH90H4
	39	45.41	2765	2453	3	2.89	
	33	53.47	2765	2888	3	2.45	
	29	59.91	2765	3236	3	2.19	
	26	67.14	2765	3627	3	1.95	
	24	73.30	3091	3960	3	1.79	
	22	80.46	3091	4346	3	1.63	
	20	88.59	3091	4786	3	1.48	
	18	96.16	3091	5195	3	1.36	
	17	104.80	3091	5662	3	1.25	
	15	114.78	3170	6200	3	1.14	
	14	126.41	3170	6829	3	1.04	
	608	2.88	487	156	1	3.33	H_881GH90H4
	530	3.30	617	178	1	3.33	
	449	3.90	690	211	1	3.33	
	414	4.23	783	229	1	3.33	
	372	4.70	783	254	1	3.23	
	343	5.11	1221	276	1	3.12	
	310	5.65	1221	305	1	2.97	
	289	6.06	1221	327	1	2.86	
	268	6.53	1440	353	1	2.75	
	247	7.07	1440	382	1	2.64	
	228	7.69	1690	415	1	2.52	
	208	8.42	1690	455	1	2.39	
	185	9.46	1690	511	1	2.24	
	169	10.33	1882	558	1	2.14	
	137	12.75	2954	689	2	3.34	H_882GH90H4
	120	14.63	2954	791	2	3.34	
	101	17.27	2954	933	2	3.34	
	93	18.72	3437	1011	2	3.34	
	84	20.81	3437	1124	2	3.34	
	77	22.61	3437	1221	2	3.34	
	70	25.01	3437	1351	2	3.34	
	65	26.85	3437	1450	2	3.34	
	60	28.93	4471	1563	2	3.22	
	56	31.32	4471	1692	2	3.09	
	51	34.07	4471	1840	2	2.94	
	47	37.27	4471	2014	2	2.80	
	42	41.90	4471	2264	2	2.63	
	38	45.76	4856	2472	2	2.50	
	34	50.73	4856	2740	2	2.35	

ILH integral gearmotors

1750 RPM - 60 Hz

Input power (Hp)	Speed (RPM)	Ratio	OHL (LBF) (B)	Output torque (in-lb)	Gear stage	Service factor (SF)	Catalog number
1.5 (cont.)	35	49.42	4856	2670	3	3.34	H_883GH90H4
	30	57.93	4856	3130	3	3.34	
	25	69.05	4856	3730	3	3.34	
	23	74.88	4856	4045	3	3.34	
	21	83.58	4856	4515	3	3.29	
	19	90.53	4856	4891	3	3.04	
	17	102.61	4856	5543	3	2.68	
	16	110.54	4856	5971	3	2.49	
	15	119.52	4856	6457	3	2.30	
	13	129.79	4856	7011	3	2.12	
	12	143.50	4856	7752	3	1.92	
	11	155.46	4856	8398	3	1.77	
	10	175.18	4856	9463	3	1.57	
	9	191.80	4856	10361	3	1.44	
	8	213.64	4856	11541	3	1.29	
	7	244.29	4856	13197	3	1.13	
	6	270.90	4856	14634	3	1.02	
	5.3	332.46	4856	14870	4	0.83	H_884GH90H4
	5.0	350.43	4856	14870	4	0.79	
	4.9	358.15	4856	14870	4	0.77	
	4.4	397.10	4856	14870	4	0.69	
	24	71.59	7343	3867	3	3.34	H_1083GH90H4
	21	82.14	7343	4437	3	3.34	
	18	96.94	7343	5237	3	3.34	
	17	105.08	7343	5676	3	3.34	
	15	116.83	7343	6311	3	3.34	
	14	126.90	7343	6855	3	3.34	
	12	140.37	7343	7583	3	3.34	
	12	150.70	7343	8141	3	3.34	
	11	162.40	7343	8773	3	3.13	
	10	175.78	7343	9496	3	2.89	
	9	191.21	7343	10329	3	2.66	
	8	209.21	7343	11302	3	2.43	
	7	235.19	7343	12705	3	2.16	
	7	256.86	7343	13876	3	1.98	
	6	284.73	7343	15381	3	1.78	
	5	325.21	7343	17569	3	1.56	
	5	359.30	7343	19410	3	1.41	
	6.9	253.24	7343	13681	4	2.01	H_1084GH90H4
	6.6	266.13	7343	14377	4	1.91	
	6.0	292.42	7343	15797	4	1.74	
	5.2	338.29	7343	18275	4	1.50	
	5.1	345.81	7343	18681	4	1.47	
	4.9	363.19	7343	19620	4	1.40	
	4.6	378.53	7343	20449	4	1.34	
	4.1	423.63	7343	22885	4	1.20	
	4.0	438.48	7343	23687	4	1.16	
	3.8	460.82	7343	24894	4	1.10	
	3.6	485.47	7343	26226	4	1.05	
	3.2	543.23	7343	27438	4	0.93	
	3.1	564.07	7343	27438	4	0.90	
	2.8	625.78	7343	27438	4	0.81	
	2.8	635.01	7343	27438	4	0.80	
	2.4	739.98	7343	27438	4	0.69	
	2.3	757.74	7343	27438	4	0.67	
	22	78.06	8992	4217	3	3.34	H_1283GH90H4
	20	88.46	8992	4779	3	3.34	
	17	103.80	8992	5608	3	3.34	
	15	113.24	8992	6117	3	3.34	
	14	123.53	8992	6673	3	3.34	
	13	133.30	8992	7201	3	3.34	
	12	148.99	8992	8048	3	3.34	
	11	159.60	8992	8622	3	3.34	
	10	171.62	8992	9271	3	3.21	
	9	185.36	8992	10014	3	3.07	
	9	201.22	8992	10870	3	2.93	
	8	219.72	8992	11869	3	2.79	
	7	245.93	8992	13286	3	2.62	
	7	268.16	8992	14486	3	2.49	

(B) - See footnotes page on inside back cover

ILH integral gearmotors

1750 RPM - 60 Hz

Input power (Hp)	Speed (RPM)	Ratio	OHL (LBF) (B)	Output torque (in-lb)	Gear stage	Service factor (SF)	Catalog number
1.5 (cont.)	5.5	320.74	8992	17327	4	2.61	H_1284GH90H4
	5.3	327.50	8992	17692	4	2.55	
	4.7	375.07	8992	20262	4	2.23	
	4.6	381.71	8992	20620	4	2.19	
	4.2	418.40	8992	22603	4	2.00	
	4.1	426.18	8992	23023	4	1.96	
	3.7	473.33	8992	25570	4	1.77	
	3.6	493.16	8992	26641	4	1.69	
	3.3	530.31	8992	28648	4	1.58	
	3.2	550.62	8992	29745	4	1.52	
	2.9	614.50	8992	33196	4	1.36	
	2.8	631.72	8992	34126	4	1.32	
	2.5	714.49	8992	38598	4	1.17	
	2.2	798.59	8992	43141	4	1.05	H_1284GH90H4
	2.1	818.73	8992	44229	4	1.02	
	1.9	919.88	8992	45140	4	0.91	
	1.9	944.83	8992	45140	4	0.88	
	1.7	1055.74	8992	45140	4	0.79	
	1.6	1101.80	8992	45140	4	0.76	
	1.5	1191.22	8992	45140	4	0.70	
	1.4	1240.81	8992	45140	4	0.67	
	5.1	343.61	11827	18562	4	3.81	H_1484GH90H4
	4.6	381.21	12725	20594	4	3.44	
	4.1	425.63	12725	22993	4	3.08	
	3.9	446.17	12725	24102	4	2.94	
	3.6	483.21	12725	26104	4	2.71	
	3.4	523.09	12725	28258	4	2.51	
	3.1	562.57	12725	30391	4	2.33	
	2.9	608.21	12725	32857	4	2.16	
	2.7	638.35	12725	34485	4	2.05	
	2.5	693.49	12725	37463	4	1.89	
	2.4	730.35	12725	39455	4	1.79	
	2.1	838.20	12725	45281	4	1.56	
	2.0	889.38	12725	48046	4	1.47	
	1.8	951.58	12725	51406	4	1.38	
	1.7	1039.62	12725	56162	4	1.26	
	1.6	1095.38	12725	59174	4	1.20	
	1.6	1106.44	12725	59771	4	1.18	
	1.5	1202.94	12725	64985	4	1.09	
	1.4	1255.67	12725	67833	4	1.04	
	1.3	1397.42	12725	70808	4	0.94	
	1.1	1576.31	12725	70808	4	0.83	
	1.1	1615.18	12725	70808	4	0.81	
	1.0	1841.48	12725	70808	4	0.71	
	0.94	1869.52	12725	70808	4	0.70	
	5.3	332.11	17770	17941	4	6.91	H_1684GH90H4
	4.7	370.81	17770	20031	4	6.19	
	4.4	401.98	17770	21715	4	5.71	
	4.1	426.39	17770	23034	4	5.38	
	3.8	462.23	17770	24970	4	4.96	
	3.6	487.42	17770	26331	4	4.71	
	3.3	528.39	17770	28544	4	4.34	
	3.1	564.83	17770	30513	4	4.06	
	2.8	615.41	17770	33245	4	3.73	
	2.5	694.17	17770	37500	4	3.30	
	2.2	782.02	17770	42246	4	2.93	
	2.0	893.72	17770	48280	4	2.57	
	1.7	1037.72	17770	56059	4	2.21	
	1.5	1167.03	17770	63045	4	1.97	
	1.3	1328.86	17770	71787	4	1.73	
	1.1	1545.11	17770	83469	4	1.48	
	1.0	1711.49	17770	92457	4	1.34	
	0.90	1939.74	17770	104787	4	1.18	
	0.80	2193.14	17770	118476	4	1.05	
	0.69	2551.01	17770	123914	4	0.90	

(B) - See footnotes page on inside back cover

ILH integral gearmotors

1750 RPM - 60 Hz

Input power (Hp)	Speed (RPM)	Ratio	OHL (LBF) (B)	Output torque (in-lb)	Gear stage	Service factor (SF)	Catalog number
1.5 (cont.)	0.70	2517.61	17770	123914	5	0.91	H_1685GH90H4
	0.60	2908.07	17770	123914	5	0.79	
	0.53	3307.14	17770	123914	5	0.69	
2	1100	1.6	–	115	1	2.42	H_381GH90I4
	946	1.9	–	133	1	2.30	
	853	2.1	–	148	1	2.21	
	783	2.2	50	161	1	2.13	
	700	2.5	102	180	1	2.03	
	640	2.7	102	197	1	1.95	
	583	3.0	211	216	1	1.86	
	529	3.3	269	238	1	1.77	
	477	3.7	258	264	1	1.68	
	421	4.2	371	299	1	1.58	H_381GH90I4
	382	4.6	371	330	1	1.50	
	338	5.2	543	373	1	1.40	
	296	6.0	543	426	1	1.10	
	367	4.77	518	344	2	2.50	H_382GH90I4
	315	5.55	518	400	2	2.50	
	284	6.16	518	444	2	2.50	
	261	6.71	518	483	2	2.49	
	233	7.50	279	540	2	2.38	
	233	7.52	279	542	2	2.50	
	200	8.75	279	630	2	2.50	
	180	9.70	279	699	2	2.43	
	166	10.57	279	761	2	2.30	
	148	11.82	416	851	2	2.13	
	135	12.92	416	931	2	2.01	
	123	14.18	416	1021	2	1.88	
	112	15.64	416	1126	2	1.73	
	101	17.33	416	1248	2	1.56	
	89	19.64	546	1414	2	1.38	
	81	21.67	546	1561	2	1.25	
	71	24.50	546	1764	2	1.10	
	1151	1.52	–	109	1	2.50	H_481GH90I4
	958	1.83	–	132	1	2.50	
	814	2.15	190	155	1	2.50	
	726	2.41	195	174	1	2.50	
	648	2.70	161	194	1	2.43	
	594	2.95	124	212	1	2.35	
	541	3.24	106	233	1	2.26	
	491	3.56	99	257	1	2.16	
	453	3.87	99	279	1	2.08	
	415	4.21	191	304	1	1.99	
	379	4.62	191	332	1	1.90	
	344	5.08	303	366	1	1.81	
	299	5.85	303	421	1	1.68	
	276	6.33	627	456	1	1.61	
	250	7.00	627	504	1	1.52	
	214	8.17	711	588	1	1.28	

(B) - See footnotes page on inside back cover

ILH integral gearmotors

1750 RPM - 60 Hz

Input power (Hp)	Speed (RPM)	Ratio	OHL (LBF) (B)	Output torque (in-lb)	Gear stage	Service factor (SF)	Catalog number
2 (cont.)	409	4.28	896	309	2	2.51	H_482GH90I4
	340	5.15	904	371	2	2.50	
	289	6.06	904	436	2	2.50	
	258	6.79	904	489	2	2.50	
	254	6.90	904	497	2	2.50	
	211	8.29	919	597	2	2.50	
	179	9.76	919	703	2	2.50	
	160	10.93	937	788	2	2.50	
	143	12.25	937	883	2	2.50	
	131	13.38	937	963	2	2.50	
	119	14.68	937	1058	2	2.50	
	108	16.17	937	1165	2	2.50	
	100	17.55	1142	1264	2	2.43	
	91	19.13	1142	1378	2	2.33	
	84	20.95	1142	1509	2	2.22	
	76	23.07	1142	1662	2	2.11	
	66	26.53	1142	1911	2	1.96	
	61	28.74	1517	2070	2	1.89	
	55	31.77	1517	2288	2	1.74	
	47	37.06	1517	2670	2	1.49	
	42	41.26	1517	2972	2	1.34	
	39	45.38	1884	3269	2	1.22	
	49	35.59	1517	2563	3	1.55	H_483GH90I4
	42	41.38	1517	2981	3	1.34	
	38	45.91	1884	3307	3	1.20	
	35	50.00	1884	3601	3	1.11	
	319	5.48	875	395	2	2.51	H_582GH90I4
	282	6.21	925	447	2	2.51	
	197	8.86	925	638	2	2.51	
	174	10.04	1025	723	2	2.51	
	143	12.26	1200	883	2	2.51	
	132	13.29	1275	957	2	2.51	H_582GH90I4
	116	15.09	1400	1087	2	2.51	
	109	16.13	1450	1162	2	2.51	
	96	18.3	1600	1318	2	2.51	
	89	19.74	1650	1422	2	2.51	
	82	21.37	1750	1539	2	2.51	
	75	23.24	1850	1674	2	2.51	
	68	25.75	1950	1855	2	2.51	
	62	28.29	2100	2038	2	2.51	
	55	31.55	2200	2273	2	2.3	
	51	34.57	2200	2490	2	2.15	
	46	38.14	2200	2747	2	1.95	
	40	43.61	2200	3141	2	1.7	
	36	49.29	2200	3550	2	1.52	
	32	54.69	2200	3939	2	1.37	
	51	34.27	2200	2468	3	2.15	H_583GH90I4
	41	42.99	2200	3097	3	1.74	
	37	47.77	2200	3441	3	1.57	
	32	54.94	2200	3957	3	1.37	
	30	59.09	2200	4256	3	1.27	
	25	68.85	2200	4959	3	1.09	
	23	74.64	2200	5376	3	1.01	

(B) - See footnotes page on inside back cover

ILH integral gearmotors

1750 RPM - 60 Hz

Input power (Hp)	Speed (RPM)	Ratio	OHL (LBF) (B)	Output torque (in-lb)	Gear stage	Service factor (SF)	Catalog number
	858	2.04	140	147	1	2.50	
	732	2.39	111	172	1	2.50	
	614	2.85	52	205	1	2.50	
	566	3.09	52	223	1	2.43	
	507	3.45	68	249	1	2.32	
	468	3.74	73	269	1	2.24	
	413	4.24	160	305	1	2.11	
	384	4.56	160	329	1	2.03	
	355	4.93	453	355	1	1.95	**H_681GH90I4**
	327	5.36	453	386	1	1.87	
	295	5.92	453	427	1	1.76	
	273	6.42	657	462	1	1.69	
	242	7.23	657	521	1	1.58	
	221	7.92	1078	570	1	1.50	
	198	8.82	1078	635	1	1.40	
	174	10.08	1366	726	1	1.16	
	157	11.18	1366	805	1	1.01	
	346	5.06	1466	364	2	2.50	
	295	5.93	1466	427	2	2.50	
	180	9.73	1057	701	2	2.50	
	153	11.40	962	821	2	2.50	
	129	13.59	962	979	2	2.50	
	119	14.74	962	1062	2	2.50	
	106	16.45	962	1185	2	2.50	
	98	17.82	1306	1284	2	2.50	
	87	20.20	1306	1455	2	2.47	**H_682GH90I4**
	80	21.76	1306	1567	2	2.38	
	74	23.53	1306	1695	2	2.28	
	68	25.55	1306	1840	2	2.18	
	62	28.25	1940	2035	2	2.06	
	57	30.60	1940	2204	2	1.97	
	51	34.49	1940	2484	2	1.84	
	46	37.76	1940	2720	2	1.75	
2 (cont.)	42	42.06	1940	3029	2	1.64	
	36	48.09	2765	3464	2	1.52	
	46	37.80	1940	2723	3	2.50	
	39	45.41	2765	3271	3	2.16	
	33	53.47	2765	3851	3	1.84	
	29	59.91	2765	4315	3	1.64	
	26	67.14	2765	4836	3	1.46	**H_683GH90I4**
	24	73.30	3091	5279	3	1.34	
	22	80.46	3091	5795	3	1.22	
	20	88.59	3091	6381	3	1.11	
	18	96.16	3091	6926	3	1.02	
	343	5.11	1221	368	1	2.34	
	310	5.65	1221	407	1	2.23	
	289	6.06	1221	437	1	2.15	
	268	6.53	1440	471	1	2.07	**H_881GH90I4**
	248	7.07	1440	509	1	1.98	
	228	7.69	1690	554	1	1.89	
	208	8.42	1690	606	1	1.80	
	185	9.46	1690	682	1	1.68	**H_881GH90I4**
	169	10.33	1882	744	1	1.61	
	137	12.75	2954	919	2	2.50	
	120	14.63	2954	1054	2	2.50	
	101	17.27	2954	1244	2	2.50	
	93	18.72	3437	1348	2	2.50	
	84	20.81	3437	1499	2	2.50	
	77	22.61	3437	1628	2	2.50	
	70	25.01	3437	1801	2	2.50	
	65	26.85	3437	1934	2	2.50	**H_882GH90I4**
	60	28.93	4471	2084	2	2.42	
	56	31.32	4471	2256	2	2.31	
	51	34.07	4471	2454	2	2.21	
	47	37.27	4471	2685	2	2.10	
	42	41.90	4471	3018	2	1.97	
	38	45.76	4856	3296	2	1.88	
	34	50.73	4856	3654	2	1.76	

(B) - See footnotes page on inside back cover

ILH integral gearmotors

1750 RPM - 60 Hz

Input power (Hp)	Speed (RPM)	Ratio	OHL (LBF) (B)	Output torque (in-lb)	Gear stage	Service factor (SF)	Catalog number
2 (cont.)	35	49.42	4856	3560	3	2.50	H_883GH90I4
	30	57.93	4856	4173	3	2.50	
	25	69.05	4856	4973	3	2.50	
	23	74.88	4856	5394	3	2.50	
	21	83.58	4856	6020	3	2.47	
	19	90.53	4856	6521	3	2.28	
	17	102.61	4856	7391	3	2.01	
	16	110.54	4856	7962	3	1.87	
	15	119.52	4856	8609	3	1.73	
	13	129.79	4856	9348	3	1.59	
	12	143.50	4856	10336	3	1.44	
	11	155.46	4856	11197	3	1.33	
	10	175.18	4856	12618	3	1.18	
	9	191.80	4856	13815	3	1.08	
	24	71.59	7343	5156	3	2.50	H_1083GH90I4
	21	82.14	7343	5916	3	2.50	
	18	96.94	7343	6983	3	2.50	
	17	105.08	7343	7569	3	2.50	
	15	116.83	7343	8415	3	2.50	
	14	126.90	7343	9141	3	2.50	
	12	140.37	7343	10111	3	2.50	
	12	150.70	7343	10854	3	2.50	
	11	162.40	7343	11697	3	2.35	
	10	175.78	7343	12661	3	2.17	
	9	191.21	7343	13772	3	1.99	
	8	209.21	7343	15069	3	1.82	
	7	235.19	7343	16940	3	1.62	
	7	256.86	7343	18501	3	1.48	
	6	284.73	7343	20508	3	1.34	
	5	325.21	7343	23425	3	1.17	
	5	359.30	7343	25880	3	1.06	
	6.9	253.24	7343	18241	4	1.50	H_1084GH90I4
	6.6	266.13	7343	19169	4	1.43	
	6.0	292.42	7343	21062	4	1.30	
	5.2	338.29	7343	24367	4	1.13	
	5.1	345.81	7343	24908	4	1.10	
	4.8	363.19	7343	26160	4	1.05	
	4.6	378.53	7343	27265	4	1.01	
	4.1	423.63	7343	27438	4	0.90	
	4.0	438.48	7343	27438	4	0.87	
	3.9	460.82	7343	27438	4	0.83	
	3.6	485.47	7343	27438	4	0.78	
	22	78.06	8992	5623	3	2.50	H_1283GH90I4
	20	88.46	8992	6371	3	2.50	
	17	103.80	8992	7477	3	2.50	
	15	113.24	8992	8156	3	2.50	
	14	123.53	8992	8897	3	2.50	
	13	133.30	8992	9602	3	2.50	
	12	148.99	8992	10731	3	2.50	
	11	159.60	8992	11495	3	2.50	
	10	171.62	8992	12362	3	2.41	
	9	185.36	8992	13351	3	2.30	
	9	201.22	8992	14493	3	2.20	
	8	219.72	8992	15826	3	2.09	
	7	245.93	8992	17714	3	1.96	
	7	268.16	8992	19315	3	1.87	H_1283GH90I4

(B) - See footnotes page on inside back cover

ILH integral gearmotors

1750 RPM - 60 Hz

Input power (Hp)	Speed (RPM)	Ratio	OHL (LBF) (B)	Output torque (in-lb)	Gear stage	Service factor (SF)	Catalog number
	5.5	320.74	8992	23103	4	1.95	
	5.3	327.50	8992	23589	4	1.91	
	4.7	375.07	8992	27016	4	1.67	
	4.6	381.71	8992	27494	4	1.64	
	4.2	418.40	8992	30137	4	1.50	
	4.1	426.18	8992	30697	4	1.47	
	3.7	473.33	8992	34093	4	1.32	
	3.6	493.16	8992	35522	4	1.27	**H_1284GH90I4**
	3.3	530.31	8992	38197	4	1.18	
	3.2	550.62	8992	39660	4	1.14	
	2.9	614.50	8992	44261	4	1.02	
	2.8	631.72	8992	45140	4	0.99	
	2.5	714.49	8992	45140	4	0.88	
	2.2	798.59	8992	45140	4	0.78	
	2.1	818.73	8992	45140	4	0.77	
	5.1	343.61	11827	24750	4	2.86	
	4.6	381.21	12725	27458	4	2.58	
	4.1	425.63	12725	30657	4	2.31	
	3.9	446.17	12725	32137	4	2.20	
	3.6	483.21	12725	34805	4	2.03	
	3.4	523.09	12725	37677	4	1.88	
	3.1	562.57	12725	40521	4	1.75	
	2.9	608.21	12725	43809	4	1.62	
	2.7	638.35	12725	45980	4	1.54	
	2.5	693.49	12725	49951	4	1.42	**H_1484GH90I4**
	2.4	730.35	12725	52606	4	1.35	
2 (cont.)	2.1	838.20	12725	60374	4	1.17	
	2.0	889.38	12725	64061	4	1.11	
	1.8	951.58	12725	68541	4	1.03	
	1.7	1039.62	12725	70808	4	0.95	
	1.6	1095.38	12725	70808	4	0.90	
	1.6	1106.44	12725	70808	4	0.89	
	1.5	1202.94	12725	70808	4	0.82	
	1.4	1255.67	12725	70808	4	0.78	
	5.3	332.11	17770	23922	4	5.18	
	4.7	370.81	17770	26709	4	4.64	
	4.4	401.98	17770	28954	4	4.28	
	4.1	426.39	17770	30712	4	4.03	
	3.8	462.23	17770	33294	4	3.72	
	3.6	487.42	17770	35108	4	3.53	
	3.3	528.39	17770	38059	4	3.26	
	3.1	564.83	17770	40684	4	3.05	
	2.8	615.41	17770	44327	4	2.80	
	2.5	694.17	17770	50000	4	2.48	**H_1684GH90I4**
	2.3	782.02	17770	56328	4	2.20	
	2.0	893.72	17770	64373	4	1.92	
	1.7	1037.72	17770	74745	4	1.66	
	1.5	1167.03	17770	84059	4	1.47	
	1.3	1328.86	17770	95716	4	1.29	
	1.1	1545.11	17770	111292	4	1.11	
	1.0	1711.49	17770	123276	4	1.01	
	0.90	1939.74	17770	123914	4	0.89	
	0.80	2193.14	17770	123914	4	0.78	
	1100	1.59	–	172	1	2.96	
	946	1.85	–	200	1	2.79	
	853	2.05	–	222	1	2.67	
	783	2.24	50	242	1	2.58	
	700	2.50	102	270	1	2.39	
	640	2.73	102	295	1	2.35	
3	583	3.00	211	324	1	2.18	**H_381GH100J4**
	529	3.31	269	357	1	1.61	
	477	3.67	258	396	1	1.56	
	421	4.15	371	449	1	1.22	
	382	4.58	371	495	1	1.39	
	338	5.18	543	560	1	1.11	
	367	4.77	518	516	2	2.40	**H_382GH100J4**

(B) - See footnotes page on inside back cover

ILH integral gearmotors

1750 RPM - 60 Hz

Input power (Hp)	Speed (RPM)	Ratio	OHL (LBF) (B)	Output torque (in-lb)	Gear stage	Service factor (SF)	Catalog number
3 (cont.)	315	5.55	518	600	2	2.27	H_382GH100J4
	284	6.16	518	665	2	2.12	
	261	6.71	518	725	2	2.00	
	233	7.50	279	810	2	1.86	
	233	7.52	279	813	2	1.92	
	200	8.75	279	945	2	1.73	
	180	9.70	279	1048	2	1.62	
	166	10.57	279	1142	2	1.53	
	148	11.82	416	1277	2	1.42	
	135	12.92	416	1396	2	1.34	
	123	14.18	416	1532	2	1.26	
	112	15.64	416	1689	2	1.15	
	101	17.33	416	1873	2	1.04	
	1151	1.52	–	164	1	3.45	H_481GH100J4
	958	1.83	–	197	1	3.41	
	814	2.15	190	232	1	3.22	
	726	2.41	195	260	1	3.08	
	648	2.70	161	292	1	2.94	
	594	2.95	124	318	1	2.83	
	541	3.24	106	350	1	2.71	
	491	3.56	99	385	1	2.59	
	453	3.87	99	418	1	2.49	
	415	4.21	191	455	1	2.39	
	379	4.62	191	499	1	2.30	
	344	5.08	303	549	1	1.93	
	299	5.85	303	632	1	1.68	
	276	6.33	627	684	1	1.49	
	250	7.00	627	756	1	1.14	
	409	4.28	896	463	2	3.46	H_482GH100J4
	340	5.15	904	556	2	3.45	
	289	6.06	904	655	2	3.45	
	258	6.79	904	734	2	3.26	
	254	6.90	904	745	2	3.45	
	211	8.29	919	895	2	3.26	
	179	9.76	919	1054	2	2.93	
	160	10.93	937	1181	2	2.72	
	143	12.25	937	1324	2	2.52	
	131	13.38	937	1445	2	2.37	
	119	14.68	937	1586	2	2.23	
	108	16.17	937	1747	2	2.09	
	100	17.55	1142	1896	2	1.97	
	91	19.13	1142	2066	2	1.86	
	84	20.95	1142	2263	2	1.75	
	76	23.07	1142	2493	2	1.60	
	66	26.53	1142	2867	2	1.39	
	61	28.74	1517	3106	2	1.28	
	55	31.77	1517	3432	2	1.16	
	49	35.59	1517	3845	3	1.04	H_483GH100J4
	471	3.71	800	401	2	3.45	H_582GH100J4
	400	4.38	875	473	2	3.45	
	319	5.48	875	592	2	3.45	
	282	6.21	925	671	2	3.45	
	247	7.07	925	764	2	3.45	
	197	8.86	1025	957	2	3.45	
	174	10.04	1200	1085	2	3.45	
	143	12.26	1275	1325	2	3.45	
	132	13.29	1400	1436	2	3.45	
	116	15.09	1450	1630	2	3.07	
	109	16.13	1600	1743	2	2.9	
	96	18.3	1650	1977	2	2.57	
	89	19.74	1750	2133	2	2.4	
	82	21.37	1850	2309	2	2.23	
	75	23.24	1950	2511	2	2.07	
	68	25.75	2100	2782	2	1.87	
	62	28.29	2200	3057	2	1.7	
	55	31.55	2200	3409	2	1.53	
	51	34.57	2200	3735	2	1.43	
	46	38.14	2200	4121	2	1.3	

(B) - See footnotes page on inside back cover

ILH integral gearmotors

1750 RPM - 60 Hz

Input power (Hp)	Speed (RPM)	Ratio	OHL (LBF) (B)	Output torque (in-lb)	Gear stage	Service factor (SF)	Catalog number
	51	34.27	2200	3703	3	1.43	
	41	42.99	2200	4645	3	1.16	**H_583GH100J4**
	37	47.77	2200	5161	3	1.05	
	1242	1.41	–	152	1	3.45	
	1029	1.70	–	184	1	3.45	
	858	2.04	140	220	1	3.45	
	732	2.39	111	258	1	3.30	
	614	2.85	52	308	1	3.08	
	566	3.09	52	334	1	2.97	
	507	3.45	68	373	1	2.82	**H_681GH100J4**
	468	3.74	73	404	1	2.72	
	413	4.24	160	458	1	2.55	
	384	4.56	160	493	1	2.45	
	355	4.93	453	533	1	2.35	
	327	5.36	453	579	1	2.26	
	296	5.92	453	640	1	2.15	
	273	6.42	657	693	1	2.07	
	242	7.23	657	781	1	1.70	**H_681GH100J4**
	221	7.92	1078	855	1	1.76	
	198	8.82	1078	953	1	1.39	
	501	3.49	1498	378	2	3.46	
	415	4.22	1473	456	2	3.45	
	346	5.06	1466	547	2	3.45	
	295	5.93	1466	641	2	3.45	
	260	6.72	1466	726	2	3.45	
	216	8.11	1057	876	2	3.45	
	180	9.73	1057	1051	2	3.45	
	153	11.40	962	1232	2	3.45	
	129	13.59	962	1469	2	3.45	
	119	14.74	962	1593	2	3.45	
	106	16.45	962	1778	2	3.32	**H_682GH100J4**
	98	17.82	1306	1926	2	3.19	
	87	20.20	1306	2182	2	2.99	
	80	21.76	1306	2351	2	2.88	
3 (cont.)	74	23.53	1306	2542	2	2.76	
	68	25.55	1306	2760	2	2.57	
	62	28.25	1940	3052	2	2.32	
	57	30.60	1940	3306	2	2.14	
	51	34.49	1940	3726	2	1.90	
	46	37.76	1940	4079	2	1.74	
	42	42.06	1940	4544	2	1.56	
	46	37.80	1940	4084	3	1.73	
	39	45.41	2765	4906	3	1.44	**H_683GH100J4**
	33	53.47	2765	5777	3	1.23	
	29	59.91	2765	6473	3	1.09	
	268	6.53	1440	706	1	2.68	
	248	7.07	1440	764	1	2.58	
	228	7.69	1690	831	1	2.48	**H_881GH100J4**
	208	8.42	1690	909	1	2.38	
	185	9.46	1690	1022	1	1.82	
	169	10.33	1882	1116	1	1.82	
	295	5.94	2656	642	2	3.45	
	252	6.96	2656	752	2	3.45	
	189	9.26	2252	1000	2	3.45	
	161	10.85	2252	1172	2	3.45	
	137	12.75	2954	1378	2	3.45	
	120	14.63	2954	1581	2	3.45	
	101	17.27	2954	1866	2	3.45	
	93	18.72	3437	2023	2	3.45	
	84	20.81	3437	2249	2	3.45	
	77	22.61	3437	2443	2	3.45	**H_882GH100J4**
	70	25.01	3437	2702	2	3.38	
	65	26.85	3437	2901	2	3.19	
	60	28.93	4471	3126	2	3.00	
	56	31.32	4471	3384	2	2.82	
	51	34.07	4471	3681	2	2.62	
	47	37.27	4471	4027	2	2.43	
	42	41.90	4471	4527	2	2.20	
	38	45.76	4856	4944	2	2.04	
	34	50.73	4856	5481	2	1.86	

(B) - See footnotes page on inside back cover

ILH integral gearmotors

1750 RPM - 60 Hz

Input power (Hp)	Speed (RPM)	Ratio	OHL (LBF) (B)	Output torque (in-lb)	Gear stage	Service factor (SF)	Catalog number
3 (cont.)	51	34.14	4471	3688	3	3.45	H_883GH100J4
	42	41.19	4471	4450	3	3.34	
	35	49.42	4856	5340	3	2.79	
	30	57.93	4856	6259	3	2.38	
	25	69.05	4856	7460	3	1.99	H_883GH100J4
	23	74.88	4856	8091	3	1.84	
	21	83.58	4856	9031	3	1.65	
	19	90.53	4856	9781	3	1.52	
	17	102.61	4856	11086	3	1.34	
	16	110.54	4856	11943	3	1.25	
	15	119.52	4856	12913	3	1.15	
	13	129.79	4856	14023	3	1.06	
	34	51.97	6261	5615	3	3.45	
	29	60.90	6261	6580	3	3.45	
	24	71.59	7343	7735	3	3.45	
	21	82.14	7343	8874	3	3.09	
	18	96.94	7343	10474	3	2.62	H_1083GH100J4
	17	105.08	7343	11353	3	2.42	
	15	116.83	7343	12622	3	2.17	
	14	126.90	7343	13711	3	2.00	
	12	140.37	7343	15166	3	1.81	
	12	150.70	7343	16282	3	1.69	
	11	162.40	7343	17546	3	1.56	
	10	175.78	7343	18991	3	1.44	
	9	191.21	7343	20659	3	1.33	
	8	209.21	7343	22604	3	1.21	
	7	235.19	7343	25410	3	1.08	
	6.9	253.24	7343	27361	4	1.00	H_1084GH100J4
	6.6	266.13	7343	27438	4	0.95	
	6.0	292.42	7343	27438	4	0.87	
	5.2	338.29	7343	27438	4	0.75	
	5.1	345.81	7343	27438	4	0.73	
	4.8	363.19	7343	27438	4	0.70	
	4.6	378.53	7343	27438	4	0.67	
	30	57.56	7974	6219	3	3.45	H_1283GH100J4
	26	66.43	7974	7178	3	3.45	
	22	78.06	8992	8434	3	3.45	
	20	88.46	8992	9557	3	3.45	
	17	103.80	8992	11215	3	3.45	
	15	113.24	8992	12235	3	3.45	
	14	123.53	8992	13346	3	3.38	
	13	133.30	8992	14403	3	3.13	
	12	148.99	8992	16097	3	2.80	
	11	159.60	8992	17243	3	2.62	
	10	171.62	8992	18542	3	2.43	
	9	185.36	8992	20027	3	2.25	
	9	201.22	8992	21740	3	2.08	
	8	219.72	8992	23739	3	1.90	
	7	245.93	8992	26571	3	1.70	
	7	268.16	8992	28972	3	1.56	
	5.5	320.74	8992	34654	4	1.30	H_1284GH100J4
	5.3	327.50	8992	35384	4	1.28	
	4.7	375.07	8992	40524	4	1.11	
	4.6	381.71	8992	41241	4	1.09	
	4.2	418.40	8992	45140	4	1.00	
	4.1	426.18	8992	45140	4	0.98	
	3.7	473.33	8992	45140	4	0.88	
	3.6	493.16	8992	45140	4	0.85	
	3.3	530.31	8992	45140	4	0.79	
	3.2	550.62	8992	45140	4	0.76	
	2.9	614.50	8992	45140	4	0.68	

(B) - See footnotes page on inside back cover

ILH integral gearmotors

1750 RPM - 60 Hz

Input power (Hp)	Speed (RPM)	Ratio	OHL (LBF) (B)	Output torque (in-lb)	Gear stage	Service factor (SF)	Catalog number
	22	81.04	11827	8756	3	3.45	
	19	92.91	11827	10039	3	3.45	
	16	111.50	12725	12046	3	3.45	
	14	123.37	12725	13330	3	3.45	
	12	144.39	12725	15600	3	3.45	
	11	156.38	12725	16895	3	3.45	
	10	174.53	12725	18856	3	3.45	
	9	185.03	12725	19991	3	3.34	**H_1483GH100J4**
	8	209.76	12725	22663	3	3.01	
	8	224.43	12725	24249	3	2.85	
	7	236.05	12725	25503	3	2.73	
	7	254.70	12725	27519	3	2.55	
	6	276.23	12725	29844	3	2.37	
	6	301.34	12725	32558	3	2.17	
	5	336.11	12725	36314	3	1.95	
	5.1	343.61	11827	37125	4	1.91	
	4.6	381.21	12725	41187	4	1.72	
	4.1	425.63	12725	45986	4	1.54	
	3.9	446.17	12725	48205	4	1.47	
	3.6	483.21	12725	52208	4	1.36	
	3.4	523.09	12725	56516	4	1.25	
	3.1	562.57	12725	60781	4	1.16	**H_1484GH100J4**
3 (cont.)	2.9	608.21	12725	65713	4	1.08	
	2.7	638.35	12725	68970	4	1.03	
	2.5	693.49	12725	70808	4	0.95	
	2.4	730.35	12725	70808	4	0.90	
	2.1	838.20	12725	70808	4	0.78	
	2.0	889.38	12725	70808	4	0.74	**H_1484GH100J4**
	1.8	951.58	12725	70808	4	0.69	
	5.3	332.11	17770	35882	4	3.45	
	4.7	370.81	17770	40063	4	3.09	
	4.4	401.98	17770	43431	4	2.85	
	4.1	426.39	17770	46068	4	2.69	
	3.8	462.23	17770	49940	4	2.48	
	3.6	487.42	17770	52662	4	2.35	
	3.3	528.39	17770	57088	4	2.17	
	3.1	564.83	17770	61026	4	2.03	
	2.8	615.41	17770	66491	4	1.86	**H_1684GH100J4**
	2.5	694.17	17770	75000	4	1.65	
	2.2	782.02	17770	84491	4	1.47	
	2.0	893.72	17770	96560	4	1.28	
	1.7	1037.72	17770	112118	4	1.11	
	1.5	1167.03	17770	123914	4	0.98	
	1.3	1328.86	17770	123914	4	0.86	
	1.1	1545.11	17770	123914	4	0.74	
	1.0	1711.49	17770	123914	4	0.67	
	1151	1.52	–	274	1	2.53	
	958	1.83	–	329	1	2.37	
	814	2.15	190	387	1	2.22	
	726	2.41	195	434	1	2.11	
	648	2.70	161	486	1	2.01	
	594	2.95	124	531	1	1.93	
5	541	3.24	106	583	1	1.84	**H_481GH112L4**
	491	3.56	99	642	1	1.76	
	453	3.87	99	696	1	1.70	
	415	4.21	191	759	1	1.64	
	379	4.62	191	831	1	1.38	
	344	5.08	303	915	1	1.16	
	299	5.85	303	1053	1	1.01	

(B) - See footnotes page on inside back cover

ILH integral gearmotors

1750 RPM - 60 Hz

Input power (Hp)	Speed (RPM)	Ratio	OHL (LBF) (B)	Output torque (in-lb)	Gear stage	Service factor (SF)	Catalog number
5 (cont.)	409	4.28	896	771	2	2.77	H_482GH112L4
	340	5.15	904	927	2	2.58	
	289	6.06	904	1091	2	2.19	
	258	6.79	904	1223	2	1.95	
	254	6.90	904	1242	2	2.21	
	211	8.29	919	1492	2	1.96	
	179	9.76	919	1757	2	1.76	
	160	10.93	937	1969	2	1.63	
	143	12.25	937	2207	2	1.51	
	131	13.38	937	2409	2	1.42	
	119	14.68	937	2644	2	1.34	
	108	16.17	937	2911	2	1.25	
	100	17.55	1142	3160	2	1.18	
	91	19.13	1142	3444	2	1.12	
	84	20.95	1142	3772	2	1.05	
	471	3.71	800	668	2	2.78	H_582GH112L4
	400	4.38	875	789	2	2.78	
	319	5.48	875	987	2	2.78	
	282	6.21	925	1118	2	2.78	
	247	7.07	750	1273	2	2.78	
	197	8.86	925	1595	2	2.78	
	174	10.04	1025	1808	2	2.7	
	143	12.26	1200	2208	2	2.24	
	132	13.29	1275	2393	2	2.08	
	116	15.09	1400	2717	2	1.84	
	109	16.13	1450	2905	2	1.74	H_582GH112L4
	96	18.3	1600	3295	2	1.54	
	89	19.74	1650	3555	2	1.44	
	82	21.37	1750	3848	2	1.34	
	75	23.24	1850	4185	2	1.24	
	68	25.75	1950	4637	2	1.12	
	62	28.29	2100	5094	2	1.02	
	1242	1.41	–	254	1	2.77	H_681GH112L4
	1029	1.70	–	306	1	2.77	
	858	2.04	140	367	1	2.61	
	732	2.39	111	431	1	2.47	
	614	2.85	52	513	1	2.29	
	566	3.09	52	557	1	2.21	
	507	3.45	68	621	1	2.10	
	468	3.74	73	673	1	2.02	
	413	4.24	160	763	1	1.89	
	384	4.56	160	822	1	1.83	
	355	4.93	453	888	1	1.76	
	327	5.36	453	965	1	1.70	
	296	5.92	453	1067	1	1.58	
	273	6.42	657	1156	1	1.30	
	242	7.23	657	1302	1	1.02	
	221	7.92	1078	1426	1	1.06	
	501	3.49	1498	629	2	2.78	H_682GH112L4
	415	4.22	1473	759	2	2.77	
	346	5.06	1466	911	2	2.77	
	295	5.93	1466	1068	2	2.77	
	260	6.72	1466	1210	2	2.77	
	216	8.11	1057	1460	2	2.77	
	180	9.73	1057	1752	2	2.77	
	153	11.40	962	2054	2	2.77	
	129	13.59	962	2448	2	2.75	
	119	14.74	962	2654	2	2.65	
	106	16.45	962	2963	2	2.39	
	98	17.82	1306	3209	2	2.21	
	87	20.20	1306	3637	2	1.95	
	80	21.76	1306	3918	2	1.81	
	74	23.53	1306	4237	2	1.67	
	68	25.55	1306	4601	2	1.54	
	62	28.25	1940	5087	2	1.39	
	57	30.60	1940	5511	2	1.29	
	51	34.49	1940	6210	2	1.14	
	46	37.76	1940	6799	2	1.04	

(B) - See footnotes page on inside back cover

ILH integral gearmotors

1750 RPM - 60 Hz

Input power (Hp)	Speed (RPM)	Ratio	OHL (LBF) (B)	Output torque (in-lb)	Gear stage	Service factor (SF)	Catalog number
5 (cont.)	449	3.90	690	702	1	2.53	H_881GH112L4
	414	4.23	783	761	1	2.44	
	372	4.70	783	846	1	2.32	
	343	5.11	1221	919	1	2.23	
	310	5.65	1221	1017	1	2.13	
	289	6.06	1221	1092	1	2.06	
	268	6.53	1440	1177	1	1.99	
	248	7.07	1440	1273	1	1.93	
	228	7.69	1690	1385	1	1.57	
	208	8.42	1690	1516	1	1.43	
	185	9.46	1690	1704	1	1.09	
	169	10.33	1882	1861	1	1.09	
	359	4.87	2656	877	2	2.77	H_882GH112L4
	295	5.94	2656	1069	2	2.77	
	252	6.96	2656	1253	2	2.77	
	231	7.59	2252	1367	2	2.77	
	189	9.26	2252	1667	2	2.77	
	161	10.85	2252	1954	2	2.77	
	137	12.75	2954	2297	2	2.77	
	120	14.63	2954	2635	2	2.77	
	101	17.27	2954	3110	2	2.77	
	93	18.72	3437	3371	2	2.77	
	84	20.81	3437	3748	2	2.77	
	77	22.61	3437	4071	2	2.68	
	70	25.01	3437	4503	2	2.55	
	65	26.85	3437	4835	2	2.47	
	60	28.93	4471	5210	2	2.39	
	56	31.32	4471	5639	2	2.31	
	51	34.07	4471	6134	2	2.19	H_882GH112L4
	47	37.27	4471	6712	2	2.03	
	42	41.90	4471	7545	2	1.84	
	38	45.76	4856	8240	2	1.70	
	51	34.14	4471	6147	3	2.42	H_883GH112L4
	42	41.19	4471	7416	3	2.00	
	35	49.42	4856	8900	3	1.67	
	30	57.93	4856	10432	3	1.43	
	25	69.05	4856	12433	3	1.20	
	23	74.88	4856	13484	3	1.10	
	246	7.10	3705	1279	2	2.77	H_1082GH112L4
	164	10.67	3705	1921	2	2.77	
	138	12.68	4037	2282	2	2.77	
	120	14.63	4037	2634	2	2.77	
	102	17.19	4037	3095	2	2.77	
	90	19.48	4288	3507	2	2.77	
	77	22.86	4288	4116	2	2.77	
	70	24.94	4288	4490	2	2.77	
	64	27.20	4288	4898	2	2.77	
	60	29.35	5138	5286	2	2.69	
	53	32.81	5138	5908	2	2.54	
	50	35.14	5138	6328	2	2.46	
	46	37.79	5138	6805	2	2.38	
	43	40.82	5138	7350	2	2.30	
	39	44.31	6261	7979	2	2.22	
	36	48.38	6261	8712	2	2.07	
	41	42.61	5138	7673	3	2.77	H_1083GH112L4
	34	51.97	6261	9359	3	2.77	
	29	60.90	6261	10966	3	2.50	
	24	71.59	7343	12891	3	2.13	
	21	82.14	7343	14790	3	1.86	
	18	96.94	7343	17457	3	1.57	
	17	105.08	7343	18922	3	1.45	
	15	116.83	7343	21037	3	1.30	
	14	126.90	7343	22851	3	1.20	
	12	140.37	7343	25277	3	1.09	
	6.9	253.24	7343	27438	4	0.60	H_1084GH112L4

(B) - See footnotes page on inside back cover

ILH integral gearmotors

1750 RPM - 60 Hz

Input power (Hp)	Speed (RPM)	Ratio	OHL (LBF) (B)	Output torque (in-lb)	Gear stage	Service factor (SF)	Catalog number
5 (cont.)	36	48.44	7974	8723	3	2.77	H_1283GH112L4
	30	57.56	7974	10365	3	2.77	
	26	66.43	7974	11963	3	2.77	
	22	78.06	8992	14056	3	2.77	
	20	88.46	8992	15929	3	2.77	
	17	103.80	8992	18692	3	2.42	
	15	113.24	8992	20391	3	2.21	
	14	123.53	8992	22243	3	2.03	
	13	133.30	8992	24004	3	1.88	
	12	148.99	8992	26828	3	1.68	
	11	159.60	8992	28739	3	1.57	
	10	171.62	8992	30904	3	1.46	
	9	185.36	8992	33378	3	1.35	
	9	201.22	8992	36233	3	1.25	
	8	219.72	8992	39564	3	1.14	
	5.5	320.74	8992	45140	4	0.78	H_1284GH112L4
	5.3	327.50	8992	45140	4	0.77	
	4.7	375.07	8992	45140	4	0.67	
	4.6	381.71	8992	45140	4	0.66	
	4.2	418.40	8992	45140	4	0.60	
	25	69.36	11827	12489	3	2.77	H_1483GH112L4
	22	81.04	11827	14593	3	2.77	
	19	92.91	11827	16731	3	2.77	
	16	107.42	12725	19344	3	2.77	
	16	111.50	12725	20077	3	2.77	
	14	123.37	12725	22216	3	2.77	
	12	144.39	12725	26001	3	2.72	
	11	156.38	12725	28159	3	2.51	
	10	174.53	12725	31427	3	2.25	
	9	185.03	12725	33319	3	2.13	
	8	209.76	12725	37771	3	1.87	
	8	224.43	12725	40414	3	1.75	
	7	236.05	12725	42506	3	1.67	H_1483GH112L4
	7	254.70	12725	45865	3	1.54	
	6	276.23	12725	49741	3	1.42	
	6	301.34	12725	54263	3	1.30	
	5	336.11	12725	60524	3	1.17	
	5.1	343.61	11827	61874	4	1.14	H_1484GH112L4
	4.6	381.21	12725	68646	4	1.03	
	4.1	425.63	12725	70808	4	0.92	
	3.9	446.17	12725	70808	4	0.88	
	3.6	483.21	12725	70808	4	0.81	
	3.4	523.09	12725	70808	4	0.75	
	3.1	562.57	12725	70808	4	0.70	
	2.9	608.21	12725	70808	4	0.65	
	2.7	638.35	12725	70808	4	0.62	
	0.51	3450.55	12725	70808	5	0.11	H_1485GH112L4
	0.49	3539.62	12725	70808	5	0.11	
	0.44	3938.75	12725	70808	5	0.10	
	0.44	4012.71	12725	70808	5	0.10	
	0.39	4469.99	12725	70808	5	0.09	
	0.37	4701.81	12725	70808	5	0.08	
	5.3	332.11	17770	59804	4	2.07	H_1684GH112L4
	4.7	370.81	17770	66772	4	1.86	
	4.4	401.98	17770	72384	4	1.71	
	4.1	426.39	17770	76780	4	1.61	
	3.8	462.23	17770	83234	4	1.49	
	3.6	487.42	17770	87770	4	1.41	
	3.3	528.39	17770	95147	4	1.30	
	3.1	564.83	17770	101710	4	1.22	H_1684GH112L4
	2.8	615.41	17770	110818	4	1.12	
	2.5	694.17	17770	123914	4	0.99	
	2.2	782.02	17770	123914	4	0.88	
	2.0	893.72	17770	123914	4	0.77	
	1.7	1037.72	17770	123914	4	0.66	

(B) - See footnotes page on inside back cover

ILH integral gearmotors

1750 RPM - 60 Hz

Input power (Hp)	Speed (RPM)	Ratio	OHL (LBF) (B)	Output torque (in-lb)	Gear stage	Service factor (SF)	Catalog number
	471	3.71	800	1002	2	3.37	
	400	4.38	875	1183	2	2.89	
	319	5.48	875	1480	2	2.33	
	282	6.21	925	1677	2	2.08	
	247	7.07	750	1910	2	2.48	
	197	8.86	925	2393	2	2.01	H_582GH132M4
	174	10.04	1025	2712	2	1.8	
	143	12.26	1200	3312	2	1.49	
	132	13.29	1275	3590	2	1.39	
	116	15.09	1400	4076	2	1.23	
	109	16.13	1450	4357	2	1.16	
	96	18.3	1600	4943	2	1.03	
	1242	1.41	–	381	1	2.98	
	1029	1.70	–	459	1	2.81	
	858	2.04	140	551	1	2.63	
	732	2.39	111	646	1	2.46	
	614	2.85	52	770	1	2.27	
	566	3.09	52	835	1	2.19	
	507	3.45	68	932	1	2.08	H_681GH132M4
	468	3.74	73	1009	1	2.01	
	413	4.24	160	1144	1	1.78	
	384	4.56	160	1232	1	1.58	
	355	4.93	453	1333	1	1.49	
	327	5.36	453	1447	1	1.35	
	295	5.92	453	1600	1	1.05	
	501	3.49	1498	944	2	3.55	
	415	4.22	1473	1139	2	3.33	
	346	5.06	1466	1367	2	3.10	
	295	5.93	1466	1602	2	2.71	
	260	6.72	1466	1815	2	3.29	H_682GH132M4
	216	8.11	1057	2190	2	3.00	
	180	9.73	1057	2628	2	2.69	
	153	11.40	962	3080	2	2.30	
7.5	129	13.59	962	3671	2	1.93	
	119	14.74	962	3982	2	1.78	
	106	16.45	962	4444	2	1.59	
	98	17.82	1306	4814	2	1.47	
	87	20.20	1306	5456	2	1.30	H_682GH132M4
	80	21.76	1306	5877	2	1.20	
	74	23.53	1306	6355	2	1.11	
	68	25.55	1306	6901	2	1.03	
	414	4.23	783	1142	1	2.38	
	372	4.70	783	1270	1	2.26	
	343	5.11	1221	1379	1	2.18	
	310	5.65	1221	1525	1	1.86	H_881GH132M4
	289	6.06	1221	1638	1	1.51	
	268	6.53	1440	1765	1	1.50	
	247	7.07	1440	1910	1	1.34	
	228	7.69	1690	2078	1	1.04	
	359	4.87	2656	1315	2	4.02	
	295	5.94	2656	1604	2	3.82	
	252	6.96	2656	1879	2	3.62	
	231	7.59	2252	2051	2	4.03	
	189	9.26	2252	2501	2	3.82	
	161	10.85	2252	2931	2	3.62	
	137	12.75	2954	3445	2	3.41	
	120	14.63	2954	3953	2	3.21	
	101	17.27	2954	4665	2	2.97	H_882GH132M4
	93	18.72	3437	5057	2	2.86	
	84	20.81	3437	5622	2	2.64	
	77	22.61	3437	6107	2	2.43	
	70	25.01	3437	6755	2	2.20	
	65	26.85	3437	7252	2	2.05	
	60	28.93	4471	7815	2	1.90	
	56	31.32	4471	8459	2	1.76	
	51	34.07	4471	9201	2	1.62	
	47	37.27	4471	10068	2	1.48	

(B) - See footnotes page on inside back cover

ILH integral gearmotors

1750 RPM - 60 Hz

Input power (Hp)	Speed (RPM)	Ratio	OHL (LBF) (B)	Output torque (in-lb)	Gear stage	Service factor (SF)	Catalog number
7.5 (cont.)	51	34.14	4471	9221	3	1.61	H_883GH132M4
	42	41.19	4471	11125	3	1.34	
	35	49.42	4856	13349	3	1.11	
	318	5.51	3312	1488	2	4.36	H_1082GH132M4
	273	6.41	3312	1731	2	4.36	
	246	7.10	3705	1918	2	4.37	
	212	8.27	3705	2234	2	4.37	
	182	9.62	3705	2600	2	4.37	
	164	10.67	3705	2881	2	4.36	
	138	12.68	4037	3424	2	4.36	
	120	14.63	4037	3951	2	4.36	
	102	17.19	4037	4643	2	4.25	
	90	19.48	4288	5261	2	4.07	
	77	22.86	4288	6174	2	3.84	
	70	24.94	4288	6735	2	3.71	
	64	27.20	4288	7347	2	3.60	
	60	29.35	5138	7929	2	3.42	
	53	32.81	5138	8861	2	3.10	
	50	35.14	5138	9492	2	2.89	
	46	37.79	5138	10207	2	2.69	
	43	40.82	5138	11025	2	2.49	
	39	44.31	6261	11968	2	2.29	
	36	48.38	6261	13068	2	2.10	
	41	42.61	5138	11510	3	2.38	H_1083GH132M4
	34	51.97	6261	14039	3	1.95	
	29	60.90	6261	16450	3	1.67	
	24	71.59	7343	19337	3	1.42	
	21	82.14	7343	22186	3	1.24	
	18	96.94	7343	26185	3	1.05	
	313	5.59	4392	1509	2	4.28	H_1282GH132M4
	192	9.13	4886	2466	2	4.28	
	162	10.78	4886	2911	2	4.12	
	145	12.03	5306	3250	2	4.01	
	124	14.06	5306	3798	2	3.82	
	109	16.12	5306	4355	2	3.64	
	94	18.64	5578	5034	2	3.42	H_1282GH132M4
	90	19.35	5578	5225	2	3.36	
	82	21.41	5578	5782	2	3.21	
	70	25.05	5578	6767	2	2.97	
	64	27.13	5578	7329	2	2.85	
	58	30.28	6464	8179	2	2.69	
	55	32.11	6464	8672	2	2.62	
	48	36.39	6464	9831	2	2.47	
	45	38.94	6464	10519	2	2.42	
	43	40.96	6464	11063	2	2.39	
	47	37.57	6464	10147	3	4.33	H_1283GH132M4
	40	43.71	7974	11805	3	3.82	
	36	48.44	7974	13084	3	3.45	
	30	57.56	7974	15548	3	2.90	
	26	66.43	7974	17944	3	2.52	
	22	78.06	8992	21084	3	2.14	
	20	88.46	8992	23893	3	1.89	
	17	103.80	8992	28038	3	1.61	
	15	113.24	8992	30587	3	1.48	
	14	123.53	8992	33365	3	1.35	
	13	133.30	8992	36006	3	1.25	
	12	148.99	8992	40242	3	1.12	
	11	159.60	8992	43108	3	1.05	

(B) - See footnotes page on inside back cover

ILH integral gearmotors

1750 RPM - 60 Hz

Input power (Hp)	Speed (RPM)	Ratio	OHL (LBF) (B)	Output torque (in-lb)	Gear stage	Service factor (SF)	Catalog number
	231	7.57	6087	2045	2	4.35	
	129	13.52	6751	3652	2	4.35	
	113	15.51	6751	4189	2	4.23	
	102	17.09	6751	4616	2	4.13	
	87	20.21	7372	5459	2	3.92	
	76	23.04	7372	6223	2	3.74	
	66	26.49	7372	7155	2	3.53	**H_1482GH132M4**
	58	30.28	7911	8179	2	3.32	
	50	35.09	7911	9478	2	3.09	
	46	38.23	7911	10326	2	2.96	
	41	42.59	7911	11504	2	2.80	
	39	45.11	9679	12185	2	2.73	
	33	52.61	9679	14212	3	4.37	
	28	62.12	9679	16779	3	4.22	
	25	69.36	11827	18734	3	3.78	
	22	81.04	11827	21890	3	3.23	
	19	92.91	11827	25096	3	2.82	
	16	107.42	12725	29015	3	2.44	
	16	111.50	12725	30116	3	2.35	
	14	123.37	12725	33324	3	2.12	
	12	144.39	12725	39001	3	1.82	**H_1483GH132M4**
	11	156.38	12725	42238	3	1.68	
	10	174.53	12725	47141	3	1.50	
	9	185.03	12725	49979	3	1.42	
	8	209.76	12725	56657	3	1.25	
	8	224.43	12725	60621	3	1.17	
	7	236.05	12725	63759	3	1.11	
	7	254.70	12725	68797	3	1.03	
	5.1	343.61	11827	70808	4	0.76	**H_1484GH132M4**
	4.6	381.21	12725	70808	4	0.69	
7.5 (cont.)	113	15.44	17770	4170	2	4.34	
	99	17.60	17770	4754	2	4.22	
	91	19.30	17770	5213	2	4.12	
	75	23.26	17770	6283	2	3.88	**H_1682GH132M4**
	68	25.84	17770	6980	2	3.73	
	60	29.27	17770	7906	2	3.54	
	28	63.08	17770	17039	3	4.35	
	24	72.36	17770	19544	3	4.23	
	22	79.75	17770	21540	3	4.13	**H_1683GH132M4**
	19	94.30	17770	25471	3	3.92	
	16	107.48	17770	29031	3	3.74	
	14	123.59	17770	33382	3	3.53	
	12	141.28	17770	38161	3	3.25	
	11	163.72	17770	44222	3	2.80	
	10	178.38	17770	48181	3	2.57	
	9	198.71	17770	53674	3	2.31	
	8	210.49	17770	56855	3	2.18	
	7	236.72	17770	63940	3	1.94	**H_1683GH132M4**
	7	253.08	17770	68359	3	1.81	
	7	268.29	17770	72466	3	1.71	
	6	289.23	17770	78124	3	1.59	
	6	313.41	17770	84653	3	1.46	
	5	341.61	17770	92270	3	1.34	
	5.3	332.11	17770	89706	4	1.38	
	4.7	370.81	17770	100157	4	1.24	
	4.4	401.98	17770	108576	4	1.14	
	4.1	426.39	17770	115170	4	1.08	
	3.8	462.23	17770	123914	4	0.99	**H_1684GH132M4**
	3.6	487.42	17770	123914	4	0.94	
	3.3	528.39	17770	123914	4	0.87	
	3.1	564.83	17770	123914	4	0.81	
	2.8	615.41	17770	123914	4	0.75	

(B) - See footnotes page on inside back cover

ILH integral gearmotors

1750 RPM - 60 Hz

Input power (Hp)	Speed (RPM)	Ratio	OHL (LBF) (B)	Output torque (in-lb)	Gear stage	Service factor (SF)	Catalog number
	471	3.71	800	1336	2	2.53	
	400	4.38	875	1577	2	2.17	
	319	5.48	875	1974	2	1.75	
	282	6.21	925	2236	2	1.56	
	247	7.07	750	2546	2	1.86	H_582GH132N4
	197	8.86	925	3191	2	1.51	
	174	10.04	1025	3616	2	1.35	
	143	12.26	1200	4415	2	1.12	
	132	13.29	1275	4786	2	1.04	
	1242	1.41	–	507	1	2.24	
	1029	1.70	–	612	1	2.11	
	858	2.04	140	735	1	1.97	
	732	2.39	111	861	1	1.85	
	614	2.85	52	1026	1	1.70	
	566	3.09	52	1113	1	1.64	H_681GH132N4
	507	3.45	68	1242	1	1.56	
	468	3.74	73	1346	1	1.51	
	413	4.24	160	1525	1	1.33	
	384	4.56	160	1643	1	1.19	
	355	4.93	453	1777	1	1.12	
	327	5.36	453	1929	1	1.01	
	501	3.49	1498	1259	2	2.66	H_682GH132N4
	415	4.22	1473	1518	2	2.50	
	346	5.06	1466	1822	2	2.33	
	295	5.93	1466	2136	2	2.03	
	260	6.72	1466	2420	2	2.47	
	216	8.11	1057	2920	2	2.25	
	180	9.73	1057	3504	2	2.02	H_682GH132N4
	153	11.40	962	4107	2	1.72	
	129	13.59	962	4895	2	1.45	
	119	14.74	962	5309	2	1.33	
10	106	16.45	962	5926	2	1.20	
	98	17.82	1306	6418	2	1.10	
	714	2.45	460	882	1	2.26	
	608	2.88	487	1037	1	2.12	
	530	3.30	617	1190	1	2.00	
	449	3.90	690	1405	1	1.85	
	414	4.23	783	1522	1	1.78	
	372	4.70	783	1693	1	1.70	H_881GH132N4
	343	5.11	1221	1839	1	1.63	
	310	5.65	1221	2034	1	1.39	
	289	6.06	1221	2183	1	1.14	
	268	6.53	1440	2353	1	1.13	
	247	7.07	1440	2547	1	1.01	
	359	4.87	2656	1753	2	3.02	
	295	5.94	2656	2139	2	2.86	
	252	6.96	2656	2506	2	2.71	
	231	7.59	2252	2734	2	3.02	
	189	9.26	2252	3335	2	2.86	
	161	10.85	2252	3908	2	2.72	
	137	12.75	2954	4593	2	2.56	
	120	14.63	2954	5270	2	2.41	
	101	17.27	2954	6220	2	2.23	H_882GH132N4
	93	18.72	3437	6742	2	2.15	
	84	20.81	3437	7496	2	1.98	
	77	22.61	3437	8142	2	1.83	
	70	25.01	3437	9007	2	1.65	
	65	26.85	3437	9669	2	1.54	
	60	28.93	4471	10420	2	1.43	
	56	31.32	4471	11278	2	1.32	
	51	34.07	4471	12269	2	1.21	
	47	37.27	4471	13424	2	1.11	
	51	34.14	4471	12295	3	1.21	H_883GH132N4
	42	41.19	4471	14833	3	1.00	

(B) - See footnotes page on inside back cover

ILH integral gearmotors

1750 RPM - 60 Hz

Input power (Hp)	Speed (RPM)	Ratio	OHL (LBF) (B)	Output torque (in-lb)	Gear stage	Service factor (SF)	Catalog number
10 (cont.)	318	5.51	3312	1983	2	3.27	H_1082GH132N4
	273	6.41	3312	2308	2	3.27	
	246	7.10	3705	2558	2	3.27	
	212	8.27	3705	2979	2	3.28	
	182	9.62	3705	3466	2	3.27	
	164	10.67	3705	3842	2	3.27	
	138	12.68	4037	4565	2	3.27	
	120	14.63	4037	5268	2	3.27	
	102	17.19	4037	6190	2	3.19	
	90	19.48	4288	7015	2	3.05	
	77	22.86	4288	8232	2	2.88	
	70	24.94	4288	8980	2	2.78	
	64	27.20	4288	9796	2	2.70	
	60	29.35	5138	10571	2	2.56	
	53	32.81	5138	11815	2	2.32	
	50	35.14	5138	12656	2	2.17	
	46	37.79	5138	13610	2	2.02	
	43	40.82	5138	14700	2	1.87	
	39	44.31	6261	15957	2	1.72	
	36	48.38	6261	17424	2	1.57	
	41	42.61	5138	15346	3	1.79	H_1083GH132N4
	34	51.97	6261	18718	3	1.47	
	29	60.90	6261	21933	3	1.25	
	24	71.59	7343	25782	3	1.06	
	313	5.59	4392	2012	2	3.21	H_1282GH132N4
	192	9.13	4886	3288	2	3.21	
	162	10.78	4886	3882	2	3.09	
	145	12.03	5306	4334	2	3.01	
	124	14.06	5306	5064	2	2.87	
	109	16.12	5306	5806	2	2.73	
	94	18.64	5578	6713	2	2.57	
	90	19.35	5578	6967	2	2.52	
	82	21.41	5578	7710	2	2.41	
	70	25.05	5578	9023	2	2.23	
	64	27.13	5578	9772	2	2.14	
	58	30.28	6464	10906	2	2.02	
	55	32.11	6464	11562	2	1.97	
	48	36.39	6464	13107	2	1.85	
	45	38.94	6464	14025	2	1.81	
	43	40.96	6464	14750	2	1.79	
	47	37.57	6464	13529	3	3.25	H_1283GH132N4
	40	43.71	7974	15741	3	2.87	
	36	48.44	7974	17446	3	2.59	
	30	57.56	7974	20731	3	2.18	
	26	66.43	7974	23926	3	1.89	
	22	78.06	8992	28113	3	1.61	
	20	88.46	8992	31857	3	1.42	
	17	103.80	8992	37384	3	1.21	
15	15	113.24	8992	40782	3	1.11	H_1283GH132N4
	14	123.53	8992	44487	3	1.01	
	231	7.57	6087	2726	2	3.26	H_1482GH132N4
	129	13.52	6751	4869	2	3.26	
	113	15.51	6751	5586	2	3.17	
	102	17.09	6751	6155	2	3.10	
	87	20.21	7372	7278	2	2.94	
	76	23.04	7372	8298	2	2.81	
	66	26.49	7372	9540	2	2.65	
	58	30.28	7911	10905	2	2.49	
	50	35.09	7911	12637	2	2.32	
	46	38.23	7911	13768	2	2.22	
	41	42.59	7911	15338	2	2.10	
	39	45.11	9679	16246	2	2.05	

(B) - See footnotes page on inside back cover

ILH integral gearmotors

1750 RPM - 60 Hz

Input power (Hp)	Speed (RPM)	Ratio	OHL (LBF) (B)	Output torque (in-lb)	Gear stage	Service factor (SF)	Catalog number
15 (cont.)	33	52.61	9679	18949	3	3.27	H_1483GH132N4
	28	62.12	9679	22371	3	3.17	
	25	69.36	11827	24978	3	2.83	
	22	81.04	11827	29187	3	2.43	
	19	92.91	11827	33462	3	2.12	
	16	107.42	12725	38687	3	1.83	
	16	111.50	12725	40154	3	1.76	
	14	123.37	12725	44432	3	1.59	
	12	144.39	12725	52002	3	1.36	
	11	156.38	12725	56318	3	1.26	
	10	174.53	12725	62854	3	1.13	
	9	185.03	12725	66638	3	1.06	
	113	15.44	17770	5561	2	3.26	H_1682GH132N4
	99	17.60	17770	6339	2	3.17	
	91	19.30	17770	6951	2	3.09	
	75	23.26	17770	8377	2	2.91	
	68	25.84	17770	9306	2	2.80	
	60	29.27	17770	10541	2	2.65	
	28	63.08	17770	22719	3	3.26	H_1683GH132N4
	24	72.36	17770	26058	3	3.17	
	22	79.75	17770	28721	3	3.10	
	19	94.30	17770	33962	3	2.94	
	16	107.48	17770	38708	3	2.81	
	14	123.59	17770	44510	3	2.65	
	12	141.28	17770	50881	3	2.44	
	11	163.72	17770	58963	3	2.10	
	10	178.38	17770	64241	3	1.93	
	9	198.71	17770	71566	3	1.73	
	8	210.49	17770	75806	3	1.63	
	7	236.72	17770	85254	3	1.45	
	7	253.08	17770	91145	3	1.36	
	7	268.29	17770	96621	3	1.28	
	6	289.23	17770	104166	3	1.19	
	6	313.41	17770	112871	3	1.10	
	5	341.61	17770	123027	3	1.01	
	5.3	332.11	17770	119608	4	1.04	H_1684GH132N4
	4.7	370.81	17770	123914	4	0.93	
	4.4	401.98	17770	123914	4	0.86	
	4.1	426.39	17770	123914	4	0.81	
	359	4.87	2656	2630	2	3.03	H_882GH160P4
	295	5.94	2656	3208	2	3.03	
	251	6.96	2656	3759	2	2.97	
	231	7.59	2252	4101	2	2.88	
	189	9.26	2252	5002	2	2.49	
	161	10.85	2252	5861	2	2.23	
	137	12.75	2954	6890	2	2.01	
	120	14.63	2954	7905	2	1.84	
	101	17.27	2954	9330	2	1.59	
	93	18.72	3437	10113	2	1.47	
	84	20.81	3437	11244	2	1.32	
	77	22.61	3437	12214	2	1.22	H_882GH160P4
	70	25.01	3437	13510	2	1.10	
	65	26.85	3437	14504	2	1.03	

(B) - See footnotes page on inside back cover

ILH integral gearmotors

1750 RPM - 60 Hz

Input power (Hp)	Speed (RPM)	Ratio	OHL (LBF) (B)	Output torque (in-lb)	Gear stage	Service factor (SF)	Catalog number
15 (cont.)	318	5.51	3312	2975	2	3.03	H_1082GH160P4
	273	6.41	3312	3461	2	3.03	
	246	7.10	3705	3836	2	3.03	
	212	8.27	3705	4469	2	3.03	
	182	9.62	3705	5199	2	3.03	
	164	10.67	3705	5762	2	3.03	
	138	12.68	4037	6847	2	3.03	
	120	14.63	4037	7903	2	2.90	
	102	17.19	4037	9286	2	2.69	
	90	19.48	4288	10522	2	2.54	
	77	22.86	4288	12348	2	2.22	
	70	24.94	4288	13470	2	2.04	
	64	27.20	4288	14694	2	1.86	
	60	29.35	5138	15857	2	1.73	
	53	32.81	5138	17723	2	1.55	
	50	35.14	5138	18985	2	1.45	
	41	42.61	5138	23020	3	1.19	H_1083GH160P4
	482	3.63	4055	1959	2	3.03	H_1282GH160P4
	362	4.83	4392	2607	2	3.03	
	313	5.59	4392	3018	2	3.03	
	295	5.93	4392	3201	2	3.03	
	222	7.88	4886	4259	2	3.03	
	192	9.13	4886	4932	2	3.03	
	162	10.78	4886	5823	2	3.03	
	145	12.03	5306	6501	2	3.03	
	124	14.06	5306	7596	2	3.03	
	109	16.12	5306	8709	2	3.03	
	94	18.64	5578	10069	2	3.03	
	90	19.35	5578	10451	2	3.03	
	82	21.41	5578	11564	2	2.89	
	70	25.05	5578	13534	2	2.56	
	65	27.13	5578	14658	2	2.41	
	58	30.28	6464	16359	2	2.21	
	55	32.11	6464	17344	2	2.10	
	48	36.39	6464	19661	2	1.89	
	45	38.94	6464	21037	2	1.79	
	47	37.57	6464	20294	3	2.16	H_1283GH160P4
	40	43.71	7974	23611	3	1.91	
	36	48.44	7974	26169	3	1.73	
	30	57.56	7974	31096	3	1.45	
	26	66.43	7974	35888	3	1.26	
	22	78.06	8992	42169	3	1.07	
	356	4.92	5381	2658	2	3.03	H_1482GH160P4
	272	6.43	5381	3473	2	3.03	
	231	7.57	6087	4090	2	3.03	
	199	8.79	6087	4746	2	3.03	
	152	11.48	6751	6201	2	3.03	
	129	13.52	6751	7304	2	3.03	
	113	15.51	6751	8377	2	3.03	
	102	17.09	6751	9233	2	3.03	
	87	20.21	7372	10918	2	3.03	
	76	23.04	7372	12444	2	3.03	
	66	26.49	7372	14309	2	3.03	
	58	30.28	7911	16357	2	3.00	
	50	35.09	7911	18956	2	2.70	
	46	38.23	7911	20653	2	2.52	
	41	42.59	7911	23007	2	2.31	
	39	45.11	9679	24371	2	2.20	
	51	34.15	7911	18449	3	3.03	H_1483GH160P4
	39	45.44	9679	24547	3	2.88	
	33	52.61	9679	28423	3	2.49	
	28	62.12	9679	33557	3	2.11	
	25	69.36	11827	37467	3	1.89	
	22	81.04	11827	43780	3	1.62	
	19	92.91	11827	50193	3	1.41	

(B) - See footnotes page on inside back cover

ILH integral gearmotors

1750 RPM - 60 Hz

Input power (Hp)	Speed (RPM)	Ratio	OHL (LBF) (B)	Output torque (in-lb)	Gear stage	Service factor (SF)	Catalog number
15 (cont.)	16	107.42	12725	58031	3	1.22	H_1483GH160P4
	16	111.50	12725	60231	3	1.18	
	14	123.37	12725	66649	3	1.06	
	282	6.20	17770	3349	2	3.03	H_1682GH160P4
	169	10.34	17770	5586	2	3.03	
	132	13.27	17770	7169	2	3.03	
	113	15.44	17770	8341	2	3.03	
	99	17.60	17770	9508	2	3.03	
	91	19.30	17770	10426	2	3.03	
	75	23.26	17770	12565	2	3.03	
	68	25.84	17770	13959	2	3.03	
	60	29.27	17770	15812	2	3.03	
	43	40.99	17770	22145	3	3.03	H_1683GH160P4
	33	53.56	17770	28935	3	3.03	
	28	63.08	17770	34079	3	3.03	
	24	72.36	17770	39088	3	3.03	
	22	79.75	17770	43081	3	2.88	
	19	94.30	17770	50943	3	2.43	
	16	107.48	17770	58063	3	2.13	
	14	123.59	17770	66765	3	1.86	
	12	141.28	17770	76321	3	1.62	
	11	163.72	17770	88444	3	1.40	
	10	178.38	17770	96362	3	1.29	
	9	198.71	17770	107349	3	1.15	
	8	210.49	17770	113709	3	1.09	
20	359	4.87	2656	3507	2	2.27	H_882GH160Q4
	295	5.94	2656	4277	2	2.27	
	251	6.96	2656	5012	2	2.22	
	231	7.59	2252	5468	2	2.16	
	189	9.26	2252	6670	2	1.87	
	161	10.85	2252	7815	2	1.68	
	137	12.75	2954	9187	2	1.51	
	120	14.63	2954	10540	2	1.38	
	101	17.27	2954	12440	2	1.20	
	93	18.72	3437	13484	2	1.10	
	318	5.51	3312	3967	2	2.27	H_1082GH160Q4
	273	6.41	3312	4615	2	2.27	
	246	7.10	3705	5115	2	2.27	
	212	8.27	3705	5958	2	2.27	
	182	9.62	3705	6932	2	2.27	
	164	10.67	3705	7683	2	2.27	
	138	12.68	4037	9130	2	2.27	
	120	14.63	4037	10537	2	2.18	
	102	17.19	4037	12381	2	2.02	
	90	19.48	4288	14030	2	1.90	
	77	22.86	4288	16464	2	1.67	
	70	24.94	4288	17960	2	1.53	
	64	27.20	4288	19592	2	1.40	
	60	29.35	5138	21143	2	1.30	
	53	32.81	5138	23630	2	1.16	
	50	35.14	5138	25313	2	1.08	
	483	3.63	4055	2612	2	2.27	H_1282GH160Q4
	363	4.83	4392	3476	2	2.27	
	313	5.59	4392	4024	2	2.27	
	295	5.93	4392	4268	2	2.27	
	222	7.88	4886	5679	2	2.27	
	192	9.13	4886	6576	2	2.27	
	162	10.78	4886	7763	2	2.27	
	145	12.03	5306	8668	2	2.27	
	124	14.06	5306	10128	2	2.27	
	109	16.12	5306	11612	2	2.27	
	94	18.64	5578	13425	2	2.27	
	90	19.35	5578	13934	2	2.27	
	82	21.41	5578	15419	2	2.17	
	70	25.05	5578	18046	2	1.92	
	64	27.13	5578	19544	2	1.81	

(B) - See footnotes page on inside back cover

ILH integral gearmotors

1750 RPM - 60 Hz

Input power (Hp)	Speed (RPM)	Ratio	OHL (LBF) (B)	Output torque (in-lb)	Gear stage	Service factor (SF)	Catalog number
20 (cont.)	58	30.28	6464	21812	2	1.65	H_1282GH160Q4
	55	32.11	6464	23125	2	1.58	
	48	36.39	6464	26215	2	1.42	
	45	38.94	6464	28049	2	1.34	
	47	37.57	6464	27059	3	1.62	H_1283GH160Q4
	40	43.71	7974	31481	3	1.43	
	36	48.44	7974	34891	3	1.29	
	30	57.56	7974	41462	3	1.09	
	356	4.92	5381	3544	2	2.27	H_1482GH160Q4
	272	6.43	5381	4630	2	2.27	
	231	7.57	6087	5454	2	2.27	
	202	8.68	6087	6255	2	2.27	
	199	8.79	6087	6328	2	2.27	
	152	11.48	6751	8269	2	2.27	
	129	13.52	6751	9739	2	2.27	
	113	15.51	6751	11170	2	2.27	
	102	17.09	6751	12311	2	2.27	
	87	20.21	7372	14558	2	2.27	
	76	23.04	7372	16592	2	2.27	
	66	26.49	7372	19079	2	2.27	
	58	30.28	7911	21810	2	2.25	
	50	35.09	7911	25274	2	2.02	
	46	38.23	7911	27537	2	1.89	
	41	42.59	7911	30676	2	1.73	
	39	45.11	9679	32494	2	1.65	
	51	34.15	7911	24599	3	2.27	H_1483GH160Q4
	39	45.44	9679	32730	3	2.16	
	33	52.61	9679	37898	3	1.87	
	28	62.12	9679	44743	3	1.58	
	25	69.36	11827	49956	3	1.42	
	22	81.04	11827	58373	3	1.21	
	19	92.91	11827	66924	3	1.06	
	282	6.20	17770	4466	2	2.27	H_1682GH160Q4
	169	10.34	17770	7448	2	2.27	
	132	13.27	17770	9558	2	2.27	
	113	15.44	17770	11121	2	2.27	
	99	17.60	17770	12677	2	2.27	
	91	19.30	17770	13902	2	2.27	
	75	23.26	17770	16754	2	2.27	
	68	25.84	17770	18612	2	2.27	
	60	29.27	17770	21083	2	2.27	
	43	40.99	17770	29526	3	2.27	H_1683GH160Q4
	33	53.56	17770	38580	3	2.27	
	28	63.08	17770	45439	3	2.27	
	24	72.36	17770	52117	3	2.27	
	22	79.75	17770	57441	3	2.16	
	19	94.30	17770	67924	3	1.82	
	16	107.48	17770	77417	3	1.60	
	14	123.59	17770	89019	3	1.39	
	12	141.28	17770	101761	3	1.22	
	11	163.72	17770	117926	3	1.05	
25	318	5.51	3312	4958	2	3.02	H_1082GH180R4
	273	6.41	3312	5769	2	2.70	
	246	7.10	3705	6394	2	2.49	
	212	8.27	3705	7448	2	3.68	
	182	9.62	3705	8665	2	3.17	
	164	10.67	3705	9604	2	2.86	
	138	12.68	4037	11412	2	2.40	
	120	14.63	4037	13171	2	2.08	
	102	17.19	4037	15476	2	1.77	
	90	19.48	4288	17537	2	1.56	
	77	22.86	4288	20580	2	1.33	
	70	24.94	4288	22450	2	1.22	
	64	27.20	4288	24490	2	1.12	
	60	29.35	5138	26429	2	1.04	H_1082GH180R4

(B) - See footnotes page on inside back cover

ILH integral gearmotors

1750 RPM - 60 Hz

Input power (Hp)	Speed (RPM)	Ratio	OHL (LBF) (B)	Output torque (in-lb)	Gear stage	Service factor (SF)	Catalog number
	483	3.63	4055	3265	2	3.70	
	363	4.83	4392	4345	2	3.70	
	313	5.59	4392	5031	2	3.70	
	295	5.93	4392	5335	2	3.70	
	222	7.88	4886	7099	2	3.71	
	192	9.13	4886	8220	2	3.70	
	162	10.78	4886	9704	2	3.70	
	145	12.03	5306	10835	2	3.71	
	124	14.06	5306	12661	2	3.40	**H_1282GH180R4**
	109	16.12	5306	14515	2	3.04	
	94	18.64	5578	16782	2	2.69	
	90	19.35	5578	17418	2	2.59	
	82	21.41	5578	19274	2	2.34	
	70	25.05	5578	22557	2	2.00	
	64	27.13	5578	24429	2	1.85	
	58	30.28	6464	27265	2	1.66	
	55	32.11	6464	28906	2	1.56	
	47	37.57	6464	33823	3	1.30	
	40	43.71	7974	39351	3	1.15	**H_1283GH180R4**
	36	48.44	7974	43614	3	1.04	
	356	4.92	5381	4430	2	3.70	
	272	6.43	5381	5788	2	3.70	
	231	7.57	6087	6817	2	3.70	
	202	8.68	6087	7819	2	3.71	
	199	8.79	6087	7910	2	3.70	
	152	11.48	6751	10336	2	3.70	
	129	13.52	6751	12173	2	3.70	
	113	15.51	6751	13962	2	3.70	
	102	17.09	6751	15389	2	3.70	**H_1482GH180R4**
	87	20.21	7372	18197	2	3.70	
25 (cont.)	76	23.04	7372	20740	2	3.38	
	66	26.49	7372	23849	2	2.97	
	58	30.28	7911	27262	2	2.60	
	50	35.09	7911	31593	2	2.24	
	46	38.23	7911	34421	2	2.06	
	41	42.59	7911	38346	2	1.85	
	39	45.11	9679	40618	2	1.74	
	51	34.15	7911	30749	3	2.30	
	39	45.44	9679	40912	3	1.73	
	33	52.61	9679	47372	3	1.49	**H_1483GH180R4**
	28	62.12	9679	55929	3	1.27	
	25	69.36	11827	62445	3	1.13	
	355	4.93	17770	4436	2	3.70	
	282	6.20	17770	5584	2	3.71	
	213	8.21	17770	7393	2	3.70	
	169	10.34	17770	9306	2	3.70	
	132	13.27	17770	11948	2	3.70	
	113	15.44	17770	13903	2	3.70	
	99	17.60	17770	15846	2	3.70	
	91	19.30	17770	17378	2	3.70	**H_1682GH180R4**
	75	23.26	17770	20943	2	3.59	
	68	25.84	17770	23265	2	3.32	
	60	29.27	17770	26357	2	3.01	
	52	33.88	17770	30507	2	2.69	
	44	39.45	17770	35517	2	2.37	
	42	42.09	17770	37898	2	2.25	
	38	46.61	17770	41969	2	2.06	
	43	40.99	17770	36908	3	3.36	
	33	53.56	17770	48225	3	2.57	**H_1683GH180R4**
	28	63.08	17770	56798	3	2.18	

(B) - See footnotes page on inside back cover

ILH integral gearmotors

1750 RPM - 60 Hz

Input power (Hp)	Speed (RPM)	Ratio	OHL (LBF) (B)	Output torque (in-lb)	Gear stage	Service factor (SF)	Catalog number
25 (cont.)	24	72.36	17770	65146	3	1.90	H_1683GH180R4
	22	79.75	17770	71801	3	1.73	
	19	94.30	17770	84905	3	1.46	
	16	107.48	17770	96771	3	1.28	
	14	123.59	17770	111274	3	1.11	
	12	141.28	17770	127202	3	0.97	
30	318	5.51	3312	5950	2	2.52	H_1082GH180S4
	273	6.41	3312	6923	2	2.25	
	246	7.10	3705	7673	2	2.08	
	212	8.27	3705	8937	2	3.07	
	182	9.62	3705	10398	2	2.64	
	164	10.67	3705	11525	2	2.38	
	138	12.68	4037	13695	2	2.00	
	120	14.63	4037	15805	2	1.74	
	102	17.19	4037	18571	2	1.48	
	90	19.48	4288	21045	2	1.30	
	77	22.86	4288	24696	2	1.11	
	70	24.94	4288	26941	2	1.02	
	483	3.63	4055	3918	2	3.08	H_1282GH180S4
	363	4.83	4392	5213	2	3.08	
	313	5.59	4392	6037	2	3.08	
	295	5.93	4392	6402	2	3.08	
	222	7.88	4886	8518	2	3.09	
	192	9.13	4886	9864	2	3.09	
	162	10.78	4886	11645	2	3.09	
	145	12.03	5306	13002	2	3.09	
	124	14.06	5306	15193	2	2.84	
	109	16.12	5306	17418	2	2.54	
	94	18.64	5578	20138	2	2.24	
	90	19.35	5578	20902	2	2.16	
	82	21.41	5578	23129	2	1.95	
	70	25.05	5578	27069	2	1.67	
	64	27.13	5578	29315	2	1.54	
	58	30.28	6464	32718	2	1.38	
	55	32.11	6464	34687	2	1.30	
	47	37.57	6464	40588	3	1.08	H_1283GH180S4
	356	4.92	5381	5316	2	3.09	H_1482GH180S4
	272	6.43	5381	6946	2	3.09	
	231	7.57	6087	8180	2	3.09	
	202	8.68	6087	9383	2	3.09	
	199	8.79	6087	9492	2	3.09	
	152	11.48	6751	12403	2	3.09	
	129	13.52	6751	14608	2	3.09	
	113	15.51	6751	16755	2	3.09	
	102	17.09	6751	18467	2	3.09	
	87	20.21	7372	21837	2	3.09	
	76	23.04	7372	24888	2	2.82	
	66	26.49	7372	28618	2	2.47	
	58	30.28	7911	32715	2	2.16	
	50	35.09	7911	37911	2	1.87	
	46	38.23	7911	41305	2	1.71	
	41	42.59	7911	46015	2	1.54	
	39	45.11	9679	48741	2	1.45	
	51	34.15	7911	36899	3	1.92	H_1483GH180S4
	39	45.44	9679	49095	3	1.44	
	33	52.61	9679	56847	3	1.25	
	28	62.12	9679	67114	3	1.06	
	355	4.93	17770	5323	2	3.08	H_1682GH180S4
	282	6.20	17770	6700	2	3.09	
	213	8.21	17770	8872	2	3.09	
	169	10.34	17770	11167	2	3.09	

(B) - See footnotes page on inside back cover

ILH integral gearmotors

1750 RPM - 60 Hz

Input power (Hp)	Speed (RPM)	Ratio	OHL (LBF) (B)	Output torque (in-lb)	Gear stage	Service factor (SF)	Catalog number
30 (cont.)	132	13.27	17770	14337	2	3.09	H_1682GH180S4
	113	15.44	17770	16683	2	3.09	
	99	17.60	17770	19016	2	3.09	
	91	19.30	17770	20854	2	3.09	
	75	23.26	17770	25131	2	2.99	
	68	25.84	17770	27918	2	2.76	
	60	29.27	17770	31629	2	2.51	
	52	33.88	17770	36609	2	2.24	
	44	39.45	17770	42620	2	1.98	
	42	42.09	17770	45478	2	1.87	
	38	46.61	17770	50362	2	1.72	
	43	40.99	17770	44290	3	2.80	H_1683GH180S4
	33	53.56	17770	57870	3	2.14	
	28	63.08	17770	68158	3	1.82	
	24	72.36	17770	78175	3	1.58	
	22	79.75	17770	86162	3	1.44	
	19	94.30	17770	101886	3	1.22	
	16	107.48	17770	116125	3	1.07	
40	483	3.63	4055	5224	2	3.40	H_1282GH200T4
	363	4.83	4392	6951	2	3.16	
	313	5.59	4392	8049	2	2.87	
	295	5.93	4392	8536	2	3.40	
	222	7.88	4886	11358	2	3.16	
	192	9.13	4886	13151	2	2.92	
	162	10.78	4886	15527	2	2.62	
	145	12.03	5306	17336	2	2.41	
	124	14.06	5306	20257	2	2.13	
	109	16.12	5306	23224	2	1.90	
	94	18.64	5578	26851	2	1.68	
	90	19.35	5578	27869	2	1.62	
	82	21.41	5578	30838	2	1.46	
	70	25.05	5578	36091	2	1.25	
	64	27.13	5578	39087	2	1.15	
	356	4.92	5381	7088	2	3.44	H_1482GH200T4
	272	6.43	5381	9261	2	3.19	
	231	7.57	6087	10907	2	2.90	
	202	8.68	6087	12510	2	2.67	
	199	8.79	6087	12656	2	3.44	H_1482GH200T4
	152	11.48	6751	16537	2	3.19	
	129	13.52	6751	19477	2	2.90	
	113	15.51	6751	22340	2	2.66	
	102	17.09	6751	24622	2	2.50	
	87	20.21	7372	29115	2	2.23	
	76	23.04	7372	33185	2	2.03	
	66	26.49	7372	38158	2	1.83	
	58	30.28	7911	43620	2	1.62	
	50	35.09	7911	50549	2	1.40	
	46	38.23	7911	55074	2	1.29	
	51	34.15	7911	49198	3	1.44	H_1483GH200T4
	39	45.44	9679	65460	3	1.08	
	355	4.93	17770	7098	2	3.42	H_1682GH200T4
	282	6.20	17770	8934	2	3.36	
	213	8.21	17770	11829	2	3.42	
	169	10.34	17770	14890	2	3.36	
	132	13.27	17770	19116	2	3.13	
	113	15.44	17770	22244	2	2.85	
	99	17.60	17770	25354	2	2.62	
	91	19.30	17770	27805	2	2.46	
	75	23.26	17770	33509	2	2.15	
	68	25.84	17770	37224	2	1.99	
	60	29.27	17770	42171	2	1.81	
	52	33.88	17770	48811	2	1.61	
	44	39.45	17770	56827	2	1.42	

(B) - See footnotes page on inside back cover

ILH integral gearmotors

1750 RPM - 60 Hz

Input power (Hp)	Speed (RPM)	Ratio	OHL (LBF) (B)	Output torque (in-lb)	Gear stage	Service factor (SF)	Catalog number
40 (cont.)	42	42.09	17770	60637	2	1.35	**H_1682GH200T4**
	43	40.99	17770	59053	3	2.10	**H_1683GH200T4**
	33	53.56	17770	77160	3	1.61	
	28	63.08	17770	90877	3	1.36	
	24	72.36	17770	104233	3	1.19	
	22	79.75	17770	114882	3	1.08	

(B) - See footnotes page on inside back cover

ILH Dimensions Outline

C-face

Foot mount

Single reduction

ILH-155	Output shaft dimensions
ILH-156	Gearcase dimensions
ILH-157	Clamp collar (NEMA/IEC)
ILH-158	3 pc coupled (NEMA/IEC)

Double and triple reduction

ILH-159	Output shaft dimensions
ILH-160	Gearcase dimensions
ILH-161	Clamp collar (NEMA/IEC)
ILH-162	3 pc coupled (NEMA/IEC)

4 & 5 Stage

ILH-163	Output shaft dimensions
ILH-164	Gearcase dimensions
ILH-165	Clamp collar (NEMA/IEC)
ILH-166	3 pc coupled (NEMA/IEC)

Flange mount

Single reduction

ILH-167	Output shaft dimensions
ILH-168	Gearcase dimensions
ILH-169	Clamp collar (NEMA/IEC)
ILH-170	3 pc coupled (NEMA/IEC)

Double and triple reduction

ILH-171	Output shaft dimensions
ILH-172	Gearcase dimensions
ILH-173	Clamp collar (NEMA/IEC)
ILH-174	3 pc coupled (NEMA/IEC)

4 & 5 Stage

ILH-175	Output shaft dimensions
ILH-176	Gearcase dimensions
ILH-177	Clamp collar (NEMA/IEC)
ILH-178	3 pc coupled (NEMA/IEC)

ILH reducer dimensions
(cont.)

Separate

Foot mount

Single reduction

ILH-179	Output shaft dimensions
ILH-180	Gearcase dimensions
ILH-181	Input shaft dimensions
ILH-182	3 pc coupled (NEMA/IEC)

Double and triple reduction

ILH-183	Output shaft dimensions
ILH-184	Gearcase dimensions
ILH-185	Input shaft dimensions

4 & 5 Stage

ILH-187	Output shaft dimensions
ILH-188	Gearcase dimensions
ILH-189	Input shaft dimensions

Flange mount

Single reduction

ILH-191	Output shaft dimensions
ILH-192	Gearcase dimensions
ILH-193	Input shaft dimensions

Double and triple reduction

ILH-195	Output shaft dimensions
ILH-196	Gearcase dimensions
ILH-197	Input shaft dimensions

4 & 5 Stage

ILH-199	Output shaft dimensions
ILH-200	Gearcase dimensions
ILH-201	Input shaft dimensions

ILH reducer dimensions
(cont.)

Integral

Foot mount

Single reduction

ILH-203	Output shaft dimensions
ILH-204	Gearcase dimensions
ILH-205	Standard motor dimensions
ILH-206	Washdown motor dimensions

Double and triple reduction

ILH-207	Output shaft dimensions
ILH-208	Gearcase dimensions
ILH-209	Standard motor dimensions
ILH-210	Washdown motor dimensions

4 & 5 Stage

ILH-211	Output shaft dimensions
ILH-212	Gearcase dimensions
ILH-213	Standard motor dimensions
ILH-214	Washdown motor dimensions

Flange mount

Single reduction

ILH-214	Output shaft dimensions
ILH-216	Gearcase dimensions
ILH-218	Standard motor dimensions
ILH-218	Washdown motor dimensions

Double and triple reduction

ILH-219	Output shaft dimensions
ILH-220	Gearcase dimensions
ILH-221	Standard motor dimensions
ILH-222	Washdown motor dimensions

4 & 5 Stage

ILH-223	Output shaft dimensions
ILH-224	Gearcase dimensions
ILH-225	Standard motor dimensions
ILH-226	Washdown motor dimensions

Dimensions

Output shaft dimensions

C-face – foot mounted

Single reduction

HB_1C_

HB_1L_

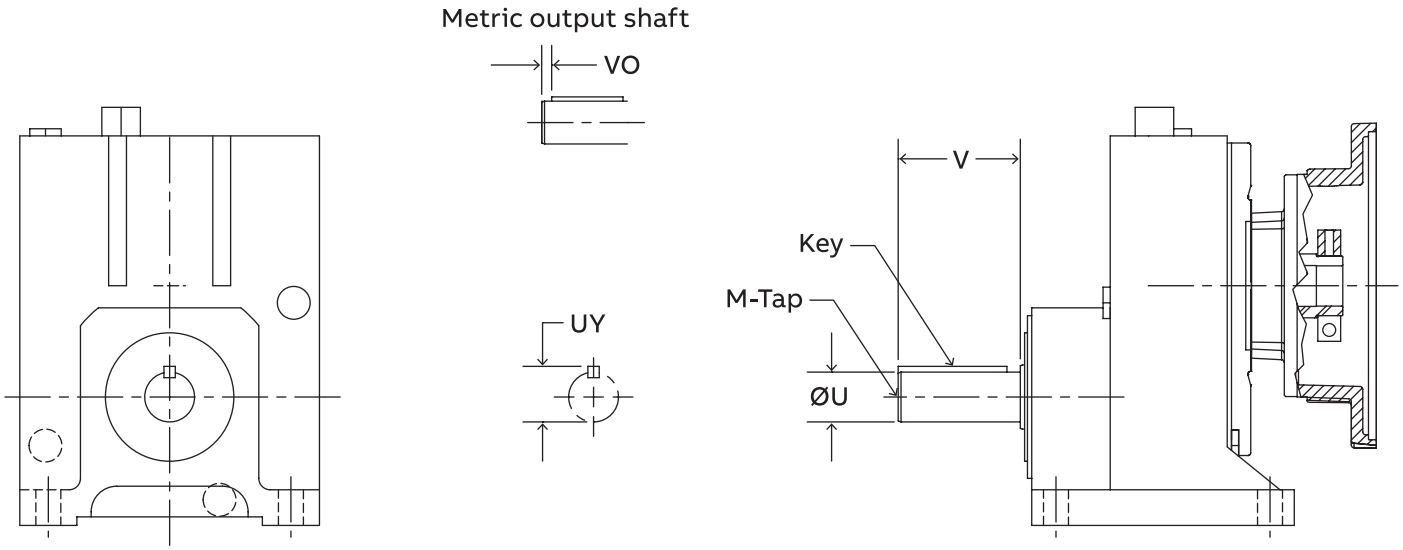

	Standard inch output shaft						Standard metric output shaft						
	Ø U	Tol.	UY	V	Key	M-Tap	Ø U	Tol.	UY	V	Vo	Key	M-Tap
38	0.875	+0.000 -0.001	0.95	2.24	3/16 x 3/16 x 1.50	5/16-18 UNC	20	+0.015 +0.002	22.5	40	5	6 x 6 x 30	M6 x 16
48	1.125	+0.000 -0.001	1.23	2.74	1/4 x 1/4 x 2.35	3/8-16 UNC	25	+0.015 +0.002	28	50	7	8 x 7 x 40	M10 x 22
68	1.375	+0.000 -0.001	1.51	3.37	5/16 x 5/16 x 3.00	3/8-16 UNC	30	+0.015 +0.002	33	60	7	8 x 7 x 50	M10 x 36
88	1.625	+0.000 -0.001	1.79	3.15	3/8 x 3/8 x 2.75	5/8-11 UNC	40	+0.018 +0.002	43	80	5	12 X 8 X 70	M16 X 36

Gearcase dimensions

C-face – foot mounted

Single reduction

HB_1C_
HB_1L_

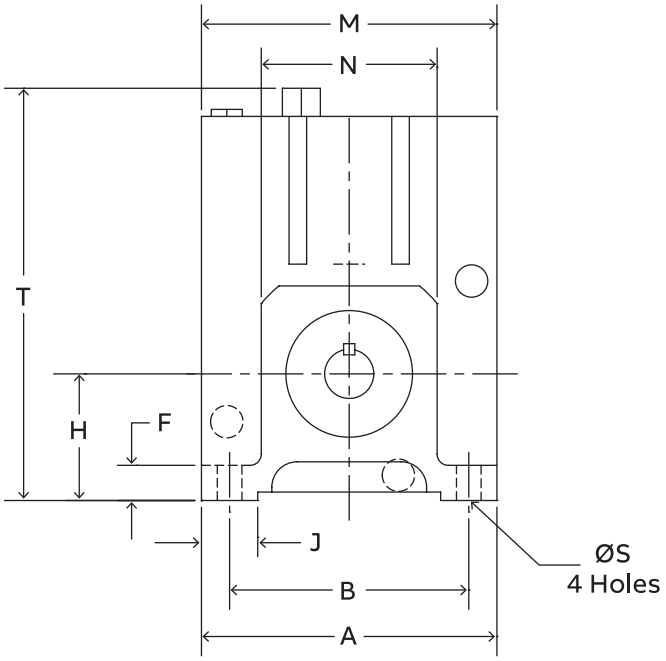

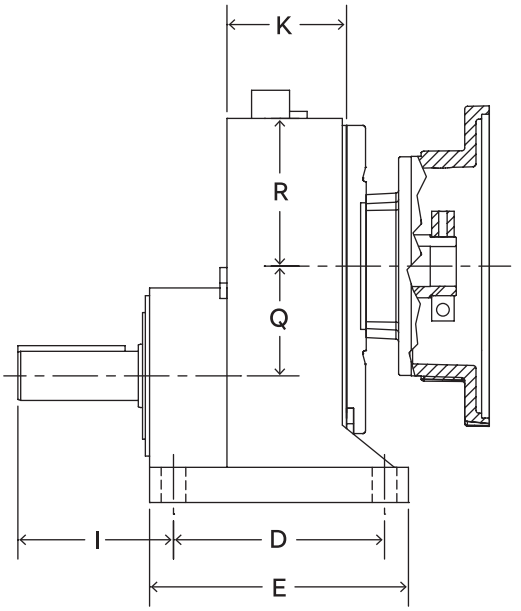

	Mounting dimensions										Outline dimensions				
	A	B	D	E	F	H	J	Ø S	I	K	M	N	R	T	Q
38	6.1	4.92	4.33	5.4	0.7	2.2	1.4	0.43	2.9	2.34	5.1	3.6	2.6	6.7	1.93
48	6.7	5.31	4.72	6.0	0.8	3.2	1.5	0.53	3.8	2.60	6.7	3.8	3.4	9.9	2.54
68	8.3	6.69	5.91	7.3	1.0	3.6	1.6	0.69	4.4	3.35	8.3	5.0	4.2	11.6	3.07
88	8.46	10.3	6.30	8.1	1.2	4.0	2.4	0.69	4.4	3.86	10.3	6.3	5.2	13.8	3.9

Clamp collar – NEMA/IEC dimensions

HB_1CN_
HB_1CI_

C-face – foot mounted

Single reduction

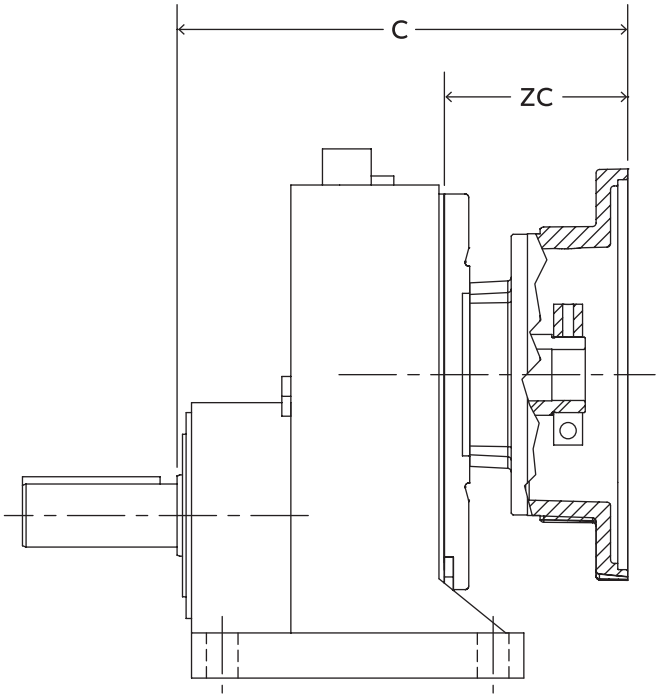

NEMA clamp collar motor dimensions

Reducer size	Reducer stage	56C		140TC		180TC		210TC		250TC	
		C	ZC	C	ZC	C	ZC	C	ZC	C	ZC
38	1	7.8	3.5	8.5	4.2	8.8*	4.5	–	–	–	–
48	1	7.6	3.3	8.3	3.9	9.9	5.5	–	–	–	–
68	1	8.9	3.0	9.6	5.2	11.0	5.2	12.9	7.1	–	–
88	1	–	–	9.5	3.1	10.9	4.5	12.8	6.4	12.7	6.3

IEC clamp collar motor dimensions

Reducer size	Reducer stage	71D		80D		90D		100D		112D		132D		160D	
		C	ZC	C	ZC	C	ZC	C	ZC	C	ZC	C	ZC	C	ZC
38	1	7.1	2.8	8.1	3.7	8.1	3.7	8.4*	4.0	–	–	–	–	–	–
48	1	6.9	2.6	7.9	3.5	7.9	3.5	8.2	3.8	8.5	4.1	–	–	–	–
68	1	8.2	2.3	9.1	3.3	9.1	3.3	9.4	3.6	9.7	3.8	11.3	5.4	–	–
88	1	–	–	–	–	9.1	2.7	9.3	2.9	9.5	3.1	11.1	4.7	12.8	6.4

* Riser block required

Three-piece coupled – NEMA/IEC dimensions

HB_1LN_
HB_1LI_

C-face – foot mounted
Single reduction

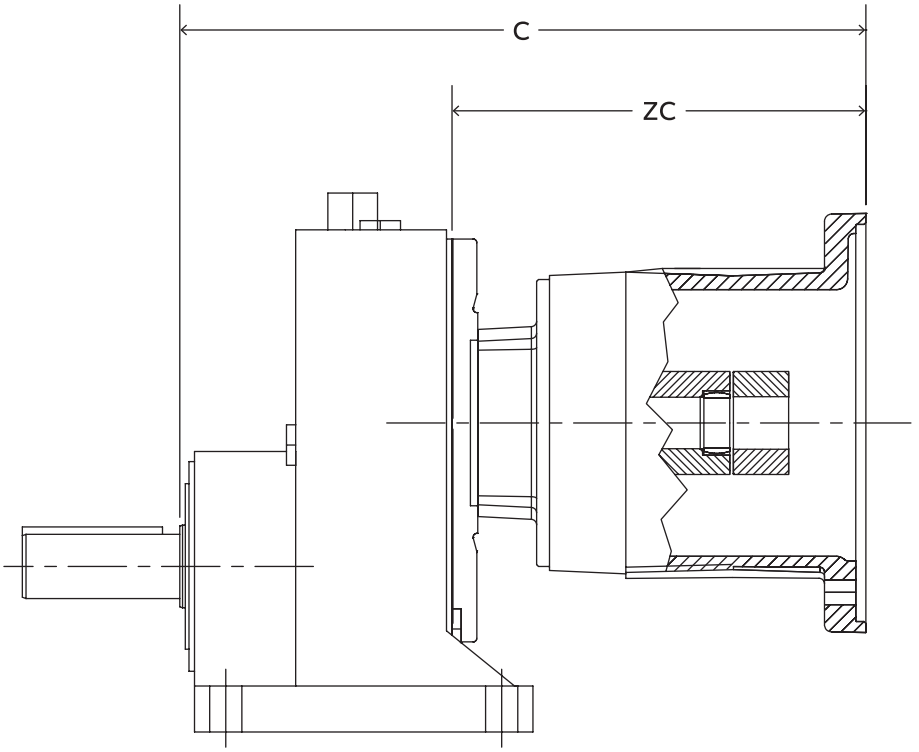

NEMA Three-piece coupled motor dimensions

Reducer size	Reducer stage	56C		140TC		180TC		210TC		250TC	
		C	ZC	C	ZC	C	ZC	C	ZC	C	ZC
38	1	11.0	6.6	12.4	8.0	–	–	–	–	–	–
48	1	10.8	6.4	12.2	7.8	13.5	9.1	–	–	–	–
68	1	12.0	6.2	13.4	7.6	14.6	8.8	16.6	10.7	–	–
88	1	–	–	13.4	7.0	14.5	8.1	16.4	10.0	18.4	12.0

IEC Three-piece coupled motor dimensions

Reducer size	Reducer stage	71D		80D		90D		100D		112D		132D		160D	
		C	ZC	C	ZC	C	ZC	C	ZC	C	ZC	C	ZC	C	ZC
38	1	–	–	12.3	8	12.3	8	13.2*	8.8	–	–	–	–	–	–
48	1	–	–	12.1	7.7	12.1	7.7	13.0	8.6	13.00	8.6	–	–	–	–
68	1	–	–	13.4	7.5	13.4	7.5	14.2	8.4	14.1	8.3	16.5	10.7	–	–
88	1	–	–	–	–	13.3	6.9	14.1	7.7	13.9	7.5	16.4	10	19	12.6

* Riser block required

Output shaft dimensions

C-face – foot mounted

Double and triple reduction

HB_2C_
HB_3C_
HB_2L_
HB_3L_

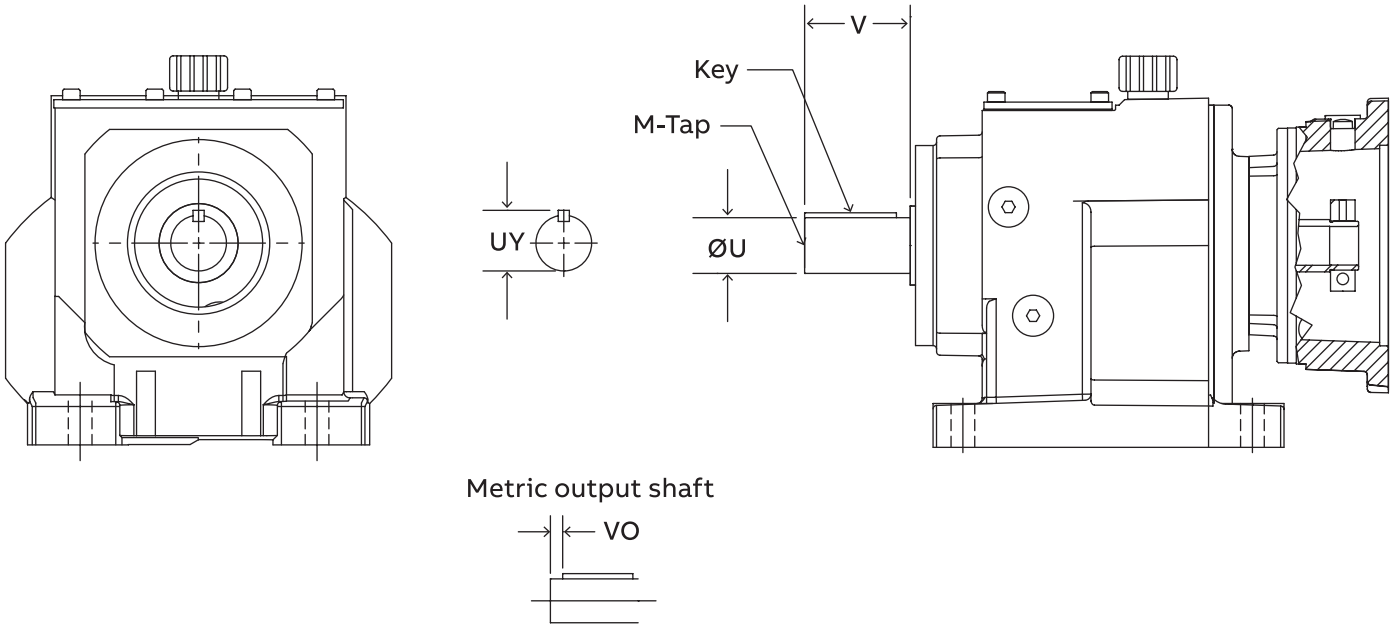

	Standard inch output shaft						Standard metric output shaft						
	Ø U	Tol.	UY	V	Key	M-Tap	Ø U	Tol.	UY	V	Vo	Key	M-Tap
38	1.000	+0.0000 -0.0005	1.11	1.97	1/4 x 1/4 x 1-5/8	3/8-16 UNC x 0.87	25	+0.015 +0.002	28	50	7	8 x 7 x 40	M10 x 22
48	1.250	+0.0000 -0.0005	1.36	2.36	1/4 x 1/4 x 2	3/8-16 UNC x 0.87	30	+0.015 +0.002	33	60	7	8 x 7 x 50	M10 x 22
58	1.375	+0.0000 -0.0005	1.49	2.76	5/16 x 5/16 x 2-1/8	1/2-13 UNC x 1.12	35	+0.014 +0.002	38	70	7	10 x 8 x 56	M12 x 28
68	1.625	+0.0000 -0.0010	1.79	3.15	3/8 x 3/8 x 2-5/8	5/8-11 UNC x 1.42	40	+0.015 +0.002	43	90	5	12 x 8 x 70	M10 x 36
88	2.125	+0.0000 -0.0010	2.35	3.94	1/2 x 1/2 x 3-1/4	3/4-10 x UNC x 1.65	50	+0.018 +0.002	54	100	10	14 x 9 x 80	M16 X 36
108	2.375	+0.0000 -0.0010	2.65	4.72	5/8 x 5/8 x 3-15/16	3/4-10 x UNC x 1.65	60	+0.030 +0.011	64	120	10	18 x 11 x 100	M20 x 42
128	2.875	+0.0000 -0.0010	3.20	5.51	3/4 x 3/4 x 4-1/2	3/4-10 x UNC x 1.65	70	+0.030 +0.011	75	140	15	20 x 12 x 110	M20 x 42
148	3.625	+0.0000 -0.0010	4.01	6.69	7/8 x 7/8 x 5-5/8	1-8 UNC x 1.97	90	+0.035 +0.013	95	170	15	25 x 14 x 140	M24 x 50
168	4.000	+0.0000 -0.0010	4.44	8.27	1 x 1 x 7-1/8	1-8 UNC x 1.97	100	+0.035 +0.013	106	210	15	28 x 16 x 180	M24 x 50

Optional output shaft page ILH-227

Gearcase dimensions

C-face – foot mounted

Double and triple reduction

HB_2C_
HB_3C_
HB_2L_
HB_3L_

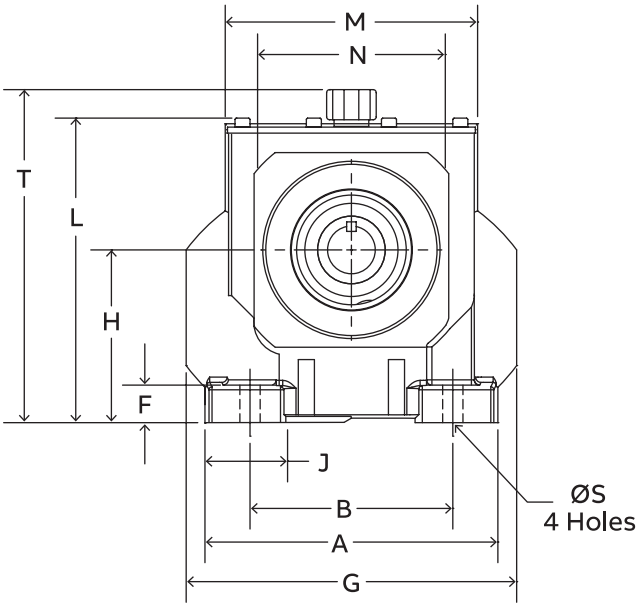

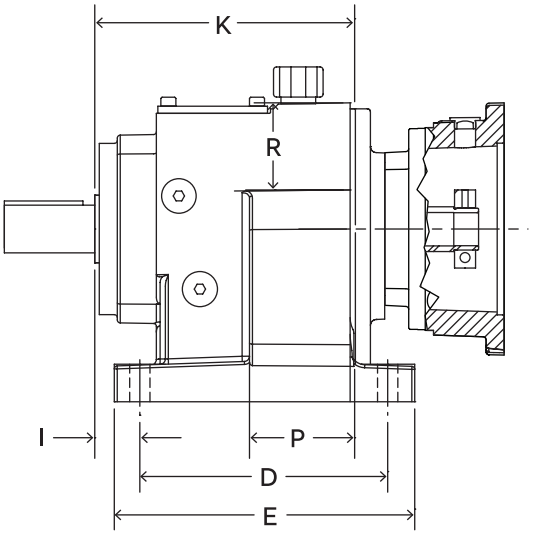

	Mounting dimensions										Outline dimensions							
	A	B	D	E	F	G	H	J	ØS	I	K	P	L	M	N	R	T	Q
38	5.77	4.33	5.12	6.30	0.79	6.42	3.54	1.33	0.39	0.98	5.51	2.33	6.21	5.07	3.77	1.83	-	0
48	7.68	5.32	6.50	7.87	0.98	8.66	4.53	2.17	0.53	1.18	6.81	2.76	7.98	6.61	4.92	2.28	8.73	0
58	8.27	5.91	7.68	9.25	1.12	9.80	5.12	2.36	0.55	1.09	7.58	3.02	9.00	7.48	5.58	2.47	9.77	0
68	9.25	6.69	8.07	9.65	1.18	10.35	5.51	2.36	0.69	1.38	8.23	3.27	9.65	8.41	6.32	3.03	10.58	0
88	11.42	8.47	10.24	12.21	1.77	13.07	7.09	2.95	0.69	1.58	10.47	4.26	12.21	10.24	7.87	3.70	13.17	0
108	13.39	9.84	12.21	14.37	1.97	16.14	8.86	3.58	0.87	1.56	12.24	4.94	15.32	12.05	9.85	4.24	16.20	0
128	15.75	11.42	14.57	17.32	2.17	18.19	9.84	4.33	1.02	1.77	14.72	5.63	17.13	14.33	11.82	4.89	18.08	0
148	17.72	13.39	16.14	19.29	2.36	20.07	12.40	4.34	1.30	1.97	16.18	6.30	19.71	16.38	11.82	6.24	20.55	1.44
168	20.87	14.96	19.69	23.23	2.56	22.84	13.98	5.71	1.54	1.97	19.45	7.26	23.07	18.11	15.75	7.62	23.92	1.66

Clamp collar – NEMA/IEC dimensions

C-face – foot mounted

Double and triple reduction

HB_2CN_
HB_3CN_
HB_2CI_
HB_3CI_
HB_2L_
HB_3L_

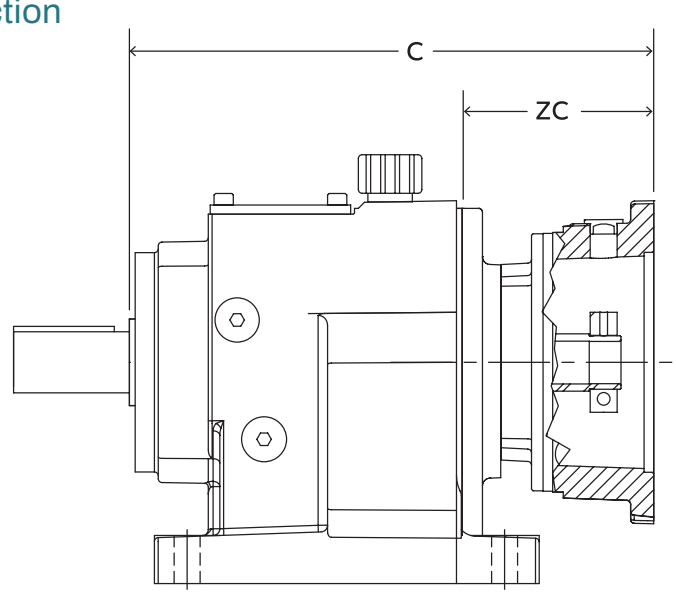

NEMA clamp collar motor dimensions

Reducer size	Reducer stage	56C		140TC		180TC		210TC		250TC		280TC		320TC		360TC	
		C	ZC	C	ZC	C	ZC	C	ZC	C	ZC	C	ZC	C	ZC	C	ZC
38	2	8.98	3.47	9.65	4.14	9.98*	4.47	–	–	–	–	–	–	–	–	–	–
	3	9.57	4.06	10.24	4.73	–	–	–	–	–	–	–	–	–	–	–	–
48	2	10.06	3.25	10.73	3.92	12.30	5.49	12.18	5.33	–	–	–	–	–	–	–	–
	3	10.73	3.92	11.40	4.59	12.97	6.16	–	–	–	–	–	–	–	–	–	–
58	2	10.49	2.91	11.16	3.58	12.38	4.8	14.68	7.1	–	–	–	–	–	–	–	–
	3	11.24	3.66	11.91	4.33	13.15	5.57	–	–	–	–	–	–	–	–	–	–
68	2	11.24	3.01	11.91	3.68	13.41	5.18	15.33	7.10	14.43	6.13	–	–	–	–	–	–
	3	11.97	3.74	12.64	4.41	14.21	5.98	–	–	–	–	–	–	–	–	–	–
88	2	–	–	13.56	3.09	14.92	4.45	16.85	6.38	16.74	6.27	17.39	6.88	–	–	–	–
	3	–	–	14.55	4.08	16.06	5.59	17.95	7.48	–	–	–	–	–	–	–	–
108	2	–	–	–	–	–	–	18.14	5.90	18.12	5.88	18.86	6.62	20.29	8.01	–	–
	3	–	–	16.08	3.84	17.48	5.24	19.42	7.18	19.28	7.04	–	–	–	–	–	–
128	2	–	–	–	–	–	–	20.22	5.50	19.96	5.24	20.87	6.15	22.44	7.72	24.21	9.41
	3	–	–	18.35	3.63	19.64	4.92	21.55	6.83	21.41	6.69	22.33	7.61	–	–	–	–
148	2	–	–	–	–	–	–	21.36	5.18	21.12	4.94	22.04	5.86	23.63	7.45	25.36	9.18
	3	–	–	–	–	20.98	4.80	22.86	6.68	22.62	6.44	23.54	7.36	25.13	8.95	–	–
168	2	–	–	–	–	–	–	24.07	4.62	23.83	4.38	24.75	5.30	26.34	6.89	28.07	8.62
	3	–	–	–	–	–	–	25.69	6.24	25.45	6.00	26.36	6.91	27.95	8.50	29.68	10.23

IEC clamp collar motor dimensions

Reducer size	Reducer stage	71D		80D		90D		100D		112D		132D		160D		180D		200D		225D		250D	
		C	ZC	C	ZC	C	ZC	C	ZC	C	ZC	C	ZC	C	ZC	C	ZC	C	ZC	C	ZC	C	ZC
38	2	8.27	2.76	9.21*	3.70	9.21*	3.70	9.51*	4.00	–	–	–	–	–	–	–	–	–	–	–	–	–	–
	3	8.86	3.35	9.80*	4.29	9.80*	4.29	–	–	–	–	–	–	–	–	–	–	–	–	–	–	–	–
48	2	9.35	2.54	10.30	3.49	10.30	3.49	10.59*	3.78	10.93*	4.12	–	–	–	–	–	–	–	–	–	–	–	–
	3	10.02	3.21	10.96	4.15	10.96	4.15	11.26*	4.45	–	–	–	–	–	–	–	–	–	–	–	–	–	–
58	2	9.78	2.2	10.73	3.15	10.73	3.15	11.02	3.44	11.22	3.64	13.03	5.45	–	–	–	–	–	–	–	–	–	–
	3	10.53	2.95	11.48	3.9	11.48	3.9	11.77	4.19	–	–	–	–	–	–	–	–	–	–	–	–	–	–
68	2	10.53	2.30	11.48	3.25	11.48	3.25	11.77	3.54	12.03	3.80	13.64*	5.41	–	–	–	–	–	–	–	–	–	–
	3	11.26	3.03	12.21	3.98	12.21	3.98	12.50	4.27	–	–	–	–	–	–	–	–	–	–	–	–	–	–
88	2	–	–	–	–	13.13	2.66	13.33	2.86	13.54	3.07	15.16	4.69	16.85	6.38	–	–	–	–	–	–	–	–
	3	13.17	2.70	14.11	3.64	14.11	3.64	14.41	3.94	14.69	4.22	16.26	5.79	–	–	–	–	–	–	–	–	–	–
108	2	–	–	–	–	–	–	–	–	14.86	2.62	16.44	4.20	18.17	5.93	18.70	6.46	19.09	6.85	–	–	–	–
	3	–	–	15.65	3.41	15.65	3.41	15.94	3.70	16.10	3.86	17.72	5.48	19.33	7.09	–	–	–	–	–	–	–	–
128	2	–	–	–	–	–	–	–	–	–	–	18.50	3.78	20.00	5.28	20.65	5.93	21.04	6.32	–	–	–	–
	3	–	–	–	–	17.85	3.13	18.15	3.43	18.27	3.55	19.84	5.12	21.46	6.74	22.11	7.39	22.50	7.78	–	–	–	–
148	2	–	–	–	–	–	–	–	–	–	–	19.65	3.47	21.16	4.98	21.81	5.63	22.20	6.02	–	–	–	–
	3	–	–	–	–	–	–	19.41	3.23	19.61	3.43	21.14	4.96	22.66	6.48	23.31	7.13	23.70	7.52	–	–	–	–
168	2	–	–	–	–	–	–	–	–	–	–	22.34	2.89	23.86	4.41	24.51	5.06	24.90	5.45	–	–	–	–
	3	–	–	–	–	–	–	–	–	–	–	23.96	4.51	25.47	6.02	26.12	6.67	26.52	7.07	–	–	–	–

* Riser block is required

Three-piece coupled – NEMA/IEC dimensions

C-face – foot mounted

Double and triple reduction

HB_2LN_
HB_3LN_
HB_2LI_
HB_3LI_

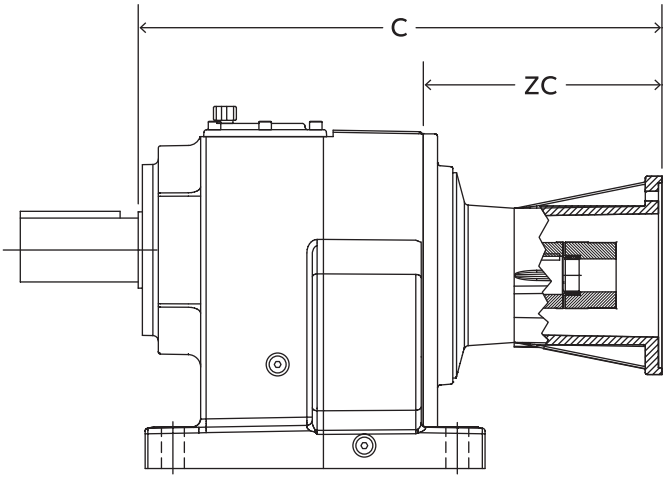

NEMA Three-piece coupled motor dimensions

Reducer size	Reducer stage	56C		140TC		180TC		210TC		250TC		280TC		320TC		360TC	
		C	ZC	C	ZC	C	ZC	C	ZC	C	ZC	C	ZC	C	ZC	C	ZC
38	2	12.11	6.60	13.52	8.01	–	–	–	–	–	–	–	–	–	–	–	–
	3	12.70	7.19	14.11	8.60	–	–	–	–	–	–	–	–	–	–	–	–
48	2	13.19	6.38	14.61	7.80	15.89	9.08	–	–	–	–	–	–	–	–	–	–
	3	13.86	7.05	15.28	8.46	16.56	9.75	–	–	–	–	–	–	–	–	–	–
58	2	14.08	6.5	15.04	7.46	16.18	8.6	18.52	10.94	–	–	–	–	–	–	–	–
	3	14.37	6.97	15.79	8.21	16.95	9.37	–	–	–	–	–	–	–	–	–	–
68	2	14.37	6.14	15.79	7.56	16.99	8.76	19.14	10.91	–	–	–	–	–	–	–	–
	3	13.88	3.41	14.55	4.08	16.06	5.59	17.95	7.48	–	–	–	–	–	–	–	–
88	2	–	–	17.44	6.97	18.50	8.03	20.65	10.18	22.60	12.13	–	–	–	–	–	–
	3	17.01	6.54	18.43	7.96	19.64	9.17	21.75	11.28	–	–	–	–	–	–	–	–
108	2	–	–	–	–	–	–	21.93	9.69	23.92	11.68	26.61	14.37	–	–	–	–
	3	–	–	19.96	7.72	21.06	8.82	23.21	10.97	25.08	12.84	–	–	–	–	–	–
128	2	–	–	–	–	–	–	24.00	9.28	25.75	11.03	28.56	13.84	31.06	16.34	–	–
	3	–	–	22.17	7.45	23.22	8.50	25.33	10.61	27.20	12.48	30.02	15.30	–	–	–	–
148	2	–	–	–	–	–	–	25.14	8.96	26.91	10.73	29.72	13.54	32.22	16.04	32.27	17.09
	3	–	–	–	–	24.57	8.39	26.63	10.45	28.41	12.23	31.22	15.04	33.72	17.54	–	–
168	2	–	–	–	–	–	–	27.84	8.39	29.61	10.16	32.42	12.97	34.92	15.47	35.97	16.52
	3	–	–	–	–	–	–	29.45	10.00	31.22	11.77	34.04	14.59	36.54	17.09	37.58	18.13

IEC Three-piece coupled motor dimensions

Reducer size	Reducer stage	71D		80D		90D		100D		112D		132D		160D		180D		200D		225D		250D	
		C	ZC	C	ZC	C	ZC	C	ZC	C	ZC	C	ZC	C	ZC	C	ZC	C	ZC	C	ZC	C	ZC
38	2	–	–	13.44*	7.93	13.44*	7.93	14.33*	8.82	–	–	–	–	–	–	–	–	–	–	–	–	–	–
	3	–	–	14.04*	8.53	14.04*	8.53	–	–	–	–	–	–	–	–	–	–	–	–	–	–	–	–
48	2	–	–	14.53	7.72	14.53	7.72.	15.41*	8.60	15.37*	8.56	–	–	–	–	–	–	–	–	–	–	–	–
	3	–	–	15.20	8.39	15.20	8.39	16.08*	9.27	–	–	–	–	–	–	–	–	–	–	–	–	–	–
58	2	–	–	14.96	7.38	14.96	7.38	15.85	8.27	15.67	8.09	18.28	10.7	–	–	–	–	–	–	–	–	–	–
	3	–	–	15.71	8.13	15.71	8.13	16.60	9.02	–	–	–	–	–	–	–	–	–	–	–	–	–	–
68	2	–	–	15.71	7.48	15.71	7.48	16.60	8.37	16.48	8.25	18.90*	10.67	–	–	–	–	–	–	–	–	–	–
	3	–	–	16.44	8.21	16.44	8.21	17.32	9.09	–	–	–	–	–	–	–	–	–	–	–	–	–	–
88	2	–	–	–	–	17.36	6.89	18.15	7.68	17.99	7.52	20.41	9.94	23.03	12.56	–	–	–	–	–	–	–	–
	3	–	–	18.35	7.88	18.35	7.88	19.23	8.76	19.13	8.66	21.52	11.05	–	–	–	–	–	–	–	–	–	–
108	2	–	–	–	–	–	–	–	–	19.31	7.07	21.69	9.45	24.35	12.11	26.34	14.10	26.38	14.14	–	–	–	–
	3	–	–	19.88	7.64	19.88	7.64	20.77	8.53	20.55	8.31	22.97	10.73	25.51	13.27	–	–	–	–	–	–	–	–
128	2	–	–	–	–	–	–	–	–	–	–	23.76	9.04	26.18	11.46	28.29	13.57	28.83	14.11	31.61	16.89	–	–
	3	–	–	–	–	22.09	7.37	22.97	8.25	22.72	8.00	25.10	10.38	27.64	12.92	29.74	15.02	29.78	15.06	–	–	–	–
148	2	–	–	–	–	–	–	–	–	–	–	27.90	8.72	27.34	11.16	29.45	13.27	29.49	13.31	32.78	16.60	32.95	16.77
	3	–	–	–	–	–	–	24.23	8.05	24.06	7.88	26.40	10.22	28.84	12.66	30.94	14.76	30.98	14.80	34.27	18.09	–	–
168	2	–	–	–	–	–	–	–	–	–	–	27.60	8.15	30.04	10.59	32.15	12.70	32.19	12.74	35.47	16.02	35.65	16.20
	3	–	–	–	–	–	–	–	–	–	–	29.21	9.76	31.65	12.20	33.76	14.31	33.80	14.35	37.09	17.64	37.26	17.81

* Riser block is required

Clamp collar – NEMA/IEC dimensions

C-face – foot mounted

Four- and five-stage reduction

HB_4C_
HB_5C_
HB_4L_
HB_5L_

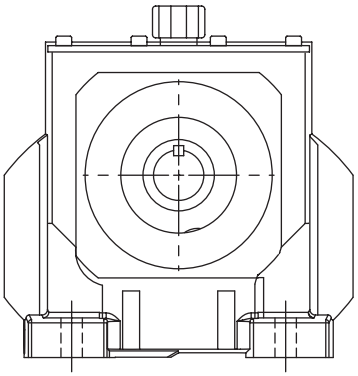

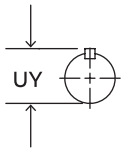

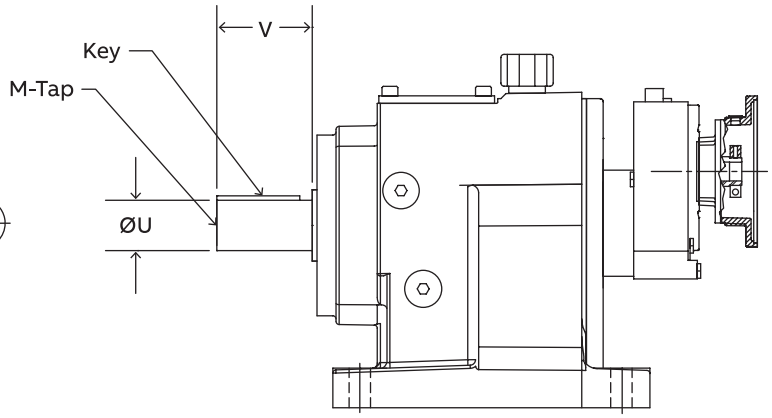

4 Stage reduction

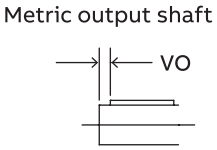

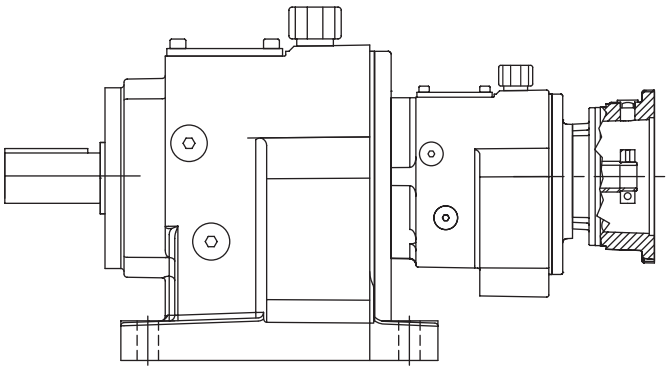

5 Stage reduction

	Standard inch output shaft						Standard metric output shaft						
	Ø U	Tol.	UY	V	Key	M-Tap	Ø U	Tol.	UY	V	Vo	Key	M-Tap
38	1.000	+0.0000 -0.0005	1.11	1.97	1/4 x 1/4 x 1-5/8	3/8-16 UNC x 0.87	25	+0.015 +0.002	28	50	7	8 x 7 x 40	M10 x 22
48	1.250	+0.0000 -0.0005	1.36	2.36	1/4 x 1/4 x 2	3/8-16 UNC x 0.87	30	+0.015 +0.002	33	60	7	8 x 7 x 50	M10 x 22
68	1.625	+0.0000 -0.0010	1.79	3.15	3/8 x 3/8 x 2-5/8	5/8-11 UNC x 1.42	40	+0.018 +0.002	43	90	5	12 x 8 x 70	M10 x 36
88	2.125	+0.0000 -0.0010	2.35	3.94	1/2 x 1/2 x 3-1/4	3/4-10 x UNC x 1.65	50	+0.018 +0.002	54	100	10	14 x 9 x 80	M16 X 36
108	2.375	+0.0000 -0.0010	2.65	4.72	5/8 x 5/8 x 3-15/16	3/4-10 x UNC x 1.65	60	+0.030 +0.011	64	120	10	18 x 11 x 100	M20 x 42
128	2.875	+0.0000 -0.0010	3.20	5.51	3/4 x 3/4 x 4-1/2	3/4-10 x UNC x 1.65	70	+0.030 +0.011	75	140	15	20 x 12 x 110	M20 x 42
148	3.625	+0.0000 -0.0010	4.01	6.69	7/8 x 7/8 x 5-5/8	1-8 UNC x 1.97	90	+0.035 +0.013	95	170	15	25 x 14 x 140	M24 x 50
168	4.000	+0.0000 -0.0010	4.44	8.27	1 x 1 x 7-1/8	1-8 UNC x 1.97	100	+0.035 +0.013	106	210	15	28 x 16 x 180	M24 x 50

Optional output shaft page ILH-227

Gearcase dimensions

C-face – foot mounted

Four- and five-stage reduction

HB_4C_
HB_5C_
HB_4L_
HB_5L_

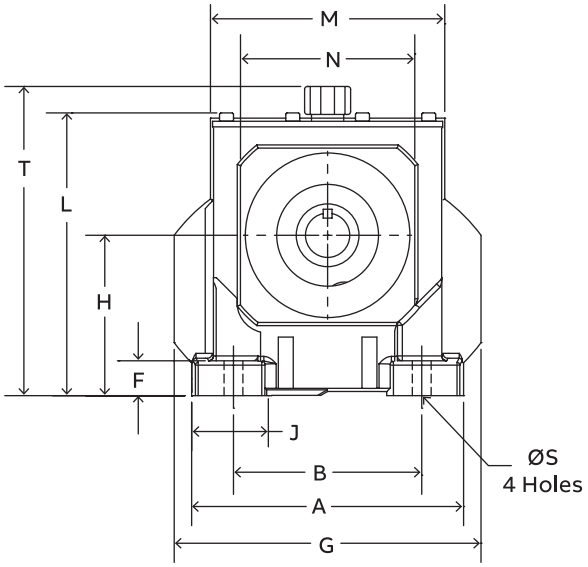

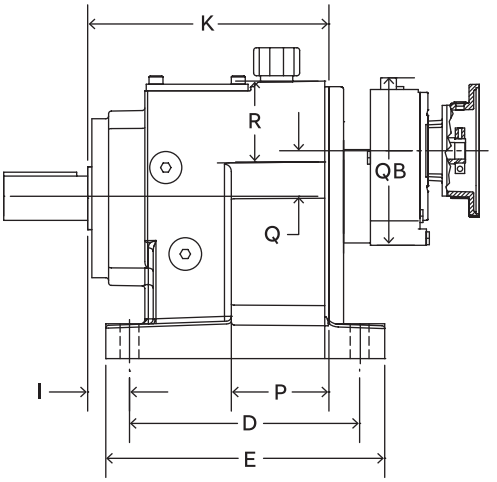

4 Stage reduction

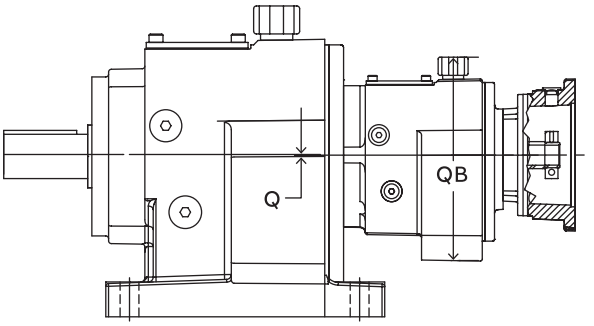

5 Stage reduction

	Mounting dimensions										Outline dimensions							4 stage		5 stage	
	A	B	D	E	F	G	H	J	ØS	I	K	P	L	M	N	R	T	Q	QB	Q	QB
38	5.77	4.33	5.12	6.30	0.79	6.42	3.54	1.33	0.39	0.98	5.51	2.33	6.21	5.07	3.77	1.83	-	1.93	7.83	0	6.29
48	7.68	5.32	6.50	7.87	0.98	8.66	4.53	2.17	0.53	1.18	6.81	2.76	7.98	6.61	4.92	2.28	8.73	1.93	7.83	0	6.29
68	9.25	6.69	8.07	9.65	1.18	10.35	5.51	2.36	0.69	1.38	8.23	3.27	9.65	8.41	6.32	3.03	10.58	1.93	7.83	0	6.29
88	11.42	8.47	10.24	12.21	1.77	13.07	7.09	2.95	0.69	1.58	10.47	4.26	12.21	10.24	7.87	3.70	13.17	2.54	9.84	0	8.86
108	13.39	9.84	12.21	14.37	1.97	16.14	8.86	3.58	0.87	1.56	12.24	4.94	15.32	12.05	9.85	4.24	16.20	2.54	9.84	0	8.86
128	15.75	11.42	14.57	17.32	2.17	18.19	9.84	4.33	1.02	1.77	14.72	5.63	17.13	14.33	11.82	4.89	18.08	3.07	11.57	0	8.86
148	17.72	13.39	16.14	19.29	2.36	20.07	12.40	4.34	1.30	1.97	16.18	6.30	19.71	16.38	11.82	6.24	20.55	1.63	11.57	1.44	8.86
168	20.87	14.96	19.69	23.23	2.56	22.84	13.98	5.71	1.54	1.97	19.45	7.26	23.07	18.11	15.75	7.62	23.92	1.41	11.57	1.66	10.68

Clamp collar NEMA/IEC dimensions

C-face – foot mounted

Four- and five-stage reduction

HB_4CN_
HB_5CN_
HB_4CI_
HB_5CI_

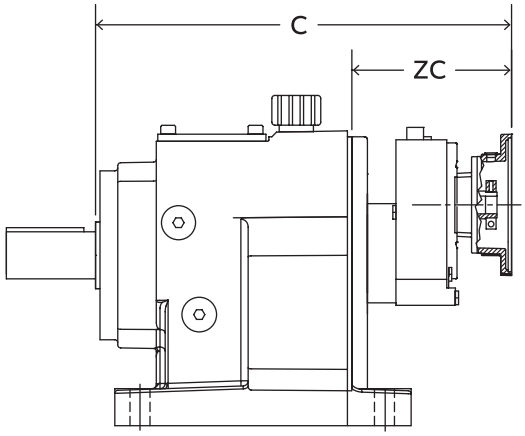

4 Stage reduction

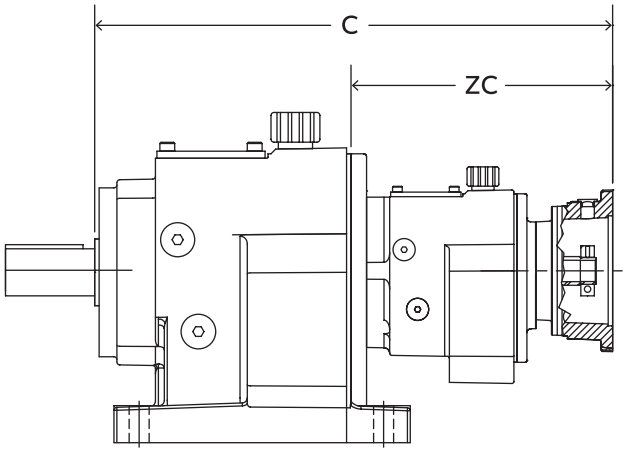

5 Stage reduction

NEMA clamp collar motor dimensions

Reducer size	Reduction stage	56C		140TC		180TC		210TC	
		C	ZC	C	ZC	C	ZC	C	ZC
38	4	13.96	8.45	14.66	9.15	14.96	9.45	–	–
	5	15.11	9.60	15.78	10.27	16.11	10.60	–	–
48	4	14.87	8.06	15.57	8.76	15.87	9.06	–	–
	5	16.02	9.21	16.69	9.88	17.02	10.21	–	–
68	4	16.23	8.00	16.93	8.70	17.23	9.00	–	–
	5	17.38	9.15	18.05	9.82	18.38	10.15	–	–
88	4	18.29	7.82	18.89	8.42	20.49	10.02	–	–
	5	20.63	10.16	21.30	10.83	22.87	12.40	–	–
108	4	20.38	8.14	20.98	8.74	22.58	10.34	–	–
	5	22.25	10.01	22.92	10.68	24.49	12.25	–	–
128	4	23.28	8.56	23.98	9.26	25.48	10.76	27.38	12.66
	5	24.52	9.80	25.19	10.47	26.76	12.04	–	–
148	4	24.59	8.41	25.29	9.11	26.79	10.61	28.69	12.51
	5	25.82	9.64	26.49	10.31	28.06	11.88	–	–
168	4	28.47	9.02	29.17	9.72	30.67	11.22	32.57	13.12
	5	30.84	11.39	31.51	12.06	33.01	13.56	34.93	15.48

IEC clamp collar motor dimensions

Reducer size	Reduction stage	71D		80D		90D		100D		112D		132D	
		C	ZC	C	ZC	C	ZC	C	ZC	C	ZC	C	ZC
38	4	13.26	7.75	14.16	8.65	14.16	8.65	14.46	8.95	–	–	–	–
	5	14.40	8.89	15.34	9.83	15.34	9.83	15.64	10.13	–	–	–	–
48	4	14.17	7.36	15.07	8.26	15.07	8.26	15.37	8.56	–	–	–	–
	5	15.31	8.50	16.25	9.44	16.25	9.44	16.55	9.74	–	–	–	–
68	4	15.53	7.30	16.43	8.20	16.43	8.20	16.73	8.50	–	–	–	–
	5	16.67	8.44	17.61	9.38	17.61	9.38	17.91	9.68	–	–	–	–
88	4	17.59	7.12	18.49	8.02	18.49	8.02	18.79	8.32	19.09	8.62	–	–
	5	19.92	9.45	20.87	10.40	20.87	10.40	21.16	10.69	21.50	11.03	–	–
108	4	19.68	7.44	20.58	8.34	20.58	8.34	20.88	8.64	21.18	8.94	–	–
	5	21.54	9.30	22.49	10.25	22.49	10.25	22.78	10.54	23.12	10.88	–	–
128	4	22.58	7.86	23.58	8.86	23.58	8.86	23.88	9.16	24.08	9.36	25.68	10.96
	5	23.81	9.09	24.76	10.04	24.76	10.04	25.05	10.33	25.39	10.67	–	–
148	4	23.89	7.71	24.89	8.71	24.89	8.71	25.19	9.01	25.39	9.21	26.99	10.81
	5	25.11	8.93	26.06	9.88	26.06	9.88	26.35	10.17	26.69	10.51	–	–
168	4	27.77	8.32	28.77	9.32	28.77	9.32	29.07	9.62	29.27	9.82	30.87	11.42
	5	30.13	10.68	31.08	11.63	31.08	11.63	31.37	11.92	31.63	12.18	33.24	13.79

Three-piece coupled NEMA/IEC dimensions

C-face – foot mounted

Four- and five-stage reduction

HB_4LN_
HB_5LN_
HB_4LI_
HB_5LI_

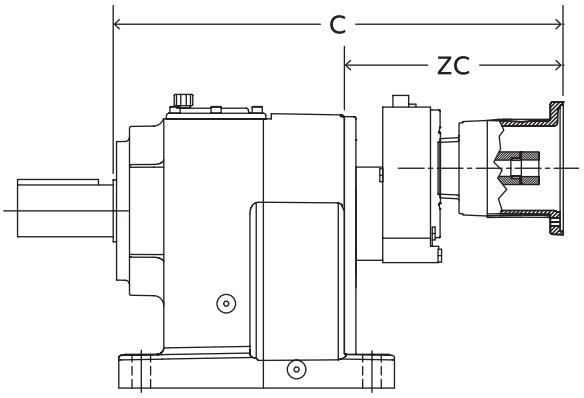

4 Stage reduction

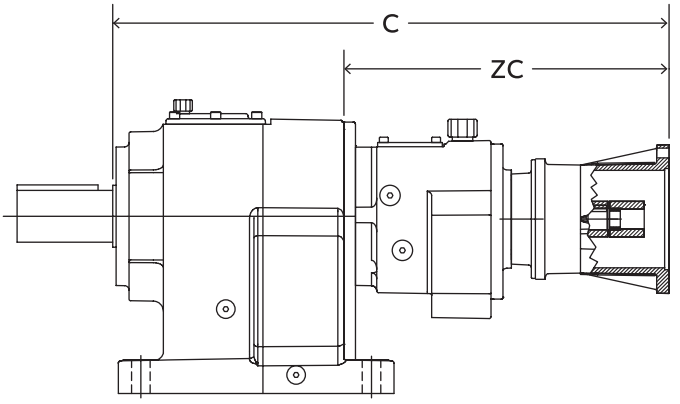

5 Stage reduction

NEMA Three-piece coupled motor dimensions

Reducer size	Reduction stage	56C		140TC		180TC		210TC	
		C	ZC	C	ZC	C	ZC	C	ZC
38	4	17.06	11.55	18.46	12.95	–	–	–	–
	5	18.24	12.73	19.65	14.14	–	–	–	–
48	4	17.97	11.16	19.37	12.56	–	–	–	–
	5	19.15	12.34	20.56	13.75	–	–	–	–
68	4	19.33	11.10	20.73	12.50	–	–	–	–
	5	20.51	12.28	21.92	13.69	–	–	–	–
88	4	21.39	10.92	22.79	12.32	24.09	13.62	–	–
	5	23.76	13.29	25.18	14.71	26.46	15.99	–	–
108	4	23.48	11.24	24.88	12.64	26.18	13.94	–	–
	5	25.38	13.14	26.80	14.56	28.08	15.84	–	–
128	4	26.48	11.76	27.88	13.16	29.08	14.36	30.98	16.26
	5	27.65	12.93	29.07	14.35	30.35	15.63	–	–
148	4	27.79	11.61	29.19	13.01	30.39	14.21	32.29	16.11
	5	28.95	12.77	30.37	14.19	31.65	15.47	–	–
168	4	31.67	12.22	33.07	13.62	34.27	14.82	36.17	16.72
	5	33.97	14.52	35.39	15.94	36.59	17.14	38.74	19.29

IEC Three-piece coupled motor dimensions

Reducer size	Reduction stage	71D		80D		90D		100D		112D		132D	
		C	ZC	C	ZC	C	ZC	C	ZC	C	ZC	C	ZC
38	4	–	–	18.46	12.95	18.46	12.95	19.26	13.75	–	–	–	–
	5	–	–	19.57	14.06	19.57	14.06	20.46	14.95	–	–	–	–
48	4	–	–	19.37	12.56	19.37	12.56	20.17	13.36	–	–	–	–
	5	–	–	20.48	13.67	20.48	13.67	21.37	14.56	–	–	–	–
68	4	–	–	20.73	12.50	20.73	12.50	21.53	13.30	–	–	–	–
	5	–	–	21.84	13.61	21.84	13.61	22.73	14.50	–	–	–	–
88	4	–	–	22.69	12.22	22.69	12.22	23.59	13.12	23.59	13.12	–	–
	5	–	–	25.10	14.63	25.10	14.63	25.98	15.51	25.94	15.47	–	–
108	4	–	–	24.78	12.54	24.78	12.54	25.68	13.44	25.68	13.44	–	–
	5	–	–	26.72	14.48	26.72	14.48	27.60	15.36	27.56	15.32	–	–
128	4	–	–	–	–	27.78	13.06	28.68	13.96	28.58	13.86	30.98	16.26
	5	–	–	28.99	14.27	28.99	14.27	29.87	15.15	29.83	15.11	–	–
148	4	–	–	–	–	29.09	12.91	29.99	13.81	29.89	13.71	32.29	16.11
	5	–	–	30.29	14.11	30.29	14.11	31.17	14.99	31.13	14.95	–	–
168	4	–	–	–	–	32.97	13.52	33.87	14.42	33.77	14.32	36.17	16.72
	5	–	–	35.31	15.86	35.31	15.86	36.20	16.75	36.08	16.63	38.50	19.05

Output shaft dimension

C-face – flange mounted

Single reduction

HF_1C_
HF_1L_

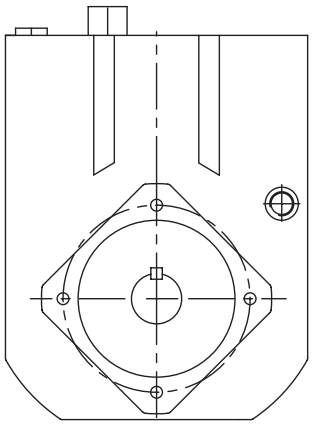

B14 Output flange

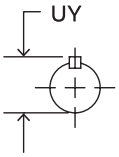

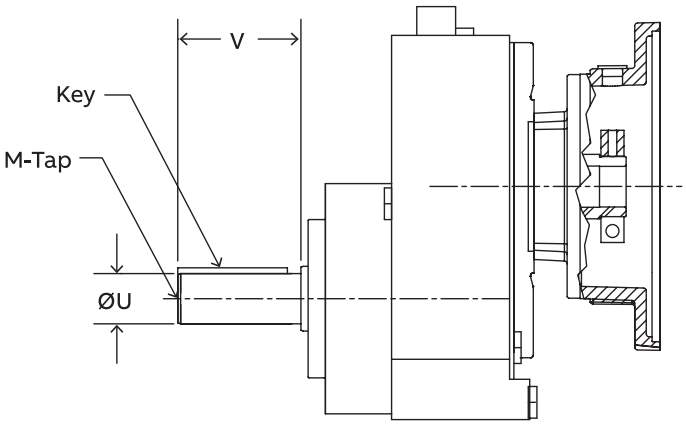

Metric output shaft

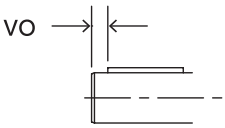

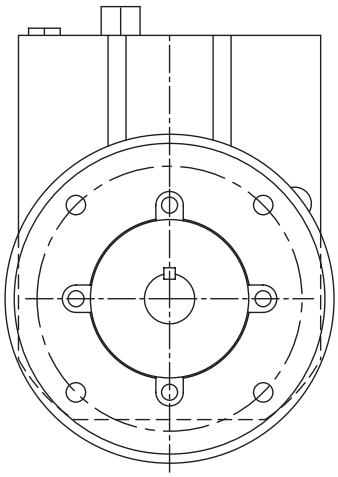

B5/NEMA Output flange

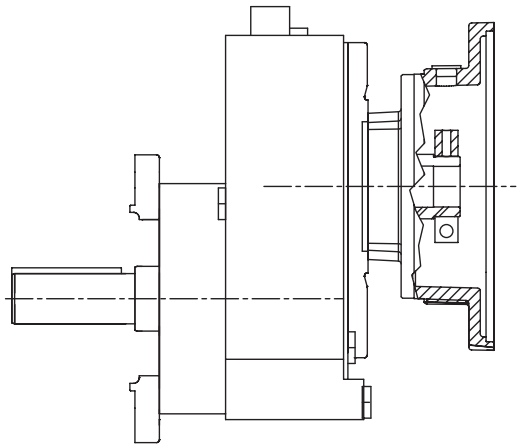

	Standard inch output shaft						Standard metric output shaft						
	Ø U	Tol.	UY	V	Key	M-Tap	Ø U	Tol.	UY	V	Vo	Key	M-Tap
38	0.875	+0.000 -0.001	0.95	2.24	3/16 x 3/16 x 1.50	5/16-18 UNC	20	+0.015 -0.002	22.5	40	5	6 x 6 x 30	M6 x 16
48	1.125	+0.000 -0.001	1.23	2.74	1/4 x 1/4 x 2.35	3/8-16 UNC	25	+0.015 -0.002	28	50	7	8 x 7 x 40	M10 x 22
68	1.375	+0.000 -0.001	1.51	3.37	5/16 x 5/16 x 3.00	3/8-16 UNC	30	+0.015 -0.002	33	60	7	8 x 7 x 50	M10 x 36
88	1.625	+0.000 -0.001	1.79	3.15	3/8 x 3/8 x 2.75	5/8-11 UNC	40	+0.018 -0.002	43	80	5	12 X 8 X 70	M16 x 36

Gearcase dimensions

C-face – flange mounted

Single reduction

HF_1C_
HF_1L_

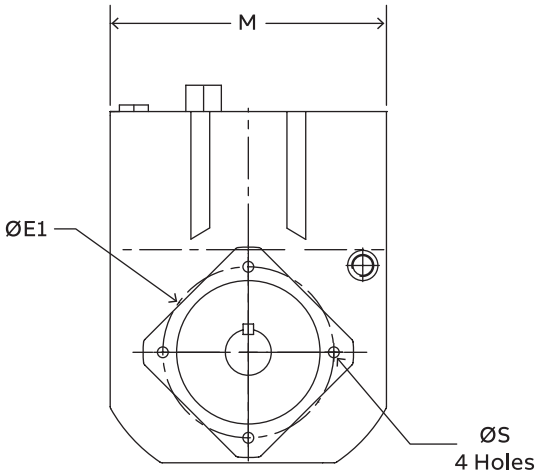

B14 Output flange

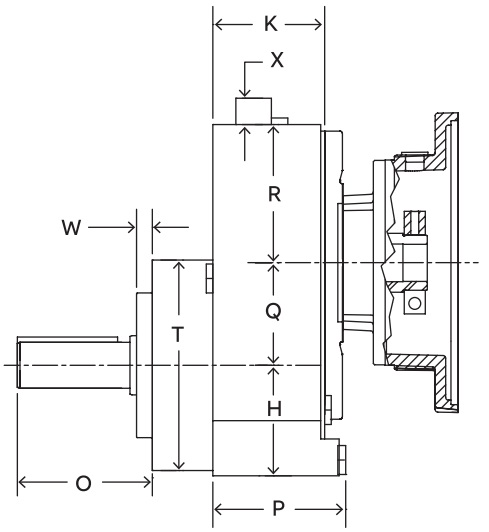

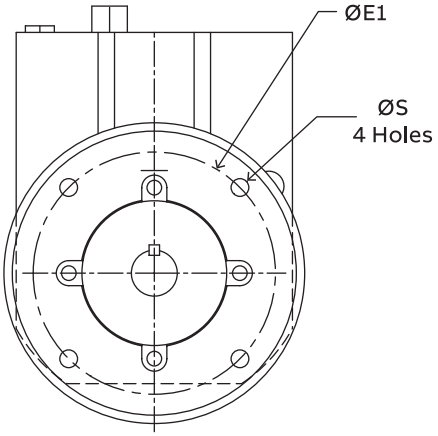

B5/NEMA Output flange

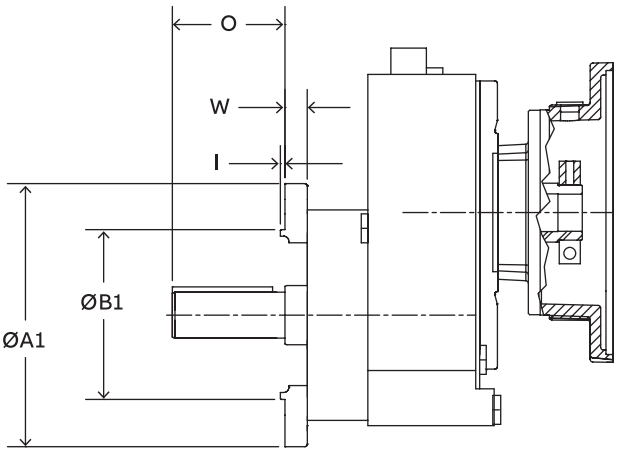

	Mounting dimensions					Outline dimensions							
	Ø B1	Ø E1	Ø S	W	O	H	K	P	M	R	T	Q	X
38	3.1496	3.937	M8 x 1.25	0.35	2.75	2.4	2.4	2.3	5.1	2.6	4.8	1.93	0.9
48	3.1496	3.937	M8 x 1.25	0.35	3.25	3.0	2.6	3.2	6.7	3.4	4.8	2.54	0.9
68	4.3307	5.118	M10 x 1.5	0.45	4.04	3.4	3.4	4.0	8.3	4.2	6.3	3.07	0.9
88	5.1181	6.496	M12 x 1.75	0.41	3.86	4.2	3.9	4.4	10.3	5.2	7.5	3.90	0.9

	Standard B5 flange dimensions							Optional B5 flange dimensions							NEMA flange dimensions						
	Ø A1	Ø B1	Ø E1	Ø S	I	W	O	Ø A1	Ø B1	Ø E1	Ø S	I	W	O	Ø A1	Ø B1	Ø E1	Ø S	I	W	O
38	6.3	4.3307	5.118	0.35	0.14	0.4	2.24	7.9	5.1181	6.496	0.43	0.14	0.5	2.24	6.5	4.500	5.875	0.41	0.15	0.7	2.12
48	6.3	4.3307	5.118	0.35	0.14	0.4	2.74	7.9	5.1181	6.496	0.43	0.14	0.5	2.74	9.0	8.500	7.250	0.53	0.26	0.4	2.88
68	7.9	5.1181	6.496	0.43	0.14	0.5	3.37	9.9	7.0866	8.465	0.53	0.16	0.6	3.37	9.0	8.500	7.250	0.53	0.26	0.7	3.38
88	9.9	7.0866	8.465	0.53	0.16	0.6	3.15	11.9	9.0551	10.433	0.53	0.16	0.7	3.15	–	–	–	–	–	–	–

Clamp collar NEMA/IEC dimensions

HF_1CN_
HF_1CI_

C-face – flange mounted
Single reduction

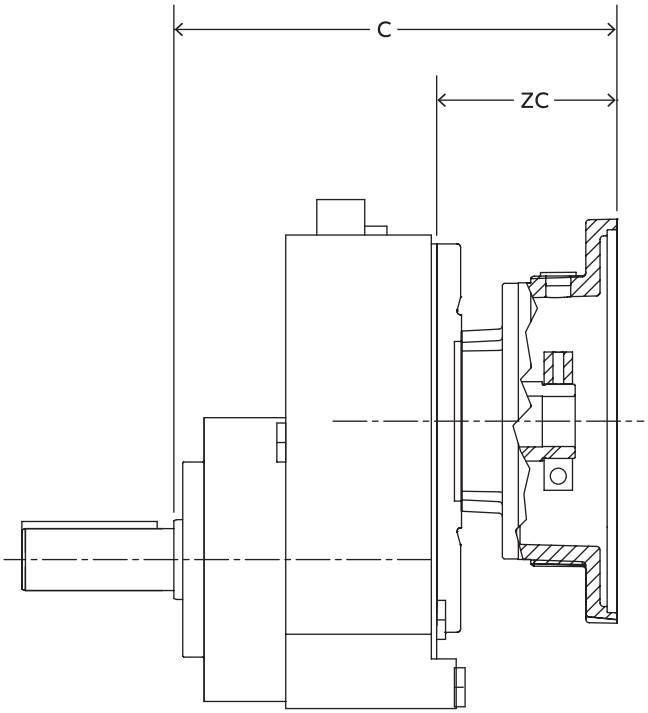

NEMA clamp collar motor dimensions

Reducer size	Reducer stage	56C		140TC		180TC		210TC		250TC	
		C	ZC	C	ZC	C	ZC	C	ZC	C	ZC
38	1	7.8	3.5	8.5	4.2	8.8	4.5	–	–	–	–
48	1	7.6	3.3	8.3	3.9	9.9	5.5	–	–	–	–
68	1	8.9	3.0	9.6	3.7	11.0	5.2	12.9	7.1	–	–
88	1	–	–	9.5	3.1	10.9	4.5	12.8	6.4	12.7	6.3

IEC clamp collar motor dimensions

Reducer size	Reducer stage	71D		80D		90D		100D		112D		132D		160D	
		C	ZC	C	ZC	C	ZC	C	ZC	C	ZC	C	ZC	C	ZC
38	1	7.1	2.8	8.1	3.7	8.1	3.7	8.4	4	–	–	–	–	–	–
48	1	6.9	2.6	7.9	3.5	7.9	3.5	8.2	3.8	8.5	4.1	–	–	–	–
68	1	8.2	2.3	9.1	3.3	9.1	3.3	9.4	3.6	9.7	3.8	11.3	5.4	–	–
88	1	–	–	–	–	9.1	2.7	9.3	2.9	9.5	3.1	11.1	4.7	12.8	6.4

Three-piece coupled NEMA/IEC dimensions

HF_1LN_
HF_1LI_

C-face – flange mounted
Single reduction

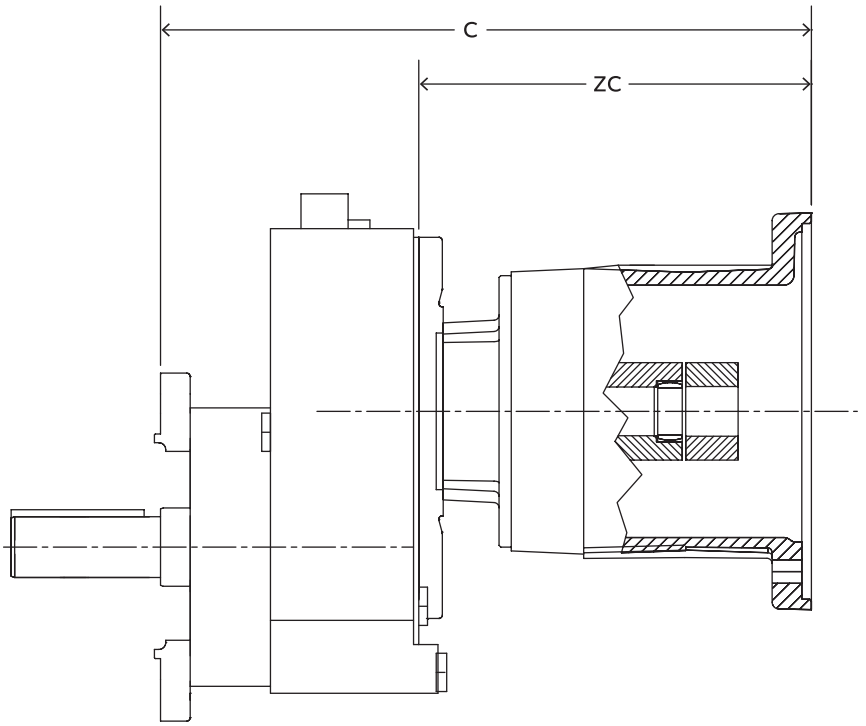

NEMA Three-piece coupled motor dimensions

Reducer size	Reducer stage	56C		140TC		180TC		210TC		250TC	
		C	ZC	C	ZC	C	ZC	C	ZC	C	ZC
38	1	11.0	6.6	12.4	8.0	–	–	–	–	–	–
48	1	10.8	6.4	12.2	7.8	13.5	9.1	–	–	–	–
68	1	12.0	6.2	13.4	7.6	14.6	8.8	16.6	10.7	–	–
88	1	–	–	13.4	7.0	14.5	8.1	16.4	10.0	18.4	12.0

IEC Three-piece coupled motor dimensions

Reducer size	Reducer stage	71D		80D		90D		100D		112D		132D		160D	
		C	ZC	C	ZC	C	ZC	C	ZC	C	ZC	C	ZC	C	ZC
38	1	–	–	12.3	8.0	12.3	8.0	13.2	8.8	–	–	–	–	–	–
48	1	–	–	12.1	7.7	12.1	7.7	13.0	8.6	13.0	8.6	–	–	–	–
68	1	–	–	–	–	13.4	7.5	14.2	8.4	14.1	8.3	16.5	10.7	–	–
88	1	–	–	–	–	13.3	6.9	14.1	7.7	13.9	7.5	16.4	10.0	19.0	12.6

Output shaft dimensions

C-face – flange mounted

Double and triple reduction

HF_2C_
HF_3C_
HF_2L_
HF_3L_

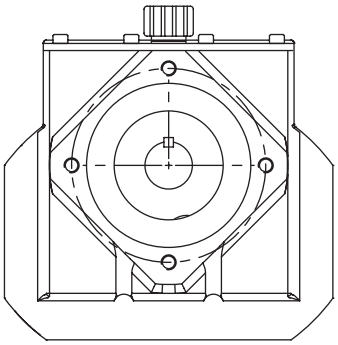

B14 Output flange

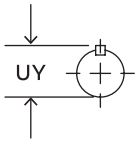

Metric output shaft

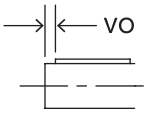

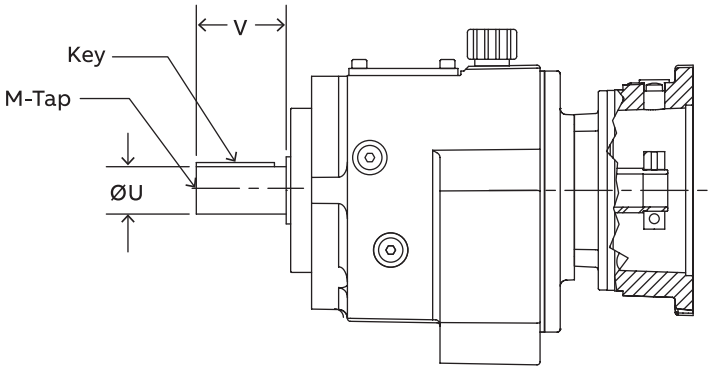

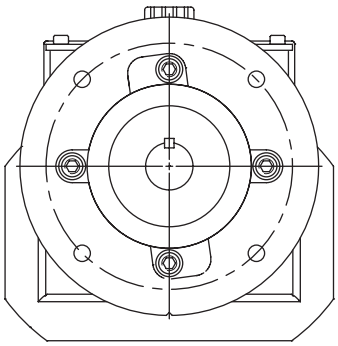

B5 Output flange

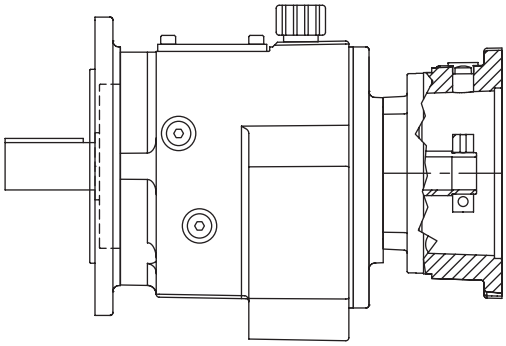

	Standard inch output shaft						Standard metric output shaft						
	Ø U	Tol.	UY	V	Key	M-Tap	Ø U	Tol.	UY	V	Vo	Key	M-Tap
38	1.000	+0.0000 -0.0005	1.11	1.97	1/4 x 1/4 x 1-5/8	3/8-16 UNC X 0.87	25	+0.015 -0.002	28	50	7	8 x 7 x 40	M10 x 22
48	1.250	+0.0000 -0.0005	1.36	2.36	1/4 x 1/4 x 2	3/8-16 UNC X 0.87	30	+0.015 -0.002	33	60	7	8 x 7 x 50	M10 x 22
58	1.250	+0.0000 -0.0005	1.36	2.36	1/4 x 1/4 x 2	3/8-16 UNC X 0.87	30	+0.015 -0.002	33	60	7	8 x 7 x 50	M10 x 22
68	1.625	+0.0000 -0.0010	1.79	3.15	3/8 x 3/8 x 2-5/8	5/8-11 UNC X 1.42	40	+0.018 -0.002	43	90	5	12 X 8 X 70	M16 x 36
88	2.125	+0.0000 -0.0010	2.35	3.94	1/2 x 1/2 x 3-1/4	3/4-10 UNC X 1.65	50	+0.018 -0.002	54	100	10	14 X 9 X 80	M16 x 36
108	2.375	+0.0000 -0.0010	2.65	4.72	5/8 x 5/8 x 3-15/16	3/4-10 UNC X 1.65	60	+0.030 +0.011	64	120	10	18 x 11 x 100	M20 x 42
128	2.875	+0.0000 -0.0010	3.20	5.51	3/4 x 3/4 x 4-1/2	3/4-10 UNC X 1.65	70	+0.030 +0.011	75	140	15	20 x 12 x 110	M20 x 42
148	3.625	+0.0000 -0.0010	4.01	6.69	7/8 x 7/8 x 5-5/8	1-8 UNC X 1.97	90	+0.035 +0.013	95	170	15	25 x 14 x 140	M24 x 50
168	4.000	+0.0000 -0.0010	4.44	8.27	1 x 1 x 7-1/8	1-8 UNC X 1.97	100	+0.035 +0.013	106	210	15	28 x 16 x 180	M24 x 50

Optional output shaft page ILH-227

Gearcase dimensions

C-face – flange mounted
Double and triple reduction

HF_2C_
HF_3C_
HF_2L_
HF_3L_

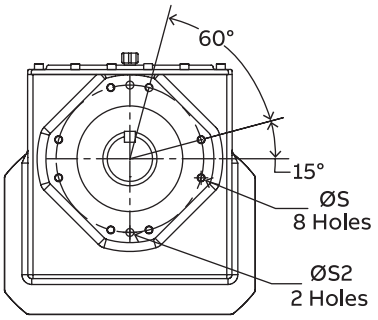

B14 Output flange
Sizes 108-168

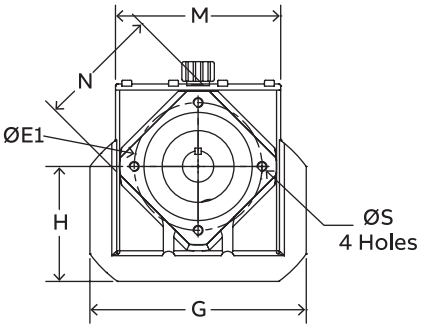

B14 Output flange
Sizes 38-88

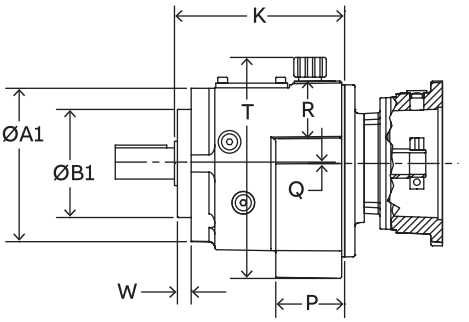

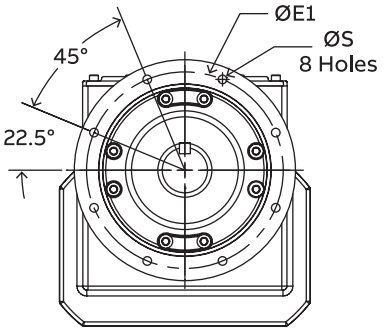

B5 Output flange
Sizes 128-168

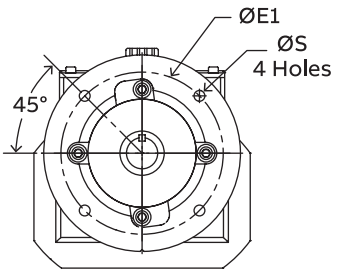

B5 Output flange
Sizes 38-108

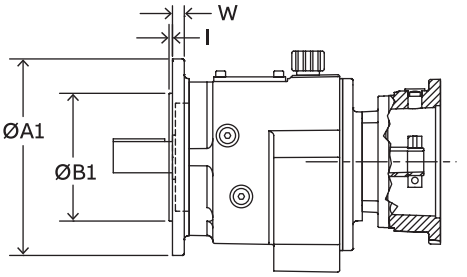

	Mounting dimensions						Outline dimensions								
	Ø A1	Ø B1	Ø E1	Ø S	Ø S2	W	H	G	K	P	M	N	R	T	Q
38	4.72	3.1497	3.94	M8 x 0.43	–	0.39	3.62	6.45	5.51	2.32	5.07	3.96	1.83	6.29	0
48	6.30	4.3308	5.12	M10 x 0.63	–	0.59	4.61	8.66	6.81	2.76	6.61	4.91	2.31	8.86	0
58	6.30	4.3308	5.12	M10 x 0.63	–	0.59	4.61	8.66	6.81	2.76	6.61	4.91	2.31	8.86	0
68	7.48	5.1182	6.50	M12 x 0.67	–	0.55	5.67	10.39	8.23	3.27	8.14	6.10	2.97	10.68	0
88	9.65	7.0867	8.47	M16 x 0.87	–	0.71	7.17	13.07	10.47	4.25	10.23	7.73	3.62	13.22	0
108	11.82	7.8741	9.84	M16 x 1.10	0.47	0.91	8.70	16.14	12.24	4.94	12.84	9.91	4.64	16.42	0
128	13.40	9.4489	11.81	M16 x 0.87	0.63	1.10	9.84	18.19	14.72	5.63	14.33	11.92	5.04	18.27	0
148	13.39	9.4489	11.81	M16 x 0.87	0.63	1.06	12.48	20.08	16.18	6.30	16.38	11.87	6.48	20.95	1.44
168	15.76	11.8110	13.78	M20 x 1.34	0.63	1.38	14.09	22.84	19.45	7.26	18.50	11.80	8.46	24.82	1.66

	Standard B5 flange dimensions						Optional B5 flange dimensions					
	Ø A1	Ø B1	Ø E1	Ø S	I	W	Ø A1	Ø B1	Ø E1	Ø S	I	W
38	6.30	4.3308	5.12	0.35	0.14	0.39	7.87	5.1182	6.50	0.43	0.14	0.47
48	7.87	5.1182	6.50	0.43	0.14	0.47	9.84	7.0867	8.47	0.53	0.16	0.59
58	7.87	5.1182	6.50	0.43	0.14	0.47	9.84	7.0867	8.47	0.53	0.16	0.59
68	9.84	7.0867	8.47	0.53	0.16	0.59	11.81	9.0552	10.43	0.53	0.16	0.63
88	11.81	9.0551	10.43	0.53	0.16	0.63	13.78	9.8419	11.81	0.69	0.20	0.71
108	13.77	9.8419	11.81	0.69	0.20	0.71	17.72	13.7788	15.75	0.69	0.20	0.79
128	13.77	9.8419	11.81	0.69	0.20	0.78	17.72	13.7788	15.75	0.69	0.20	0.87
148	17.72	13.7788	15.75	0.69	0.20	0.87	21.64	17.7157	19.69	0.69	0.20	0.98
168	17.72	13.7788	15.75	0.69	0.20	1.22	21.65	17.7157	19.69	0.69	0.20	1.22

Clamp collar NEMA/IEC dimensions

C-face – flange mounted

Double and triple reduction

HF_2CN_
HF_3CN_
HF_2CI_
HF_3CI_

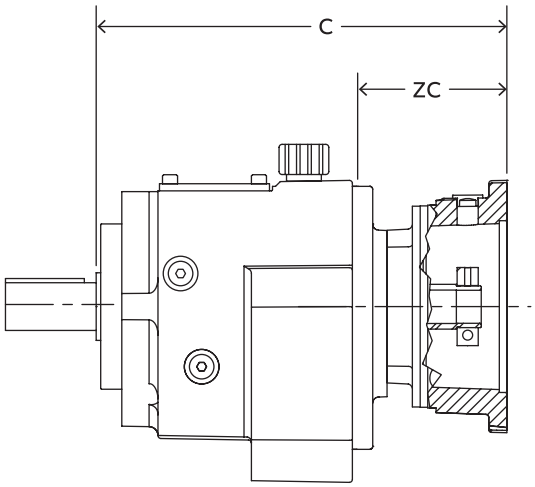

NEMA clamp collar motor dimensions

Reducer size	Reducer stage	56C		140TC		180TC		210TC		250TC		280TC		320TC		360TC	
		C	ZC	C	ZC	C	ZC	C	ZC	C	ZC	C	ZC	C	ZC	C	ZC
38	2	8.98	3.47	9.65	4.14	9.98	4.47	–	–	–	–	–	–	–	–	–	–
	3	9.57	4.06	10.24	4.73	–	–	–	–	–	–	–	–	–	–	–	–
48	2	10.06	3.25	10.73	3.92	12.30	5.49	12.18	5.33	–	–	–	–	–	–	–	–
	3	10.73	3.92	11.40	4.59	12.97	6.16	–	–	–	–	–	–	–	–	–	–
58	2	10.49	2.91	11.16	3.58	12.38	4.8	14.68	7.1	–	–	–	–	–	–	–	–
	3	11.24	3.66	11.91	4.33	13.15	5.57	–	–	–	–	–	–	–	–	–	–
68	2	11.24	3.01	11.91	3.68	13.41	5.18	15.33	7.10	14.43	6.13	–	–	–	–	–	–
	3	11.97	3.74	12.64	4.41	14.21	5.98	–	–	–	–	–	–	–	–	–	–
88	2	–	–	13.56	3.09	14.92	4.45	16.85	6.38	16.74	6.27	17.39	6.88	–	–	–	–
	3	–	–	14.55	4.08	16.06	5.59	17.95	7.48	–	–	–	–	–	–	–	–
108	2	–	–	–	–	–	–	18.14	5.90	18.12	5.88	18.86	6.62	20.29	8.01	–	–
	3	–	–	16.08	3.84	17.48	5.24	19.42	7.18	19.28	7.04	–	–	–	–	–	–
128	2	–	–	–	–	–	–	20.22	5.50	19.96	5.24	20.87	6.15	22.44	7.72	24.21	9.41
	3	–	–	18.35	3.63	19.64	4.92	21.55	6.83	21.41	6.69	22.33	7.61	–	–	–	–
148	2	–	–	–	–	–	–	21.36	5.18	21.12	4.94	22.04	5.86	23.63	7.45	25.36	9.18
	3	–	–	–	–	20.98	4.80	22.86	6.68	22.62	6.44	23.54	7.36	25.13	8.95	–	–
168	2	–	–	–	–	–	–	24.07	4.62	23.83	4.38	24.75	5.30	26.34	6.89	28.07	8.62
	3	–	–	–	–	–	–	25.69	6.24	25.45	6.00	26.36	6.91	27.95	8.50	29.68	10.23

IEC clamp collar motor dimensions

Reducer size	Reducer stage	71D		80D		90D		100D		112D		132D		160D		180D		200D		225D		250D	
		C	ZC	C	ZC	C	ZC	C	ZC	C	ZC	C	ZC	C	ZC	C	ZC	C	ZC	C	ZC	C	ZC
38	2	8.27	2.76	9.21	3.70	9.21	3.70	9.51	4.00	–	–	–	–	–	–	–	–	–	–	–	–	–	–
	3	8.86	3.35	9.80	4.29	9.80	4.29	–	–	–	–	–	–	–	–	–	–	–	–	–	–	–	–
48	2	9.35	2.54	10.30	3.49	10.30	3.49	10.59	3.78	10.93	4.12	–	–	–	–	–	–	–	–	–	–	–	–
	3	10.02	3.21	10.96	4.15	10.96	4.21	11.26	4.45	–	–	–	–	–	–	–	–	–	–	–	–	–	–
58	2	9.78	2.20	10.73	3.15	10.73	3.15	11.02	3.44	11.22	3.64	13.03	5.45	–	–	–	–	–	–	–	–	–	–
	3	10.53	2.95	11.48	3.9	11.48	3.9	11.77	4.19	–	–	–	–	–	–	–	–	–	–	–	–	–	–
68	2	10.53	2.30	11.48	3.25	11.48	3.25	11.77	3.54	12.03	3.80	13.64	5.41	–	–	–	–	–	–	–	–	–	–
	3	11.26	3.03	12.21	3.98	12.21	3.98	12.50	4.27	–	–	–	–	–	–	–	–	–	–	–	–	–	–
88	2	–	–	–	–	13.13	2.66	13.33	2.86	13.54	3.07	15.16	4.69	16.85	6.38	–	–	–	–	–	–	–	–
	3	13.17	2.70	14.11	3.64	14.11	3.64	14.41	3.94	14.69	4.22	16.26	5.79	–	–	–	–	–	–	–	–	–	–
108	2	–	–	–	–	–	–	–	–	14.86	2.62	16.44	4.20	18.17	5.93	18.70	6.46	19.09	6.85	–	–	–	–
	3	–	–	15.65	3.41	15.65	3.41	15.94	3.70	16.10	3.86	17.72	5.48	19.33	7.09	–	–	–	–	–	–	–	–
128	2	–	–	–	–	–	–	–	–	–	–	18.50	3.78	20.00	5.28	20.65	5.93	21.04	6.32	–	–	–	–
	3	–	–	–	–	17.85	3.13	18.15	3.43	18.27	3.55	19.84	5.12	21.46	6.74	22.11	7.39	22.50	7.78	–	–	–	–
148	2	–	–	–	–	–	–	–	–	–	–	19.65	3.47	21.16	4.98	21.81	5.63	22.20	6.02	–	–	–	–
	3	–	–	–	–	–	–	19.41	3.23	19.61	3.43	21.14	4.96	22.66	6.48	23.31	7.13	23.70	7.52	–	–	–	–
168	2	–	–	–	–	–	–	–	–	–	–	22.34	2.89	23.86	4.41	24.51	5.06	24.90	5.45	–	–	–	–
	3	–	–	–	–	–	–	–	–	–	–	23.96	4.51	25.47	6.02	26.12	6.67	26.52	7.07	–	–	–	–

Three-piece coupled NEMA/IEC dimensions

C-face – flange mounted

Double and triple reduction

HF_2LN_
HF_3LN_
HF_2LI_
HF_3LI_

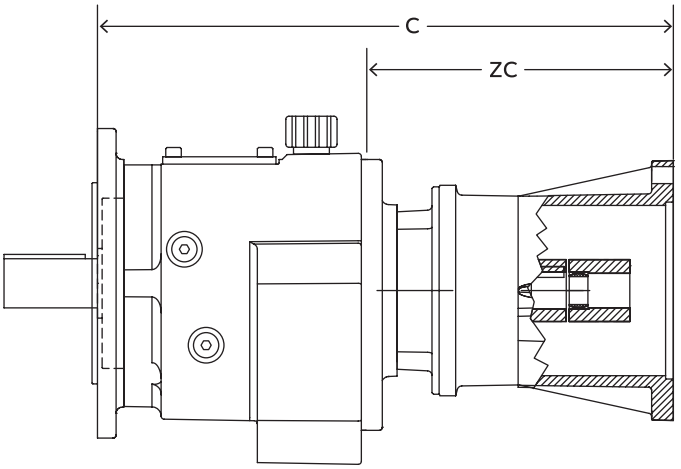

NEMA Three-piece coupled motor dimensions

Reducer size	Reducer stage	56C		140TC		180TC		210TC		250TC		280TC		320TC		360TC	
		C	ZC	C	ZC	C	ZC	C	ZC	C	ZC	C	ZC	C	ZC	C	ZC
38	2	12.11	6.60	13.52	8.01	–	–	–	–	–	–	–	–	–	–	–	–
	3	12.70	7.19	14.11	8.60	–	–	–	–	–	–	–	–	–	–	–	–
48	2	13.19	6.38	14.61	7.80	15.89	9.08	–	–	–	–	–	–	–	–	–	–
	3	13.86	7.05	15.28	8.46	16.56	9.75	–	–	–	–	–	–	–	–	–	–
58	2	14.08	6.50	15.04	7.46	16.18	8.60	18.52	10.94	–	–	–	–	–	–	–	–
	3	14.37	6.79	15.79	8.21	16.95	9.37	–	–	–	–	–	–	–	–	–	–
68	2	14.37	6.14	15.79	7.56	16.99	8.76	19.14	10.91	–	–	–	–	–	–	–	–
	3	15.10	6.87	16.52	8.29	17.80	9.57	–	–	–	–	–	–	–	–	–	–
88	2	–	–	17.44	6.97	18.50	8.03	20.65	10.18	22.60	12.13	–	–	–	–	–	–
	3	17.01	6.54	18.43	7.96	19.64	9.17	21.75	11.28	–	–	–	–	–	–	–	–
108	2	–	–	–	–	–	–	21.93	9.69	23.92	11.68	26.61	14.37	–	–	–	–
	3	–	–	19.96	7.72	21.06	8.82	23.21	10.97	25.08	12.84	–	–	–	–	–	–
128	2	–	–	–	–	–	–	24.00	9.28	25.75	11.03	28.56	13.84	31.06	16.34	–	–
	3	–	–	22.17	7.45	23.22	8.50	25.33	7.30	27.20	12.48	30.02	15.30	–	–	–	–
148	2	–	–	–	–	–	–	25.14	8.96	26.91	10.73	29.72	13.54	32.22	16.04	33.27	17.09
	3	–	–	–	–	24.57	8.39	26.63	10.45	28.41	12.23	31.22	15.04	33.72	17.54	–	–
168	2	–	–	–	–	–	–	27.84	8.39	29.61	10.16	32.42	12.97	34.92	15.47	35.97	16.52
	3	–	–	–	–	–	–	29.45	10.00	31.22	11.77	34.04	14.59	36.54	17.09	37.58	18.13

IEC Three-piece coupled motor dimensions

Reducer size	Reducer stage	71D		80D		90D		100D		112D		132D		160D		180D		200D		225D		250D	
		C	ZC	C	ZC	C	ZC	C	ZC	C	ZC	C	ZC	C	ZC	C	ZC	C	ZC	C	ZC	C	ZC
38	2	–	–	13.44	7.93	13.44	7.93	14.33	8.82	–	–	–	–	–	–	–	–	–	–	–	–	–	–
	3	–	–	14.04	8.53	14.04	8.53	–	–	–	–	–	–	–	–	–	–	–	–	–	–	–	–
48	2	–	–	14.53	7.72	14.53	7.72	15.41	8.60	15.37	8.56	–	–	–	–	–	–	–	–	–	–	–	–
	3	–	–	15.20	8.39	15.20	8.39	16.08	9.27	–	–	–	–	–	–	–	–	–	–	–	–	–	–
58	2	–	–	14.96	7.38	14.96	7.38	15.85	8.27	15.67	8.09	18.28	10.70	–	–	–	–	–	–	–	–	–	–
	3	–	–	15.71	8.13	15.71	8.13	16.60	9.02	–	–	–	–	–	–	–	–	–	–	–	–	–	–
68	2	–	–	15.71	7.48	15.71	7.48	16.60	8.37	16.48	8.25	18.90	10.67	–	–	–	–	–	–	–	–	–	–
	3	–	–	16.44	8.21	16.44	8.21	17.32	9.09	–	–	–	–	–	–	–	–	–	–	–	–	–	–
88	2	–	–	–	–	17.36	6.89	18.15	7.68	17.99	7.52	20.41	9.94	23.03	12.56	–	–	–	–	–	–	–	–
	3	–	–	18.35	7.88	18.35	7.88	19.23	8.76	19.13	8.66	21.52	11.05	–	–	–	–	–	–	–	–	–	–
108	2	–	–	–	–	–	–	–	–	19.31	7.07	21.69	9.45	24.35	12.11	26.34	14.10	26.38	14.14	–	–	–	–
	3	–	–	19.88	7.64	19.88	7.64	20.77	8.53	20.55	8.31	22.97	10.73	25.51	13.27	–	–	–	–	–	–	–	–
128	2	–	–	–	–	–	–	–	–	–	–	23.76	9.04	26.18	11.46	28.29	13.57	28.83	14.11	31.61	16.89	–	–
	3	–	–	–	–	22.09	7.37	22.97	8.25	22.72	8.00	25.10	10.38	27.64	12.92	29.74	15.05	29.78	15.06	–	–	–	–
148	2	–	–	–	–	–	–	–	–	–	–	24.90	8.72	27.34	11.16	29.45	13.27	29.49	13.31	32.78	16.60	32.95	16.77
	3	–	–	–	–	–	–	24.23	8.05	24.06	7.88	26.40	10.22	28.84	12.66	30.94	14.76	30.98	14.80	34.27	18.09	–	–
168	2	–	–	–	–	–	–	–	–	–	–	27.60	8.15	30.04	10.59	32.15	12.70	32.19	12.74	35.47	16.02	35.65	16.20
	3	–	–	–	–	–	–	–	–	–	–	29.21	9.76	31.65	12.20	33.76	14.31	33.80	14.35	37.09	17.64	37.26	17.81

Output shaft dimensions

C-face – flange mounted

Four- and five-stage reduction

HF_4C_
HF_5C_
HF_4L_
HF_5L_

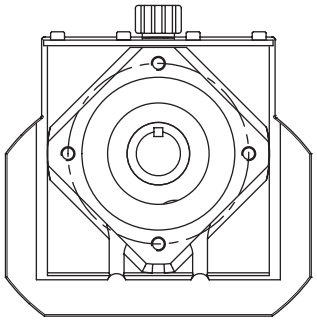

B14 Output flange

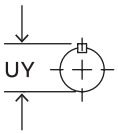

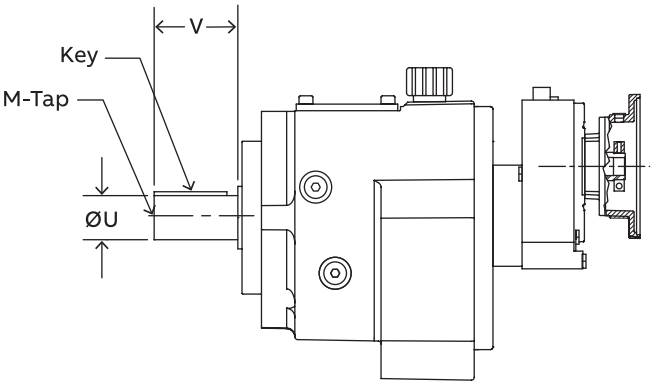

4 Stage reduction

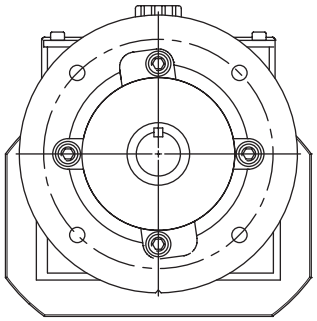

B5 Output flange

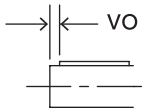

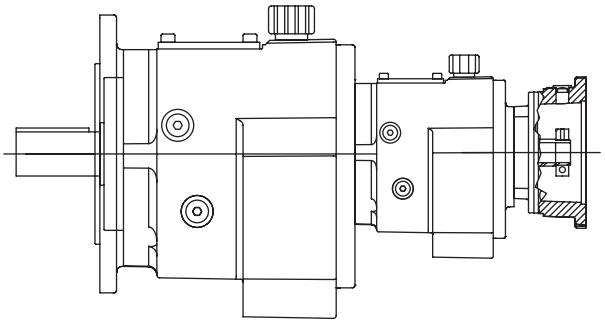

5 Stage reduction

	Standard inch output shaft						Standard metric output shaft						
	Ø U	Tol.	UY	V	Key	M-Tap	Ø U	Tol.	UY	V	Vo	Key	M-Tap
38	1.000	+0.0000 -0.0005	1.11	1.97	1/4 x 1/4 x 1-5/8	3/8-16 UNC X 0.87	25	+0.015 +0.002	28	50	7	8 x 7 x 40	M10 x 22
48	1.250	+0.0000 -0.0005	1.36	2.36	1/4 x 1/4 x 2	3/8-16 UNC X 0.87	30	+0.015 +0.002	33	60	7	8 x 7 x 50	M10 x 22
68	1.625	+0.0000 -0.0010	1.79	3.15	3/8 x 3/8 x 2-5/8	5/8-11 UNC X 1.42	40	+0.018 +0.002	43	90	5	12 X 8 X 70	M16 x 36
88	2.125	+0.0000 -0.0010	2.35	3.94	1/2 x 1/2 x 3-1/4	3/4-10 UNC X 1.65	50	+0.018 +0.002	54	100	10	14 X 9 X 80	M16 x 36
108	2.375	+0.0000 -0.0010	2.65	4.72	5/8 x 5/8 x 3-15/16	3/4-10 UNC X 1.65	60	+0.030 +0.011	64	120	10	18 x 11 x 100	M20 x 42
128	2.875	+0.0000 -0.0010	3.20	5.51	3/4 x 3/4 x 4-1/2	3/4-10 UNC X 1.65	70	+0.030 +0.011	75	140	15	20 x 12 x 110	M20 x 42
148	3.625	+0.0000 -0.0010	4.01	6.69	7/8 x 7/8 x 5-5/8	1-8 UNC X 1.97	90	+0.035 +0.013	95	170	15	25 x 14 x 140	M24 x 50
168	4.000	+0.0000 -0.0010	4.44	8.27	1 x 1 x 7-1/8	1-8 UNC X 1.97	100	+0.035 +0.013	106	210	15	28 x 16 x 180	M24 x 50

Optional output shaft page ILH-227

Gearcase dimensions

C-face – flange mounted

Four- and five-stage reduction

HF_4C_
HF_5C_
HF_4L_
HF_5L_

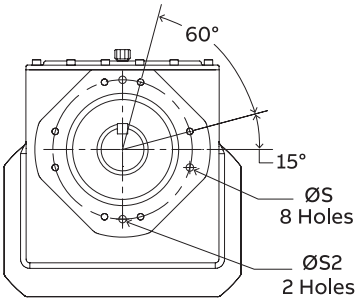

B14 Output flange
Sizes 108-168

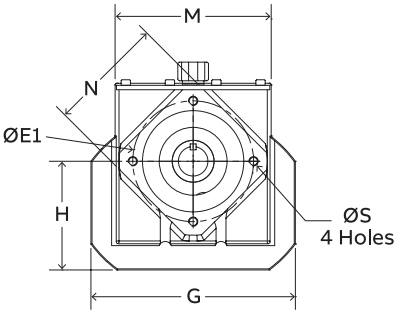

B14 Output flange
Sizes 38-88

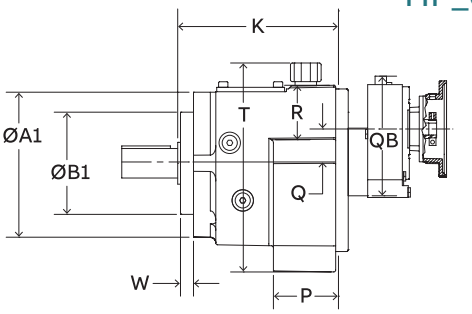

4 Stage reduction

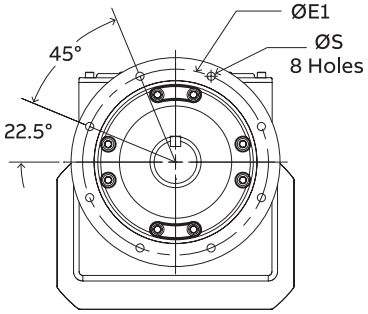

B5 Output flange
Sizes 128-168

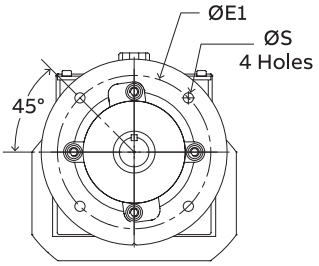

B5 Output flange
Sizes 38-108

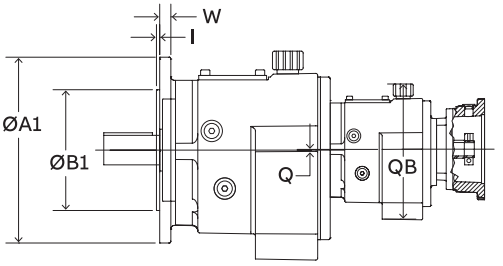

5 Stage reduction

	Mounting dimensions						Outline dimensions								
	Ø A1	Ø B1	Ø E1	Ø S	Ø S2	W	H	G	K	P	M	N	R	T	Q
38	4.72	3.1497	3.94	M8 x 0.43	–	0.39	3.62	6.45	5.51	2.32	5.07	3.96	1.83	6.29	0
48	6.30	4.3308	5.12	M10 x 0.63	–	0.59	4.61	8.66	6.81	2.76	6.61	4.91	2.31	8.86	0
68	7.48	5.1182	6.50	M12 x 0.67	–	0.55	5.67	10.39	8.23	3.27	8.14	6.10	2.97	10.68	0
88	9.65	7.0867	8.47	M16 x 0.87	–	0.71	7.17	13.07	10.47	4.25	10.23	7.73	3.62	13.22	0
108	11.82	7.8741	9.84	M16 x 1.10	0.47	0.91	8.70	16.14	12.24	4.94	12.84	9.91	4.64	16.42	0
128	13.40	9.4489	11.81	M16 x 0.87	0.63	1.10	9.84	18.19	14.72	5.63	14.33	11.92	5.04	18.27	0
148	13.39	9.4489	11.81	M16 x 0.87	0.63	1.06	12.48	20.08	16.18	6.30	16.38	11.87	6.48	20.95	1.44
168	15.76	11.8110	13.78	M20 x 1.34	0.63	1.38	14.09	22.84	19.45	7.26	18.50	11.80	8.46	24.82	1.66

	Standard B5 flange dimensions						Optional B5 flange dimensions						4 stage		5 stage	
	Ø A1	Ø B1	Ø E1	Ø S	I	W	Ø A1	Ø B1	Ø E1	Ø S	I	W	Q	QB	Q	QB
38	6.30	4.3308	5.12	0.35	0.14	0.39	7.87	5.1182	6.50	0.43	0.14	0.47	1.93	7.83	0	6.29
48	7.87	5.1182	6.50	0.43	0.14	0.47	9.84	7.0867	8.47	0.53	0.16	0.59	1.93	7.83	0	6.29
68	9.84	7.0867	8.47	0.53	0.16	0.59	11.81	9.0552	10.43	0.53	0.16	0.63	1.93	7.83	0	6.29
88	11.81	9.0551	10.43	0.53	0.16	0.63	13.78	9.8419	11.81	0.69	0.20	0.71	2.54	9.84	0	8.86
108	13.77	9.8419	11.81	0.69	0.20	0.71	17.72	13.7788	15.75	0.69	0.20	0.79	2.54	9.84	0	8.86
128	13.77	9.8419	11.81	0.69	0.20	0.78	17.72	13.7788	15.75	0.69	0.20	0.87	3.07	11.57	0	8.86
148	17.72	13.7788	15.75	0.69	0.20	0.87	21.64	17.7157	19.69	0.69	0.20	0.98	1.63	11.57	1.44	8.86
168	17.72	13.7788	15.75	0.69	0.20	1.22	21.65	17.7157	19.69	0.69	0.20	1.22	1.41	11.57	1.66	10.68

Clamp collar NEMA/IEC dimensions

C-face – flange mounted

Four- and five-stage reduction

HF_4CN_
HF_5CN_
HF_4CI_
HF_5CI_

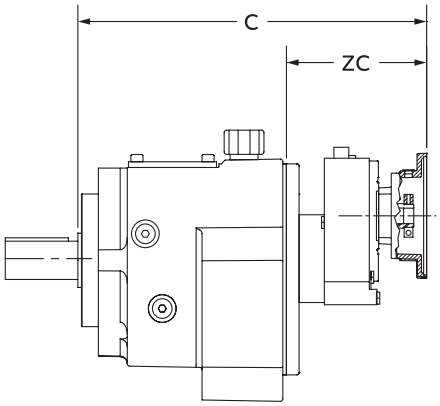

4 Stage reduction

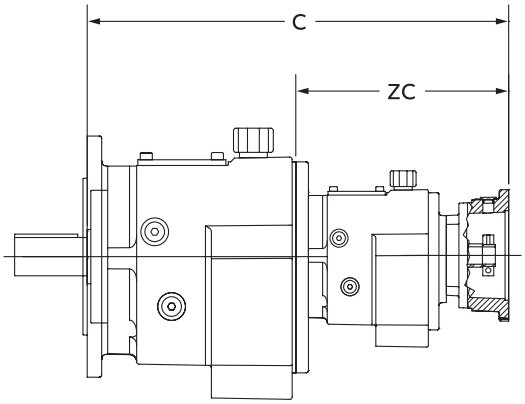

5 Stage reduction

NEMA clamp collar motor dimensions

Reducer size	Reduction stage	56C		140TC		180TC		210TC	
		C	ZC	C	ZC	C	ZC	C	ZC
38	4	13.96	8.45	14.66	9.15	14.96	9.45	–	–
	5	15.11	9.60	15.78	10.27	16.11	10.60	–	–
48	4	14.87	8.06	15.57	8.76	15.87	9.06	–	–
	5	16.02	9.21	16.69	9.88	17.02	10.21	–	–
68	4	16.23	8.00	16.93	8.70	17.23	9.00	–	–
	5	17.38	9.15	18.05	9.82	18.38	10.15	–	–
88	4	18.29	7.82	18.89	8.42	20.49	10.02	–	–
	5	20.63	10.16	21.30	10.83	22.87	12.40	–	–
108	4	20.38	8.14	20.98	8.74	22.58	10.34	–	–
	5	22.25	10.01	22.92	10.68	24.49	12.25	–	–
128	4	23.28	8.56	23.98	9.26	25.48	10.76	27.38	12.66
	5	24.52	9.80	25.19	10.47	26.76	12.04	–	–
148	4	24.59	8.41	25.29	9.11	26.79	10.61	28.69	12.51
	5	25.82	9.64	26.49	10.31	28.06	11.88	–	–
168	4	28.47	9.02	29.17	9.72	30.67	11.22	32.57	13.12
	5	30.84	11.39	31.51	12.06	33.01	13.56	34.93	15.48

IEC clamp collar motor dimensions

Reducer size	Reduction stage	71D		80D		90D		100D		112D		132D	
		C	ZC	C	ZC	C	ZC	C	ZC	C	ZC	C	ZC
38	4	13.26	7.75	14.16	8.65	14.16	8.65	14.46	8.95	–	–	–	–
	5	14.40	8.89	15.34	9.83	15.34	9.83	15.64	10.13	–	–	–	–
48	4	14.17	7.36	15.07	8.26	15.07	8.26	15.37	8.56	–	–	–	–
	5	15.31	8.50	16.25	9.44	16.25	9.44	16.55	9.74	–	–	–	–
68	4	15.53	7.30	16.43	8.20	16.43	8.20	16.73	8.50	–	–	–	–
	5	16.67	8.44	17.61	9.38	17.61	9.38	17.91	9.68	–	–	–	–
88	4	17.59	7.12	18.49	8.02	18.49	8.02	18.79	8.32	19.09	8.62	–	–
	5	19.92	9.45	20.87	10.40	20.87	10.40	21.16	10.69	21.50	11.03	–	–
108	4	19.68	7.44	20.58	8.34	20.58	8.34	20.88	8.64	21.18	8.94	–	–
	5	21.54	9.30	22.49	10.25	22.49	10.25	22.78	10.54	23.12	10.88	–	–
128	4	22.58	7.86	23.58	8.86	23.58	8.86	23.88	9.16	24.08	9.36	25.68	10.96
	5	23.81	9.09	24.76	10.04	24.76	10.04	25.05	10.33	25.39	10.67	–	–
148	4	23.89	7.71	24.89	8.71	24.89	8.71	25.19	9.01	25.39	9.21	26.99	10.81
	5	25.11	8.93	26.06	9.88	26.06	9.88	26.35	10.17	26.69	10.51	–	–
168	4	27.77	8.32	28.77	9.32	28.77	9.32	29.07	9.62	29.27	9.82	30.87	11.42
	5	30.13	10.68	31.08	11.63	31.08	11.63	31.37	11.92	31.63	12.18	33.24	13.79

Three-piece coupled NEMA/IEC dimensions

C-face – flange mounted

Four- and five-stage reduction

HF_4LN_
HF_5LN_
HF_4LI_
HF_5LI_

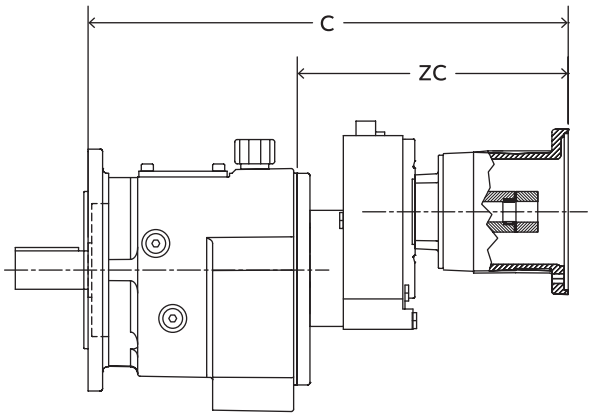

4 Stage reduction

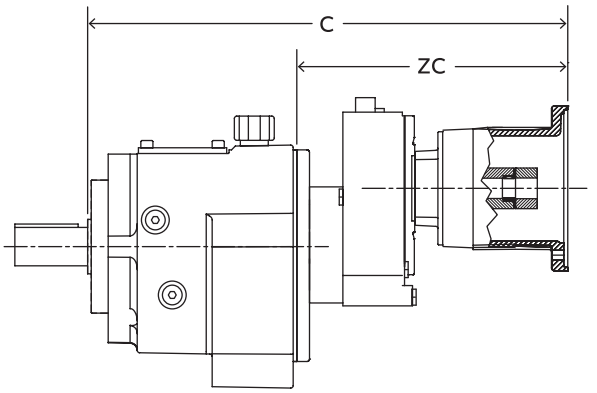

5 Stage reduction

NEMA Three-piece coupled motor dimensions

Reducer size	Reduction stage	56C		140TC		180TC		210TC	
		C	ZC	C	ZC	C	ZC	C	ZC
38	4	17.06	11.55	18.46	12.95	–	–	–	–
	5	18.24	12.73	19.65	14.14	–	–	–	–
48	4	17.97	11.16	19.37	12.56	–	–	–	–
	5	19.15	12.34	20.56	13.75	–	–	–	–
68	4	19.33	11.10	20.73	12.50	–	–	–	–
	5	20.51	12.28	21.92	13.69	–	–	–	–
88	4	21.39	10.92	22.79	12.32	24.09	13.62	–	–
	5	23.76	13.29	25.18	14.71	26.46	15.99	–	–
108	4	23.48	11.24	24.88	12.64	26.18	13.94	–	–
	5	25.38	13.14	26.80	14.56	28.08	15.84	–	–
128	4	26.48	11.76	27.88	13.16	29.08	14.36	30.98	16.26
	5	27.65	12.93	29.07	14.35	30.35	15.63	–	–
148	4	27.79	11.61	29.19	13.01	30.39	14.21	32.29	16.11
	5	28.95	12.77	30.37	14.19	31.65	15.47	–	–
168	4	31.67	12.22	33.07	13.62	34.27	14.82	36.17	16.72
	5	33.97	14.52	35.39	15.94	36.59	17.14	38.74	19.29

IEC Three-piece coupled motor dimensions

Reducer size	Reduction stage	71D		80D		90D		100D		112D		132D	
		C	ZC	C	ZC	C	ZC	C	ZC	C	ZC	C	ZC
38	4	–	–	18.46	12.95	18.46	12.95	19.26	13.75	–	–	–	–
	5	–	–	19.57	14.06	19.57	14.06	20.46	14.95	–	–	–	–
48	4	–	–	19.37	12.56	19.37	12.56	20.17	13.36	–	–	–	–
	5	–	–	20.48	13.67	20.48	13.67	21.37	14.56	–	–	–	–
68	4	–	–	20.73	12.50	20.73	12.50	21.53	13.30	–	–	–	–
	5	–	–	21.84	13.61	21.84	13.61	22.73	14.50	–	–	–	–
88	4	–	–	22.69	12.22	22.69	12.22	23.59	13.12	23.59	13.12	–	–
	5	–	–	25.10	14.63	25.10	14.63	25.98	15.51	25.94	15.47	–	–
108	4	–	–	24.78	12.54	24.78	12.54	25.68	13.44	25.68	13.44	–	–
	5	–	–	26.72	14.48	26.72	14.48	27.60	15.36	27.56	15.32	–	–
128	4	–	–	–	–	27.78	13.06	28.68	13.96	28.58	13.86	30.98	16.26
	5	–	–	28.99	14.27	28.99	14.27	29.87	15.15	29.83	15.11	–	–
148	4	–	–	–	–	29.09	12.91	29.99	13.81	29.89	13.71	32.29	16.11
	5	–	–	30.29	14.11	30.29	14.11	31.17	14.99	31.13	14.95	–	–
168	4	–	–	–	–	32.97	13.52	33.87	14.42	33.77	14.32	36.17	16.72
	5	–	–	35.31	15.86	35.31	15.86	36.20	16.75	36.08	16.63	38.50	19.05

Output shaft dimensions

HB_1S_

Separate – foot mounted
Single reduction

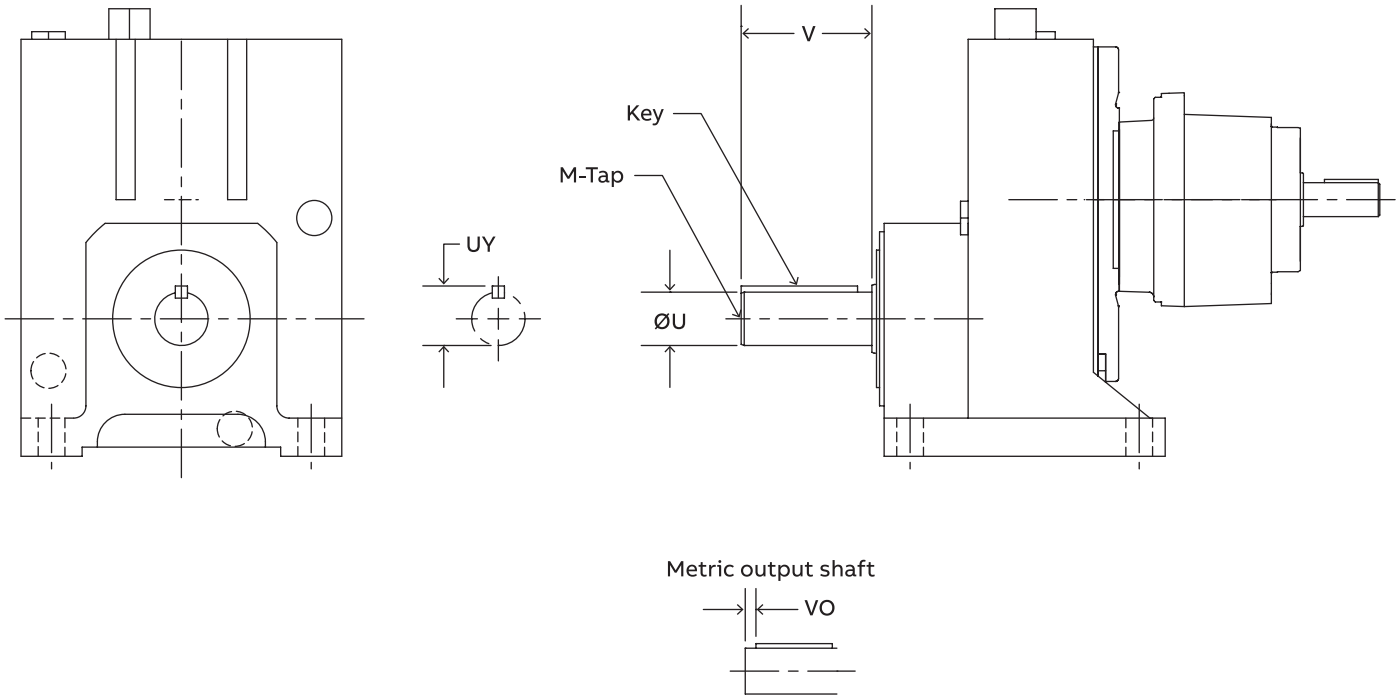

	Standard inch output shaft						Standard metric output shaft						
	Ø U	Tol.	UY	V	Key	M-Tap	Ø U	Tol.	UY	V	Vo	Key	M-Tap
38	0.875	+0.000 -0.001	0.95	2.24	3/16 x 3/16 x 1.50	5/16-18 UNC	20	+0.015 +0.002	22.5	40	5	6 x 6 x 30	M6 x 16
48	1.125	+0.000 -0.001	1.23	2.74	1/4 x 1/4 x 2.35	3/8-16 UNC	25	+0.015 +0.002	28	50	7	8 x 7 x 40	M10 x 22
68	1.375	+0.000 -0.001	1.51	3.37	5/16 x 5/16 x 3.00	3/8-16 UNC	30	+0.015 +0.002	33	60	7	8 x 7 x 50	M10 x 36
88	1.625	+0.000 -0.001	1.79	3.15	3/8 x 3/8 x 2.75	5/8-11 UNC	40	+0.018 +0.002	43	80	5	12 X 8 X 70	M16 X 36

Gearcase dimensions

Separate – foot mounted
Single reduction

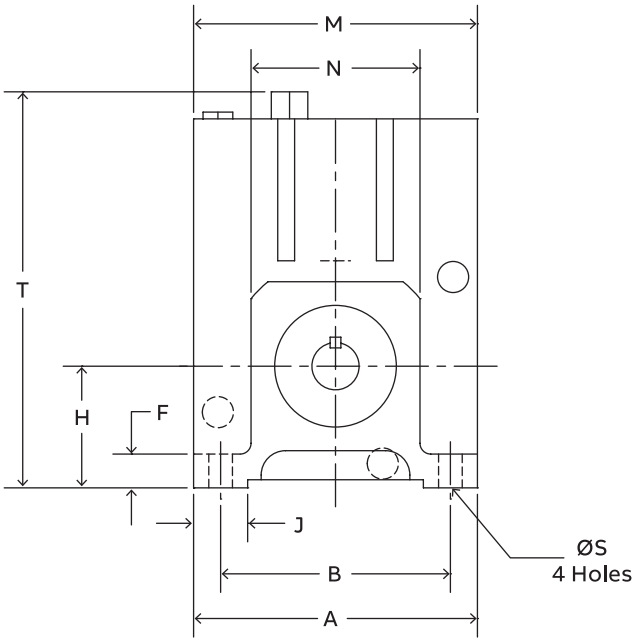

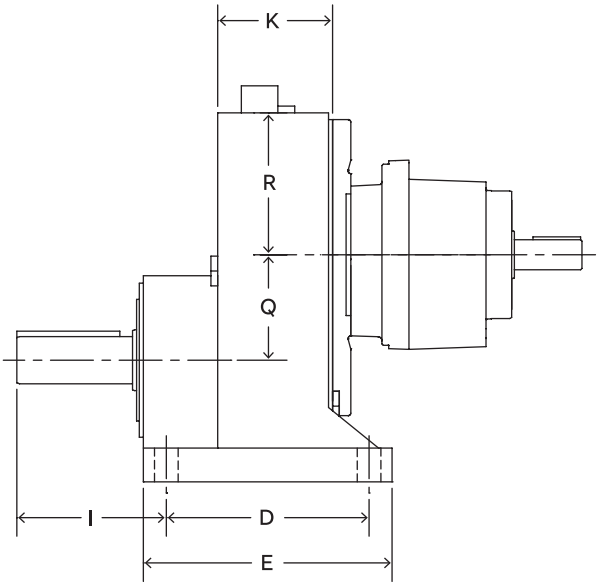

	Mounting dimensions										Outline dimensions				
	A	B	D	E	F	H	J	Ø S	I	K	M	N	R	T	Q
38	6.1	4.92	4.33	5.4	0.7	2.2	1.4	0.43	2.9	2.34	5.1	3.6	2.6	6.7	1.93
48	6.7	5.31	4.72	6.0	0.8	3.2	1.5	0.53	3.8	2.60	6.7	3.8	3.4	9.9	2.54
68	8.3	6.69	5.91	7.3	1.0	3.6	1.6	0.69	4.4	3.35	8.3	5.0	4.2	11.6	3.07
88	8.46	10.3	6.30	8.1	1.2	4.0	2.4	0.69	4.4	3.86	10.3	6.3	5.2	13.8	3.9

Separate input shaft dimensions

HB_1S_

Separate – foot mounted
Single reduction

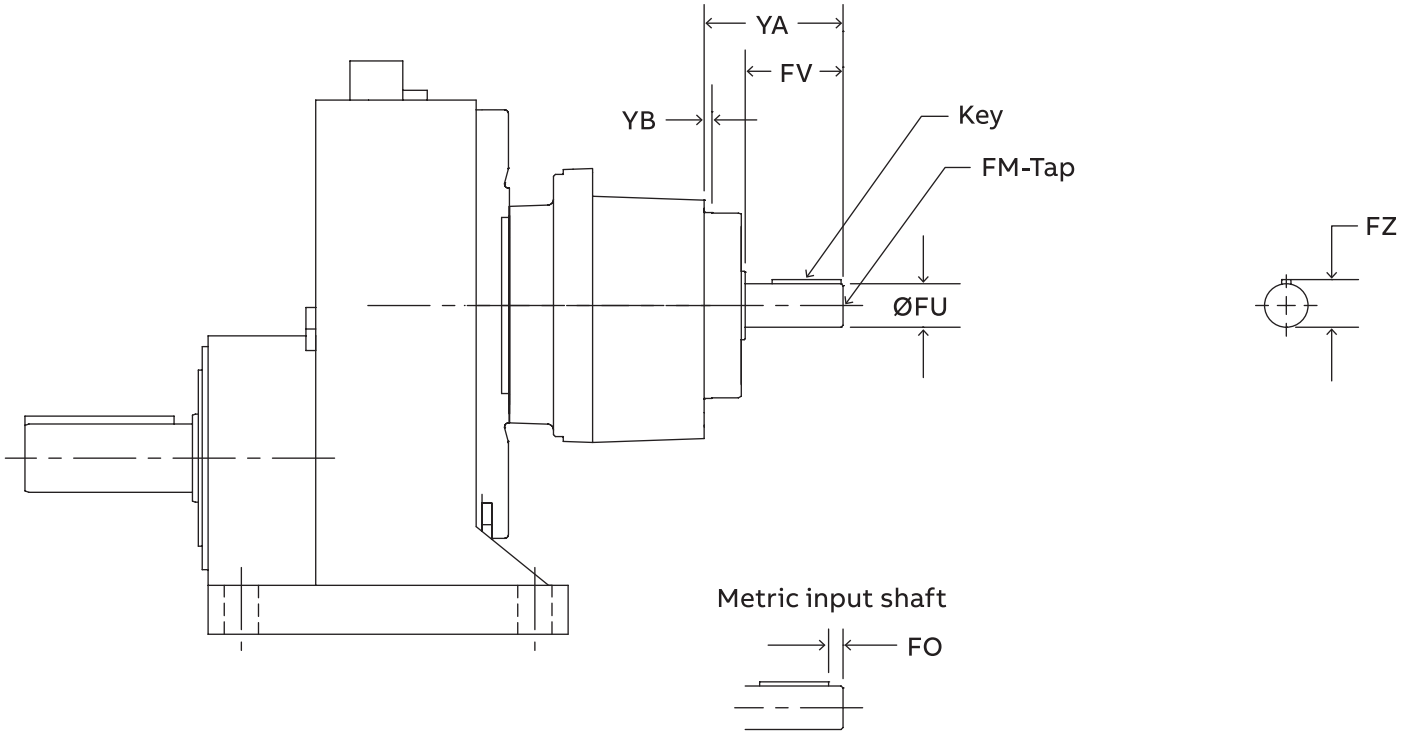

Separate input mounting dimensions

	Ø FU	Tol	FO	FV	YA	YB	FM x Depth	Key
71	0.625	+0.0000 -0.0005	–	1.57	2.40	0.16	8-32 UNC x 0.49	3/16 x 3/16 x 1-5/16
	16	+0.012 +0.001	4	40			M5 x 12.5	5 x 5 x 32
80	0.750	+0.0000 -0.0005	–	1.57	2.40	0.16	1/4-20 UNC x 0.63	3/16 x 3/16 x1-5/16
	19	+0.015 +0.002	4	10			M6 x 16	6 x 6 x 32
90	0.875	+0.0000 -0.0005	–	1.97	2.80	0.16	5/16-18 UNC x 0.75	3/16 x 3/16 x 1-5/8
	24	+0.015 +0.002	5	50			M8 x 19	8 x 7 x 40
100	1.125	+0.0000 -0.0005	–	2.36	3.27	0.16	3/8-16 UNC x 0.87	1/4 x 1/4 x 2
	28	+0.015 +0.002	5	60			M10 x 22	8 x 7 x 50
112	1.250	+0.0000 -0.0005	–	2.36	3.27	0.16	3/8-16 UNC x 0.87	1/4 x 1/4 x 2
	28	+0.015 +0.002	5	60			M10 x 22	8 x 7 x 50
132	1.375	+0.0000 -0.0005	–	3.15	6.61	0.14	3/8-16 UNC x 1.10	5/16 x 5/16 x 2-3/4
	38	+0.018 +0.002	5	80			M12 x 28	10 x 8 x 70
160	1.625	+0.0000 -0.0010	–	4.33	8.46	0.14	5/8-11 UNC x 1.42	3/8 x 3/8 x 3-1/2
	42	+0.018 +0.002	10	110			M16 x 36	12 x 8 x 90

Separate input shaft dimensions

Separate – foot mounted

Single reduction

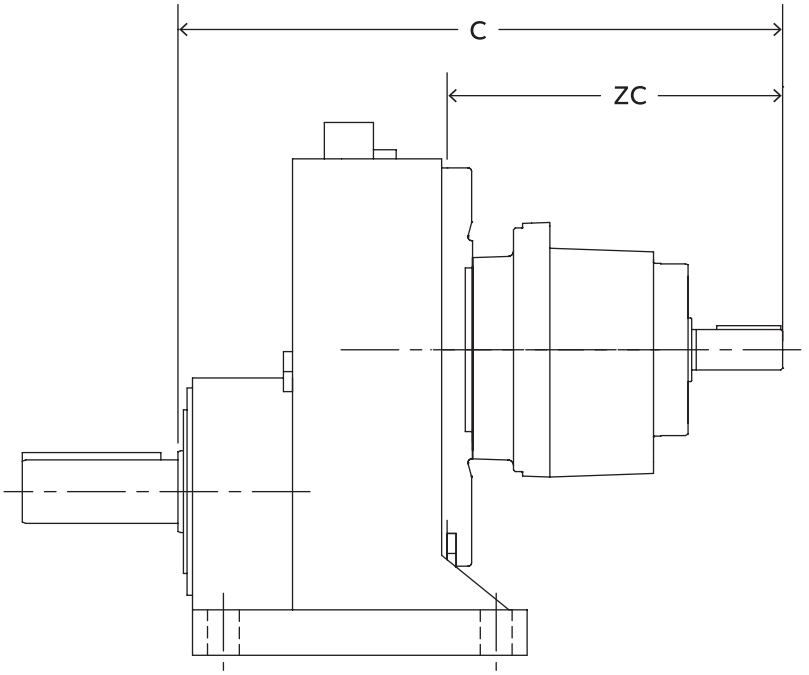

Inch separate input dimensions

Reducer size	Reducer stage	71		80		90		100		112		132		160	
		C	ZC	C	ZC	C	ZC	C	ZC	C	ZC	C	ZC	C	ZC
38	1	10.3	6.0	11.7	7.3	12.1	7.7	12.7	8.4	–	–	–	–	–	–
48	1	10.1	5.8	11.5	7.1	11.9	7.5	12.5	8.2	12.5	8.2	–	–	–	–
68	1	11.4	5.5	12.7	6.9	13.1	7.3	13.8	7.9	13.8	7.9	17.1	11.2	–	–
88	1	–	–	–	–	13.1	6.7	13.6	7.2	13.5	7.1	16.9	10.5	18.6	12.2

Metric separate input dimensions (dimensions in mm)

Reducer size	Reducer stage	71		80		90		100		112		132		160	
		C	ZC	C	ZC	C	ZC	C	ZC	C	ZC	C	ZC	C	ZC
38	1	261	151	296	186	306	196	322	212	–	–	–	–	–	–
48	1	256	146	291	181	301	191	317	207	318	208	–	–	–	–
68	1	288	140	323	175	333	185	349	201	348	200	432	284	–	–
88	1	–	–	–	–	332	170	345	183	343	181	428	266	471	309

Output shaft dimensions

Separate – foot mounted

Double and triple reduction

HB_2S_
HB_3S_

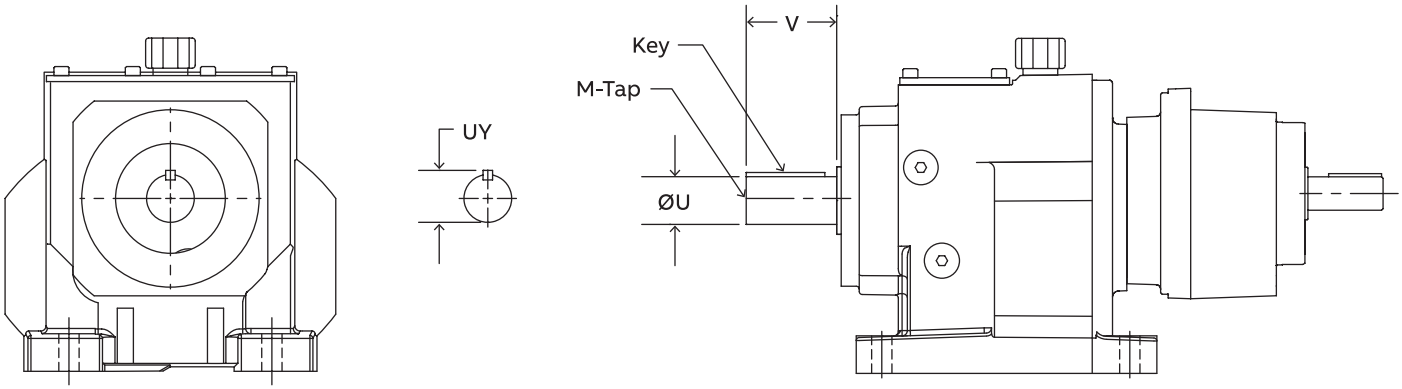

Metric output shaft

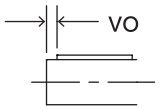

	Standard inch output shaft						Standard metric output shaft						
	Ø U	Tol.	UY	V	Key	M-Tap	Ø U	Tol.	UY	V	Vo	Key	M-Tap
38	1.000	+0.0000 -0.0005	1.11	1.97	1/4 x 1/4 x 1-5/8	3/8-16 UNC X 0.87	25	+0.015 +0.002	28	50	7	8 x 7 x 40	M10 x 22
48	1.250	+0.0000 -0.0005	1.36	2.36	1/4 x 1/4 x 2	3/8-16 UNC X 0.87	30	+0.015 +0.002	33	60	7	8 x 7 x 40	M10 x 22
58	1.375	+0.0000 -0.0005	1.49	2.76	5/16 x 5/16 x 2-1/8	1/2-13 UNC x 1.12	35	+0.014 +0.002	38	70	7	10 x 8 x 56	M12 x 28
68	1.625	+0.0000 -0.0010	1.79	3.15	3/8 x 3/8 x 2-5/8	5/8-11 UNC X 1.42	40	+0.018 +0.002	43	90	5	12 X 8 X 70	M16 x 36
88	2.125	+0.0000 -0.0010	2.35	3.94	1/2 x 1/2 x 3-1/4	3/4-10 UNC X 1.65	50	+0.018 +0.002	54	100	10	14 X 9 X 80	M16 x 36
108	2.375	+0.0000 -0.0010	2.65	4.72	5/8 x 5/8 x 3-15/16	3/4-10 UNC X 1.65	60	+0.030 +0.011	64	120	10	18 x 11 x 100	M20 x 42
128	2.875	+0.0000 -0.0010	3.20	5.51	3/4 x 3/4 x 4-1/2	3/4-10 UNC X 1.65	70	+0.030 +0.011	75	140	15	20 x 12 x 110	M20 x 42
148	3.625	+0.0000 -0.0010	4.01	6.69	7/8 x 7/8 x 5-5/8	1-8 UNC X 1.97	90	+0.035 +0.013	95	170	15	25 x 14 x 140	M24 x 50
168	4.000	+0.0000 -0.0010	4.44	8.27	1 x 1 x 7-1/8	1-8 UNC X 1.97	100	+0.035 +0.013	106	210	15	28 x 16 x 180	M24 x 50

Optional output shaft page ILH-227

Gearcase dimensions

Separate – foot mounted
Double and triple reduction

HB_2S_
HB_3S_

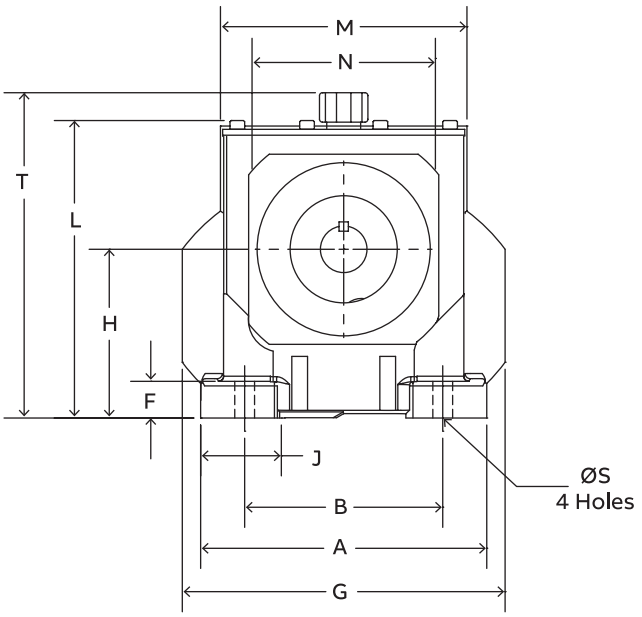

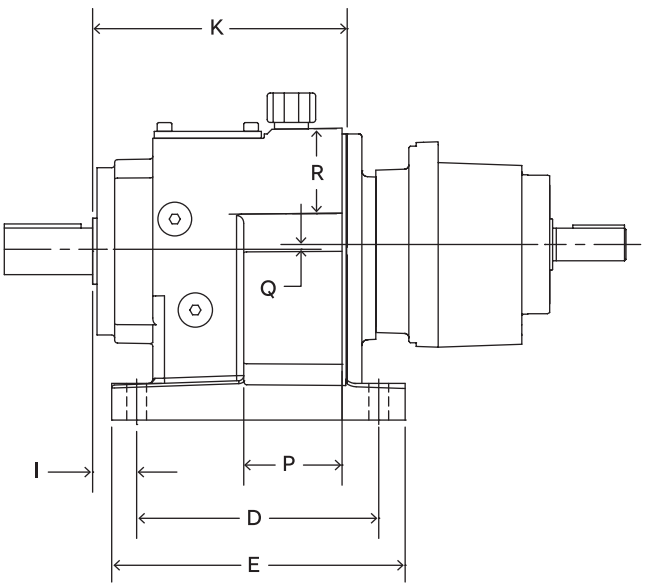

	Mounting dimensions										Outline dimensions							
	A	B	D	E	F	G	H	J	Ø S	I	K	P	L	M	N	R	T	Q
38	5.77	4.33	5.12	6.30	0.79	6.42	3.54	1.33	0.39	0.98	5.51	2.33	6.21	5.07	3.77	1.83	–	0
48	7.68	5.32	6.50	7.87	0.98	8.66	4.53	2.17	0.53	1.18	6.81	2.76	7.98	6.61	4.92	2.28	8.73	0
58	8.27	5.91	7.68	9.25	1.12	9.80	5.12	2.36	0.55	1.09	7.58	3.02	9.00	7.48	5.58	2.47	9.77	0
68	9.25	6.69	8.07	9.65	1.18	10.35	5.51	2.36	0.69	1.38	8.23	3.27	9.65	8.41	6.32	3.03	10.58	0
88	11.42	8.47	10.24	12.21	1.77	13.07	7.09	2.95	0.69	1.58	10.47	4.26	12.21	10.24	7.87	3.70	13.17	0
108	13.39	9.84	12.21	14.37	1.97	16.14	8.86	3.58	0.87	1.56	12.24	4.94	15.32	12.05	9.85	4.24	16.20	0
128	15.75	11.42	14.57	17.32	2.17	18.19	9.84	4.33	1.02	1.77	14.72	5.63	17.13	14.33	11.82	4.89	18.08	0
148	17.72	13.39	16.14	19.29	2.36	20.07	12.40	4.34	1.30	1.97	16.18	6.30	19.71	16.38	11.82	6.24	20.55	1.44
168	20.87	14.96	19.69	23.23	2.56	22.84	13.98	5.71	1.54	1.97	19.45	7.26	23.07	18.11	15.75	7.62	23.92	1.66

Output shaft dimensions

Separate – foot mounted

Double and triple reduction

HB_2S_
HB_3S_

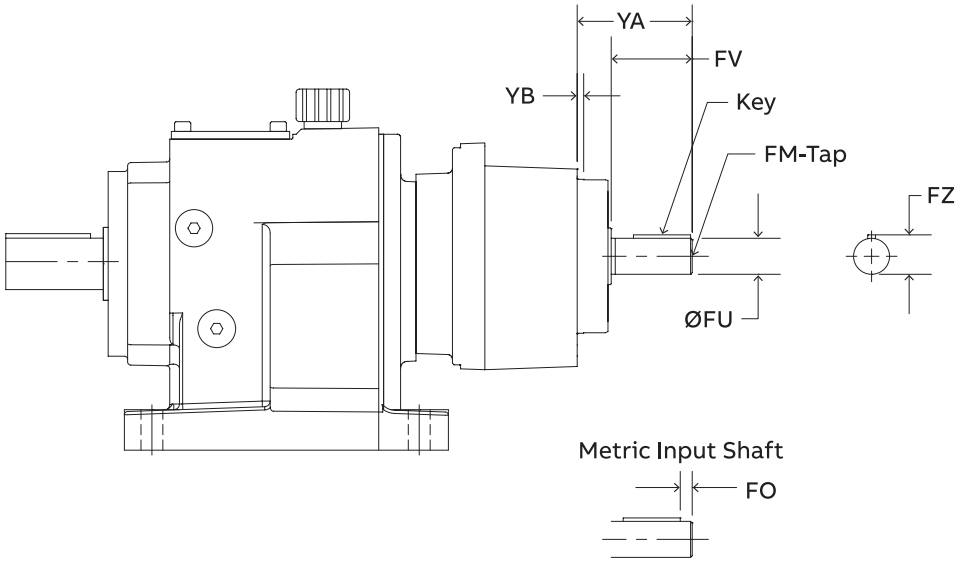

Separate input mounting dimensions

	Ø FU	Tol	FO	FV	YA	YB	FM x Depth	Key
71	0.625	+0.0000 -0.0005	–	1.57	2.40	0.16	8-32 UNC x 0.49	3/16 x 3/16 x 1-5/16
	16	+0.012 +0.001	4	40			M5 x 12.5	5 x 5 x 32
80	0.750	+0.0000 -0.0005	–	1.57	2.40	0.16	1/4-20 UNC x 0.63	3/16 x 3/16 x1-5/16
	19	+0.015 +0.002	4	10			M6 x 16	6 x 6 x 32
90	0.875	+0.0000 -0.0005	–	1.97	2.80	0.16	5/16-18 UNC x 0.75	3/16 x 3/16 x 1-5/8
	24	+0.015 +0.002	5	50			M8 x 19	8 x 7 x 40
100	1.125	+0.0000 -0.0005	–	2.36	3.27	0.16	3/8-16 UNC x 0.87	1/4 x 1/4 x 2
	28	+0.015 +0.002	5	60			M10 x 22	8 x 7 x 50
112	1.250	+0.0000 -0.0005	–	2.36	3.27	0.16	3/8-16 UNC x 0.87	1/4 x 1/4 x 2
	28	+0.015 +0.002	5	60			M10 x 22	8 x 7 x 50
132	1.375	+0.0000 -0.0005	–	3.15	6.61	0.14	3/8-16 UNC x 1.10	5/16 x 5/16 x 2-3/4
	38	+0.018 +0.002	5	80			M12 x 28	10 x 8 x 70
160	1.625	+0.0000 -0.0010	–	4.33	8.46	0.14	5/8-11 UNC x 1.42	3/8 x 3/8 x 3-1/2
	42	+0.018 +0.002	10	110			M16 x 36	12 x 8 x 90
180	2.125	+0.0000 -0.0010	–	4.33	9.25	0.20	3/4-10 UNC x 1.65	1/2 x 1/2 x 3-5/8
	55	+0.030 +0.011	10	110			M20 x 42	16 x 10 x 90
225	2.125	+0.0000 -0.0010	–	4.33	9.05	0.20	3/4-10 UNC x 1.65	1/2 x 1/2 x 3-5/8
	60	+0.030 +0.011	15	140			M20 x 42	18 x 11 x 110
250	2.375	+0.0000 -0.0010	–	5.51	10.20	0.20	3/4-10 UNC x 1.65	5/8 x 5/8 x 4-3/8
	65	+0.030 +0.011	15	140			M20 x 42	18 x 11 x 110

Separate input shaft dimensions

HB_2S_
HB_3S_

Separate – foot mounted

Double and triple reduction

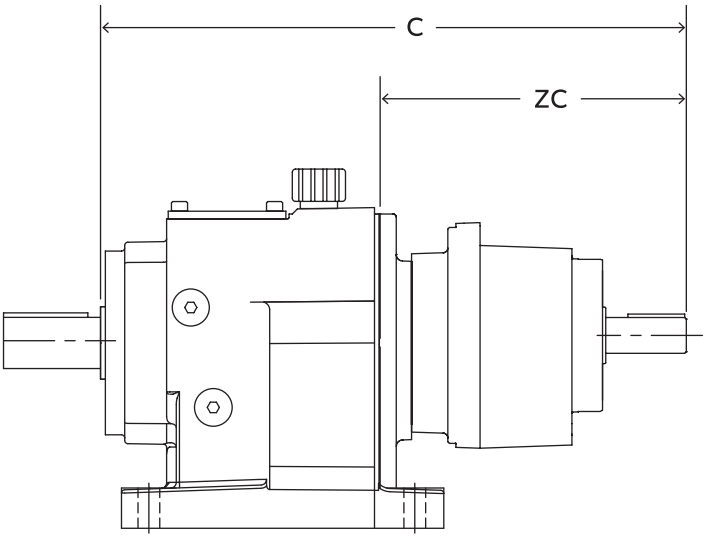

Inch separate input dimensions

Reducer size	Reducer stage	71		80		90		100		112		132		160		180		225		250	
		C	ZC	C	ZC	C	ZC	C	ZC	C	ZC	C	ZC	C	ZC	C	ZC	C	ZC	C	ZC
38	2	11.46	5.95	12.83	7.32	13.23	7.72	13.86	8.35	–	–	–	–	–	–	–	–	–	–	–	–
	3	12.05	6.54	13.43	7.92	13.82	8.31	–	–	–	–	–	–	–	–	–	–	–	–	–	–
48	2	12.56	5.75	13.94	7.13	14.33	7.52	14.96	8.15	15.00	8.19	–	–	–	–	–	–	–	–	–	–
	3	13.23	6.42	14.61	7.80	15.00	8.19	15.63	8.82	–	–	–	–	–	–	–	–	–	–	–	–
58	2	12.97	5.39	14.35	6.77	14.75	7.17	15.37	7.79	15.28	7.70	18.79	11.21	–	–	–	–	–	–	–	–
	3	13.75	6.14	15.10	7.52	15.5	7.92	16.12	8.54	–	–	–	–	–	–	–	–	–	–	–	–
68	2	13.74	5.51	15.12	6.89	15.51	7.28	16.14	7.91	16.10	7.87	19.41	11.18	–	–	–	–	–	–	–	–
	3	14.45	6.22	15.83	7.60	16.22	7.99	16.85	8.62	–	–	–	–	–	–	–	–	–	–	–	–
88	2	–	–	–	–	17.17	6.70	17.68	7.21	17.60	7.13	20.94	10.47	22.64	12.17	–	–	–	–	–	–
	3	16.38	5.91	17.76	7.29	18.15	7.68	18.78	8.31	18.74	8.27	22.05	11.58	–	–	–	–	–	–	–	–
108	2	–	–	–	–	–	–	–	–	18.94	6.70	22.20	9.96	23.98	11.74	24.76	12.52	–	–	–	–
	3	–	–	19.29	7.05	19.69	7.45	20.31	8.07	20.16	7.92	23.50	11.26	25.12	12.88	–	–	–	–	–	–
128	2	–	–	–	–	–	–	–	–	–	–	24.29	9.58	25.79	11.07	26.73	12.01	27.8	13.08	–	–
	3	–	–	–	–	21.89	7.17	22.52	7.80	22.32	7.60	25.63	10.91	27.24	12.52	28.19	13.47	–	–	–	–
148	2	–	–	–	–	–	–	–	–	–	–	25.43	9.25	26.97	10.79	27.87	11.69	28.98	12.8	30.12	13.94
	3	–	–	–	–	–	–	23.78	7.60	23.66	7.48	26.93	10.75	28.46	12.28	29.37	13.19	30.47	14.29	–	–
168	2	–	–	–	–	–	–	–	–	–	–	28.11	8.66	29.65	10.20	30.59	11.14	31.65	12.2	32.84	13.39
	3	–	–	–	–	–	–	–	–	–	–	29.73	10.28	31.26	11.81	32.21	12.76	33.27	13.82	34.45	15.00

Metric separate input dimensions (dimensions in mm)

Reducer size	Reducer stage	71		80		90		100		112		132		160		180		225		250	
		C	ZC	C	ZC	C	ZC	C	ZC	C	ZC	C	ZC	C	ZC	C	ZC	C	ZC	C	ZC
38	2	291	151	326	186	336	196	352	212	–	–	–	–	–	–	–	–	–	–	–	–
	3	306	166	341	201	351	211	–	–	–	–	–	–	–	–	–	–	–	–	–	–
48	2	319	146	354	181	364	191	380	207	381	208	–	–	–	–	–	–	–	–	–	–
	3	336	163	371	198	381	208	397	224	–	–	–	–	–	–	–	–	–	–	–	–
58	2	329	137	364	172	375	182	390	198	388	196	477	285	–	–	–	–	–	–	–	–
	3	348	156	384	191	394	201	409	198	–	–	–	–	–	–	–	–	–	–	–	–
68	2	349	140	384	175	394	185	410	201	409	200	493	284	–	–	–	–	–	–	–	–
	3	367	158	402	193	412	203	428	219	–	–	–	–	–	–	–	–	–	–	–	–
88	2	–	–	–	–	436	170	449	183	447	181	532	266	575	309	–	–	–	–	–	–
	3	416	150	451	185	461	195	477	211	476	210	560	294	–	–	–	–	–	–	–	–
108	2	–	–	–	–	–	–	–	–	481	170	564	253	609	298	629	318	–	–	–	–
	3	–	–	490	179	500	189	516	205	512	201	597	286	638	327	–	–	–	–	–	–
128	2	–	–	–	–	–	–	–	–	–	–	617	243	655	281	679	305	736	362	–	–
	3	–	–	–	–	556	182	572	198	567	193	651	277	692	318	716	342	–	–	–	–
148	2	–	–	–	–	–	–	–	–	–	–	646	235	685	274	708	297	766	355	765	354
	3	–	–	–	–	–	–	604	193	601	190	684	273	723	312	746	335	804	393	–	–
168	2	–	–	–	–	–	–	–	–	–	–	714	220	753	259	777	283	834	340	834	340
	3	–	–	–	–	–	–	–	–	–	–	755	261	794	300	818	324	875	381	875	381

Output shaft dimensions

Separate – foot mounted

Four- and five-stage reduction

HB_4S_
HB_5S_

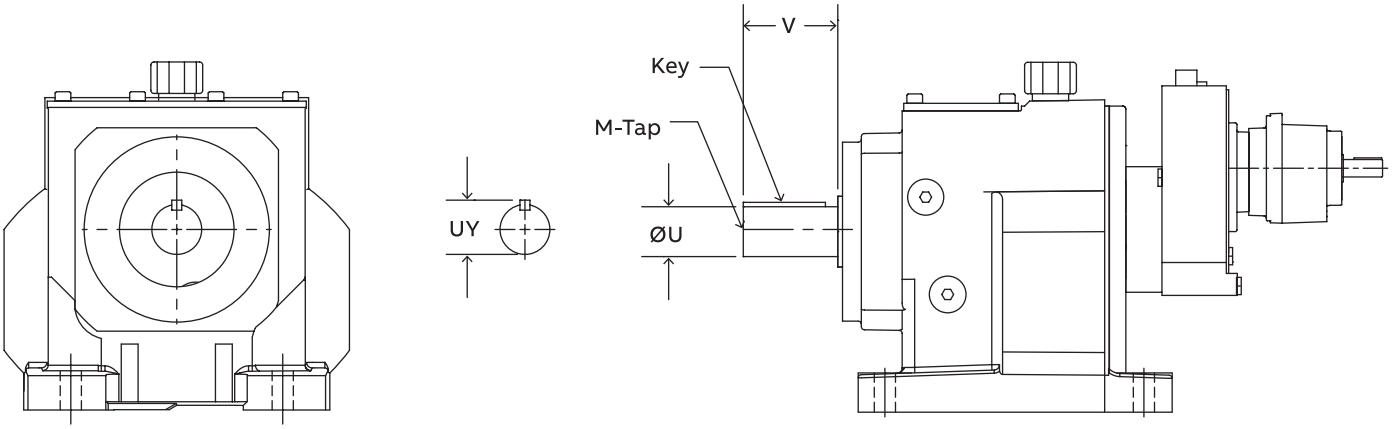

4 Stage reduction

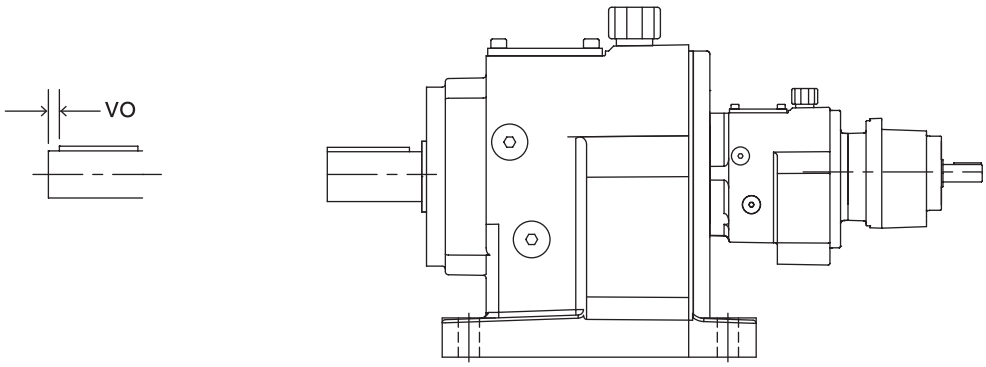

5 Stage reduction

	Standard inch output shaft						Standard metric output shaft						
	Ø U	Tol.	UY	V	Key	M-Tap	Ø U	Tol.	UY	V	Vo	Key	M-Tap
38	1.000	+0.0000 -0.0005	1.11	1.97	1/4 x 1/4 x 1-5/8	3/8-16 UNC x 0.87	25	+0.015 +0.002	28	50	7	8 x 7 x 40	M10 x 22
48	1.250	+0.0000 -0.0005	1.36	2.36	1/4 x 1/4 x 2	3/8-16 UNC x 0.87	30	+0.015 +0.002	33	60	7	8 x 7 x 50	M10 x 22
68	1.625	+0.0000 -0.0010	1.79	3.15	3/8 x 3/8 x 2-5/8	5/8-11 UNC x 1.42	40	+0.018 +0.002	43	90	5	12 x 8 x 70	M10 x 36
88	2.125	+0.0000 -0.0010	2.35	3.94	1/2 x 1/2 x 3-1/4	3/4-10 x UNC x 1.65	50	+0.018 +0.002	54	100	10	14 x 9 x 80	M16 X 36
108	2.375	+0.0000 -0.0010	2.65	4.72	5/8 x 5/8 x 3-15/16	3/4-10 x UNC x 1.65	60	+0.030 +0.011	64	120	10	18 x 11 x 100	M20 x 42
128	2.875	+0.0000 -0.0010	3.20	5.51	3/4 x 3/4 x 4-1/2	3/4-10 x UNC x 1.65	70	+0.030 +0.011	75	140	15	20 x 12 x 110	M20 x 42
148	3.625	+0.0000 -0.0010	4.01	6.69	7/8 x 7/8 x 5-5/8	1-8 UNC x 1.97	90	+0.035 +0.013	95	170	15	25 x 14 x 140	M24 x 50
168	4.000	+0.0000 -0.0010	4.44	8.27	1 x 1 x 7-1/8	1-8 UNC x 1.97	100	+0.035 +0.013	106	210	15	28 x 16 x 180	M24 x 50

Optional output shaft page ILH-227

Gearcase dimensions

Separate – foot mounted

Four- and five-stage reduction

HB_4S_
HB_5S_

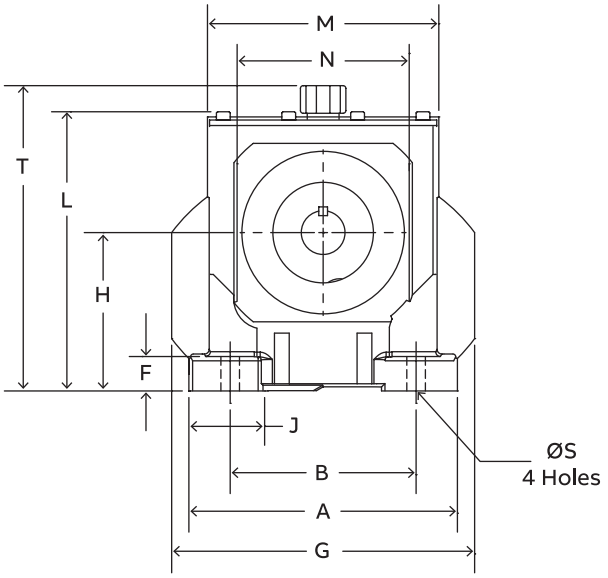

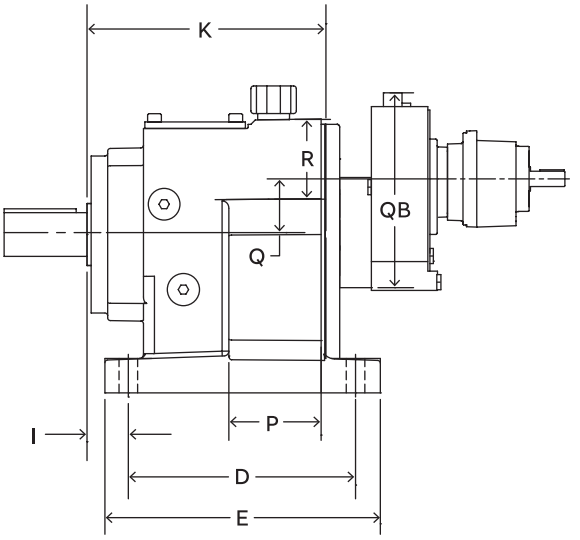

4 Stage reduction

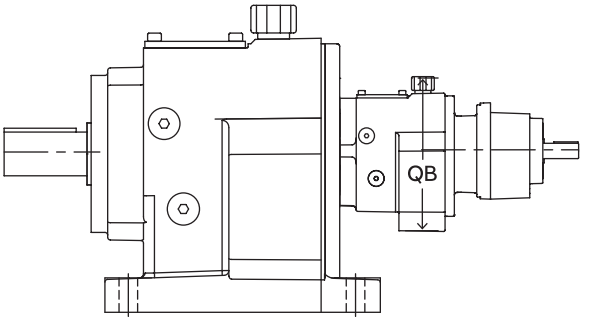

5 Stage reduction

	Mounting dimensions										Outline dimensions							4 stage		5 stage	
	A	B	D	E	F	G	H	J	ØS	I	K	P	L	M	N	R	T	Q	QB	Q	QB
38	5.77	4.33	5.12	6.30	0.79	6.42	3.54	1.33	0.39	0.98	5.51	2.33	6.21	5.07	3.77	1.83	–	1.93	7.83	0	6.29
48	7.68	5.32	6.50	7.87	0.98	8.66	4.53	2.17	0.53	1.18	6.81	2.76	7.98	6.61	4.92	2.28	8.73	1.93	7.83	0	6.29
68	9.25	6.69	8.07	9.65	1.18	10.35	5.51	2.36	0.69	1.38	8.23	3.27	9.65	8.41	6.32	3.03	10.58	1.93	7.83	0	6.29
88	11.42	8.47	10.24	12.21	1.77	13.07	7.09	2.95	0.69	1.58	10.47	4.26	12.21	10.24	7.87	3.70	13.17	2.54	9.84	0	8.86
108	13.39	9.84	12.21	14.37	1.97	16.14	8.86	3.58	0.87	1.56	12.24	4.94	15.32	12.05	9.85	4.24	16.20	2.54	9.84	0	8.86
128	15.75	11.42	14.57	17.32	2.17	18.19	9.84	4.33	1.02	1.77	14.72	5.63	17.13	14.33	11.82	4.89	18.08	3.07	11.57	0	8.86
148	17.72	13.39	16.14	19.29	2.36	20.07	12.40	4.34	1.30	1.97	16.18	6.30	19.71	16.38	11.82	6.24	20.55	1.63	11.57	1.44	8.86
168	20.87	14.96	19.69	23.23	2.56	22.84	13.98	5.71	1.54	1.97	19.45	7.26	23.07	18.11	15.75	7.62	23.92	1.41	11.57	1.66	10.68

Separate input shaft dimensions

Separate – foot mounted

Four- and five-stage reduction

HB_4S_
HB_5S_

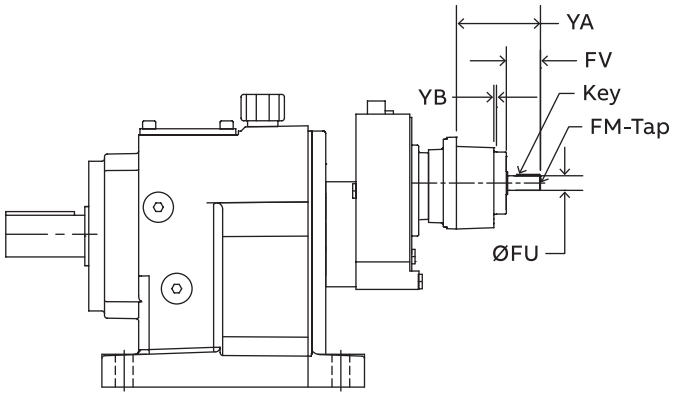

4 Stage reduction

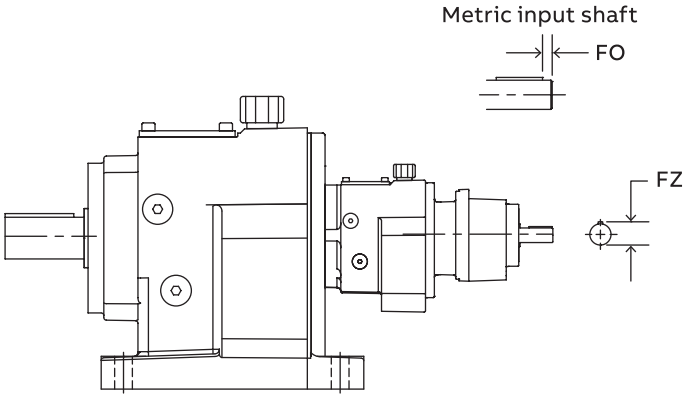

5 Stage reduction

Separate input mounting dimensions

	Ø FU	Tol	FO	FV	YA	YB	FM x Depth	Key
71	0.625	+0.0000 -0.0005	–	1.57	2.40	0.16	8-32 UNC x 0.49	3/16 x 3/16 x 1-5/16
	16	+0.012 +0.001	4	40			M5 x 12.5	5 x 5 x 32
80	0.750	+0.0000 -0.0005	–	1.57	2.40	0.16	1/4-20 UNC x 0.63	3/16 x 3/16 x1-5/16
	19	+0.015 +0.002	4	10			M6 x 16	6 x 6 x 32
90	0.875	+0.0000 -0.0005	–	1.97	2.80	0.16	5/16-18 UNC x 0.75	3/16 x 3/16 x 1-5/8
	24	+0.015 +0.002	5	50			M8 x 19	8 x 7 x 40
100	1.125	+0.0000 -0.0005	–	2.36	3.27	0.16	3/8-16 UNC x 0.87	1/4 x 1/4 x 2
	28	+0.015 +0.002	5	60			M10 x 22	8 x 7 x 50
112	1.250	+0.0000 -0.0005	–	2.36	3.27	0.16	3/8-16 UNC x 0.87	1/4 x 1/4 x 2
	28	+0.015 +0.002	5	60			M10 x 22	8 x 7 x 50
132	1.375	+0.0000 -0.0005	–	3.15	6.61	0.14	3/8-16 UNC x 1.10	5/16 x 5/16 x 2-3/4
	38	+0.018 +0.002	5	80			M12 x 28	10 x 8 x 70

Separate input shaft dimensions

Separate – foot mounted

Four- and five-stage reduction

HB_4S_
HB_5S_

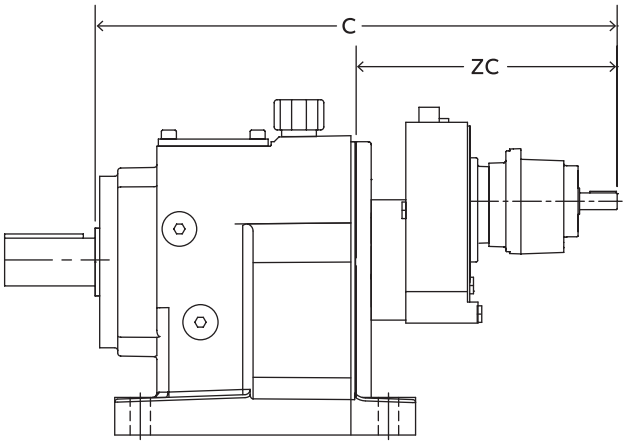

4 Stage reduction

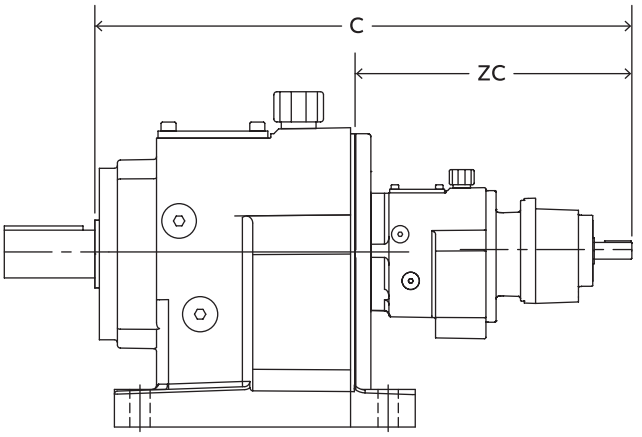

5 Stage reduction

Inch separate input dimensions

Reducer size	Reducer stage	71		80		90		100		112		132	
		C	ZC	C	ZC	C	ZC	C	ZC	C	ZC	C	ZC
38	4	16.46	10.95	17.76	12.25	18.16	12.65	18.86	13.35	–	–	–	–
	5	17.59	12.08	18.96	13.45	19.36	13.85	19.99	14.48	–	–	–	–
48	4	17.37	10.56	18.67	11.86	19.07	12.26	19.77	12.96	–	–	–	–
	5	18.50	11.69	19.87	13.06	20.27	13.46	20.90	14.09	–	–	–	–
68	4	18.73	10.50	20.03	11.80	20.43	12.20	21.13	12.90	–	–	–	–
	5	19.86	11.63	21.23	13.00	21.63	13.40	22.26	14.03	–	–	–	–
88	4	20.79	10.32	22.09	11.62	22.49	12.02	23.19	12.72	23.19	12.72	–	–
	5	23.13	12.66	24.51	14.04	24.90	14.43	25.53	15.06	25.57	15.10	–	–
108	4	22.88	10.64	24.18	11.94	24.58	12.34	25.28	13.04	25.28	13.04	–	–
	5	24.75	12.51	26.13	13.89	26.52	14.28	27.15	14.91	27.19	14.95	–	–
128	4	25.78	11.06	27.18	12.46	27.58	12.86	28.18	13.46	28.18	13.46	31.48	16.76
	5	27.02	12.30	28.40	13.68	28.79	14.07	29.42	14.70	29.46	14.74	–	–
148	4	27.09	10.91	28.49	12.31	28.89	12.71	29.49	13.31	29.49	13.31	32.79	16.61
	5	28.32	12.14	29.70	13.52	30.09	13.91	30.72	14.54	30.76	14.58	–	–
168	4	30.97	11.52	32.37	12.92	32.77	13.32	33.37	13.92	33.37	13.92	36.67	17.22
	5	33.34	13.89	34.72	15.27	35.11	15.66	35.74	16.29	35.70	16.25	39.01	19.56

Metric separate input dimensions (dimensions in mm)

Reducer size	Reducer stage	71		80		90		100		112		132	
		C	ZC	C	ZC	C	ZC	C	ZC	C	ZC	C	ZC
38	4	418	278	451	311	461	321	479	339	–	–	–	–
	5	447	307	482	342	492	352	508	368	–	–	–	–
48	4	441	268	474	301	484	311	502	329	–	–	–	–
	5	470	297	505	332	515	342	531	358	–	–	–	–
68	4	476	267	509	300	519	310	537	328	–	–	–	–
	5	504	295	539	330	549	340	565	356	–	–	–	–
88	4	528	262	561	295	571	305	589	323	589	323	–	–
	5	588	322	623	357	632	367	648	383	650	384	–	–
108	4	581	270	614	303	624	313	642	331	642	331	–	–
	5	629	318	664	353	674	363	690	379	691	380	–	–
128	4	655	281	690	317	701	327	716	342	716	342	800	426
	5	686	312	721	347	731	357	747	373	748	374	–	–
148	4	688	277	724	313	734	323	749	338	749	338	833	422
	5	719	308	754	343	764	353	780	369	781	370	–	–
168	4	787	293	822	328	832	338	848	353	848	353	931	437
	5	847	353	882	388	892	398	908	414	907	413	991	497

Output shaft dimensions

HF_1S_

Separate – flange mounted
Single reduction

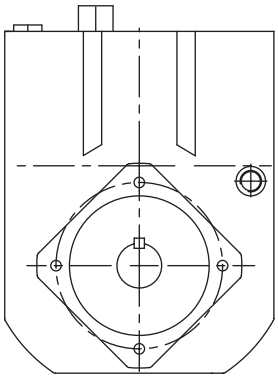

B14 Output flange

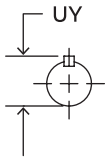

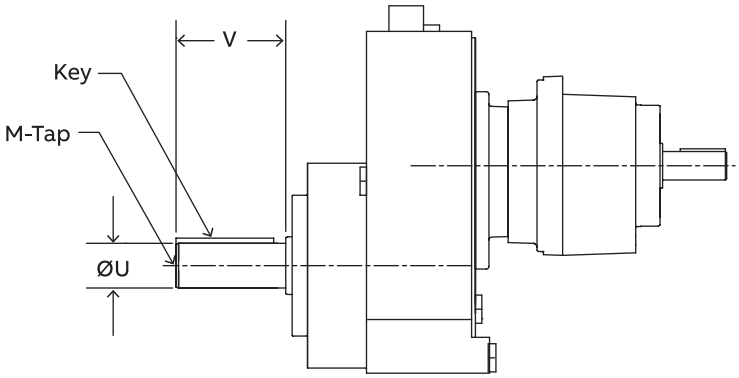

Metric output shaft

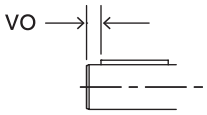

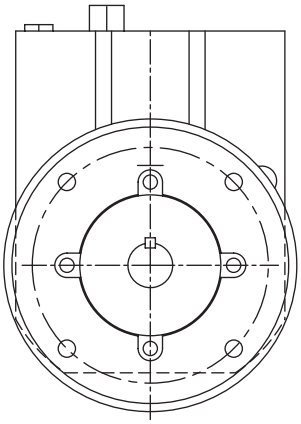

B5/NEMA Output flange

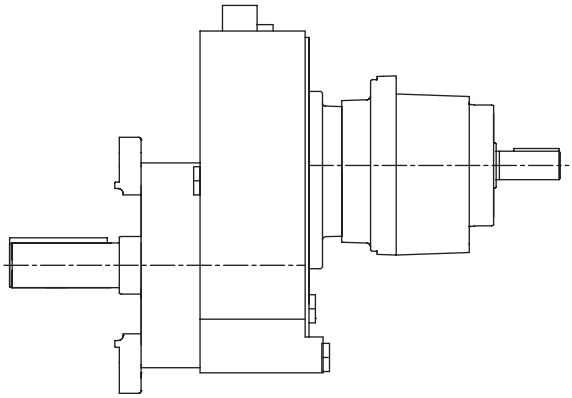

	Standard inch output shaft						Standard metric output shaft						
	Ø U	Tol.	UY	V	Key	M-Tap	Ø U	Tol.	UY	V	Vo	Key	M-Tap
38	0.875	+0.000 -0.001	0.95	2.24	3/16 x 3/16 x 1.50	5/16-18 UNC	20	+0.015 +0.002	22.5	40	5	6 x 6 x 30	M6 x 16
48	1.125	+0.000 -0.001	1.23	2.74	1/4 x 1/4 x 2.35	3/8-16 UNC	25	+0.015 +0.002	28	50	7	8 x 7 x 40	M10 x 22
68	1.375	+0.000 -0.001	1.51	3.37	5/16 x 5/16 x 3.00	3/8-16 UNC	30	+0.015 +0.002	33	60	7	8 x 7 x 50	M10 x 36
88	1.625	+0.000 -0.001	1.79	3.15	3/8 x 3/8 x 2.75	5/8-11 UNC	40	+0.018 +0.002	43	80	5	12 X 8 X 70	M16 x 36

Gearcase dimensions

Separate – flange mounted
Single reduction

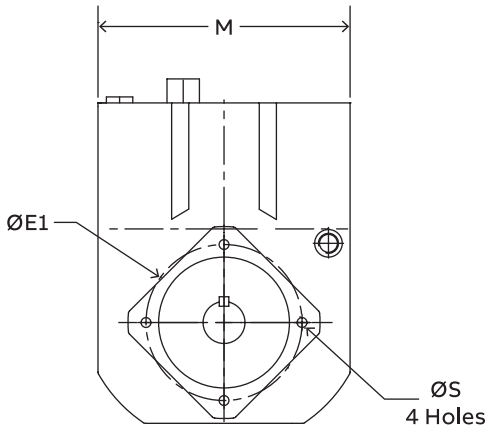

B14 Output flange

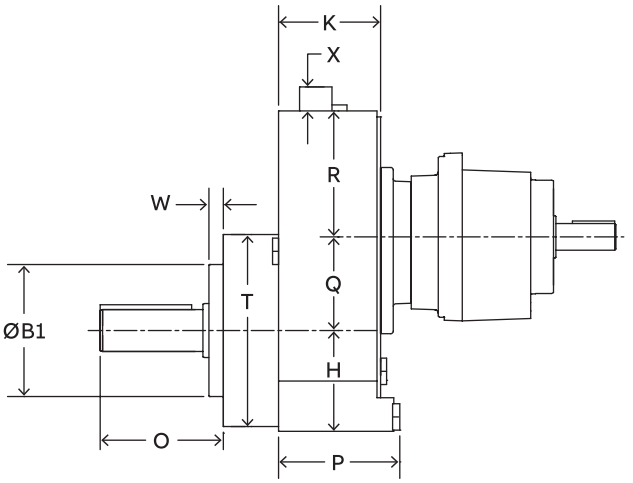

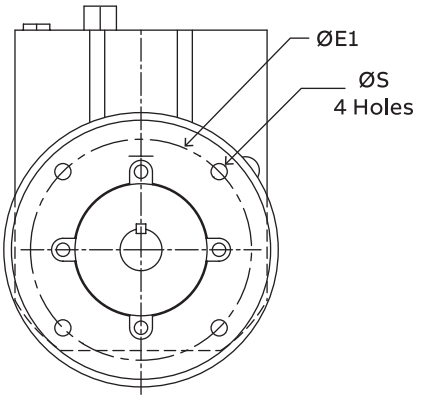

B5/NEMA Output flange

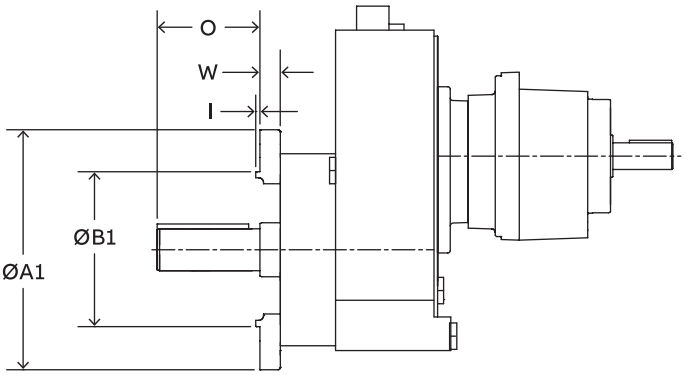

	Mounting dimensions					Outline dimensions							
	Ø B1	Ø E1	Ø S	W	O	H	K	P	M	R	T	Q	X
38	3.1496	3.937	M8 x 1.25	0.35	2.75	2.4	2.4	2.3	5.1	2.6	4.8	1.93	0.9
48	3.1496	3.937	M8 x 1.25	0.35	3.25	3.0	2.6	3.2	6.7	3.4	4.8	2.54	0.9
68	4.3307	5.118	M10 x 1.5	0.45	4.04	3.4	3.4	4.0	8.3	4.2	6.3	3.07	0.9
88	5.1181	6.496	M12 x 1.75	0.41	3.86	4.2	3.9	4.4	10.3	5.2	7.5	3.90	0.9

	Standard B5 flange dimensions							Optional B5 flange dimensions							NEMA flange dimensions						
	Ø A1	Ø B1	Ø E1	Ø S	I	W	O	Ø A1	Ø B1	Ø E1	Ø S	I	W	O	Ø A1	Ø B1	Ø E1	Ø S	I	W	O
38	6.3	4.3307	5.118	0.35	0.14	0.4	2.24	7.9	5.1181	6.496	0.43	0.14	0.5	2.24	6.5	4.500	5.875	0.41	0.15	0.7	2.12
48	6.3	4.3307	5.118	0.35	0.14	0.4	2.74	7.9	5.1181	6.496	0.43	0.14	0.5	2.74	9.0	8.500	7.250	0.53	0.26	0.4	2.88
68	7.9	5.1181	6.496	0.43	0.14	0.5	3.37	9.9	7.0866	8.465	0.53	0.16	0.6	3.37	9.0	8.500	7.250	0.53	0.26	0.7	3.38
88	9.9	7.0866	8.465	0.53	0.16	0.6	3.15	11.9	9.0551	10.433	0.53	0.16	0.7	3.15	–	–	–	–	–	–	–

Separate input shaft dimensions

HF_1S_

Separate – flange mounted
Single reduction

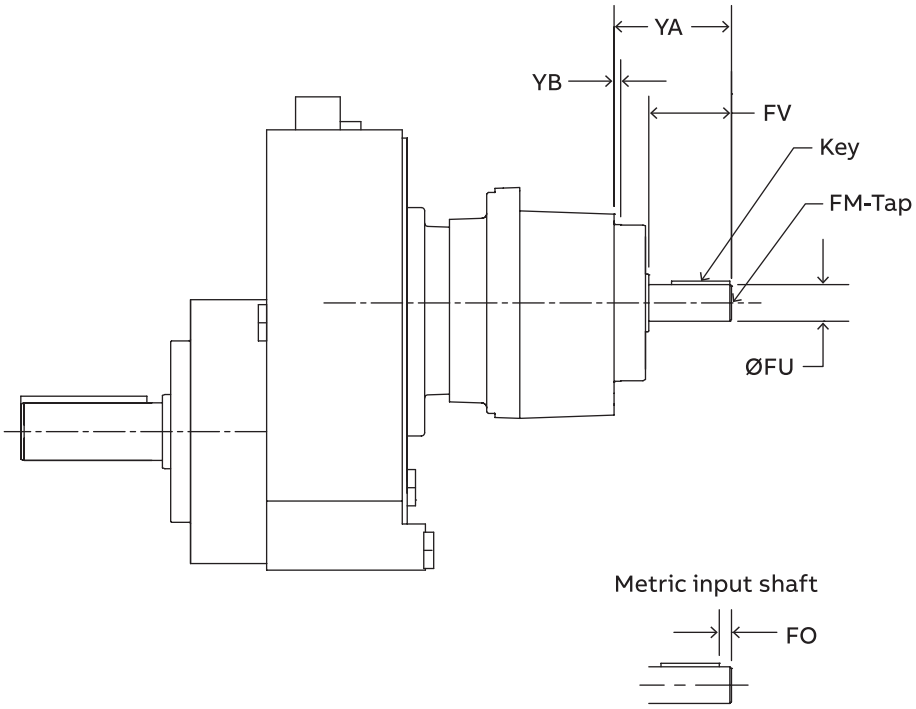

Separate input mounting dimensions

	Ø FU	Tol	FO	FV	YA	YB	FM x Depth	Key
71	0.625	+0.0000 -0.0005	–	1.57	2.40	0.16	8-32 UNC x 0.49	3/16 x 3/16 x 1-5/16
	16	+0.012 +0.001	4	40			M5 x 12.5	5 x 5 x 32
80	0.750	+0.0000 -0.0005	–	1.57	2.40	0.16	1/4-20 UNC x 0.63	3/16 x 3/16 x1-5/16
	19	+0.015 +0.002	4	10			M6 x 16	6 x 6 x 32
90	0.875	+0.0000 -0.0005	–	1.97	2.80	0.16	5/16-18 UNC x 0.75	3/16 x 3/16 x 1-5/8
	24	+0.015 +0.002	5	50			M8 x 19	8 x 7 x 40
100	1.125	+0.0000 -0.0005	–	2.36	3.27	0.16	3/8-16 UNC x 0.87	1/4 x 1/4 x 2
	28	+0.015 +0.002	5	60			M10 x 22	8 x 7 x 50
112	1.250	+0.0000 -0.0005	–	2.36	3.27	0.16	3/8-16 UNC x 0.87	1/4 x 1/4 x 2
	28	+0.015 +0.002	5	60			M10 x 22	8 x 7 x 50
132	1.375	+0.0000 -0.0005	–	3.15	6.61	0.14	3/8-16 UNC x 1.10	5/16 x 5/16 x 2-3/4
	38	+0.018 +0.002	5	80			M12 x 28	10 x 8 x 70
160	1.625	+0.0000 -0.0010	–	4.33	8.46	0.14	5/8-11 UNC x 1.42	3/8 x 3/8 x 3-1/2
	42	+0.018 +0.002	10	110			M16 x 36	12 x 8 x 90

Separate input shaft dimensions

Separate – flange mounted

Single reduction

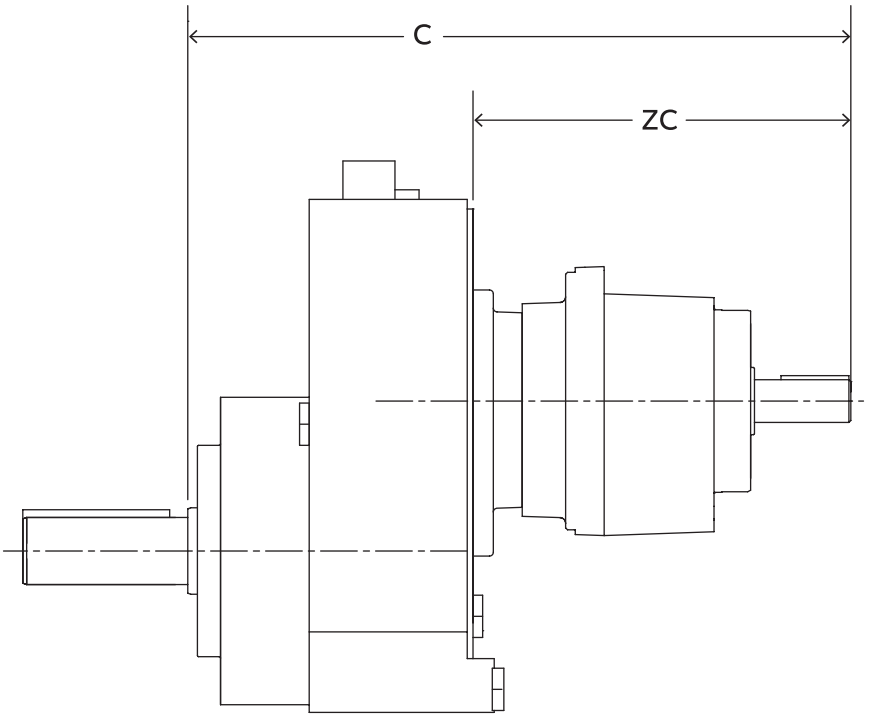

Inch separate input dimensions

Reducer size	Reducer stage	71		80		90		100		112		132		160	
		C	ZC	C	ZC	C	ZC	C	ZC	C	ZC	C	ZC	C	ZC
38	1	10.3	6.0	11.7	7.3	12.1	7.7	12.7	8.4	–	–	–	–	–	–
48	1	10.1	5.8	11.5	7.1	11.9	7.5	12.5	8.2	12.5	8.2	–	–	–	–
68	1	11.4	5.5	12.7	6.9	13.1	7.3	13.8	7.9	13.8	7.9	17.1	11.2	–	–
88	1	–	–	–	–	13.1	6.7	13.6	7.2	13.5	7.1	16.9	10.5	18.6	12.2

Metric separate input dimensions (dimensions in mm)

Reducer size	Reducer stage	71		80		90		100		112		132		160	
		C	ZC	C	ZC	C	ZC	C	ZC	C	ZC	C	ZC	C	ZC
38	1	261	151	296	186	306	196	322	212	–	–	–	–	–	–
48	1	256	146	291	181	301	191	317	207	318	208	–	–	–	–
68	1	288	140	323	175	333	185	349	201	348	200	432	284	–	–
88	1	–	–	–	–	332	170	345	183	343	181	428	266	471	309

Output shaft dimensions

Separate – flange mounted
Double and triple reduction

HF_2S_
HF_3S_

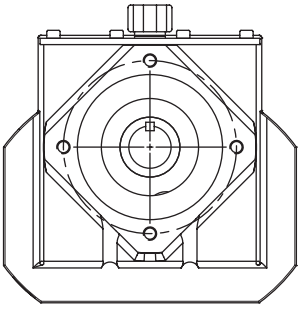

B14 Output flange

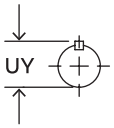

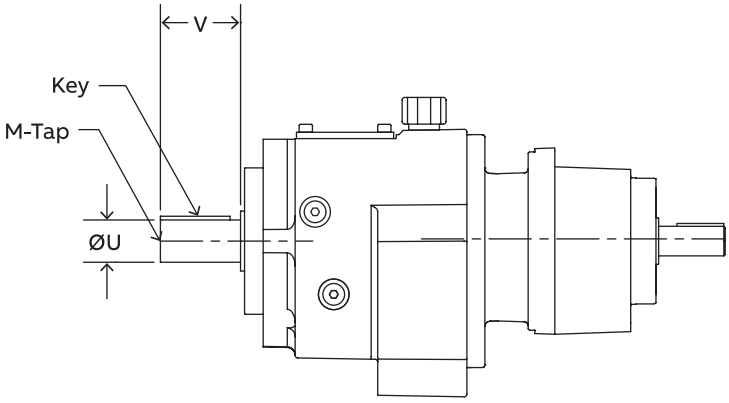

Metric output shaft

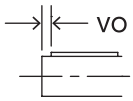

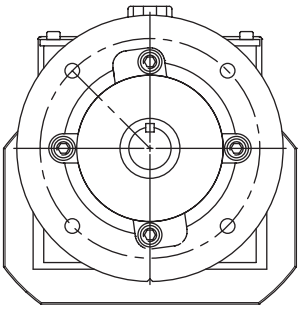

B5 Output flange

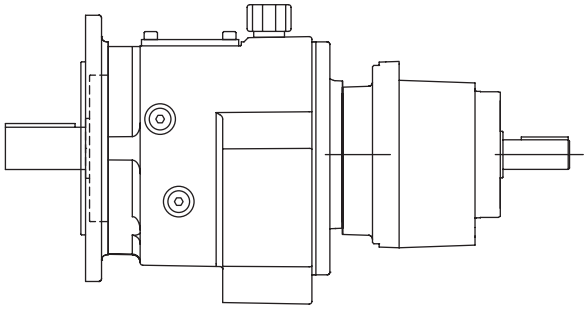

	Standard inch output shaft						Standard metric output shaft						
	Ø U	Tol.	UY	V	Key	M-Tap	Ø U	Tol.	UY	V	Vo	Key	M-Tap
38	1.000	+0.0000 -0.0005	1.11	1.97	1/4 x 1/4 x 1-5/8	3/8-16 UNC X 0.87	25	+0.015 +0.002	28	50	7	8 x 7 x 40	M10 x 22
48	1.250	+0.0000 -0.0005	1.36	2.36	1/4 x 1/4 x 2	3/8-16 UNC X 0.87	30	+0.015 +0.002	33	60	7	8 x 7 x 50	M10 x 22
58	1.375	+0.0000 -0.0005	1.49	2.76	5/16 x 5/16 x 2-1/8	1/2-13 UNC x 1.12	35	+0.014 +0.002	38	70	7	10 x 8 x 56	M12 x 28
68	1.625	+0.0000 -0.0010	1.79	3.15	3/8 x 3/8 x 2-5/8	5/8-11 UNC X 1.42	40	+0.018 +0.002	43	90	5	12 X 8 X 70	M16 x 36
88	2.125	+0.0000 -0.0010	2.35	3.94	1/2 x 1/2 x 3-1/4	3/4-10 UNC X 1.65	50	+0.018 +0.002	54	100	10	14 X 9 X 80	M16 x 36
108	2.375	+0.0000 -0.0010	2.65	4.72	5/8 x 5/8 x 3-15/16	3/4-10 UNC X 1.65	60	+0.030 +0.011	64	120	10	18 x 11 x 100	M20 x 42
128	2.875	+0.0000 -0.0010	3.20	5.51	3/4 x 3/4 x 4-1/2	3/4-10 UNC X 1.65	70	+0.030 +0.011	75	140	15	20 x 12 x 110	M20 x 42
148	3.625	+0.0000 -0.0010	4.01	6.69	7/8 x 7/8 x 5-5/8	1-8 UNC X 1.97	90	+0.035 +0.013	95	170	15	25 x 14 x 140	M24 x 50
168	4.000	+0.0000 -0.0010	4.44	8.27	1 x 1 x 7-1/8	1-8 UNC X 1.97	100	+0.035 +0.013	106	210	15	28 x 16 x 180	M24 x 50

Optional output shaft page ILH-227

Gearcase dimensions

Separate – flange mounted
Double and triple reduction

HF_2S_
HF_3S_

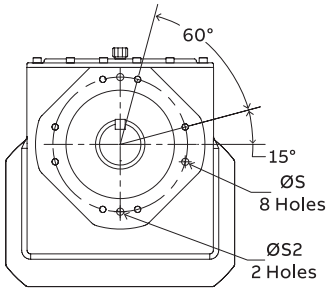

B14 Output flange
Sizes 108-168

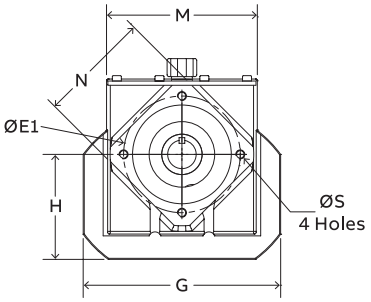

B14 Output flange
Sizes 38-88

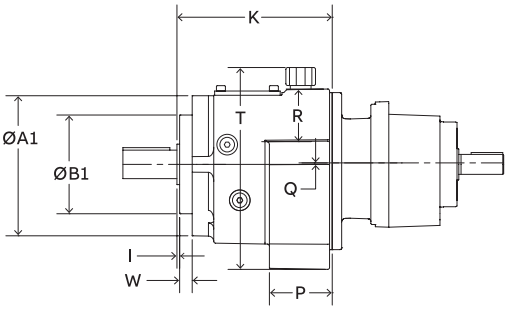

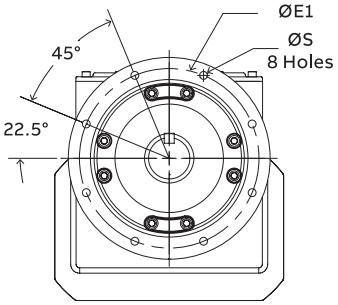

B5 Output flange
Sizes 128-168

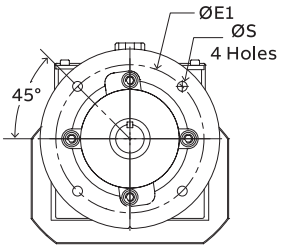

B5 Output flange
Sizes 38-108

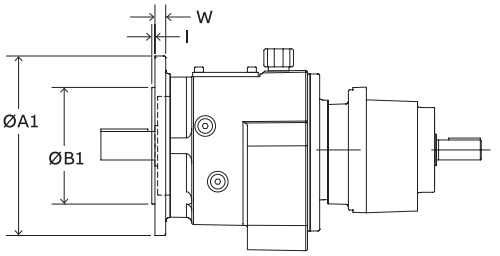

	Mounting dimensions						Outline dimensions								
	Ø A1	Ø B1	Ø E1	Ø S	Ø S2	W	H	G	K	P	M	N	R	T	Q
38	4.72	3.1497	3.94	M8 x 0.43	–	0.39	3.62	6.45	5.51	2.32	5.07	3.96	1.83	6.29	0
48	6.30	4.3308	5.12	M10 x 0.63	–	0.59	4.61	8.66	6.81	2.76	6.61	4.91	2.31	8.86	0
58	6.30	4.3308	5.12	M10 x 0.63	–	0.45	5.18	9.67	7.58	3.03	7.36	4.92	2.45	9.79	0
68	7.48	5.1182	6.50	M12 x 0.67	–	0.55	5.67	10.39	8.23	3.27	8.14	6.10	2.97	10.68	0
88	9.65	7.0867	8.47	M16 x 0.87	–	0.71	7.17	13.07	10.47	4.25	10.23	7.73	3.62	13.22	0
108	11.82	7.8741	9.84	M16 x 1.10	0.47	0.91	8.70	16.14	12.24	4.94	12.84	9.91	4.64	16.42	0
128	13.40	9.4489	11.81	M16 x 0.87	0.63	1.10	9.84	18.19	14.72	5.63	14.33	11.92	5.04	18.27	0
148	13.39	9.4489	11.81	M16 x 0.87	0.63	1.06	12.48	20.08	16.18	6.30	16.38	11.87	6.48	20.95	1.44
168	15.76	11.8110	13.78	M20 x 1.34	0.63	1.38	14.09	22.84	19.45	7.26	18.50	11.80	8.46	24.82	1.66

	Standard B5 flange dimensions						Optional B5 flange dimensions					
	Ø A1	Ø B1	Ø E1	Ø S	I	W	Ø A1	Ø B1	Ø E1	Ø S	I	W
38	6.30	4.3308	5.12	0.35	0.14	0.39	7.87	5.1182	6.50	0.43	0.14	0.47
48	7.87	5.1182	6.50	0.43	0.14	0.47	9.84	7.0867	8.47	0.53	0.16	0.59
58	7.87	5.1182	6.50	0.43	0.14	0.47	9.84	7.0867	8.47	0.53	0.16	0.59
68	9.84	7.0867	8.47	0.53	0.16	0.59	11.81	9.0552	10.43	0.53	0.16	0.63
88	11.81	9.0551	10.43	0.53	0.16	0.63	13.78	9.8419	11.81	0.69	0.20	0.71
108	13.77	9.8419	11.81	0.69	0.20	0.71	17.72	13.7788	15.75	0.69	0.20	0.79
128	13.77	9.8419	11.81	0.69	0.20	0.78	17.72	13.7788	15.75	0.69	0.20	0.87
148	17.72	13.7788	15.75	0.69	0.20	0.87	21.64	17.7157	19.69	0.69	0.20	0.98
168	17.72	13.7788	15.75	0.69	0.20	1.22	21.65	17.7157	19.69	0.69	0.20	1.22

Separate input shaft dimensions

HF_2S_
HF_3S_

Separate – flange mounted
Double and triple reduction

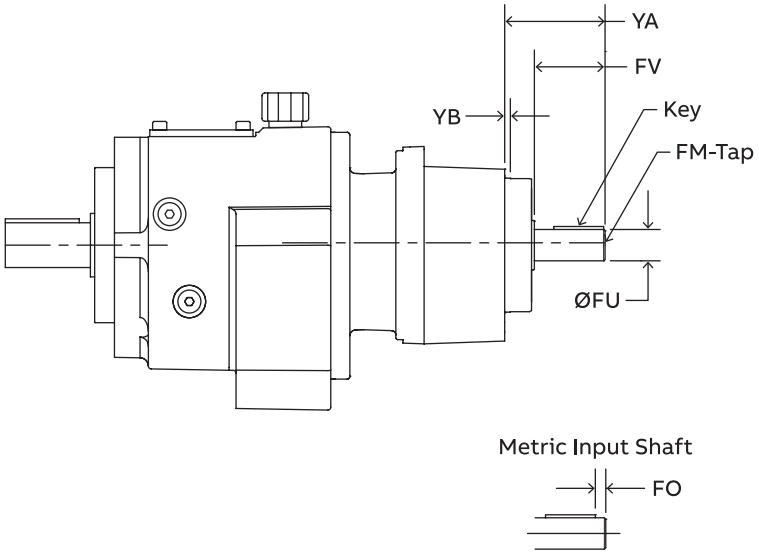

Separate input mounting dimensions

	Ø FU	Tol	FO	FV	YA	YB	FM x Depth	Key
71	0.625	+0.0000 -0.0005	–	1.57	2.40	0.16	8-32 UNC x 0.49	3/16 x 3/16 x 1-5/16
	16	+0.012 +0.001	4	40			M5 x 12.5	5 x 5 x 32
80	0.750	+0.0000 -0.0005	–	1.57	2.40	0.16	1/4-20 UNC x 0.63	3/16 x 3/16 x1-5/16
	19	+0.015 +0.002	4	10			M6 x 16	6 x 6 x 32
90	0.875	+0.0000 -0.0005	–	1.97	2.80	0.16	5/16-18 UNC x 0.75	3/16 x 3/16 x 1-5/8
	24	+0.015 +0.002	5	50			M8 x 19	8 x 7 x 40
100	1.125	+0.0000 -0.0005	–	2.36	3.27	0.16	3/8-16 UNC x 0.87	1/4 x 1/4 x 2
	28	+0.015 +0.002	5	60			M10 x 22	8 x 7 x 50
112	1.250	+0.0000 -0.0005	–	2.36	3.27	0.16	3/8-16 UNC x 0.87	1/4 x 1/4 x 2
	28	+0.015 +0.002	5	60			M10 x 22	8 x 7 x 50
132	1.375	+0.0000 -0.0005	–	3.15	6.61	0.14	3/8-16 UNC x 1.10	5/16 x 5/16 x 2-3/4
	38	+0.018 +0.002	5	80			M12 x 28	10 x 8 x 70
160	1.625	+0.0000 -0.0010	–	4.33	8.46	0.14	5/8-11 UNC x 1.42	3/8 x 3/8 x 3-1/2
	42	+0.018 +0.002	10	110			M16 x 36	12 x 8 x 90
180	2.125	+0.0000 -0.0010	–	4.33	9.25	0.20	3/4-10 UNC x 1.65	1/2 x 1/2 x 3-5/8
	55	+0.030 +0.011	10	110			M20 x 42	16 x 10 x 90
225	2.125	+0.0000 -0.0010	–	4.33	9.05	0.20	3/4-10 UNC x 1.65	1/2 x 1/2 x 3-5/8
	60	+0.030 +0.011	15	140			M20 x 42	18 x 11 x 110
250	2.375	+0.0000 -0.0010	–	5.51	10.20	0.20	3/4-10 UNC x 1.65	5/8 x 5/8 x 4-3/8
	65	+0.030 +0.011	15	140			M20 x 42	18 x 11 x 110

Separate input shaft dimensions

HF_2S_
HF_3S_

Separate – flange mounted
Double and triple reduction

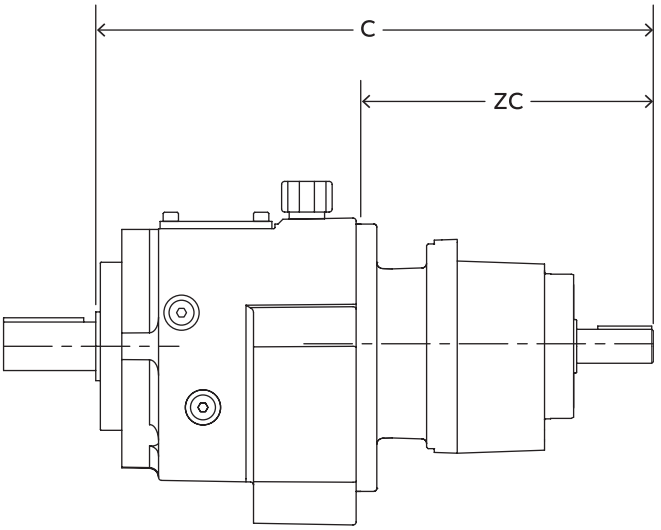

Inch separate input dimensions

Reducer size	Reducer stage	71		80		90		100		112		132		160		180		225		250	
		C	ZC	C	ZC	C	ZC	C	ZC	C	ZC	C	ZC	C	ZC	C	ZC	C	ZC	C	ZC
38	2	11.46	5.95	12.83	7.32	13.23	7.72	13.86	8.35	–	–	–	–	–	–	–	–	–	–	–	–
	3	12.05	6.54	13.43	7.92	13.82	8.31	–	–	–	–	–	–	–	–	–	–	–	–	–	–
48	2	12.56	5.75	13.94	7.13	14.33	7.52	14.96	8.15	15.00	8.19	–	–	–	–	–	–	–	–	–	–
	3	13.23	6.42	14.61	7.80	15.00	8.19	15.63	8.82	–	–	–	–	–	–	–	–	–	–	–	–
58	2	12.97	5.39	14.35	6.77	14.75	7.17	15.37	7.79	15.28	7.70	18.79	11.21	–	–	–	–	–	–	–	–
	3	13.75	6.14	15.10	7.52	15.50	7.92	16.12	8.54	–	–	–	–	–	–	–	–	–	–	–	–
68	2	13.74	5.51	15.12	6.89	15.51	7.28	16.14	7.91	16.10	7.87	19.41	11.18	–	–	–	–	–	–	–	–
	3	14.45	6.22	15.83	7.60	16.22	7.99	16.85	8.62	–	–	–	–	–	–	–	–	–	–	–	–
88	2	–	–	–	–	17.17	6.70	17.68	7.21	17.60	7.13	20.94	10.47	22.64	12.17	–	–	–	–	–	–
	3	16.38	5.91	17.76	7.29	18.15	7.68	18.78	8.31	18.74	8.27	22.05	11.58	–	–	–	–	–	–	–	–
108	2	–	–	–	–	–	–	–	–	18.94	6.70	22.20	9.96	23.98	11.74	24.76	12.52	–	–	–	–
	3	–	–	19.29	7.05	19.69	7.45	20.31	8.07	20.16	7.92	23.50	11.26	25.12	12.88	–	–	–	–	–	–
128	2	–	–	–	–	–	–	–	–	24.29	9.57	25.79	11.07	26.73	12.01	27.80	13.08	–	–	–	–
	3	–	–	–	–	21.89	7.17	22.52	7.80	22.32	7.60	25.63	10.91	27.24	12.52	28.19	13.47	–	–	–	–
148	2	–	–	–	–	–	–	–	–	–	–	24.43	9.25	26.97	10.74	27.87	11.69	29.98	12.8	30.12	13.94
	3	–	–	–	–	–	–	23.78	7.60	23.66	7.48	26.93	10.75	28.46	12.28	29.37	13.19	30.47	14.29	–	–
168	2	–	–	–	–	–	–	–	–	–	–	28.11	8.66	29.65	10.20	30.59	11.14	31.65	12.20	32.84	13.39
	3	–	–	–	–	–	–	–	–	–	–	29.73	10.28	31.26	11.81	32.21	12.76	33.27	13.82	34.45	15.00

Metric separate input dimensions (dimensions in mm)

Reducer size	Reducer stage	71		80		90		100		112		132		160		180		225		250	
		C	ZC	C	ZC	C	ZC	C	ZC	C	ZC	C	ZC	C	ZC	C	ZC	C	ZC	C	ZC
38	2	291	151	326	186	336	196	352	212	–	–	–	–	–	–	–	–	–	–	–	–
	3	306	166	341	201	351	211	–	–	–	–	–	–	–	–	–	–	–	–	–	–
48	2	319	146	354	181	364	191	380	207	381	208	–	–	–	–	–	–	–	–	–	–
	3	336	163	371	198	381	208	397	224	–	–	–	–	–	–	–	–	–	–	–	–
58	2	329	137	364	172	375	182	390	198	388	196	477	285	–	–	–	–	–	–	–	–
	3	348	156	384	191	394	201	409	198	–	–	–	–	–	–	–	–	–	–	–	–
68	2	349	140	384	175	394	185	410	201	409	200	493	284	–	–	–	–	–	–	–	–
	3	367	158	402	193	412	203	428	219	–	–	–	–	–	–	–	–	–	–	–	–
88	2	–	–	–	–	436	170	449	183	447	181	532	266	575	309	–	–	–	–	–	–
	3	416	150	451	461	195	477	211	476	210	560	294	–	–	–	–	–	–	–	–	–
108	2	–	–	–	–	–	–	–	–	481	170	564	253	609	298	629	318	–	–	–	–
	3	–	–	490	179	500	189	516	205	512	201	597	286	638	327	–	–	–	–	–	–
128	2	–	–	–	–	–	–	–	–	–	–	617	243	655	281	679	305	736	362	–	–
	3	–	–	–	–	556	182	572	198	567	193	651	277	692	318	716	342	–	–	–	–
148	2	–	–	–	–	–	–	–	–	–	–	646	235	685	274	708	297	766	355	765	354
	3	–	–	–	–	–	–	604	193	601	190	684	273	723	312	746	335	804	393	–	–
168	2	–	–	–	–	–	–	–	–	–	–	714	220	753	259	777	283	834	340	834	340
	3	–	–	–	–	–	–	–	–	–	–	755	261	794	300	818	324	875	381	875	381

Output shaft dimensions

Separate – flange mounted

Four- and five-stage reduction

HF_4S_
HF_5S_

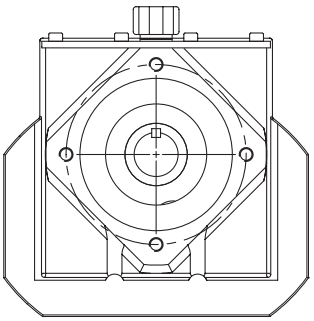

B14 Output flange

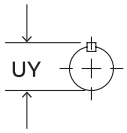

Metric output shaft

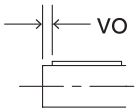

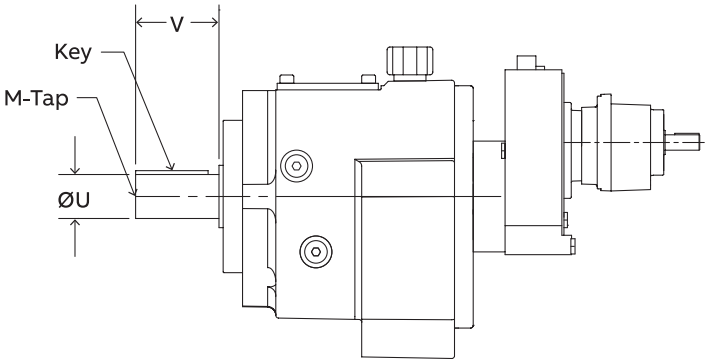

4 Stage reduction

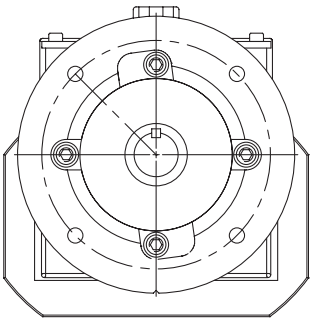

B5 Output flange

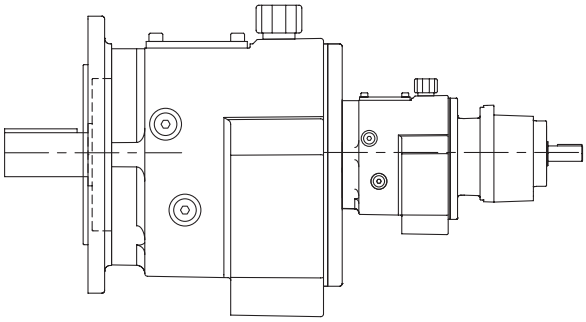

5 Stage reduction

	Standard inch output shaft						Standard metric output shaft						
	Ø U	Tol.	UY	V	Key	M-Tap	Ø U	Tol.	UY	V	Vo	Key	M-Tap
38	1.000	+0.0000 -0.0005	1.11	1.97	1/4 x 1/4 x 1-5/8	3/8-16 UNC X 0.87	25	+0.015 +0.002	28	50	7	8 x 7 x 40	M10 x 22
48	1.250	+0.0000 -0.0005	1.36	2.36	1/4 x 1/4 x 2	3/8-16 UNC X 0.87	30	+0.015 +0.002	33	60	7	8 x 7 x 50	M10 x 22
68	1.625	+0.0000 -0.0010	1.79	3.15	3/8 x 3/8 x 2-5/8	5/8-11 UNC X 1.42	40	+0.018 +0.002	43	90	5	12 X 8 X 70	M16 x 36
88	2.125	+0.0000 -0.0010	2.35	3.94	1/2 x 1/2 x 3-1/4	3/4-10 UNC X 1.65	50	+0.018 +0.002	54	100	10	14 X 9 X 80	M16 x 36
108	2.375	+0.0000 -0.0010	2.65	4.72	5/8 x 5/8 x 3-15/16	3/4-10 UNC X 1.65	60	+0.030 +0.011	64	120	10	18 x 11 x 100	M20 x 42
128	2.875	+0.0000 -0.0010	3.20	5.51	3/4 x 3/4 x 4-1/2	3/4-10 UNC X 1.65	70	+0.030 +0.011	75	140	15	20 x 12 x 110	M20 x 42
148	3.625	+0.0000 -0.0010	4.01	6.69	7/8 x 7/8 x 5-5/8	1-8 UNC X 1.97	90	+0.035 +0.013	95	170	15	25 x 14 x 140	M24 x 50
168	4.000	+0.0000 -0.0010	4.44	8.27	1 x 1 x 7-1/8	1-8 UNC X 1.97	100	+0.035 +0.013	106	210	15	28 x 16 x 180	M24 x 50

Optional output shaft page ILH-227

Gearcase dimensions

Separate – flange mounted

Four- and five-stage reduction

HF_4S_
HF_5S_

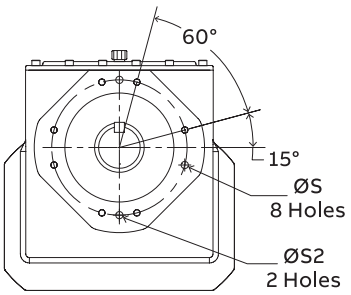

B14 Output flange
Sizes 108-168

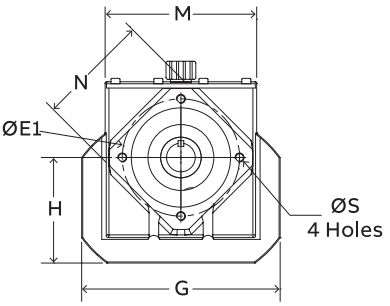

B14 Output flange
Sizes 38-88

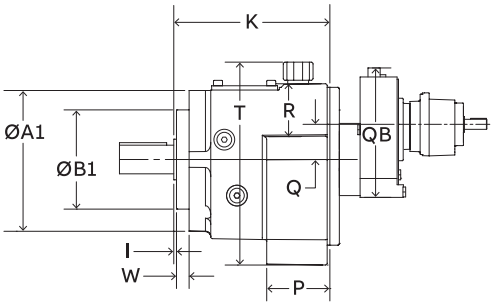

4 Stage reduction

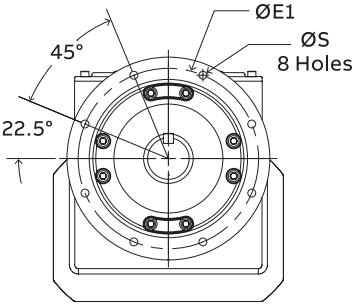

B5 Output flange
Sizes 128-168

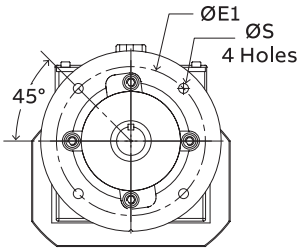

B5 Output flange
Sizes 38-108

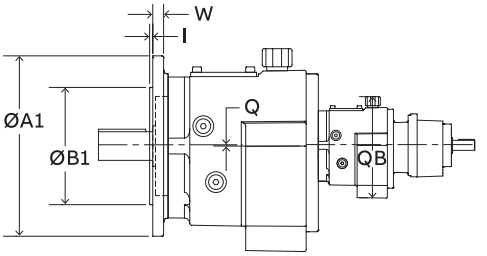

5 Stage reduction

	Mounting dimensions – B14 flange						Outline dimensions								
	Ø A1	Ø B1	Ø E1	Ø S	Ø S2	W	H	G	K	P	M	N	R	T	Q
38	4.72	3.1497	3.94	M8 x 0.43	–	0.39	3.62	6.45	5.51	2.32	5.07	3.96	1.83	6.29	0
48	6.30	4.3308	5.12	M10 x 0.63	–	0.59	4.61	8.66	6.81	2.76	6.61	4.91	2.31	8.86	0
68	7.48	5.1182	6.50	M12 x 0.67	–	0.55	5.67	10.39	8.23	3.27	8.14	6.10	2.97	10.68	0
88	9.65	7.0867	8.47	M16 x 0.87	–	0.71	7.17	13.07	10.47	4.25	10.23	7.73	3.62	13.22	0
108	11.82	7.8741	9.84	M16 x 1.10	0.47	0.91	8.70	16.14	12.24	4.94	12.84	9.91	4.64	16.42	0
128	13.40	9.4489	11.81	M16 x 0.87	0.63	1.10	9.84	18.19	14.72	5.63	14.33	11.92	5.04	18.27	0
148	13.39	9.4489	11.81	M16 x 0.87	0.63	1.06	12.48	20.08	16.18	6.30	16.38	11.87	6.48	20.95	1.44
168	15.76	11.8110	13.78	M20 x 1.34	0.63	1.38	14.09	22.84	19.45	7.26	18.50	11.80	8.46	24.82	1.66

	Standard B5 flange dimensions						Optional B5 flange dimensions						4 stage		5 stage	
	Ø A1	Ø B1	Ø E1	Ø S	I	W	Ø A1	Ø B1	Ø E1	Ø S	I	W	Q	QB	Q	QB
38	6.30	4.3308	5.12	0.35	0.14	0.39	7.87	5.1182	6.50	0.43	0.14	0.47	1.93	7.83	0	6.29
48	7.87	5.1182	6.50	0.43	0.14	0.47	9.84	7.0867	8.47	0.53	0.16	0.59	1.93	7.83	0	6.29
68	9.84	7.0867	8.47	0.53	0.16	0.59	11.81	9.0552	10.43	0.53	0.16	0.63	1.93	7.83	0	6.29
88	11.81	9.0551	10.43	0.53	0.16	0.63	13.78	9.8419	11.81	0.69	0.20	0.71	2.54	9.84	0	8.86
108	13.77	9.8419	11.81	0.69	0.20	0.71	17.72	13.7788	15.75	0.69	0.20	0.79	2.54	9.84	0	8.86
128	13.77	9.8419	11.81	0.69	0.20	0.78	17.72	13.7788	15.75	0.69	0.20	0.87	3.07	11.57	0	8.86
148	17.72	13.7788	15.75	0.69	0.20	0.87	21.64	17.7157	19.69	0.69	0.20	0.98	1.63	11.57	1.44	8.86
168	17.72	13.7788	15.75	0.69	0.20	1.22	21.65	17.7157	19.69	0.69	0.20	1.22	1.41	11.57	1.66	10.68

Separate input shaft dimensions

Separate – flange mounted

Four- and five-stage reduction

HF_4S_
HF_5S_

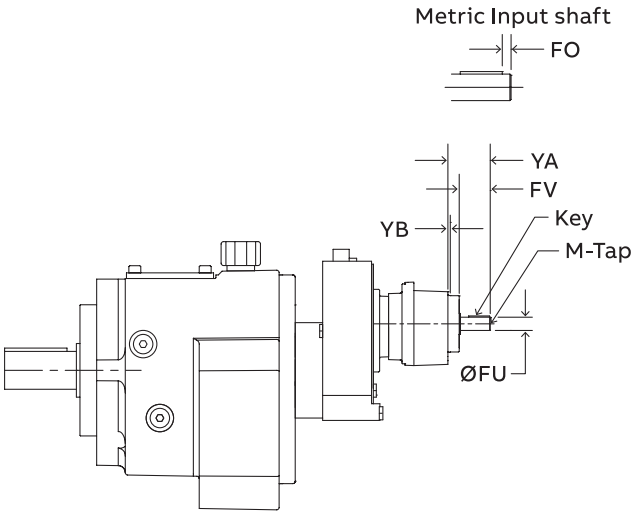

4 Stage reduction

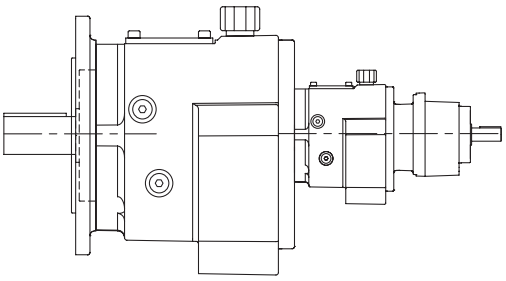

5 Stage reduction

Separate iInput mounting dimensions

	Ø FU	Tol	FO	FV	YA	YB	FM x Depth	Key
71	0.625	+0.0000 -0.0005	–	1.57	2.40	0.16	8-32 UNC x 0.49	3/16 x 3/16 x 1-5/16
	16	+0.012 +0.001	4	40			M5 x 12.5	5 x 5 x 32
80	0.750	+0.0000 -0.0005	–	1.57	2.40	0.16	1/4-20 UNC x 0.63	3/16 x 3/16 x1-5/16
	19	+0.015 +0.002	4	10			M6 x 16	6 x 6 x 32
90	0.875	+0.0000 -0.0005	–	1.97	2.80	0.16	5/16-18 UNC x 0.75	3/16 x 3/16 x 1-5/8
	24	+0.015 +0.002	5	50			M8 x 19	8 x 7 x 40
100	1.125	+0.0000 -0.0005	–	2.36	3.27	0.16	3/8-16 UNC x 0.87	1/4 x 1/4 x 2
	28	+0.015 +0.002	5	60			M10 x 22	8 x 7 x 50
112	1.250	+0.0000 -0.0005	–	2.36	3.27	0.16	3/8-16 UNC x 0.87	1/4 x 1/4 x 2
	28	+0.015 +0.002	5	60			M10 x 22	8 x 7 x 50
132	1.375	+0.0000 -0.0005	–	3.15	6.61	0.14	3/8-16 UNC x 1.10	5/16 x 5/16 x 2-3/4
	38	+0.018 +0.002	5	80			M12 x 28	10 x 8 x 70

Separate input shaft dimensions

Separate – flange mounted

Four- and five-stage reduction

HF_4S_
HF_5S_

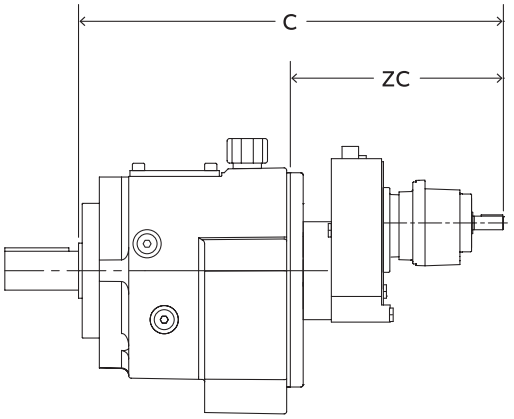

4 Stage reduction

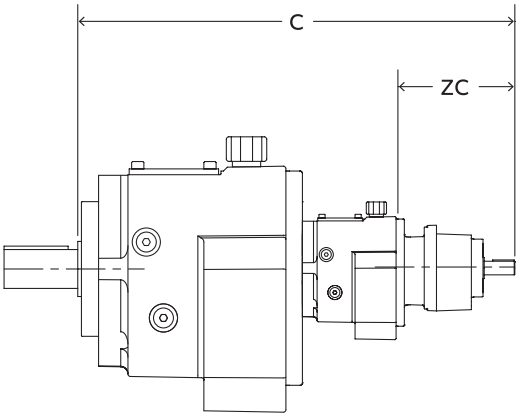

5 Stage reduction

Inch separate input dimensions

Reducer size	Reducer stage	71		80		90		100		112		132	
		C	ZC	C	ZC	C	ZC	C	ZC	C	ZC	C	ZC
38	4	16.46	10.95	17.76	12.25	18.16	12.65	18.86	13.35	–	–	–	–
	5	17.59	12.08	18.96	13.45	19.36	13.85	19.99	14.48	–	–	–	–
48	4	17.37	10.56	18.67	11.86	19.07	12.26	19.77	12.96	–	–	–	–
	5	18.50	11.69	19.87	13.06	20.27	13.46	20.90	14.09	–	–	–	–
68	4	18.73	10.50	20.03	11.80	20.43	12.20	21.13	12.90	–	–	–	–
	5	19.86	11.63	21.23	13.00	21.63	13.40	22.26	14.03	–	–	–	–
88	4	20.79	10.32	22.09	11.62	22.49	12.02	23.19	12.72	23.19	12.72	–	–
	5	23.13	12.66	24.51	14.04	24.90	14.43	25.53	15.06	25.57	15.10	–	–
108	4	22.88	10.64	24.18	11.94	24.58	12.34	25.28	13.04	25.28	13.04	–	–
	5	24.75	12.51	26.13	13.89	26.52	14.28	27.15	14.91	27.19	14.95	–	–
128	4	25.78	11.06	27.18	12.46	27.58	12.86	28.18	13.46	28.18	13.46	31.48	16.76
	5	27.02	12.30	28.40	13.68	28.79	14.07	29.42	14.70	29.46	14.74	–	–
148	4	27.09	10.91	28.49	12.31	28.89	12.71	29.49	13.31	29.49	13.31	32.79	16.61
	5	28.32	12.14	29.70	13.52	30.09	13.91	30.72	14.54	30.76	14.58	–	–
168	4	30.97	11.52	32.37	12.92	32.77	13.32	33.37	13.92	33.37	13.92	36.67	17.22
	5	33.34	13.89	34.72	15.27	35.11	15.66	35.74	16.29	35.70	16.25	39.01	19.56

Metric separate input dimensions (dimensions in mm)

Reducer size	Reducer stage	71		80		90		100		112		132	
		C	ZC	C	ZC	C	ZC	C	ZC	C	ZC	C	ZC
38	4	418	278	451	311	461	321	479	339	–	–	–	–
	5	447	307	482	342	492	352	508	368	–	–	–	–
48	4	441	268	474	301	484	311	502	329	–	–	–	–
	5	470	297	505	332	515	342	531	358	–	–	–	–
68	4	476	267	509	300	519	310	537	328	–	–	–	–
	5	504	295	539	330	549	340	565	356	–	–	–	–
88	4	528	262	561	295	571	305	589	323	589	323	–	–
	5	588	322	623	357	632	367	648	383	650	384	–	–
108	4	581	270	614	303	624	313	642	331	642	331	–	–
	5	629	318	664	353	674	363	690	379	691	380	–	–
128	4	655	281	690	317	701	327	716	342	716	342	800	426
	5	686	312	721	347	731	357	747	373	748	374	–	–
148	4	688	277	724	313	734	323	749	338	749	338	833	422
	5	719	308	754	343	764	353	780	369	781	370	–	–
168	4	787	293	822	328	832	338	848	353	848	353	931	437
	5	847	353	882	388	892	398	908	414	907	413	991	497

Output shaft dimensions

HB_1GH_

Integral – foot mounted
Single reduction

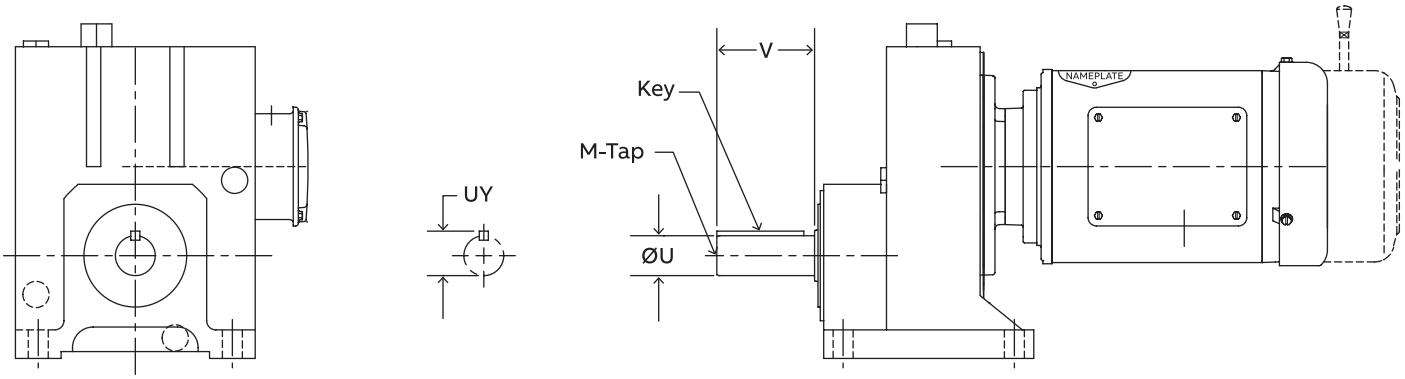

Metric output shaft

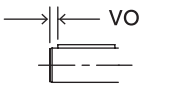

	Standard inch output shaft						Standard metric output shaft						
	Ø U	Tol.	UY	V	Key	M-Tap	Ø U	Tol.	UY	V	Vo	Key	M-Tap
38	0.875	+0.000 -0.001	0.95	2.24	3/16 x 3/16 x 1.50	5/16-18 UNC	20	+0.015 +0.002	22.5	40	5	6 x 6 x 30	M6 x 16
48	1.125	+0.000 -0.001	1.23	2.74	1/4 x 1/4 x 2.35	3/8-16 UNC	25	+0.015 +0.002	28	50	7	8 x 7 x 40	M10 x 22
68	1.375	+0.000 -0.001	1.51	3.37	5/16 x 5/16 x 3.00	3/8-16 UNC	30	+0.015 +0.002	33	60	7	8 x 7 x 50	M10 x 36
88	1.625	+0.000 -0.001	1.79	3.15	3/8 x 3/8 x 2.75	5/8-11 UNC	40	+0.018 +0.002	43	80	5	12 X 8 X 70	M16 X 36

Gearcase dimensions

Integral – foot mounted
Single reduction

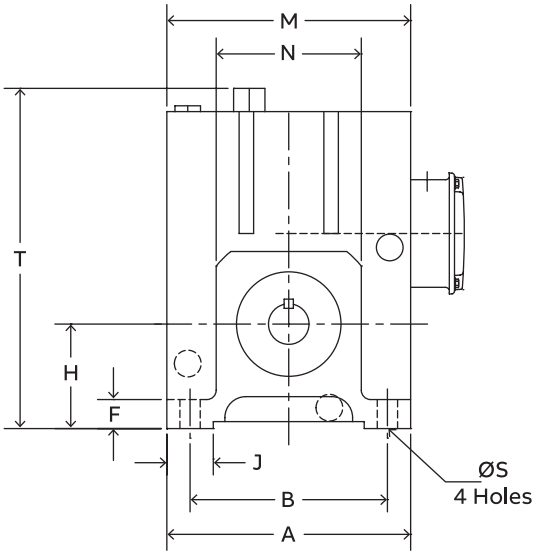

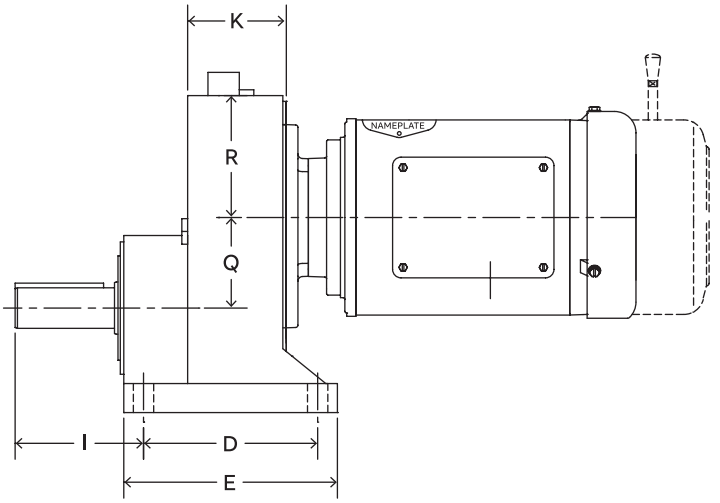

	Mounting dimensions										Outline dimensions				
	A	B	D	E	F	H	J	Ø S	I	K	M	N	R	T	Q
38	6.1	4.92	4.33	5.4	0.7	2.2	1.4	0.43	2.9	2.34	5.1	3.6	2.6	6.7	1.93
48	6.7	5.31	4.72	6.0	0.8	3.2	1.5	0.53	3.8	2.60	6.7	3.8	3.4	9.9	2.54
68	8.3	6.69	5.91	7.3	1.0	3.6	1.6	0.69	4.4	3.35	8.3	5.0	4.2	11.6	3.07
88	8.46	10.3	6.30	8.1	1.2	4.0	2.4	0.69	4.4	3.86	10.3	6.3	5.2	13.8	3.9

Standard motor dimensions

HB_1GH_

Integral – foot mounted
Single reduction

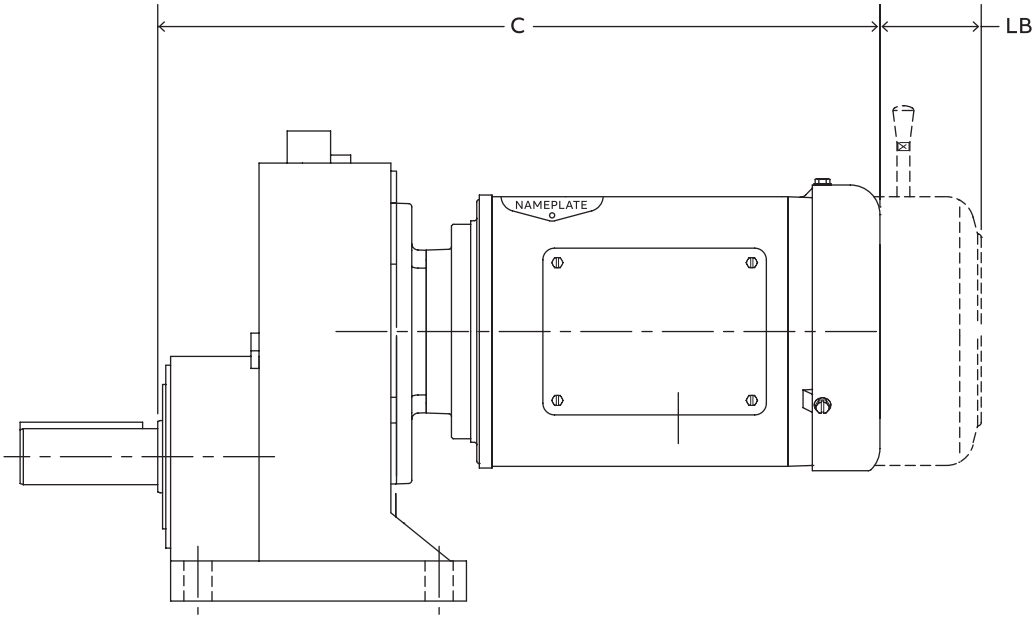

Standard integral motor dimensions 1/4 – 10 Hp

Reducer size	Reducer stage	71C4/71D4/71E4		80F4		80G4		90H4		90I4		100J4		112L4		132M4		132N4	
		C	LB	C	LB	C	LB	C	LB	C	LB	C	LB	C	LB	C	LB	C	LB
38	1	14.94	2.37	15.09	2.11	16.46	1.74	16.56	2.62	17.44	1.74	19.40	1.75	–	–	–	–	–	–
48	1	14.61	2.37	14.76	2.11	16.13	1.74	16.23	2.62	17.11	1.74	19.07	1.75	20.83	2.51	–	–	–	–
68	1	15.87	2.37	16.02	2.11	17.39	1.74	17.49	2.62	18.37	1.74	20.33	1.75	22.02	2.51	23.54	6.38	25.04	6.38
88	1	–	–	–	–	–	–	17.43	2.62	18.31	1.74	20.17	1.75	21.82	2.51	23.34	6.38	24.84	6.38

See page Eng-20 for additional integral gearmotor information.

Washdown motor dimensions

Integral – foot mounted
Single reduction

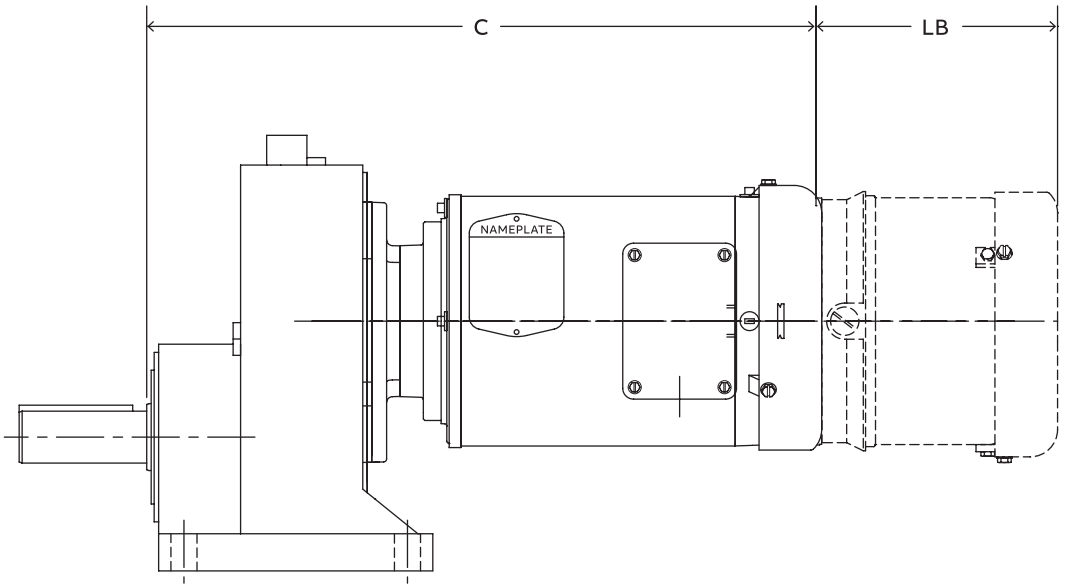

Washdown integral motor dimensions 1/2 – 10 Hp

Reducer size	Reducer stage	71E4		80F4		80G4		90H4		90I4		100J4		112L4		132M4		132N4	
		C	LB	C	LB	C	LB	C	LB	C	LB	C	LB	C	LB	C	LB	C	LB
38	1	15.56	4.81	15.46	4.81	16.46	3.81	16.56	5.26	17.44	5.26	20.79	6.24	–	–	–	–	–	–
48	1	15.23	4.81	15.13	4.81	16.13	3.81	16.23	5.26	17.11	5.26	20.46	6.24	20.83	5.26	–	–	–	–
68	1	16.49	4.81	16.39	4.81	17.39	3.81	17.49	5.26	18.37	5.26	21.72	6.24	22.02	5.26	23.54	8.44	25.04	8.94
88	1	–	–	–	–	–	–	17.43	5.26	18.31	5.26	21.56	6.24	21.82	5.26	23.34	8.44	24.84	8.94

See page Eng-20 for additional integral gearmotor information.

Output shaft dimensions

Integral – foot mounted

Double and triple reduction

HB_2GH_
HB_3GH_

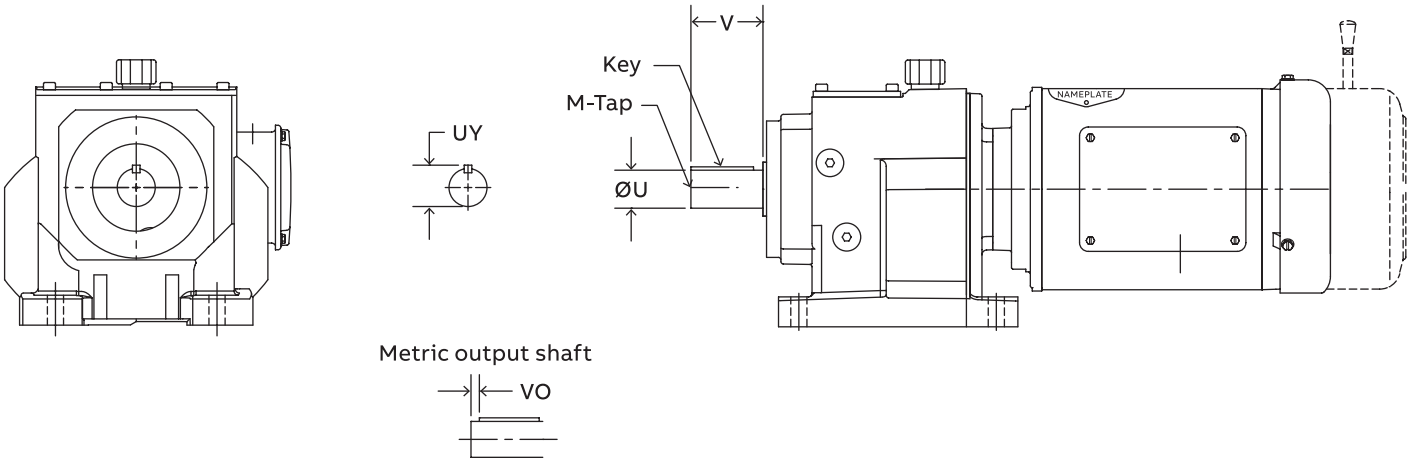

	Standard inch output shaft						Standard metric output shaft						
	Ø U	Tol.	UY	V	Key	M-Tap	Ø U	Tol.	UY	V	Vo	Key	M-Tap
38	1.000	+0.0000 -0.0005	1.11	1.97	1/4 x 1/4 x 1-5/8	3/8-16 UNC X 0.87	25	+0.015 +0.002	28	50	7	6 x 6 x 30	M10 x 22
48	1.250	+0.0000 -0.0005	1.36	2.36	1/4 x 1/4 x 2	3/8-16 UNC X 0.87	30	+0.015 +0.002	33	60	7	8 x 7 x 40	M10 x 22
58	1.375	+0.0000 -0.0005	1.49	2.76	5/16 x 5/16 x 2-1/8	1/2-13 UNC x 1.12	35	+0.014 +0.002	38	70	7	10 x 8 x 56	M12 x 28
68	1.625	+0.0000 -0.0010	1.79	3.15	3/8 x 3/8 x 2-5/8	5/8-11 UNC X 1.42	40	+0.018 +0.002	43	90	5	12 X 8 X 70	M16 x 36
88	2.125	+0.0000 -0.0010	2.35	3.94	1/2 x 1/2 x 3-1/4	3/4-10 UNC X 1.65	50	+0.018 +0.002	54	100	10	14 X 9 X 80	M16 x 36
108	2.375	+0.0000 -0.0010	2.65	4.72	5/8 x 5/8 x 3-15/16	3/4-10 UNC X 1.65	60	+0.030 +0.011	64	120	10	18 x 11 x 100	M20 x 42
128	2.875	+0.0000 -0.0010	3.20	5.51	3/4 x 3/4 x 4-1/2	3/4-10 UNC X 1.65	70	+0.030 +0.011	75	140	15	20 x 12 x 110	M20 x 42
148	3.625	+0.0000 -0.0010	4.01	6.69	7/8 x 7/8 x 5-5/8	1-8 UNC X 1.97	90	+0.035 +0.013	95	170	15	25 x 14 x 140	M24 x 50
168	4.000	+0.0000 -0.0010	4.44	8.27	1 x 1 x 7-1/8	1-8 UNC X 1.97	100	+0.035 +0.013	106	210	15	28 x 16 x 180	M24 x 50

Optional output shaft page ILH-227

Gearcase dimensions

Integral – foot mounted
Double and triple reduction

HB_2GH_
HB_3GH_

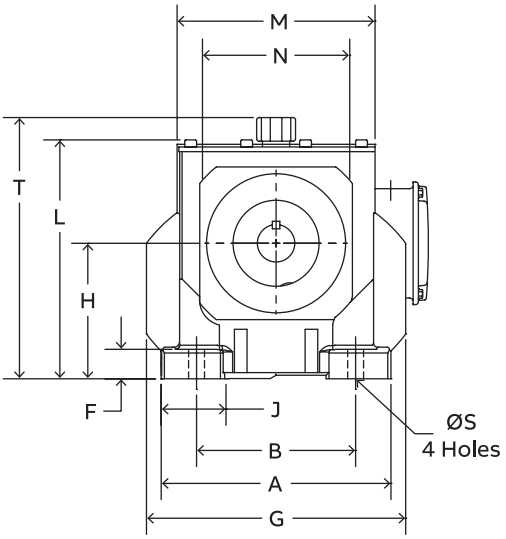

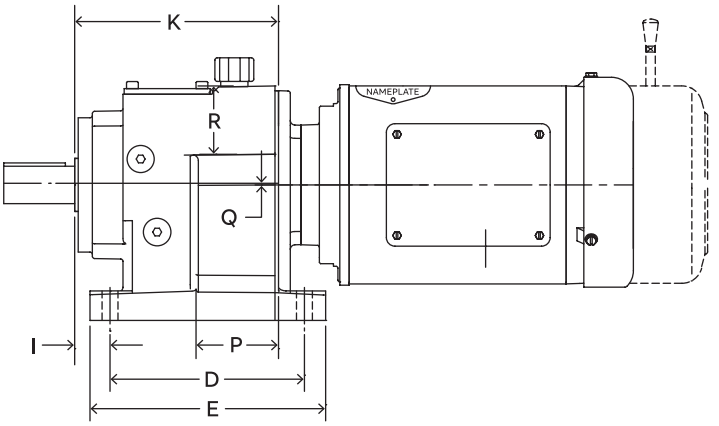

	Mounting dimensions										Outline dimensions							
	A	B	D	E	F	G	H	J	Ø S	I	K	P	L	M	N	R	T	Q
38	5.77	4.33	5.12	6.30	0.79	6.42	3.54	1.33	0.39	0.98	5.51	2.33	6.21	5.07	3.77	1.83	–	0
48	7.68	5.32	6.50	7.87	0.98	8.66	4.53	2.17	0.53	1.18	6.81	2.76	7.98	6.61	4.92	2.28	8.73	0
58	8.27	5.91	7.68	9.25	1.12	9.80	5.12	2.36	0.55	1.09	7.58	3.02	9.00	7.48	5.58	2.47	9.77	0
68	9.25	6.69	8.07	9.65	1.18	10.35	5.51	2.36	0.69	1.38	8.23	3.27	9.65	8.41	6.32	3.03	10.58	0
88	11.42	8.47	10.24	12.21	1.77	13.07	7.09	2.95	0.69	1.58	10.47	4.26	12.21	10.24	7.87	3.70	13.17	0
108	13.39	9.84	12.21	14.37	1.97	16.14	8.86	3.58	0.87	1.56	12.24	4.94	15.32	12.05	9.85	4.24	16.20	0
128	15.75	11.42	14.57	17.32	2.17	18.19	9.84	4.33	1.02	1.77	14.72	5.63	17.13	14.33	11.82	4.89	18.08	0
148	17.72	13.39	16.14	19.29	2.36	20.07	12.40	4.34	1.30	1.97	16.18	6.30	19.71	16.38	11.82	6.24	20.55	1.44
168	20.87	14.96	19.69	23.23	2.56	22.84	13.98	5.71	1.54	1.97	19.45	7.26	23.07	18.11	15.75	7.62	23.92	1.66

Standard motor dimensions

Integral – foot mounted

Double and triple reduction

HB_2GH_
HB_3GH_

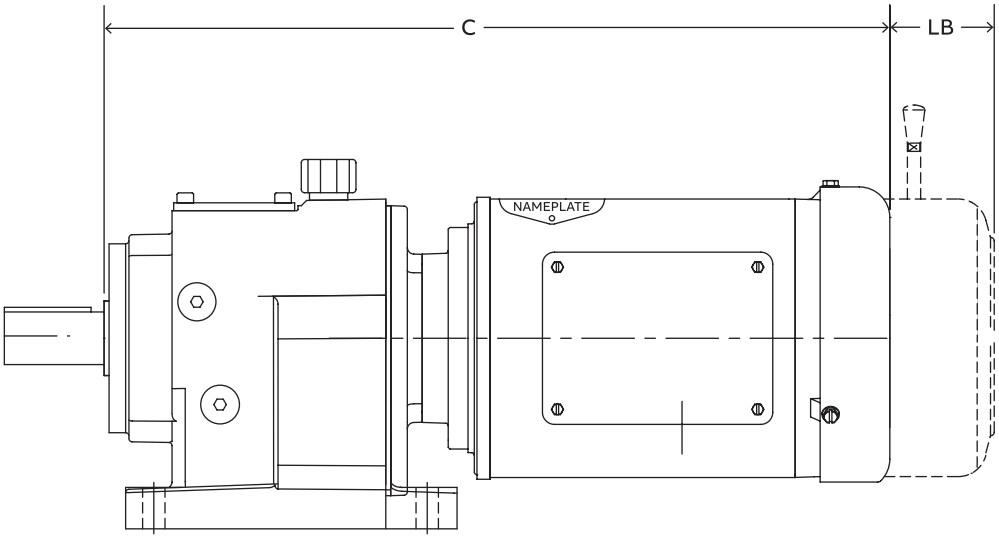

Standard integral motor dimensions 1/4 – 10 Hp

Reducer size	Reducer stage	71C4/71D4/71E4		80F4		80G4		90H4		90I4		100J4		112L4		132M4		132N4	
		C	LB	C	LB	C	LB	C	LB	C	LB	C	LB	C	LB	C	LB	C	LB
38	2	16.04	2.37	16.19	2.11	17.56	1.74	17.66	2.62	18.54	1.74	20.50	1.75	–	–	–	–	–	–
	3	16.63	2.37	16.78	2.11	18.15	1.74	18.25	2.62	–	–	–	–	–	–	–	–	–	–
48	2	17.11	2.37	17.26	2.11	18.63	1.74	18.73	2.62	19.61	1.74	21.57	1.75	23.33	2.51	–	–	–	–
	3	17.78	2.37	17.93	2.11	19.30	1.74	19.40	2.62	20.28	1.74	22.24	1.75	–	–	–	–	–	–
58	2	18.31	2.37	18.46	2.11	19.83	1.74	19.93	2.62	20.81	1.74	22.77	1.75	24.46	2.51	25.98	6.38	27.48	6.38
	3	19.04	2.37	19.19	2.11	20.56	1.74	20.66	2.62	21.54	1.74	23.50	1.75	–	–	–	–	–	–
68	2	18.31	2.37	18.46	2.11	19.83	1.74	19.93	2.62	20.81	1.74	22.77	1.75	24.46	2.51	25.98	6.38	27.48	6.38
	3	19.04	2.37	19.19	2.11	20.56	1.74	20.66	2.62	21.54	1.74	23.50	1.75	–	–	–	–	–	–
88	2	–	–	–	–	–	–	21.50	2.62	22.38	1.74	24.24	1.75	25.89	2.51	27.41	6.38	28.91	6.38
	3	20.86	2.37	21.01	2.11	22.38	1.74	22.48	2.62	23.36	1.74	25.32	1.75	27.03	2.51	28.51	6.38	30.01	6.38
108	2	–	–	–	–	–	–	–	–	–	–	–	–	27.29	2.51	28.77	6.38	30.27	6.38
	3	–	–	22.63	2.11	24.00	1.74	24.10	2.62	24.98	1.74	26.94	1.75	28.53	2.51	30.04	6.38	31.54	6.38
128	2	–	–	–	–	–	–	–	–	–	–	–	–	–	–	30.78	6.38	32.28	6.38
	3	–	–	–	–	–	–	26.25	2.62	27.13	1.74	29.09	1.75	30.64	2.51	32.12	6.38	33.62	6.38
148	2	–	–	–	–	–	–	–	–	–	–	–	–	–	–	31.98	6.38	33.48	6.38
	3	–	–	–	–	–	–	–	–	–	–	30.41	1.75	32.03	2.51	33.47	6.38	34.97	6.38
168	2	–	–	–	–	–	–	–	–	–	–	–	–	–	–	34.70	6.38	36.20	6.38
	3	–	–	–	–	–	–	–	–	–	–	–	–	–	–	36.31	6.38	37.81	6.38

Standard integral motor dimensions 15 – 40 Hp

Reducer size	Reducer stage	160P4	160P4	160Q4		180R4		180S4	200T4
		C	LB	C	LB	C	LB	C	C
88	2	31.27	7.02	31.27	7.02	–	–	–	–
	3	–	–	–	–	–	–	–	–
108	2	32.67	7.02	32.67	7.02	37.18	5.71	38.93	–
	3	33.83	7.02	–	–	–	–	–	–
128	2	34.45	7.02	34.45	7.02	39.08	5.71	40.83	42.33
	3	35.91	7.02	35.91	7.02	40.54	5.71	42.29	–
148	2	35.67	7.02	35.67	7.02	40.29	5.71	42.04	43.54
	3	37.16	7.02	37.16	7.02	41.79	5.71	43.54	45.04
168	2	38.39	7.02	38.39	7.02	43.01	5.71	44.76	46.26
	3	40.08	7.02	40.08	7.02	44.63	5.71	46.38	47.88

See page Eng-20 for additional integral gearmotor information.

Washdown motor dimensions

Integral – foot mounted

Double and triple reduction

HB_2GH_
HB_3GH_

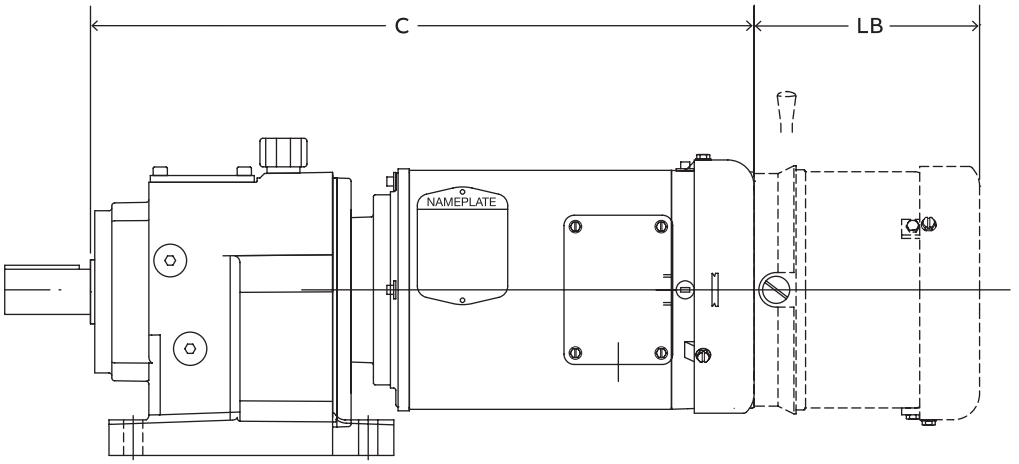

Washdown integral motor dimensions 1/2 – 10 Hp

Reducer size	Reducer stage	71E4		80F4		80G4		90H4		90I4		100J4		112L4		132M4		132N4	
		C	LB	C	LB	C	LB	C	LB	C	LB	C	LB	C	LB	C	LB	C	LB
38	2	16.66	4.81	16.56	4.81	17.56	3.81	17.66	5.26	18.54	5.26	21.89	6.24	–	–	–	–	–	–
	3	17.25	4.81	17.15	4.81	18.15	3.81	18.25	5.26	–	–	–	–	–	–	–	–	–	–
48	2	17.73	4.81	17.63	4.81	18.63	3.81	18.76	5.26	19.61	5.26	22.96	6.24	23.33	5.26	–	–	–	–
	3	18.40	4.81	18.30	4.81	19.30	3.81	19.40	5.26	20.28	5.26	23.63	6.24	–	–	–	–	–	–
58	2	18.18	4.81	18.08	4.81	19.08	3.81	19.18	5.26	20.06	5.26	23.30	6.24	23.66	5.26	25.36	8.44	26.86	8.94
	3	18.93	4.81	18.83	4.81	19.83	3.81	19.93	5.26	20.81	5.26	24.05	6.24	–	–	–	–	–	–
68	2	18.93	4.81	18.83	4.81	19.83	3.81	19.93	5.26	20.81	5.26	24.16	6.24	24.46	5.26	25.98	8.44	27.48	8.94
	3	19.66	4.81	19.56	4.81	20.56	3.81	20.66	5.26	21.54	5.26	24.89	6.24	–	–	–	–	–	–
88	2	–	–	–	–	–	–	21.50	5.26	22.38	5.26	25.63	6.24	25.89	5.26	27.41	8.44	28.91	8.94
	3	21.48	4.81	21.38	4.81	22.38	3.81	22.48	5.26	23.36	5.26	26.71	6.24	27.03	5.26	28.51	8.44	30.01	8.94
108	2	–	–	–	–	–	–	–	–	–	–	–	–	27.29	5.26	28.77	8.44	30.27	8.94
	3	–	–	23.00	4.81	24.00	3.81	24.10	5.26	24.98	5.26	28.33	6.24	28.53	5.26	30.04	8.44	31.54	8.94
128	2	–	–	–	–	–	–	–	–	–	–	–	–	–	–	30.78	8.44	32.28	8.94
	3	–	–	-	-	-	-	26.25	5.26	27.13	5.26	30.48	6.24	30.64	5.26	32.12	8.44	33.62	8.94
148	2	–	–	–	–	–	–	–	–	–	–	–	–	–	–	31.98	8.44	33.48	8.94
	3	–	–	–	–	–	–	–	–	–	–	31.80	6.24	32.03	5.26	33.47	8.44	34.97	8.94
168	2	–	–	–	–	–	–	–	–	–	–	–	–	–	–	34.70	8.44	36.20	8.94
	3	–	–	–	–	–	–	–	–	–	–	–	–	–	–	36.31	8.44	37.81	8.94

See page Eng-20 for additional integral gearmotor information.

Output shaft dimensions

Integral – foot mounted

Four- and five-stage reduction

HB_4GH_
HB_5GH_

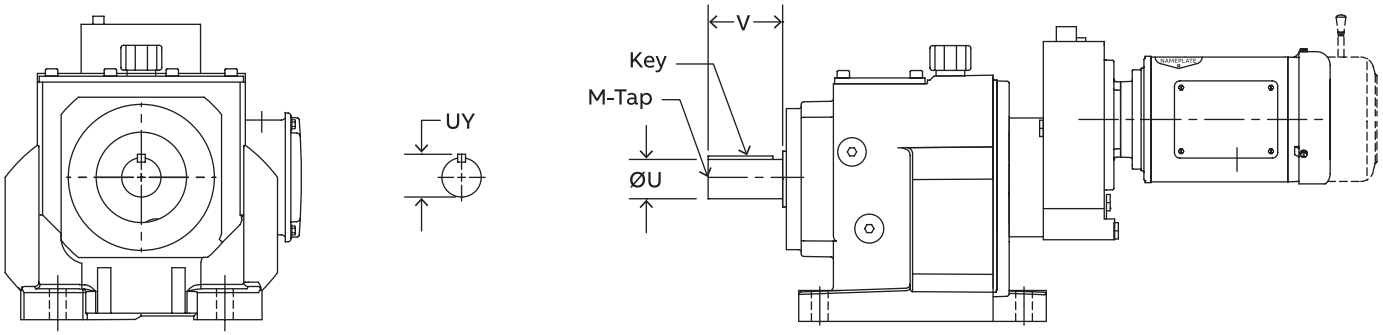

4 Stage reduction

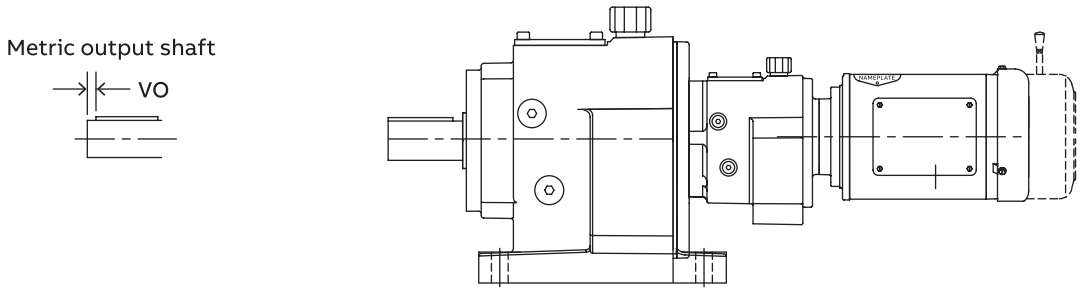

5 Stage reduction

	Standard inch output shaft						Standard metric output shaft						
	Ø U	Tol.	UY	V	Key	M-Tap	Ø U	Tol.	UY	V	Vo	Key	M-Tap
38	1.000	+0.0000 -0.0005	1.11	1.97	1/4 x 1/4 x 1-5/8	3/8-16 UNC x 0.87	25	+0.015 +0.002	28	50	7	8 x 7 x 40	M10 x 22
48	1.250	+0.0000 -0.0005	1.36	2.36	1/4 x 1/4 x 2	3/8-16 UNC x 0.87	30	+0.015 +0.002	33	60	7	8 x 7 x 50	M10 x 22
68	1.625	+0.0000 -0.0010	1.79	3.15	3/8 x 3/8 x 2-5/8	5/8-11 UNC x 1.42	40	+0.018 +0.002	43	90	5	12 x 8 x 70	M10 x 36
88	2.125	+0.0000 -0.0010	2.35	3.94	1/2 x 1/2 x 3-1/4	3/4-10 x UNC x 1.65	50	+0.018 +0.002	54	100	10	14 x 9 x 80	M16 X 36
108	2.375	+0.0000 -0.0010	2.65	4.72	5/8 x 5/8 x 3-15/16	3/4-10 x UNC x 1.65	60	+0.030 +0.011	64	120	10	18 x 11 x 100	M20 x 42
128	2.875	+0.0000 -0.0010	3.20	5.51	3/4 x 3/4 x 4-1/2	3/4-10 x UNC x 1.65	70	+0.030 +0.011	75	140	15	20 x 12 x 110	M20 x 42
148	3.625	+0.0000 -0.0010	4.01	6.69	7/8 x 7/8 x 5-5/8	1-8 UNC x 1.97	90	+0.035 +0.013	95	170	15	25 x 14 x 140	M24 x 50
168	4.000	+0.0000 -0.0010	4.44	8.27	1 x 1 x 7-1/8	1-8 UNC x 1.97	100	+0.035 +0.013	106	210	15	28 x 16 x 180	M24 x 50

Optional output shaft page ILH-227

Gearcase dimensions

Integral – foot mounted

Four- and five-stage reduction

HB_4GH_
HB_5GH_

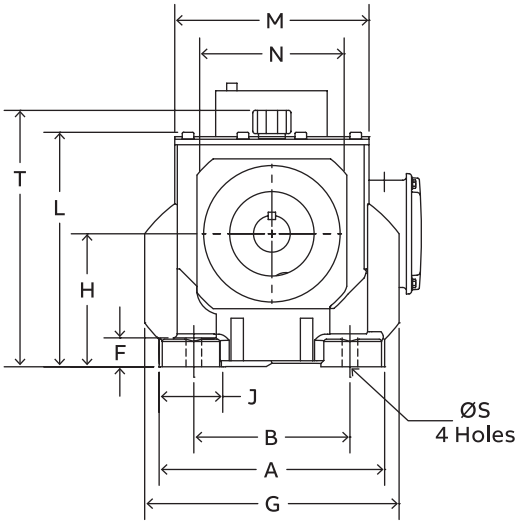

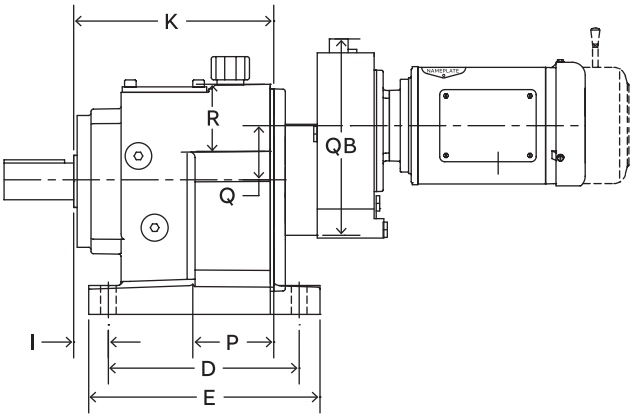

4 Stage Reduction

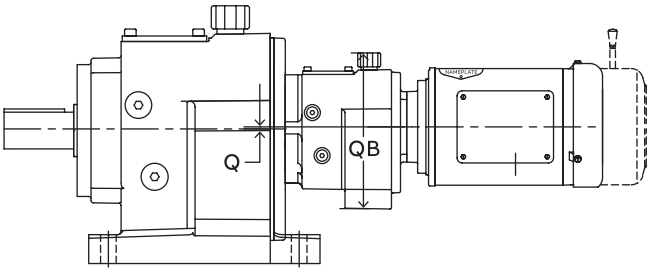

5 Stage Reduction

	Mounting dimensions										Outline dimensions							4 stage		5 stage	
	A	B	D	E	F	G	H	J	ØS	I	K	P	L	M	N	R	T	Q	QB	Q	QB
38	5.77	4.33	5.12	6.30	0.79	6.42	3.54	1.33	0.39	0.98	5.51	2.33	6.21	5.07	3.77	1.83	–	1.93	7.83	0	6.29
48	7.68	5.32	6.50	7.87	0.98	8.66	4.53	2.17	0.53	1.18	6.81	2.76	7.98	6.61	4.92	2.28	8.73	1.93	7.83	0	6.29
68	9.25	6.69	8.07	9.65	1.18	10.35	5.51	2.36	0.69	1.38	8.23	3.27	9.65	8.41	6.32	3.03	10.58	1.93	7.83	0	6.29
88	11.42	8.47	10.24	12.21	1.77	13.07	7.09	2.95	0.69	1.58	10.47	4.26	12.21	10.24	7.87	3.70	13.17	2.54	9.84	0	8.86
108	13.39	9.84	12.21	14.37	1.97	16.14	8.86	3.58	0.87	1.56	12.24	4.94	15.32	12.05	9.85	4.24	16.20	2.54	9.84	0	8.86
128	15.75	11.42	14.57	17.32	2.17	18.19	9.84	4.33	1.02	1.77	14.72	5.63	17.13	14.33	11.82	4.89	18.08	3.07	11.57	0	8.86
148	17.72	13.39	16.14	19.29	2.36	20.07	12.40	4.34	1.30	1.97	16.18	6.30	19.71	16.38	11.82	6.24	20.55	1.63	11.57	1.44	8.86
168	20.87	14.96	19.69	23.23	2.56	22.84	13.98	5.71	1.54	1.97	19.45	7.26	23.07	18.11	15.75	7.62	23.92	1.41	11.57	1.66	10.68

Standard motor dimensions

Integral – foot mounted

Four- and five-stage reduction

HB_4GH_
HB_5GH_

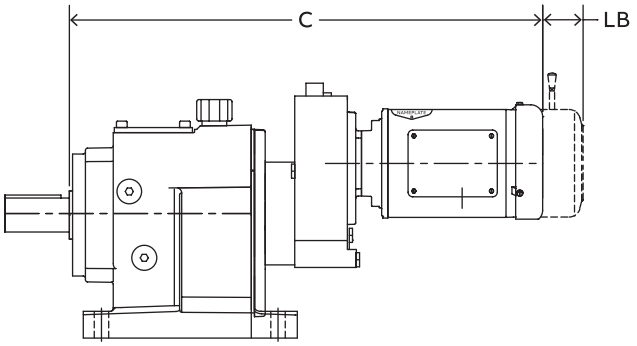

4 Stage reduction

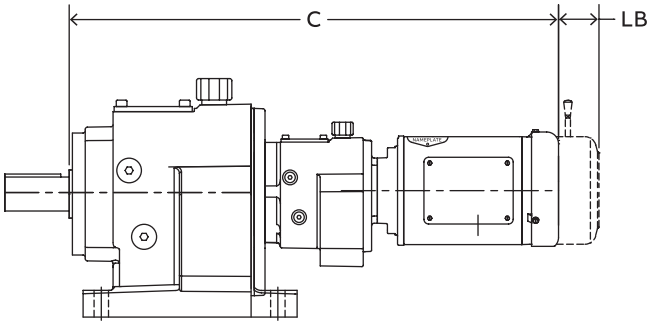

5 Stage reduction

Standard integral motor dimensions 1/4 – 10 Hp

Reducer size	Reducer stage	71C4/71D4/71E4		80F4		80G4		90H4		90I4		100J4		112L4		132M4		132N4	
		C	LB	C	LB	C	LB	C	LB	C	LB	C	LB	C	LB	C	LB	C	LB
38	4	21.00	2.37	–	–	–	–	–	–	–	–	–	–	–	–	–	–	–	–
	5	22.19	2.37	–	–	–	–	–	–	–	–	–	–	–	–	–	–	–	–
48	4	22.08	2.37	22.23	2.11	–	–	–	–	–	–	–	–	–	–	–	–	–	–
	5	23.26	2.37	–	–	–	–	–	–	–	–	–	–	–	–	–	–	–	–
68	4	23.52	2.37	23.67	2.11	–	–	–	–	–	–	–	–	–	–	–	–	–	–
	5	24.70	2.37	–	–	–	–	–	–	–	–	–	–	–	–	–	–	–	–
88	4	25.79	2.37	25.94	2.11	27.31	1.74	27.41	2.62	–	–	–	–	–	–	–	–	–	–
	5	27.99	2.37	–	–	–	–	–	–	–	–	–	–	–	–	–	–	–	–
108	4	27.64	2.37	27.79	2.11	29.16	1.74	29.26	2.62	30.14	1.74	32.10	1.75	33.86	2.51	–	–	–	–
	5	29.21	2.37	–	–	–	–	–	–	–	–	–	–	–	–	–	–	–	–
128	4	30.36	2.37	30.51	2.11	31.88	1.74	31.98	2.62	32.86	1.74	34.82	1.75	36.51	2.51	–	–	–	–
	5	31.47	2.37	–	–	–	–	–	–	–	–	–	–	–	–	–	–	–	–
148	4	31.67	2.37	31.82	2.11	33.19	1.74	33.29	2.62	34.17	1.74	36.13	1.75	37.82	2.51	39.34	6.38	–	–
	5	32.78	2.37	32.93	2.11	–	–	–	–	–	–	–	–	–	–	–	–	–	–
168	4	35.49	2.37	35.64	2.11	37.01	1.74	37.11	2.62	37.99	1.74	39.95	1.75	41.64	2.51	43.16	6.38	–	–
	5	37.98	2.37	38.13	2.11	39.50	1.74	39.60	2.62	–	–	–	–	–	–	–	–	–	–

See page Eng-20 for additional integral gearmotor information.

Washdown motor dimensions

Integral – foot mounted

Four- and five-stage reduction

HB_4GH_
HB_5GH_

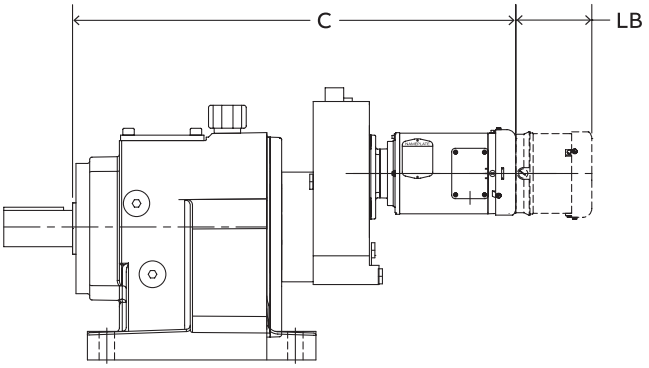

4 Stage reduction

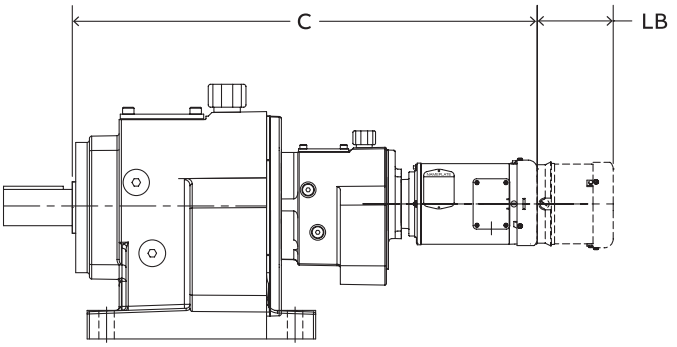

5 Stage reduction

Washdown integral motor dimensions 1/2 – 10 Hp

Reducer size	Reducer stage	71E4		80F4		80G4		90H4		90I4		100J4		112L4		132M4		132N4	
		C	LB	C	LB	C	LB	C	LB	C	LB	C	LB	C	LB	C	LB	C	LB
38	4	21.62	4.81	–	–	–	–	–	–	–	–	–	–	–	–	–	–	–	–
	5	22.81	4.81	–	–	–	–	–	–	–	–	–	–	–	–	–	–	–	–
48	4	22.70	4.81	22.60	4.81	–	–	–	–	–	–	–	–	–	–	–	–	–	–
	5	23.77	4.81	–	–	–	–	–	–	–	–	–	–	–	–	–	–	–	–
68	4	24.14	4.81	24.04	4.81	–	–	–	–	–	–	–	–	–	–	–	–	–	–
	5	25.32	4.81	–	–	–	–	–	–	–	–	–	–	–	–	–	–	–	–
88	4	26.41	4.81	26.31	4.81	27.31	3.81	27.41	5.26	–	–	–	–	–	–	–	–	–	–
	5	28.61	4.81	–	–	–	–	–	–	–	–	–	–	–	–	–	–	–	–
108	4	28.26	4.81	28.16	4.81	29.16	3.81	29.26	5.26	30.14	5.26	33.49	6.24	33.86	5.26	–	–	–	–
	5	29.83	4.81	29.73	4.81	–	–	–	–	–	–	–	–	–	–	–	–	–	–
128	4	30.98	4.81	30.88	4.81	31.88	3.81	31.98	5.26	32.86	5.26	36.21	6.24	36.51	5.26	–	–	–	–
	5	32.09	4.81	–	–	–	–	–	–	–	–	–	–	–	–	–	–	–	–
148	4	32.29	4.81	32.19	4.81	33.19	3.81	33.29	5.26	34.17	5.26	37.52	6.24	37.82	5.26	39.34	8.44	–	–
	5	33.40	4.81	33.30	4.81	–	–	–	–	–	–	–	–	–	–	–	–	–	–
168	4	36.11	4.81	36.01	4.81	37.01	3.81	37.11	5.26	37.99	5.26	41.34	6.24	41.64	5.26	43.16	8.44	–	–
	5	38.60	4.81	38.50	4.81	39.50	3.81	39.60	5.26	–	–	–	–	–	–	–	–	–	–

See page Eng-20 for additional integral gearmotor information.

Output shaft dimensions

HF_1GH_

Integral – flange mounted
Single reduction

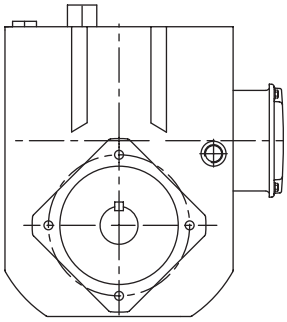

B14 Output flange

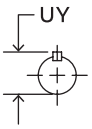

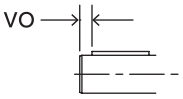

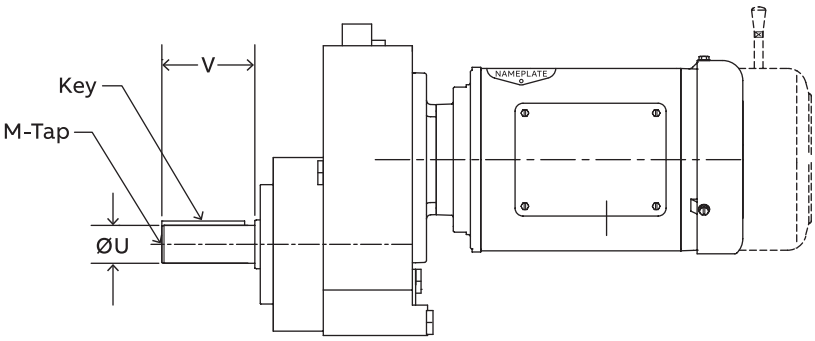

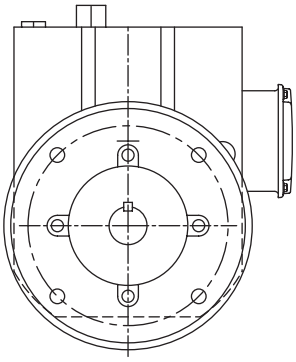

B5/NEMA Output flange

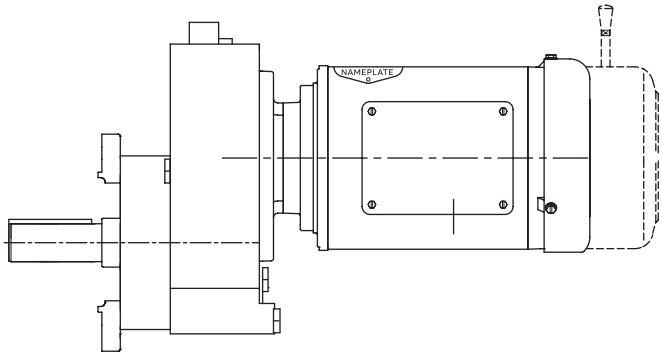

	Standard inch output shaft						Standard metric output shaft						
	Ø U	Tol.	UY	V	Key	M-Tap	Ø U	Tol.	UY	V	Vo	Key	M-Tap
38	0.875	+0.000 -0.001	0.95	2.24	3/16 x 3/16 x 1.50	5/16-18 UNC	20	+0.015 +0.002	22.5	40	5	6 x 6 x 30	M6 x 16
48	1.125	+0.000 -0.001	1.23	2.74	1/4 x 1/4 x 2.35	3/8-16 UNC	25	+0.015 +0.002	28	50	7	8 x 7 x 40	M10 x 22
68	1.375	+0.000 -0.001	1.51	3.37	5/16 x 5/16 x 3.00	3/8-16 UNC	30	+0.015 +0.002	33	60	7	8 x 7 x 50	M10 x 36
88	1.625	+0.000 -0.001	1.79	3.15	3/8 x 3/8 x 2.75	5/8-11 UNC	40	+0.018 +0.002	43	80	5	12 X 8 X 70	M16 x 36

Gearcase dimensions

Integral – flange mounted
Single reduction

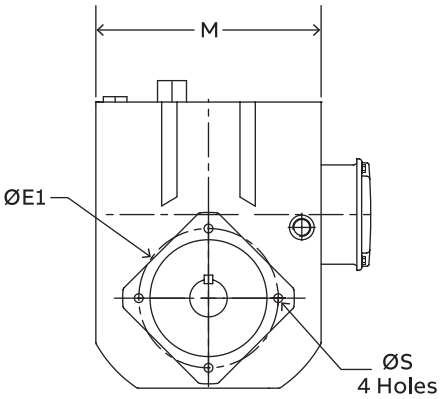

B14 Output flange

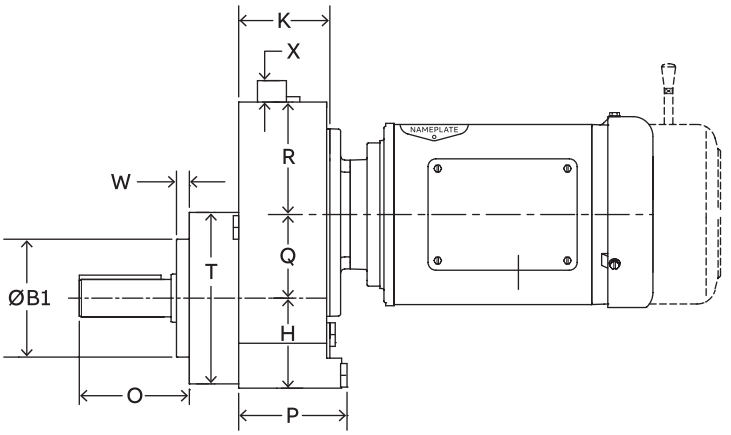

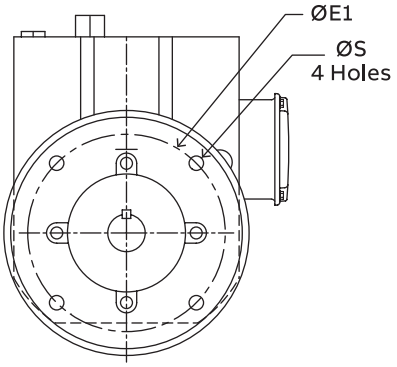

B5/NEMA Output flange

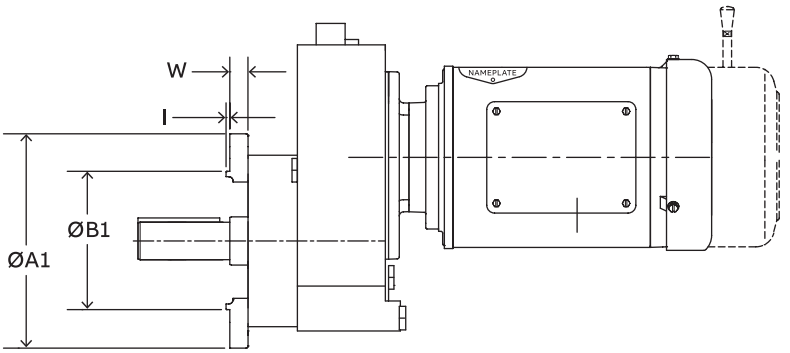

	Mounting dimensions					Outline dimensions							
	Ø B1	Ø E1	Ø S	W	O	H	K	P	M	R	T	Q	X
38	3.1496	3.937	M8 x 1.25	0.35	2.75	2.4	2.4	2.3	5.1	2.6	4.8	1.93	0.9
48	3.1496	3.937	M8 x 1.25	0.35	3.25	3.0	2.6	3.2	6.7	3.4	4.8	2.54	0.9
68	4.3307	5.118	M10 x 1.5	0.45	4.04	3.4	3.4	4.0	8.3	4.2	6.3	3.07	0.9
88	5.1181	6.496	M12 x 1.75	0.41	3.86	4.2	3.9	4.4	10.3	5.2	7.5	3.90	0.9

	Standard B5 flange dimensions							Optional B5 flange dimensions							NEMA flange dimensions						
	Ø A1	Ø B1	Ø E1	Ø S	I	W	O	Ø A1	Ø B1	Ø E1	Ø S	I	W	O	Ø A1	Ø B1	Ø E1	Ø S	I	W	O
38	6.3	4.3307	5.118	0.35	0.14	0.4	2.24	7.9	5.1181	6.496	0.43	0.14	0.5	2.24	6.5	4.500	5.875	0.41	0.15	0.7	2.12
48	6.3	4.3307	5.118	0.35	0.14	0.4	2.74	7.9	5.1181	6.496	0.43	0.14	0.5	2.74	9.0	8.500	7.250	0.53	0.26	0.4	2.88
68	7.9	5.1181	6.496	0.43	0.14	0.5	3.37	9.9	7.0866	8.465	0.53	0.16	0.6	3.37	9.0	8.500	7.250	0.53	0.26	0.7	3.38
88	9.9	7.0866	8.465	0.53	0.16	0.6	3.15	11.9	9.0551	10.433	0.53	0.16	0.7	3.15	–	–	–	–	–	–	–

Standard motor dimensions

HF_1GH_

Integral – flange mounted
Single reduction

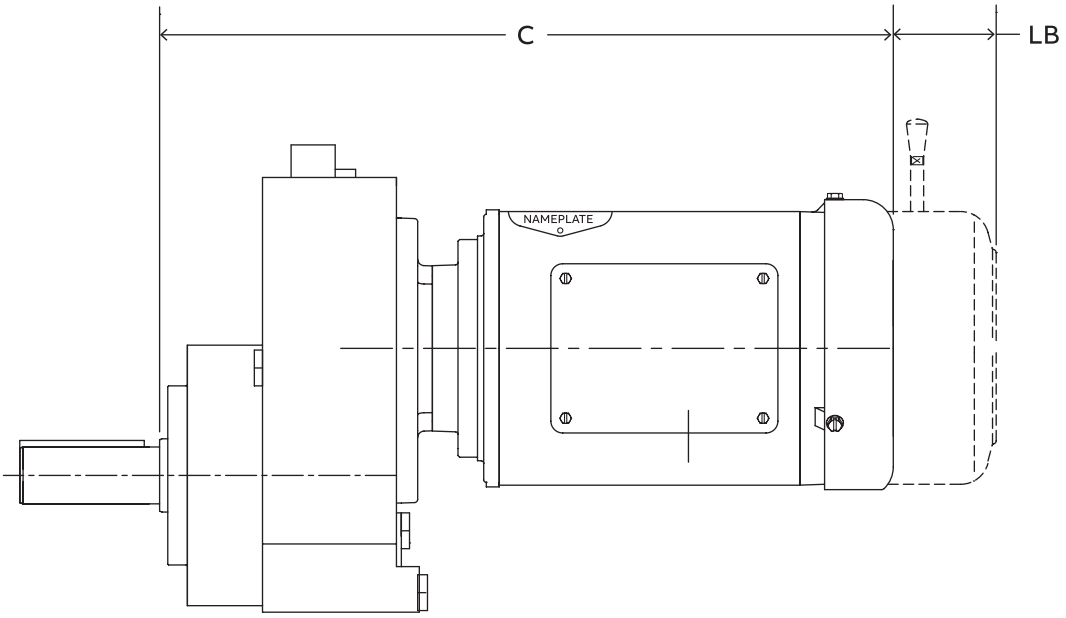

Standard integral motor dimensions 1/4 – 10 Hp

Reducer size	Reducer stage	71C4/71D4/71E4		80F4		80G4		90H4		90I4		100J4		112L4		132M4		132N4	
		C	LB	C	LB	C	LB	C	LB	C	LB	C	LB	C	LB	C	LB	C	LB
38	1	14.94	2.37	15.09	2.11	16.46	1.74	16.56	2.62	17.44	1.74	19.40	1.75	–	–	–	–	–	–
48	1	14.61	2.37	14.76	2.11	16.13	1.74	16.23	2.62	17.11	1.74	19.07	1.75	20.83	2.51	–	–	–	–
68	1	15.87	2.37	16.02	2.11	17.39	1.74	17.49	2.62	18.37	1.74	20.33	1.75	22.02	2.51	23.54	6.38	25.04	6.38
88	1	–	–	–	–	–	–	17.43	2.62	18.31	1.74	20.17	1.75	21.82	2.51	23.34	6.38	24.84	6.38

See page Eng-20 for additional integral gearmotor information.

Washdown motor dimensions

Integral – flange mounted
Single reduction

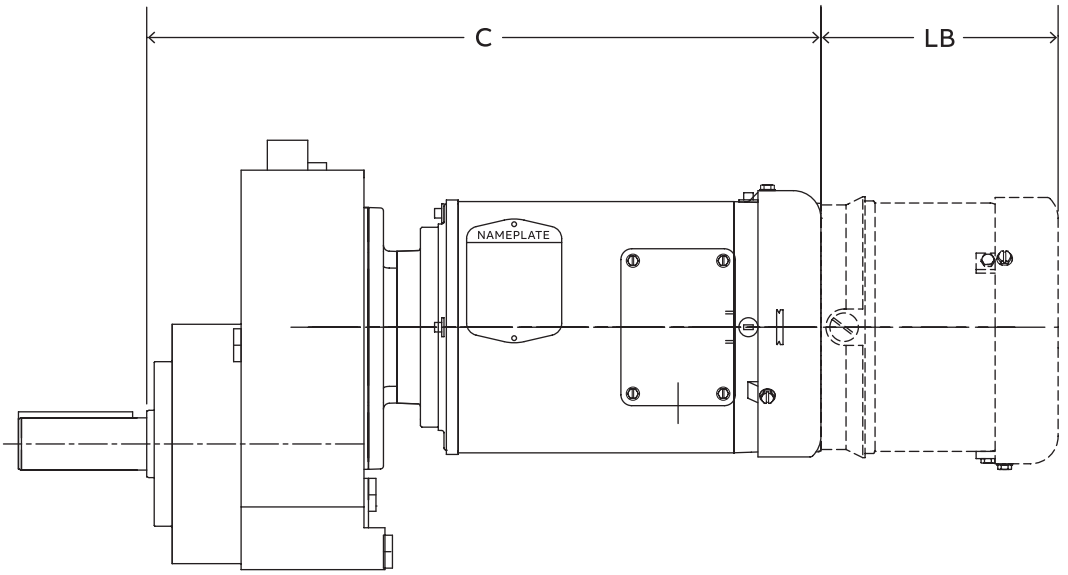

Washdown integral motor dimensions 1/2 – 10 Hp

Reducer size	Reducer stage	71E4		80F4		80G4		90H4		90I4		100J4		112L4		132M4		132N4	
		C	LB	C	LB	C	LB	C	LB	C	LB	C	LB	C	LB	C	LB	C	LB
38	1	15.56	4.81	15.46	4.81	16.46	3.81	16.56	5.26	17.44	5.26	20.79	6.24	–	–	–	–	–	–
48	1	15.23	4.81	15.13	4.81	16.13	3.81	16.23	5.26	17.11	5.26	20.46	6.24	20.83	5.26	–	–	–	–
68	1	16.49	4.81	16.39	4.81	17.39	3.81	17.49	5.26	18.37	5.26	21.72	6.24	22.02	5.26	23.54	8.44	25.04	8.94
88	1	–	–	–	–	–	–	17.43	5.26	18.31	5.26	21.56	6.24	21.82	5.26	23.34	8.44	24.84	8.94

See page Eng-20 for additional integral gearmotor information.

Output shaft dimensions

Integral – flange mounted
Double and triple reduction

HF_2GH_
HF_3GH_

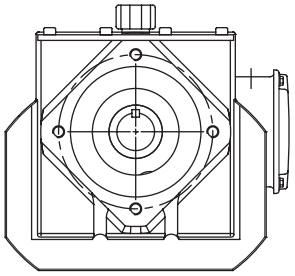

B14 Output flange

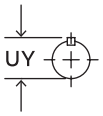

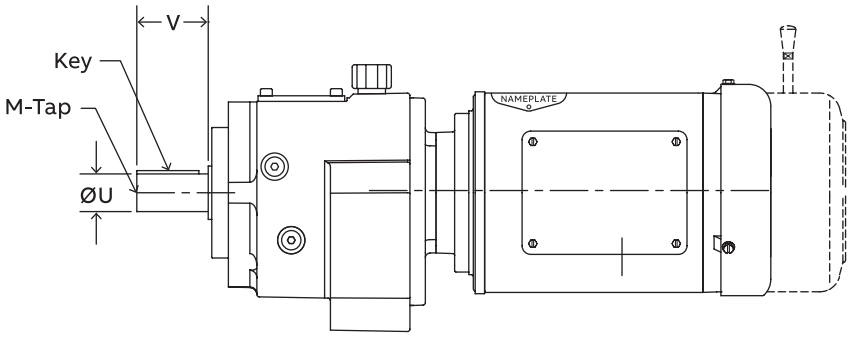

Metric output shaft

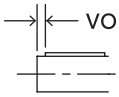

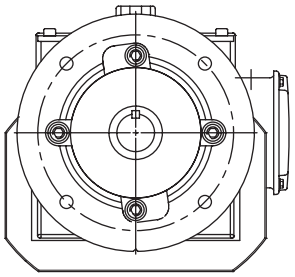

B5 Output flange

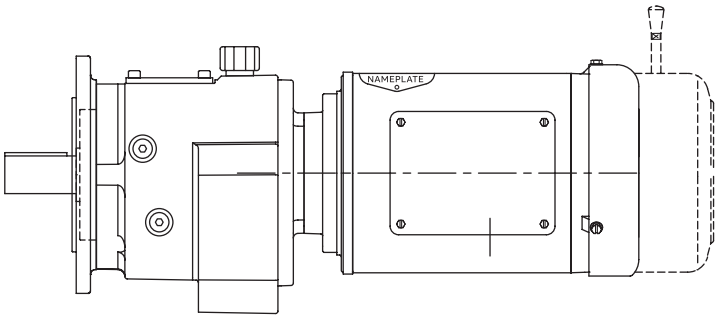

	Standard inch output shaft						Standard metric output shaft						
	Ø U	Tol.	UY	V	Key	M-Tap	Ø U	Tol.	UY	V	Vo	Key	M-Tap
38	1.000	+0.0000 -0.0005	1.11	1.97	1/4 x 1/4 x 1-5/8	3/8-16 UNC X 0.87	25	+0.015 +0.002	28	50	7	8 x 7 x 40	M10 x 22
48	1.250	+0.0000 -0.0005	1.36	2.36	1/4 x 1/4 x 2	3/8-16 UNC X 0.87	30	+0.015 +0.002	33	60	7	8 x 7 x 50	M10 x 22
58	1.375	+0.0000 -0.0005	1.49	2.76	5/16 x5/16 x 2-1/8	1/2-13 UNC X 1.12	35	+0.014 +0.002	38	70	7	10 X 8 X 56	M12 x28
68	1.625	+0.0000 -0.0010	1.79	3.15	3/8 x 3/8 x 2-5/8	5/8-11 UNC X 1.42	40	+0.018 +0.002	43	90	5	12 X 8 X 70	M16 x 36
88	2.125	+0.0000 -0.0010	2.35	3.94	1/2 x 1/2 x 3-1/4	3/4-10 UNC X 1.65	50	+0.018 +0.002	54	100	10	14 X 9 X 80	M16 x 36
108	2.375	+0.0000 -0.0010	2.65	4.72	5/8 x 5/8 x 3-15/16	3/4-10 UNC X 1.65	60	+0.030 +0.011	64	120	10	18 x 11 x 100	M20 x 42
128	2.875	+0.0000 -0.0010	3.20	5.51	3/4 x 3/4 x 4-1/2	3/4-10 UNC X 1.65	70	+0.030 +0.011	75	140	15	20 x 12 x 110	M20 x 42
148	3.625	+0.0000 -0.0010	4.01	6.69	7/8 x 7/8 x 5-5/8	1-8 UNC X 1.97	90	+0.035 +0.013	95	170	15	25 x 14 x 140	M24 x 50
168	4.000	+0.0000 -0.0010	4.44	8.27	1 x 1 x 7-1/8	1-8 UNC X 1.97	100	+0.035 +0.013	106	210	15	28 x 16 x 180	M24 x 50

Optional output shaft page ILH-227

Gearcase dimensions

Integral – flange mounted
Double and triple reduction

HF_2GH_
HF_3GH_

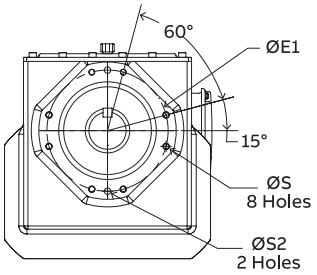

B14 Output flange
Sizes 108-168

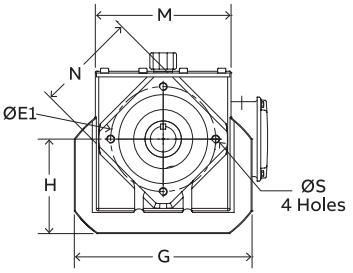

B14 Output flange
Sizes 38-88

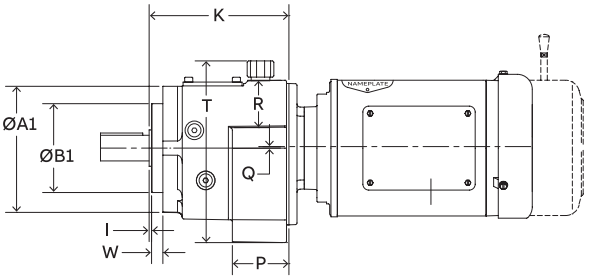

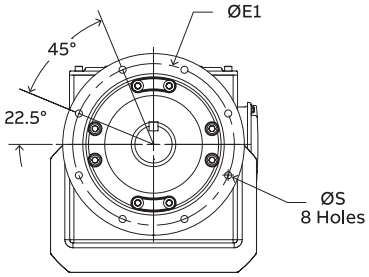

B5 Output flange
Sizes 128-168

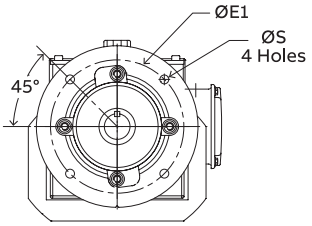

B5 Output flange
Sizes 38-108

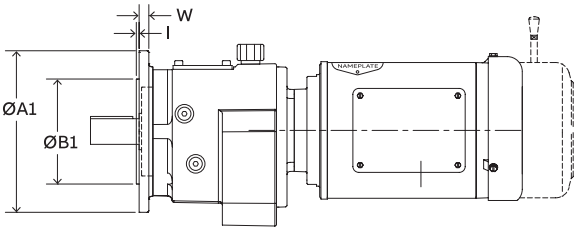

	Mounting dimensions						Outline dimensions								
	Ø A1	Ø B1	Ø E1	Ø S	Ø S2	W	H	G	K	P	M	N	R	T	Q
38	4.72	3.1497	3.94	M8 x 0.43	–	0.39	3.62	6.45	5.51	2.32	5.07	3.96	1.83	6.29	0
48	6.30	4.3308	5.12	M10 x 0.63	–	0.47	4.61	8.66	6.81	2.76	6.61	4.91	2.31	8.86	0
58	6.30	4.3308	5.12	M10 x 0.63	–	0.47	5.18	9.64	7.58	3.03	7.36	4.92	2.45	9.79	0
68	7.48	5.1182	6.50	M12 x 0.67	–	0.55	5.67	10.39	8.23	3.27	8.14	6.10	2.97	10.68	0
88	9.65	7.0867	8.47	M16 x 0.87	–	0.71	7.17	13.07	10.47	4.25	10.23	7.73	3.62	13.22	0
108	11.82	7.8741	9.84	M16 x 1.10	0.47	0.91	8.70	16.14	12.24	4.94	12.84	9.91	4.64	16.42	0
128	13.40	9.4489	11.81	M16 x 0.87	0.63	1.10	9.84	18.19	14.72	5.63	14.33	11.92	5.04	18.27	0
148	13.39	9.4489	11.81	M16 x 0.87	0.63	1.06	12.48	20.08	16.18	6.30	16.38	11.87	6.48	20.95	1.44
168	15.76	11.8110	13.78	M20 x 1.34	0.63	1.38	14.09	22.84	19.45	7.26	18.50	11.80	8.46	24.82	1.66

	Standard B5 flange dimensions						Optional B5 flange dimensions					
	Ø A1	Ø B1	Ø E1	Ø S	I	W	Ø A1	Ø B1	Ø E1	Ø S	I	W
38	6.30	4.3308	5.12	0.35	0.14	0.39	7.87	5.1182	6.50	0.43	0.14	0.47
48	7.87	5.1182	6.50	0.43	0.14	0.47	9.84	7.0867	8.47	0.53	0.16	0.59
58	7.87	5.1182	6.50	0.43	0.14	0.47	9.84	7.0867	8.47	0.53	0.16	0.59
68	9.84	7.0867	8.47	0.53	0.16	0.59	11.81	9.0552	10.43	0.53	0.16	0.63
88	11.81	9.0551	10.43	0.53	0.16	0.63	13.78	9.8419	11.81	0.69	0.20	0.71
108	13.77	9.8419	11.81	0.69	0.20	0.71	17.72	13.7788	15.75	0.69	0.20	0.79
128	13.77	9.8419	11.81	0.69	0.20	0.78	17.72	13.7788	15.75	0.69	0.20	0.87
148	17.72	13.7788	15.75	0.69	0.20	0.87	21.64	17.7157	19.69	0.69	0.20	0.98
168	17.72	13.7788	15.75	0.69	0.20	1.22	21.65	17.7157	19.69	0.69	0.20	1.22

Standard motor dimensions

Integral – flange mounted

Double and triple reduction

HF_2GH_
HF_3GH_

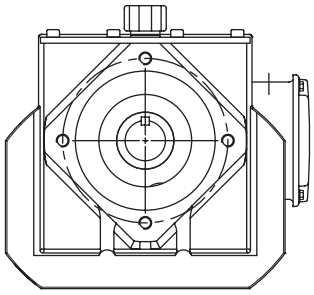

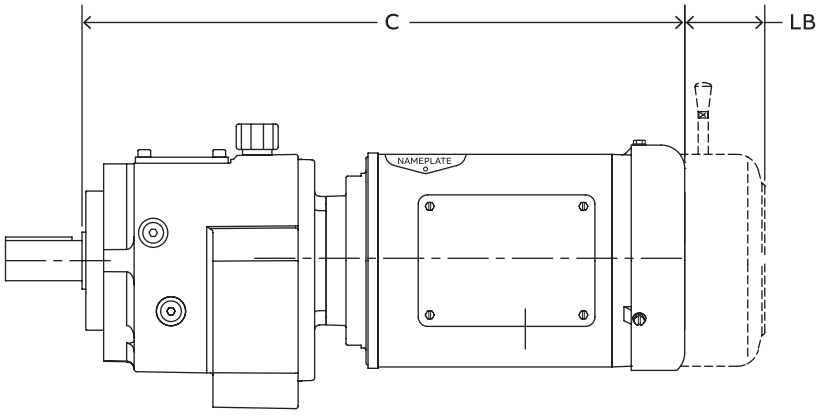

Standard integral motor dimensions 1/4 – 10 Hp

Reducer size	Reducer stage	71C4/71D4/71E4		80F4		80G4		90H4		90I4		100J4		112L4		132M4		132N4	
		C	LB	C	LB	C	LB	C	LB	C	LB	C	LB	C	LB	C	LB	C	LB
38	2	16.04	2.37	16.19	2.11	17.56	1.74	17.66	2.62	18.54	1.74	20.50	1.75	–	–	–	–	–	–
	3	16.63	2.37	16.78	2.11	18.15	1.74	18.25	2.62	–	–	–	–	–	–	–	–	–	–
48	2	17.11	2.37	17.26	2.11	18.63	1.74	18.73	2.62	19.61	1.74	21.57	1.75	23.33	2.51	–	–	–	–
	3	17.78	2.37	17.93	2.11	19.30	1.74	19.40	2.62	20.28	1.74	22.24	1.75	–	–	–	–	–	–
58	2	17.56	2.37	17.71	2.21	19.08	1.61	19.18	2.62	20.06	1.74	21.91	1.75	23.66	2.50	25.36	6.38	26.86	6.38
	3	18.31	2.37	18.46	2.21	19.83	1.61	19.93	2.62	20.81	1.74	22.26	1.75	–	–	–	–	–	–
68	2	18.31	2.37	18.46	2.11	19.83	1.74	19.93	2.62	20.81	1.74	22.77	1.75	24.46	2.51	25.98	6.38	27.48	6.38
	3	19.04	2.37	19.19	2.11	20.56	1.74	20.66	2.62	21.54	1.74	23.50	1.75	–	–	–	–	–	–
88	2	–	–	–	–	–	–	21.50	2.62	22.38	1.74	24.24	1.75	25.89	2.51	27.41	6.38	28.91	6.38
	3	20.86	2.37	21.01	2.11	22.38	1.74	22.48	2.62	23.36	1.74	25.32	1.75	27.03	2.51	28.51	6.38	30.01	6.38
108	2	–	–	–	–	–	–	–	–	–	–	–	–	27.29	2.51	28.77	6.38	30.27	6.38
	3	–	–	22.63	2.11	24.00	1.74	24.10	2.62	24.98	1.74	26.94	1.75	28.53	2.51	30.04	6.38	31.54	6.38
128	2	–	–	–	–	–	–	–	–	–	–	–	–	–	–	30.78	6.38	32.28	6.38
	3	–	–	–	–	–	–	26.25	2.62	27.13	1.74	29.09	1.75	30.64	2.51	32.12	6.38	33.62	6.38
148	2	–	–	–	–	–	–	–	–	–	–	–	–	–	–	31.98	6.38	33.48	6.38
	3	–	–	–	–	–	–	–	–	–	–	30.41	1.75	32.03	2.51	33.47	6.38	34.97	6.38
168	2	–	–	–	–	–	–	–	–	–	–	–	–	–	–	34.70	6.38	36.20	6.38
	3	–	–	–	–	–	–	–	–	–	–	–	–	–	–	36.31	6.38	37.81	6.38

Standard integral motor dimensions 15 – 40 Hp

Reducer size	Reducer stage	160P4		160Q4		180R4		180S4	200T4
		C	LB	C	LB	C	LB	C	LB
88	2	31.27	7.02	31.27	7.02	–	–	–	–
	3	–	–	–	–	–	–	–	–
108	2	32.67	7.02	32.67	7.02	37.18	5.71	38.93	–
	3	33.83	7.02	–	–	–	–	–	–
128	2	34.45	7.02	34.45	7.02	39.08	5.71	40.83	42.33
	3	35.91	7.02	35.91	7.02	40.54	5.71	42.29	–
148	2	35.67	7.02	35.67	7.02	40.29	5.71	42.04	43.54
	3	37.16	7.02	37.16	7.02	41.79	5.71	43.54	45.04
168	2	38.39	7.02	38.39	7.02	43.01	5.71	44.76	46.26
	3	40.08	7.02	40.08	7.02	44.63	5.71	46.38	47.88

See page Eng-20 for additional integral gearmotor information.

Washdown motor dimensions

Integral – flange mounted
Double and triple reduction

HF_2GH_
HF_3GH_

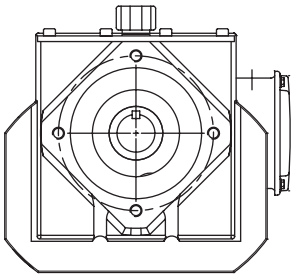

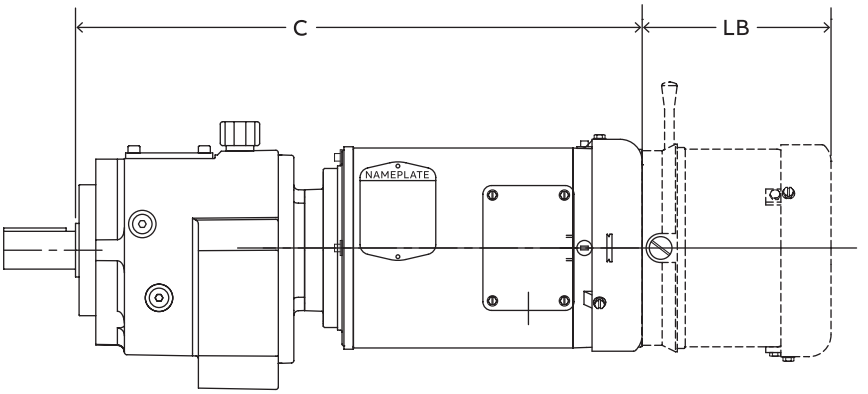

Washdown integral motor dimensions 1/2 – 10 Hp

Reducer size	Reducer stage	71E4		80F4		80G4		90H4		90I4		100J4		112L4		132M4		132N4	
		C	LB	C	LB	C	LB	C	LB	C	LB	C	LB	C	LB	C	LB	C	LB
38	2	16.66	4.81	16.56	4.81	17.56	3.81	17.66	5.26	18.54	5.26	21.89	6.24	–	–	–	–	–	–
	3	17.25	4.81	17.15	4.81	18.15	3.81	18.25	5.26	–	–	–	–	–	–	–	–	–	–
48	2	17.73	4.81	17.63	4.81	18.63	3.81	18.76	5.26	19.61	5.26	22.96	6.24	23.33	5.26	–	–	–	–
	3	18.40	4.81	18.30	4.81	19.30	3.81	19.40	5.26	20.28	5.26	23.63	6.24	–	–	–	–	–	–
58	2	18.18	4.81	18.08	4.81	19.08	3.81	19.18	5.26	20.06	5.26	23.30	6.24	25.36	5.26	25.36	8.44	26.86	8.94
	3	18.93	4.81	18.83	4.81	19.83	3.81	19.93	5.26	20.81	5.26	24.05	6.24	–	–	–	–	–	–
68	2	18.93	4.81	18.83	4.81	19.83	3.81	19.93	5.26	20.81	5.26	24.16	6.24	24.46	5.26	25.98	8.44	27.48	8.94
	3	19.66	4.81	19.56	4.81	20.56	3.81	20.66	5.26	21.54	5.26	24.89	6.24	–	–	–	–	–	–
88	2	–	–	–	–	–	–	21.50	5.26	22.38	5.26	25.63	6.24	25.89	5.26	27.41	8.44	28.91	8.94
	3	21.48	4.81	21.38	4.81	22.38	3.81	22.48	5.26	23.36	5.26	26.71	6.24	27.03	5.26	28.51	8.44	30.01	8.94
108	2	–	–	–	–	–	–	–	–	–	–	–	–	27.29	5.26	28.77	8.44	30.27	8.94
	3	–	–	23.00	4.81	24.00	3.81	24.10	5.26	24.98	5.26	28.33	6.24	28.53	5.26	30.04	8.44	31.54	8.94
128	2	–	–	–	–	–	–	–	–	–	–	–	–	–	–	30.78	8.44	32.28	8.94
	3	–	–	–	–	–	–	26.25	5.26	27.13	5.26	30.48	6.24	30.64	5.26	32.12	8.44	33.62	8.94
148	2	–	–	–	–	–	–	–	–	–	–	–	–	–	–	31.98	8.44	33.48	8.94
	3	–	–	–	–	–	–	–	–	–	–	31.80	6.24	32.03	5.26	33.47	8.44	34.97	8.94
168	2	–	–	–	–	–	–	–	–	–	–	–	–	–	–	34.70	8.44	36.20	8.94
	3	–	–	–	–	–	–	–	–	–	–	–	–	–	–	36.31	8.44	37.81	8.94

See page Eng-20 for additional integral gearmotor information.

Output shaft dimensions

Integral – flange mounted

Four- and five-stage reduction

HF_4GH_
HF_5GH_

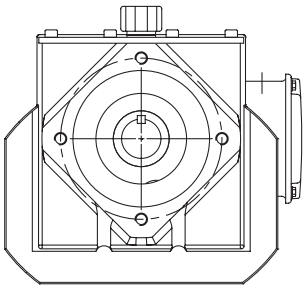

B14 Output flange

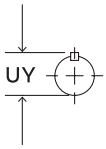

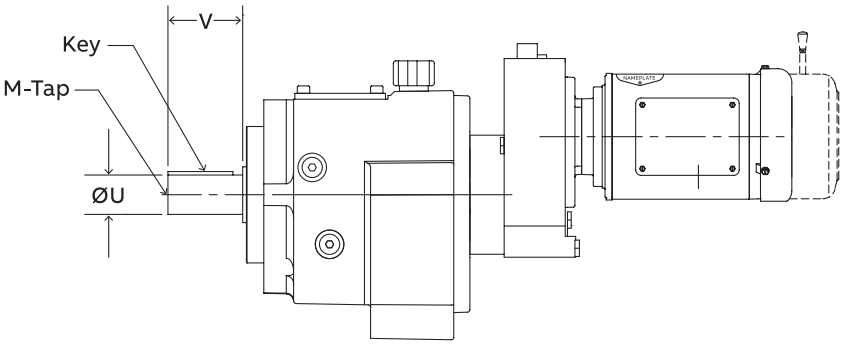

4 Stage reduction

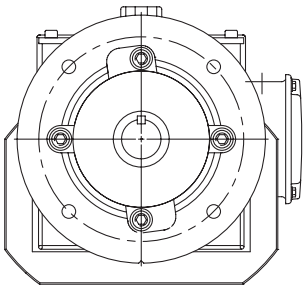

B5 Output flange

Metric output shaft

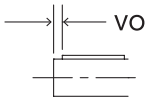

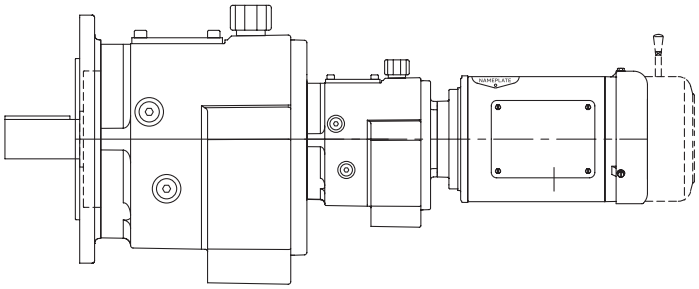

5 Stage reduction

	Standard inch output shaft						Standard metric output shaft						
	Ø U	Tol.	UY	V	Key	M-Tap	Ø U	Tol.	UY	V	Vo	Key	M-Tap
38	1.000	+0.0000 -0.0005	1.11	1.97	1/4 x 1/4 x 1-5/8	3/8-16 UNC X 0.87	25	+0.015 +0.002	28	50	7	8 x 7 x 40	M10 x 22
48	1.250	+0.0000 -0.0005	1.36	2.36	1/4 x 1/4 x 2	3/8-16 UNC X 0.87	30	+0.015 +0.002	33	60	7	8 x 7 x 50	M10 x 22
68	1.625	+0.0000 -0.0010	1.79	3.15	3/8 x 3/8 x 2-5/8	5/8-11 UNC X 1.42	40	+0.018 +0.002	43	90	5	12 x 8 x 70	M16 x 36
88	2.125	+0.0000 -0.0010	2.35	3.94	1/2 x 1/2 x 3-1/4	3/4-10 UNC X 1.65	50	+0.018 +0.002	54	100	10	14 X 9 X 80	M16 x 36
108	2.375	+0.0000 -0.0010	2.65	4.72	5/8 x 5/8 x 3-15/16	3/4-10 UNC X 1.65	60	+0.030 +0.011	64	120	10	18 x 11 x 100	M20 x 42
128	2.875	+0.0000 -0.0010	3.20	5.51	3/4 x 3/4 x 4-1/2	3/4-10 UNC X 1.65	70	+0.030 +0.011	75	140	15	20 x 12 x 110	M20 x 42
148	3.625	+0.0000 -0.0010	4.01	6.69	7/8 x 7/8 x 5-5/8	1-8 UNC X 1.97	90	+0.035 +0.013	95	170	15	25 x 14 x 140	M24 x 50
168	4.000	+0.0000 -0.0010	4.44	8.27	1 x 1 x 7-1/8	1-8 UNC X 1.97	100	+0.035 +0.013	106	210	15	28 x 16 x 180	M24 x 50

Optional output shaft page ILH-227

Gearcase dimensions

Integral – flange mounted

Four- and five-stage reduction

HF_4GH_
HF_5GH_

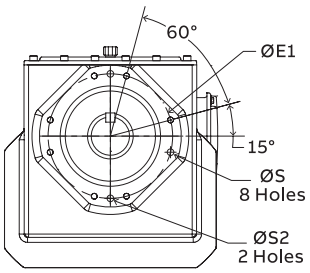

B14 Output flange
Sizes 108-168

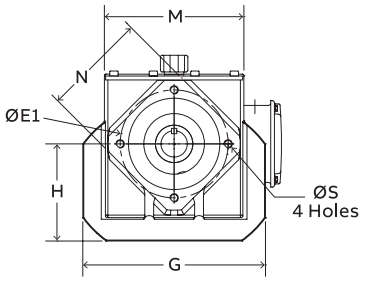

B14 Output flange
Sizes 38-88

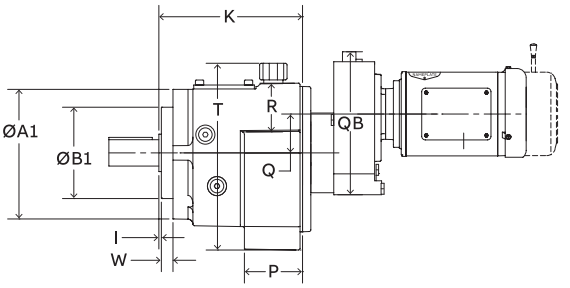

4 Stage reduction

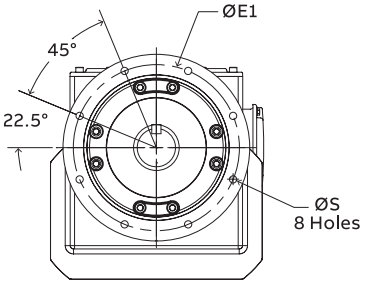

B5 Output flange
Sizes 128-168

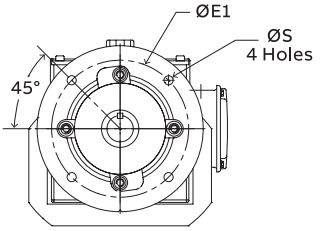

B5 Output flange
Sizes 38-108

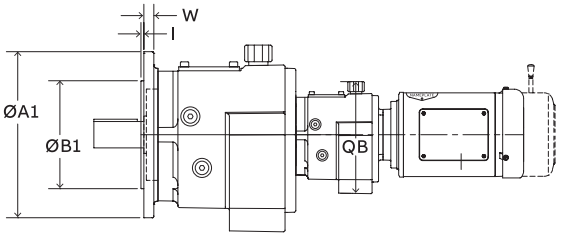

5 Stage reduction

	Mounting dimensions – B14 flange						Outline dimensions								
	Ø A1	Ø B1	Ø E1	Ø S	Ø S2	W	H	G	K	P	M	N	R	T	Q
38	4.72	3.1497	3.94	M8 x 0.43	–	0.39	3.62	6.45	5.51	2.32	5.07	3.96	1.83	6.29	0
48	6.30	4.3308	5.12	M10 x 0.63	–	0.59	4.61	8.66	6.81	2.76	6.61	4.91	2.31	8.86	0
68	7.48	5.1182	6.50	M12 x 0.67	–	0.55	5.67	10.39	8.23	3.27	8.14	6.10	2.97	10.68	0
88	9.65	7.0867	8.47	M16 x 0.87	–	0.71	7.17	13.07	10.47	4.25	10.23	7.73	3.62	13.22	0
108	11.82	7.8741	9.84	M16 x 1.10	0.47	0.91	8.70	16.14	12.24	4.94	12.84	9.91	4.64	16.42	0
128	13.40	9.4489	11.81	M16 x 0.87	0.63	1.10	9.84	18.19	14.72	5.63	14.33	11.92	5.04	18.27	0
148	13.39	9.4489	11.81	M16 x 0.87	0.63	1.06	12.48	20.08	16.18	6.30	16.38	11.87	6.48	20.95	1.44
168	15.76	11.8110	13.78	M20 x 1.34	0.63	1.38	14.09	22.84	19.45	7.26	18.50	11.80	8.46	24.82	1.66

	Standard B5 flange dimensions						Optional B5 flange dimensions						4 stage		5 stage	
	Ø A1	Ø B1	Ø E1	Ø S	I	W	Ø A1	Ø B1	Ø E1	Ø S	I	W	Q	QB	Q	QB
38	6.30	4.3308	5.12	0.35	0.14	0.39	7.87	5.1182	6.50	0.43	0.14	0.47	1.93	7.83	0	6.29
48	7.87	5.1182	6.50	0.43	0.14	0.47	9.84	7.0867	8.47	0.53	0.16	0.59	1.93	7.83	0	6.29
68	9.84	7.0867	8.47	0.53	0.16	0.59	11.81	9.0552	10.43	0.53	0.16	0.63	1.93	7.83	0	6.29
88	11.81	9.0551	10.43	0.53	0.16	0.63	13.78	9.8419	11.81	0.69	0.20	0.71	2.54	9.84	0	8.86
108	13.77	9.8419	11.81	0.69	0.20	0.71	17.72	13.7788	15.75	0.69	0.20	0.79	2.54	9.84	0	8.86
128	13.77	9.8419	11.81	0.69	0.20	0.78	17.72	13.7788	15.75	0.69	0.20	0.87	3.07	11.57	0	8.86
148	17.72	13.7788	15.75	0.69	0.20	0.87	21.64	17.7157	19.69	0.69	0.20	0.98	1.63	11.57	1.44	8.86
168	17.72	13.7788	15.75	0.69	0.20	1.22	21.65	17.7157	19.69	0.69	0.20	1.22	1.41	11.57	1.66	10.68

Standard motor dimensions

Integral – flange mounted

Four- and five-stage reduction

HF_4GH_
HF_5GH_

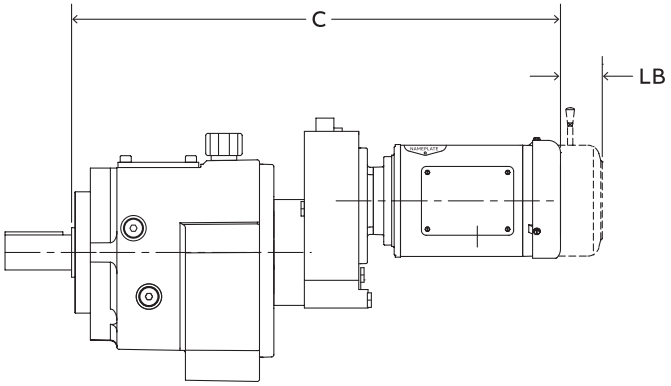

4 Stage reduction

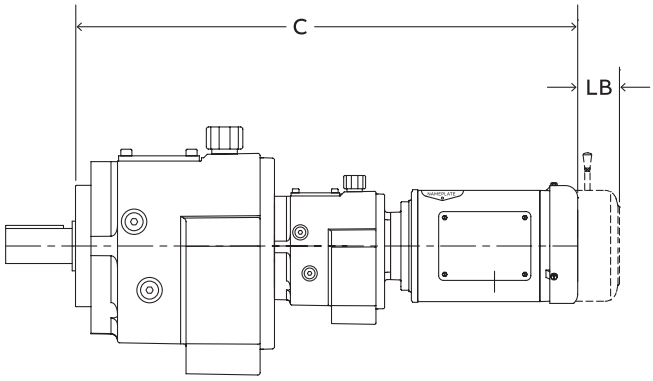

5 Stage reduction

Standard integral motor dimensions 1/4 – 10 Hp

Reducer size	Reducer stage	71C4/71D4/71E4		80F4		80G4		90H4		90I4		100J4		112L4		132M4		132N4	
		C	LB	C	LB	C	LB	C	LB	C	LB	C	LB	C	LB	C	LB	C	LB
38	4	21.00	2.37	–	–	–	–	–	–	–	–	–	–	–	–	–	–	–	–
	5	22.19	2.37	–	–	–	–	–	–	–	–	–	–	–	–	–	–	–	–
48	4	22.08	2.37	22.23	2.11	–	–	–	–	–	–	–	–	–	–	–	–	–	–
	5	23.26	2.37	–	–	–	–	–	–	–	–	–	–	–	–	–	–	–	–
68	4	23.52	2.37	23.67	2.11	–	–	–	–	–	–	–	–	–	–	–	–	–	–
	5	24.70	2.37	–	–	–	–	–	–	–	–	–	–	–	–	–	–	–	–
88	4	25.79	2.37	25.94	2.11	27.31	1.74	27.41	2.62	–	–	–	–	–	–	–	–	–	–
	5	27.99	2.37	–	–	–	–	–	–	–	–	–	–	–	–	–	–	–	–
108	4	27.64	2.37	27.79	2.11	29.16	1.74	29.26	2.62	30.14	1.74	32.10	1.75	33.86	2.51	–	–	–	–
	5	29.21	2.37	–	–	–	–	–	–	–	–	–	–	–	–	–	–	–	–
128	4	30.36	2.37	30.51	2.11	31.88	1.74	31.98	2.62	32.86	1.74	34.82	1.75	36.51	2.51	–	–	–	–
	5	31.47	2.37	–	–	–	–	–	–	–	–	–	–	–	–	–	–	–	–
148	4	31.67	2.37	31.82	2.11	33.19	1.74	33.29	2.62	34.17	1.74	36.13	1.75	37.82	2.51	39.34	6.38	–	–
	5	32.78	2.37	32.93	2.11	–	–	–	–	–	–	–	–	–	–	–	–	–	–
168	4	35.49	2.37	35.64	2.11	37.01	1.74	37.11	2.62	37.99	1.74	39.95	1.75	41.64	2.51	43.16	6.38	–	–
	5	37.98	2.37	38.13	2.11	39.50	1.74	39.60	2.62	–	–	–	–	–	–	–	–	–	–

See page Eng-20 for additional integral gearmotor information.

Washdown motor dimensions

Integral – flange mounted

Four- and five-stage reduction

HF_4GH_
HF_5GH_

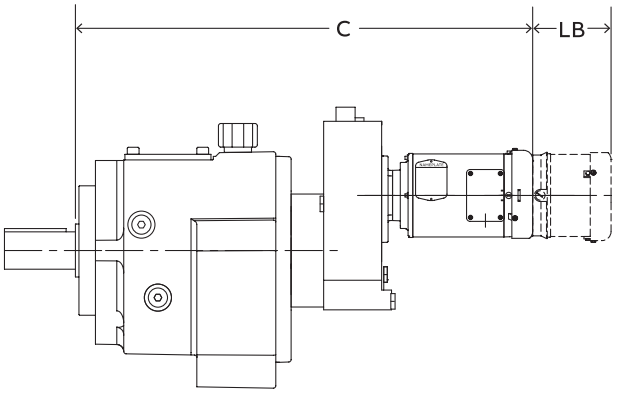

4 Stage reduction

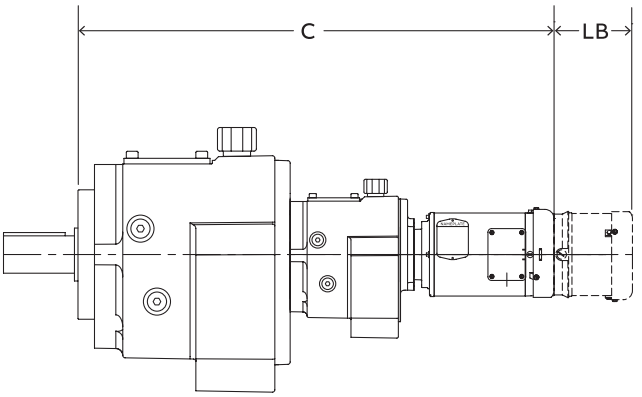

5 Stage reduction

Washdown integral motor dimensions 1/2 – 10 Hp

Reducer size	Reducer stage	71E4		80F4		80G4		90H4		90I4		100J4		112L4		132M4		132N4	
		C	LB	C	LB	C	LB	C	LB	C	LB	C	LB	C	LB	C	LB	C	LB
38	4	21.62	4.81	–	–	–	–	–	–	–	–	–	–	–	–	–	–	–	–
	5	22.81	4.81	–	–	–	–	–	–	–	–	–	–	–	–	–	–	–	–
48	4	22.70	4.81	22.60	4.81	–	–	–	–	–	–	–	–	–	–	–	–	–	–
	5	23.77	4.81	–	–	–	–	–	–	–	–	–	–	–	–	–	–	–	–
68	4	24.14	4.81	24.04	4.81	–	–	–	–	–	–	–	–	–	–	–	–	–	–
	5	25.32	4.81	–	–	–	–	–	–	–	–	–	–	–	–	–	–	–	–
88	4	26.41	4.81	26.31	4.81	27.31	3.81	27.41	5.26	–	–	–	–	–	–	–	–	–	–
	5	28.61	4.81	–	–	–	–	–	–	–	–	–	–	–	–	–	–	–	–
108	4	28.26	4.81	28.16	4.81	29.16	3.81	29.26	5.26	30.14	5.26	33.49	6.24	33.86	5.26	–	–	–	–
	5	29.83	4.81	29.73	–	–	–	–	–	–	–	–	–	–	–	–	–	–	–
128	4	30.98	4.81	30.88	4.81	31.88	3.81	31.98	5.26	32.86	5.26	36.21	6.24	36.51	5.26	–	–	–	–
	5	32.09	4.81	–	–	–	–	–	–	–	–	–	–	–	–	–	–	–	–
148	4	32.29	4.81	32.19	4.81	33.19	3.81	33.29	5.26	34.17	5.26	37.52	6.24	37.82	5.26	39.34	8.44	–	–
	5	33.40	4.81	33.30	4.81	–	–	–	–	–	–	–	–	–	–	–	–	–	–
168	4	36.11	4.81	36.01	4.81	37.01	3.81	37.11	5.26	37.99	5.26	41.34	6.24	41.64	5.26	43.16	8.44	–	–
	5	38.60	4.81	38.50	4.81	39.50	3.81	39.60	5.26	–	–	–	–	–	–	–	–	–	–

See page Eng-20 for additional integral gearmotor information.

Optional output shaft dimensions

Foot and flange mounted

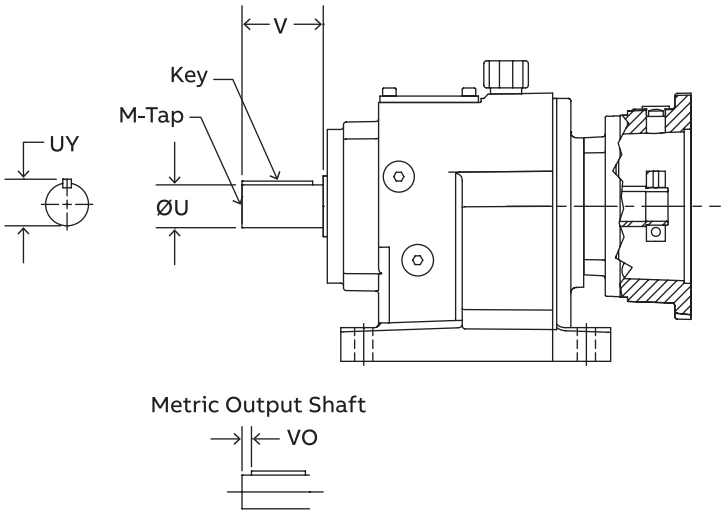

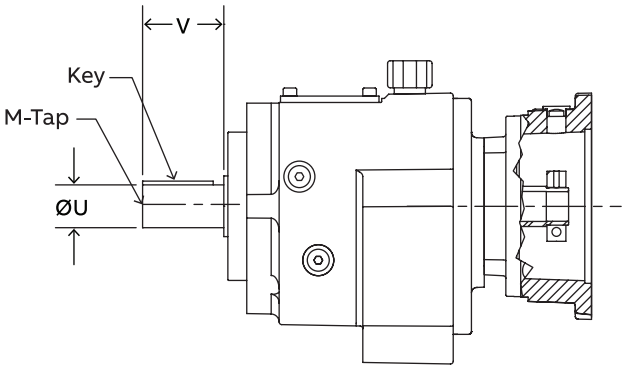

Optional inch output shaft

	Ø U	Tol	UY	V	Key	M-Tap
H_38	1.250	+0.0000 -0.0005	1.36	2.36	1/4 x 1/4 x 2	3/8-16 UNC X 0.87
H_48	1.375	+0.0000 -0.0005	1.52	4.50	5/16 x 5/16 x 2	1/2-13 UNC X 1.12
H_48	1.625	+0.0000 -0.0005	1.79	3.15	3/8 x 3/8 x 2-5/8	5/8-11 UNC X 1.42
H_68	2.125	+0.0000 -0.0010	2.35	3.94	1/2 x 1/2 x 3-1/4	3/4-10 UNC X 1.65
H_88	2.375	+0.0000 -0.0010	2.65	4.72	5/8 x 5/8 x 3-15/16	3/4-10 UNC X 1.65
H_108	2.875	+0.0000 -0.0010	3.20	5.51	3/4 x 3/4 x 4-1/2	3/4-10 UNC X 1.65
H_128	3.625	+0.0000 -0.0010	4.01	6.69	7/8 x 7/8 x 5-5/8	1-8 UNC X 1.97
H_148	4.000	+0.0000 -0.0010	4.44	8.27	1 x 1 x 7-1/8	1-8 UNC X 1.97
H_168	4.750	+0.0000 -0.0010	4.44	8.27	1-1/4 x 1-1/4 x 7	1-8 UNC X 1.97

Optional metric output shaft

	Ø U	Tol	UY	V	Vo	Key	M-Tap
H_38	30	+0.015 +0.002	33	60	7	8 x 7 x 50	M10 x 22
H_48	35	+0.018 +0.002	43	80	5	10 x 8 x 56	M12 x 28
H_48	40	+0.018 +0.002	64	120	5	12 x 7 x 70	M16 x 36
H_68	50	+0.0018 +0.002	95	170	10	14 x 9 x 80	M16 x 36
H_88	60	+0.030 +0.011	127	210	10	18 x 11x 100	M20 x 42
H_108	70	+0.030 +0.011	3.20	5.51	15	20 x 12 x 110	M20 x 42
H_128	90	+0.035 +0.013	4.01	6.69	15	25 x 14 x 140	M24 x 50
H_148	100	+0.035 +0.013	4.44	8.27	15	28 x 16 x 180	M24 x 50
H_168	120	+0.035 +0.013	4.44	8.27	15	32 x 18 x 180	M24 x 50

Slide base

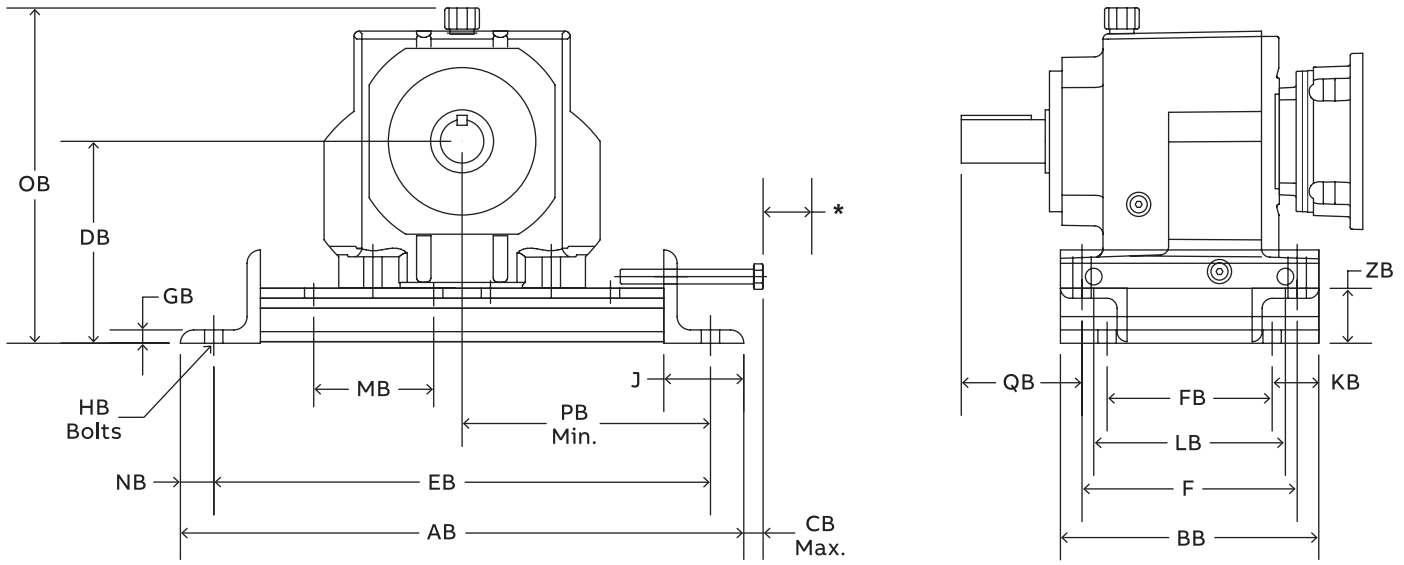

The Quantis ILH slide base positions the reducer, providing simplified installation and servicing of belt and chain drives. When a change in reducer position is desired, simply loosen reducer hold down bolts and slide reducer by using the adjusting screw provided. After desired belt or chain tension has been obtained, retighten reducer bolts and units are ready to operate

Unit size	Module number	AB	BB	CB	DB	EB	F	FB	GB	HB	J	KB	LB	MB	NB	OB	PB	QB	ZB	*	Weight (lbs.)
38	**091826**	14.50	6.31	1.69	4.85	12.75	5.12	4.38	0.38	1/2”	2.50	1.00	5.12	3.00	0.88	8.36	5.67	2.95	1.31	2.94	9
48	**091827**	18.75	7.88	0.97	6.59	16.00	6.50	5.88	0.50	1/2”	3.00	1.00	6.50	4.00	1.38	10.86	7.38	3.54	2.06	3.66	22
68	**091828**	21.13	9.69	1.28	7.57	18.63	8.07	6.19	0.50	5/8”	3.00	1.75	7.19	4.50	1.25	12.67	8.35	4.53	2.06	3.85	27
88	**091829**	23.84	12.25	1.04	9.65	21.34	10.24	8.75	0.50	5/8”	3.00	1.75	9.75	4.50	1.25	15.73	9.67	4.82	2.56	4.09	44
108	**091830**	27.25	14.38	2.59	11.96	24.50	12.20	10.88	0.75	3/4”	3.50	1.75	11.88	5.00	1.38	18.89	11.11	6.29	3.06	4.54	79
128	**091831**	35.44	17.25	1.67	13.90	31.44	14.56	13.75	0.75	1”	6.00	1.75	14.75	5.00	2.00	21.50	15.21	7.28	4.06	7.46	134
148	**091832**	38.25	19.31	3.23	17.46	34.25	16.14	15.81	1.00	1”	6.00	1.75	16.31	6.00	2.00	25.24	16.14	8.66	5.06	7.40	229
168	**091833**	41.19	23.25	5.83	19.04	36.69	19.69	17.75	1.00	1-1/2”	6.00	2.75	19.25	6.00	2.25	28.54	17.61	10.24	5.03	7.30	266

All dimensions are in inches

✤ Dimension is for standard inch shaft extension

* Minimum distance required to remove adjusting stud

Slide Base kits include (2) adjusting screws and the hardware required to mount the ILH reducer to the base.
Slide Bases are designed to be used with ILH double/triple reduction reducers.

Scoop mount

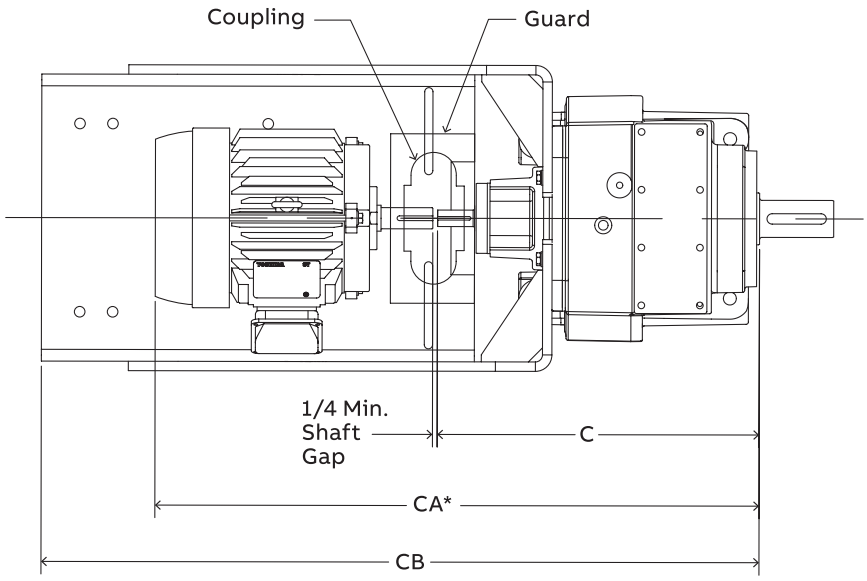

CA* Dimensions are for reference only, and will vary based on motor manufacturer and Hp requirements.

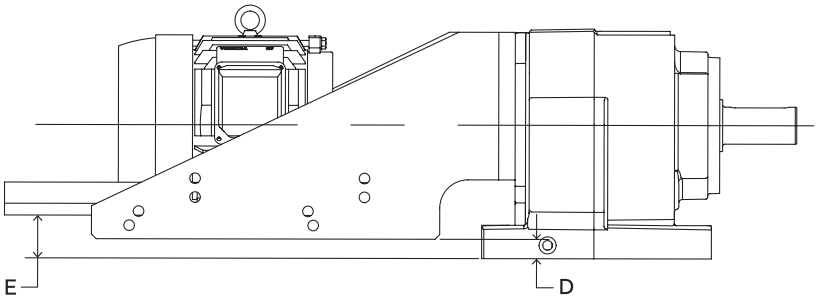

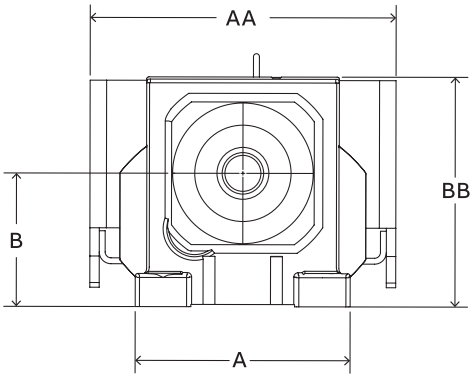

ILH scoop mount motor/reducers

Quantis size	Stage reduction	NEMA frame size	IEC frame size	Part number	A	AA	B	BB	C	CA*	CB	D	E
88	2	140	90	**095680**	11.42	16.25	7.09	12.21	17.17	30.66	38.20	1.27	3.24
	2	180	100	**095681**	11.42	16.25	7.09	12.21	17.68	32.67	38.71	1.27	2.27
	2	210	132	**095682**	11.42	16.25	7.09	12.21	20.94	39.48	42.72	1.27	1.52
	3	140	90	**095680**	11.42	16.25	7.09	12.21	18.15	31.64	39.18	1.27	3.24
	3	180	100	**095681**	11.42	16.25	7.09	12.21	18.78	33.77	39.81	1.27	2.27
	3	210	132	**095682**	11.42	16.25	7.09	12.21	22.05	40.59	43.84	1.27	1.52
108	2	210	132	**095685**	13.39	16.25	8.86	15.32	22.20	40.74	43.98	1.86	3.29
	2	250	160	**095686**	13.39	16.25	8.86	15.32	23.98	49.55	44.53	1.86	2.25
	3	140	90	**095683**	13.39	16.25	8.86	15.32	19.69	33.19	41.73	1.86	5.00
	3	180	100	**095684**	13.39	16.25	8.86	15.32	20.31	35.30	41.34	1.86	4.05
	3	210	132	**095685**	13.39	16.25	8.86	15.32	23.50	42.05	45.29	1.86	3.29
	3	250	160	**095686**	13.39	16.25	8.86	15.32	25.12	50.69	45.67	1.86	2.25
128	2	210	132	**095689**	15.75	19.63	9.84	17.13	24.29	42.83	45.17	2.09	4.28
	2	250	160	**095690**	15.75	19.63	9.84	17.13	25.79	51.35	47.55	2.09	3.23
	2	280	180	**095691**	15.75	19.63	9.84	17.13	26.73	54.50	48.20	2.09	2.44
	3	140	90	**095687**	15.75	19.63	9.84	17.13	21.89	35.39	44.40	2.09	5.99
	3	180	100	**095688**	15.75	19.63	9.84	17.13	22.52	37.52	44.03	2.09	5.03
	3	210	132	**095689**	15.75	19.63	9.84	17.13	25.63	44.18	46.50	2.09	4.28
	3	250	160	**095690**	15.75	19.63	9.84	17.13	27.24	52.79	48.99	2.09	3.23
	3	280	180	**095691**	15.75	19.63	9.84	17.13	28.19	55.94	49.66	2.09	2.44

Thermal Ratings

Thermal ratings – ILH 38

The Thermal Hp ratings shown in the table below are based on an ambient temperature of 68º F, continuous operation and fan cooled motors. For ratings at other ambient temperatures, please consult Thermal Factors table below. Triple reduction units are not thermally limited. Darker shaded values indicate thermal limitations under the above conditions.

Ratio	1750 RPM							3450 RPM						
	Output speed	Rated power	Mounting position					Output speed	Rated power	Mounting position				
			A1	A2	A3	A4	A5, A6			A1	A2	A3	A4	A5, A6
	RPM	Hp	Hp	Hp	Hp	Hp	Hp	RPM	Hp	Hp	Hp	Hp	Hp	Hp
4.77	**366.9**	**7.19**	14.2	14.1	14.1	14.1	14.1	**79.3**	**10.80**	12.7	11.7	11.8	11.8	11.8
5.55	**315.3**	**6.80**	13.4	13.4	13.3	13.3	13.3	**89.2**	**10.21**	12.2	11.6	11.6	11.7	11.6
6.16	**284.1**	**6.36**	12.6	12.5	12.5	12.5	12.5	**102.8**	**9.54**	11.5	11.3	11.0	11.0	11.0
6.71	**260.8**	**6.01**	12.7	12.7	12.7	12.7	12.7	**110.1**	**9.02**	11.8	11.4	11.4	11.5	11.4
7.50	**233.3**	**5.59**	11.9	11.8	11.8	11.8	11.8	**125.1**	**8.39**	11.1	10.8	10.8	10.8	10.8
7.52	**232.7**	**5.75**	10.1	10.0	10.0	10.0	10.0	**142.9**	**8.63**	9.1	8.4	8.6	8.7	8.6
8.75	**200.1**	**5.20**	10.4	10.4	10.4	10.4	10.4	**161.5**	**7.81**	9.5	9.2	9.0	9.1	9.0
9.70	**180.4**	**4.86**	9.7	9.7	9.7	9.7	9.7	**178.2**	**7.29**	8.9	8.5	8.6	8.8	8.6
10.57	**165.6**	**4.59**	9.8	9.8	9.8	9.8	9.8	**201.9**	**6.89**	9.1	8.8	8.8	8.9	8.8
11.82	**148.1**	**4.26**	9.2	9.1	9.1	9.1	9.1	**223.8**	**6.39**	8.6	8.3	8.3	8.4	8.3
12.92	**135.4**	**4.01**	8.8	8.7	8.6	8.7	8.6	**246.8**	**6.02**	8.1	8.0	8.0	8.0	8.0
14.18	**123.4**	**3.77**	8.3	8.3	8.4	8.4	8.4	**270.9**	**5.66**	7.8	7.7	7.7	7.7	7.7
15.64	**111.9**	**3.46**	7.9	7.9	7.9	7.9	7.9	**296.2**	**5.29**	7.5	7.4	7.4	7.4	7.4
17.33	**101.0**	**3.12**	7.5	7.5	7.5	7.5	7.5	**331.2**	**4.94**	7.2	7.1	7.0	7.1	7.0
19.64	**89.1**	**2.75**	7.2	7.2	7.2	7.2	7.2	**360.7**	**4.53**	7.0	6.9	6.9	6.9	6.9
21.67	**80.8**	**2.49**	6.7	6.7	6.7	6.7	6.7	**400.2**	**4.24**	6.5	6.4	6.4	6.4	6.4
24.50	**71.4**	**2.21**	6.1	6.1	6.1	6.1	6.1	**465.4**	**3.90**	5.9	5.9	5.9	5.9	5.9
27.97	**62.6**	**1.93**	6.2	6.1	6.1	6.1	6.1	**466.7**	**3.56**	6.0	5.9	5.9	6.0	5.9
31.80	**55.0**	**1.70**	5.6	5.6	5.6	5.6	5.6	**521.6**	**3.26**	5.5	5.5	5.5	5.5	5.5
34.04	**51.4**	**1.59**	5.5	5.5	5.5	5.5	5.5	**568.2**	**3.01**	5.3	5.4	5.4	5.4	5.4
39.24	**44.6**	**1.38**	5.0	5.0	5.0	5.0	5.0	**630.6**	**1.93**	4.9	4.8	4.8	4.9	4.8
44.12	**39.7**	**0.86**	4.6	4.6	4.6	4.6	4.6	**733.8**	**1.52**	4.5	4.5	4.5	4.5	4.5

ILH thermal factors

Ambient temp (Deg. F)	Thermal factor
0	1.78
20	1.56
40	1.34
60	1.11
68	1.00
80	0.88
100	0.63
120	0.44

Rated power as shown on the table above is for the largest available motor frame for a unit size and ratio. When using the factors in the table, compare result with the actual ratio and motor frame used.

Example: ILH 38, 10.57:1, 1750 RPM input speed, 140TC motor frame at 120 degree F ambient, A4 mounting position:

According to the table above, this unit is capable of 9.8 Hp Thermally at 68 degree F. To convert this to the capability at 120 degrees F, multiply the rating by the factor in the Thermal Factors table (0.44). Actual Thermal Rating is 9.8*0.44 = 4.3 Hp. The mechanical rating for the ILH 38, 10.57, 140TC frame is 4.59 Hp. This unit is now thermally limited to a rating of 4.3 Hp.

Thermal ratings – ILH 48

The Thermal Hp ratings shown in the table below are based on an ambient temperature of 68° F, continuous operation and fan cooled motors. For ratings at other ambient temperatures, please consult Thermal Factors table below. Triple, 4-stage and 5-stage reduction units are not thermally limited. Darker shaded values indicate thermal limitations under the above conditions.

Ratio	1750 RPM							3450 RPM						
	Output speed	Rated power	Mounting position					Output speed	Rated power	Mounting position				
			A1	A2	A3	A4	A5, A6			A1	A2	A3	A4	A5, A6
	RPM	Hp	Hp	Hp	Hp	Hp	Hp	RPM	Hp	Hp	Hp	Hp	Hp	Hp
4.28	**408.5**	**13.88**	32.9	32.3	32.3	32.3	32.3	**805.4**	**22.81**	32.1	27.1	28.1	28.6	28.1
5.15	**340.1**	**12.88**	30.4	29.9	30.0	30.0	30.0	**670.4**	**21.22**	30.4	27.3	27.8	28.3	27.8
6.06	**288.8**	**10.95**	28.5	28.2	28.2	28.2	28.2	**569.4**	**19.70**	29.0	27.2	27.5	27.7	27.5
6.79	**257.8**	**9.77**	27.7	27.5	27.5	27.5	27.5	**508.2**	**18.29**	28.7	27.3	27.5	27.7	27.5
6.90	**253.7**	**11.05**	21.6	21.2	21.2	21.3	21.2	**500.1**	**16.59**	21.3	18.2	18.9	19.5	18.9
8.29	**211.2**	**9.80**	22.9	21.9	22.0	22.0	22.0	**416.3**	**14.70**	22.1	19.7	20.3	20.8	20.3
9.76	**179.3**	**8.79**	20.8	20.8	20.6	20.7	20.6	**353.6**	**13.19**	21.1	19.7	19.9	20.2	19.9
10.93	**160.1**	**8.15**	20.2	20.1	20.0	20.1	20.0	**315.5**	**12.23**	20.6	19.7	19.8	20.1	19.8
12.25	**142.8**	**7.55**	19.2	19.1	19.1	19.2	19.1	**281.5**	**11.33**	19.9	19.1	19.2	19.5	19.2
13.38	**130.8**	**7.11**	18.3	18.3	18.3	18.3	18.3	**257.9**	**10.67**	19.0	18.5	18.6	19.3	18.6
14.68	**119.2**	**6.68**	17.7	17.6	17.6	17.8	17.6	**235.0**	**10.03**	18.5	18.1	18.1	18.3	18.1
16.17	**108.2**	**6.26**	16.7	16.6	16.6	16.6	16.6	**213.4**	**9.39**	17.5	17.2	17.2	17.3	17.2
17.55	**99.7**	**5.91**	16.0	16.0	15.9	15.9	15.9	**196.6**	**8.88**	16.9	16.6	16.6	16.7	16.6
19.13	**91.5**	**5.58**	15.2	15.2	15.2	15.2	15.2	**180.4**	**8.37**	16.4	15.9	15.9	16.0	15.9
20.95	**83.5**	**5.24**	14.4	14.4	14.4	14.4	14.4	**164.7**	**7.87**	15.3	15.5	15.5	15.3	15.5
23.07	**75.9**	**4.79**	13.6	13.6	13.6	13.6	13.6	**149.5**	**7.37**	14.5	14.4	14.4	14.5	14.4
26.53	**66.0**	**4.17**	12.8	12.8	12.8	12.8	12.8	**130.0**	**6.69**	13.7	13.6	13.6	13.7	13.6
28.74	**60.9**	**3.85**	12.2	12.2	12.2	12.2	12.2	**120.0**	**6.33**	12.9	12.8	12.8	12.9	12.8
31.77	**55.1**	**3.48**	11.4	11.3	11.3	11.4	11.3	**108.6**	**5.91**	12.2	12.1	12.1	12.3	12.1
37.06	**47.2**	**2.98**	10.7	10.8	10.8	10.8	10.8	**93.1**	**5.31**	11.5	11.5	11.5	11.5	11.5
41.26	**42.4**	**2.68**	10.0	10.0	10.0	10.0	10.0	**83.6**	**4.39**	10.7	10.7	10.7	10.7	10.7
45.38	**38.6**	**2.44**	9.4	9.4	9.4	9.4	9.4	**76.0**	**3.19**	10.3	10.1	10.1	10.1	10.1
51.28	**34.1**	**1.87**	8.6	8.6	8.6	8.6	8.6	**67.3**	**2.08**	9.3	9.3	9.3	9.3	9.3

ILH thermal factors

Ambient temp (Deg. F)	Thermal factor
0	1.78
20	1.56
40	1.34
60	1.11
68	1.00
80	0.88
100	0.63
120	0.44

Rated power as shown on the table above is for the largest available motor frame for a unit size and ratio. When using the factors in the table, compare result with the actual ratio and motor frame used.

Example: ILH 48, 10.93:1, 1750 RPM input speed, 180TC motor frame at 100 degree F ambient, A1 mounting position:

According to the table above, this unit is capable of 20.2 Hp Thermally at 68 degree F. To convert this to the capability at 100 degrees F, multiply the rating by the factor in the Thermal Factors table (0.63). Actual Thermal Rating is 20.2*0.63 = 12.7 Hp. The mechanical rating for the ILH 48, 10.93, 180TC frame is 8.15 Hp. This unit is not thermally limited.

Thermal ratings – ILH 58

The Thermal Hp ratings shown in the table below are based on an ambient temperature of 68° F, continuous operation and fan cooled motors. For ratings at other ambient temperatures, please consult Thermal Factors table below. Triple, 4-stage and 5-stage reduction units are not thermally limited. Darker shaded values indicate thermal limitations under the above conditions.

Ratio	1750 RPM							3450 RPM						
	Output speed	Rated power	Mounting position					Output speed	Rated power	Mounting position				
			A1	A2	A3	A4	A5, A6			A1	A2	A3	A4	A5, A6
	RPM	Hp	Hp	Hp	Hp	Hp	Hp	RPM	Hp	Hp	Hp	Hp	Hp	Hp
3.71	**471.7**	**25.3**	43.1	41.4	41.3	41.4	41.3	**929.9**	**47.7**	38.6	26.8	28.9	30.4	28.9
4.38	**399.5**	**21.7**	40.1	39.1	39.2	39.3	39.2	**787.7**	**40.9**	37.9	30.4	31.7	32.9	31.7
5.48	**319.3**	**17.5**	39.2	38.6	38.6	38.6	38.6	**629.6**	**33.2**	38.5	34.5	35.0	35.7	35.0
6.21	**281.8**	**15.6**	37.2	36.8	36.8	36.8	36.8	**555.6**	**29.5**	37.3	35.5	35.7	36.1	35.7
7.07	**247.5**	**18.6**	30.8	29.7	29.9	30.1	29.9	**488.0**	**34.6**	28.2	20.1	22.0	24.0	22.0
8.86	**197.5**	**15.1**	30.2	29.1	29.2	29.4	29.2	**389.4**	**28.2**	28.4	22.8	24.2	25.7	24.2
10.04	**174.3**	**13.5**	29.0	28.6	28.6	28.8	28.6	**343.6**	**25.1**	28.5	25.6	26.0	27.0	26.0
12.26	**142.7**	**11.2**	27.4	27.1	27.1	27.2	27.1	**281.4**	**20.9**	27.3	25.2	25.6	26.2	25.6
13.29	**131.7**	**10.4**	25.5	25.3	25.3	25.4	25.3	**259.6**	**19.4**	25.8	24.5	24.7	25.3	24.7
15.09	**116.0**	**9.2**	24.7	24.7	24.7	24.7	24.7	**228.6**	**17.3**	25.2	24.3	24.3	25.1	24.3
16.13	**108.5**	**8.7**	23.6	23.6	23.5	23.6	23.5	**213.9**	**16.3**	24.3	23.6	23.5	24.0	23.5
18.3	**95.6**	**7.7**	22.5	22.5	22.5	22.5	22.5	**188.5**	**14.5**	23.3	22.7	22.7	23.0	22.7
19.74	**88.7**	**7.2**	21.4	21.3	21.2	21.3	21.2	**174.8**	**13.5**	22.2	21.8	21.8	21.9	21.8
21.37	**81.9**	**6.7**	20.2	20.2	20.2	20.2	20.2	**161.4**	**12.5**	21.3	20.8	20.8	21.0	20.8
23.23	**75.3**	**6.2**	19.2	19.2	19.2	19.2	19.2	**148.5**	**11.6**	20.1	20.0	20.0	20.0	20.0
25.75	**68.0**	**5.6**	18.2	18.2	18.2	18.2	18.2	**134.0**	**10.6**	19.1	19.0	18.9	19.1	18.9
28.29	**61.9**	**5.1**	17.1	17.1	17.1	17.1	17.1	**122.0**	**9.7**	18.1	17.9	17.9	18.0	17.9
31.55	**55.5**	**4.6**	16.4	16.3	16.3	16.3	16.3	**109.4**	**8.7**	17.2	17.0	17.0	17.2	17.0
34.57	**50.6**	**4.3**	15.4	15.4	15.4	15.4	15.4	**99.8**	**8**	16.3	16.3	16.2	16.4	16.2
38.14	**45.9**	**3.9**	14.4	14.4	14.4	14.4	14.4	**90.5**	**7.3**	15.3	15.2	15.2	15.2	15.2
43.61	**40.1**	**3.4**	13.3	13.3	13.3	13.3	13.3	**79.1**	**6.5**	14.1	14.1	14.1	14.1	14.1
49.29	**35.5**	**3.04**	12.7	12.7	12.7	12.7	12.7	**70.0**	**5.8**	13.7	13.6	13.5	13.6	13.5
54.69	**32.0**	**2.74**	12.1	12.1	12.1	12.1	12.1	**63.1**	**5.2**	12.9	12.9	12.9	12.9	12.9

ILH thermal factors

Ambient temp (Deg. F)	Thermal factor
0	1.78
20	1.56
40	1.34
60	1.11
68	1.00
80	0.88
100	0.63
120	0.44

Rated power as shown on the table above is for the largest available motor frame for a unit size and ratio. When using the factors in the table, compare result with the actual ratio and motor frame used.

Example ILH 58, 5.48:1, 3450 RPM input speed, 210TC motor frame at 120 degree F ambient, A4 mounting position.

According to the table above, this unit is capable of 35.7 Hp Thermally at 68 degree F. To convert this to the capability at 120 degrees F, multiply the rating by the factor in the Thermal Factors table (0.44). Actual Thermal Rating is 35.7*0.44 = 15.71 Hp. The mechanical rating for the ILH 58, 5.48, 210TC frame is 17.50 Hp. This unit is now thermally limited to a rating of 15.71 Hp.

Thermal ratings – ILH 68

The Thermal Hp ratings shown in the table below are based on an ambient temperature of 68º F, continuous operation and fan cooled motors. For ratings at other ambient temperatures, please consult Thermal Factors table below. Triple, 4-stage and 5-stage reduction units are not thermally limited. Darker shaded values indicate thermal limitations under the above conditions.

Ratio	1750 RPM							3450 RPM						
	Output speed	Rated power	Mounting position					Output speed	Rated power	Mounting position				
			A1	A2	A3	A4	A5, A6			A1	A2	A3	A4	A5, A6
	RPM	Hp	Hp	Hp	Hp	Hp	Hp	RPM	Hp	Hp	Hp	Hp	Hp	Hp
3.49	**500.8**	**26.64**	53.2	50.5	50.3	50.5	50.3	**987.3**	**39.98**	45.0	26.4	29.7	32.1	29.7
4.22	**415.1**	**24.96**	49.8	48.2	48.4	48.5	48.4	**818.3**	**37.46**	45.4	33.4	35.5	37.5	35.5
5.06	**345.9**	**23.27**	49.9	49.0	49.0	49.0	49.0	**681.9**	**34.92**	48.0	41.8	42.4	43.6	42.5
5.93	**295.1**	**20.31**	46.6	46.0	46.0	46.0	46.0	**581.7**	**32.62**	45.9	43.7	43.9	44.5	43.9
6.72	**260.4**	**24.68**	40.0	38.1	38.6	38.8	38.6	**513.4**	**37.03**	35.1	21.9	25.1	28.5	25.1
8.11	**215.8**	**22.48**	37.5	36.3	36.4	36.8	36.4	**425.5**	**33.73**	34.6	25.9	28.0	30.5	28.0
9.73	**179.9**	**20.17**	37.2	36.4	36.6	36.8	36.6	**354.6**	**30.28**	35.9	31.4	32.1	33.7	32.1
11.40	**153.4**	**17.25**	34.5	34.1	34.2	34.3	34.2	**302.5**	**27.25**	33.9	30.7	31.4	32.3	31.4
13.59	**128.7**	**14.47**	31.7	31.5	31.5	31.6	31.5	**253.8**	**24.22**	31.6	29.8	30.1	31.0	30.1
14.74	**118.7**	**13.34**	31.1	31.0	31.0	31.0	31.0	**234.0**	**22.92**	31.4	30.0	30.0	30.9	30.0
16.45	**106.4**	**11.98**	29.5	29.5	29.4	29.4	29.4	**209.7**	**21.29**	30.0	29.0	28.9	29.6	28.9
17.82	**98.2**	**11.03**	28.3	28.3	28.3	28.3	28.3	**193.6**	**20.16**	29.0	28.1	28.1	28.6	28.1
20.20	**86.6**	**9.73**	26.7	26.6	26.5	26.6	26.5	**170.8**	**18.52**	27.4	26.9	26.9	27.1	26.9
21.76	**80.4**	**9.04**	25.2	25.2	25.2	25.2	25.2	**158.6**	**17.60**	26.1	25.6	25.6	25.9	25.6
23.53	**74.4**	**8.36**	24.0	24.0	24.0	24.0	24.0	**146.6**	**16.47**	24.9	24.5	24.5	24.7	24.5
25.55	**68.5**	**7.70**	22.8	22.8	22.8	22.8	22.8	**135.0**	**15.17**	23.7	23.6	23.4	23.6	23.4
28.25	**62.0**	**6.96**	21.4	21.4	21.4	21.4	21.4	**122.1**	**13.72**	22.4	22.2	22.1	22.2	22.1
30.60	**57.2**	**6.43**	20.5	20.4	20.4	20.4	20.4	**112.7**	**12.67**	21.5	21.2	21.2	21.4	21.2
34.49	**50.7**	**5.70**	19.4	19.4	19.4	19.4	19.4	**100.0**	**11.24**	20.4	20.4	20.3	20.4	20.3
37.76	**46.3**	**5.21**	18.1	18.0	18.0	18.0	18.0	**91.4**	**10.24**	19.0	18.9	18.9	18.9	18.9
42.06	**41.6**	**4.67**	16.6	16.6	16.6	16.6	16.6	**82.0**	**7.77**	17.5	17.5	17.5	17.5	17.5
48.09	**36.4**	**3.04**	16.0	16.0	16.0	16.0	16.0	**71.7**	**5.83**	17.0	17.0	16.9	17.0	16.9

ILH thermal factors

Ambient temp (Deg. F)	Thermal factor
0	1.78
20	1.56
40	1.34
60	1.11
68	1.00
80	0.88
100	0.63
120	0.44

Rated power as shown on the table above is for the largest available motor frame for a unit size and ratio. When using the factors in the table, compare result with the actual ratio and motor frame used.

Example: ILH 68, 11.40:1, 3450 RPM input speed, 180TC motor frame at 100 degree F ambient, A1 mounting position:

According to the table above, this unit is capable of 33.9 Hp Thermally at 68 degree F. To convert this to the capability at 100 degrees F, multiply the rating by the factor in the Thermal Factors table (0.63). Actual Thermal Rating is 33.9*0.63 = 21.3 Hp. The mechanical rating for the ILH 68, 11.40, 180TC frame is 20.43 Hp. This unit is not thermally limited.

Thermal ratings – ILH 88

The Thermal Hp ratings shown in the table below are based on an ambient temperature of 68º F, continuous operation and fan cooled motors. For ratings at other ambient temperatures, please consult Thermal Factors table below. Triple, 4-stage and 5-stage reduction units are not thermally limited. Darker shaded values indicate thermal limitations under the above conditions.

Ratio	1750 RPM							3450 RPM						
	Output speed	Rated power	Mounting position					Output speed	Rated power	Mounting position				
			A1	A2	A3	A4	A5, A6			A1	A2	A3	A4	A5, A6
	RPM	Hp	Hp	Hp	Hp	Hp	Hp	RPM	Hp	Hp	Hp	Hp	Hp	Hp
4.87	**359.4**	**45.45**	95.7	87.5	89.1	90.3	89.1	**708.6**	**89.61**	79.9	28.4	41.4	52.1	41.4
5.94	**294.7**	**45.45**	88.6	86.2	85.6	86.5	85.6	**581.0**	**87.06**	80.1	56.1	59.9	68.3	59.9
6.96	**251.5**	**44.49**	82.4	80.2	80.6	84.0	80.6	**495.8**	**77.40**	78.0	62.2	64.5	70.6	64.5
7.59	**230.5**	**43.15**	72.0	66.5	68.3	69.1	68.3	**454.4**	**64.76**	60.6	22.1	32.5	42.4	32.5
9.26	**189.0**	**37.37**	67.1	64.5	65.0	66.0	65.0	**372.6**	**56.08**	60.4	41.9	45.3	53.0	45.3
10.85	**161.3**	**33.51**	62.6	60.8	61.1	61.7	61.1	**318.0**	**50.28**	58.8	46.4	48.5	54.1	48.5
12.75	**137.2**	**30.13**	61.6	60.7	60.7	61.1	60.7	**270.5**	**45.20**	60.5	53.6	54.5	58.0	54.5
14.63	**119.6**	**27.60**	57.4	56.7	56.8	57.2	56.8	**235.8**	**41.40**	58.0	52.3	52.8	55.5	52.8
17.27	**101.3**	**23.91**	52.7	52.6	52.6	52.2	52.6	**199.8**	**37.25**	53.3	50.3	50.5	52.3	50.5
18.72	**93.5**	**22.06**	51.2	50.9	50.9	51.0	50.9	**184.3**	**34.92**	52.5	50.2	50.4	51.8	50.4
20.81	**84.1**	**19.84**	48.4	48.1	48.1	48.2	48.1	**165.8**	**32.10**	50.1	48.4	48.4	49.4	48.4
22.61	**77.4**	**18.26**	46.2	45.6	45.6	46.0	45.6	**152.6**	**30.07**	47.7	46.3	46.3	47.3	46.3
25.01	**70.0**	**16.51**	43.9	43.6	43.6	43.6	43.6	**138.0**	**27.80**	46.0	44.7	44.9	45.6	44.9
26.85	**65.2**	**15.38**	41.5	41.4	41.4	41.4	41.4	**128.5**	**26.29**	43.6	42.7	42.8	43.3	42.8
28.93	**60.5**	**14.27**	39.5	39.5	39.4	39.5	39.4	**119.2**	**24.84**	41.7	41.0	41.1	41.6	41.1
31.32	**55.9**	**13.18**	37.6	37.4	37.4	37.5	37.4	**110.2**	**23.37**	39.7	39.2	39.2	39.6	39.2
34.07	**51.4**	**12.12**	35.7	35.7	35.7	35.8	35.7	**101.3**	**21.92**	38.1	37.6	37.3	37.7	37.3
37.27	**46.9**	**11.08**	33.5	33.5	33.5	33.5	33.5	**92.6**	**18.13**	35.8	35.3	35.3	35.5	35.3
41.90	**41.8**	**9.19**	31.7	31.5	31.5	31.6	31.5	**82.3**	**15.14**	33.8	33.5	33.5	34.0	33.5
45.76	**38.2**	**8.50**	29.3	29.2	29.2	29.3	29.2	**75.4**	**13.99**	31.4	31.1	31.1	31.5	31.1
50.73	**34.5**	**5.58**	27.2	27.1	27.1	27.2	27.1	**68.0**	**9.01**	29.1	28.9	28.9	29.0	28.9

ILH thermal factors

Ambient temp (Deg. F)	Thermal factor
0	1.78
20	1.56
40	1.34
60	1.11
68	1.00
80	0.88
100	0.63
120	0.44

Rated power as shown on the table above is for the largest available motor frame for a unit size and ratio. When using the factors in the table, compare result with the actual ratio and motor frame used.

Example: ILH 88, 4.87:1, 3450 RPM input speed, 210TC motor frame at 40 degree F ambient, A2 mounting position:

According to the table above, this unit is capable of 28.4 Hp Thermally at 68 degree F. To convert this to the capability at 40 degrees F, multiply the rating by the factor in the Thermal Factors table (1.34). Actual Thermal Rating is 28.4*1.34 = 38.1 Hp. The mechanical rating for the ILH 88, 4.87, 210TC frame is 56.18 Hp. This unit is now thermally limited to a rating of 38.1 Hp.

Thermal ratings – ILH 108

The Thermal Hp ratings shown in the table below are based on an ambient temperature of 68º F, continuous operation and fan cooled motors. For ratings at other ambient temperatures, please consult Thermal Factors table below. Triple, 4-stage and 5-stage reduction units are not thermally limited. Darker shaded values indicate thermal limitations under the above conditions.

Ratio	1750 RPM							3450 RPM						
	Output speed	Rated power	Mounting position					Output speed	Rated power	Mounting position				
			A1	A2	A3	A4	A5, A6			A1	A2	A3	A4	A5, A6
	RPM	Hp	Hp	Hp	Hp	Hp	Hp	RPM	Hp	Hp	Hp	Hp	Hp	Hp
5.51	**317.8**	**75.54**	130.5	112.8	116.4	119.6	116.1	**626.4**	**139.62**	80.4	0.0	0.8	19.2	1.9
6.41	**273.1**	**67.46**	125.7	114.4	117.6	119.2	115.9	**538.4**	**124.69**	87.2	13.6	33.3	48.5	26.0
7.10	**246.4**	**62.38**	123.3	115.2	117.6	118.6	116.1	**485.8**	**115.29**	93.8	37.7	55.5	65.9	46.8
8.27	**211.6**	**92.12**	91.6	79.1	82.3	84.8	81.5	**417.1**	**146.32**	55.6	0.0	4.0	19.4	4.0
9.62	**181.8**	**79.20**	88.6	80.5	83.2	84.5	81.7	**358.5**	**132.90**	60.1	10.8	26.0	37.0	19.7
10.67	**164.1**	**71.40**	87.2	81.3	83.4	84.2	82.0	**323.4**	**124.28**	64.7	26.3	40.2	47.9	33.0
12.68	**138.1**	**60.08**	82.5	79.5	81.0	81.0	79.4	**272.2**	**111.07**	65.9	44.4	55.8	57.9	46.0
14.63	**119.6**	**52.08**	77.8	75.8	76.8	76.8	75.7	**235.8**	**100.19**	66.1	51.3	59.7	60.9	52.1
17.19	**101.8**	**44.32**	76.3	75.1	75.8	75.7	75.0	**200.7**	**87.37**	69.4	60.7	65.9	66.4	60.8
19.48	**89.8**	**39.11**	71.8	71.0	71.5	71.3	70.8	**177.1**	**77.10**	67.1	61.1	64.7	65.0	61.0
22.86	**76.6**	**33.33**	66.0	65.5	65.8	65.7	65.4	**150.9**	**65.70**	63.5	59.5	62.1	62.2	59.5
24.94	**70.2**	**30.55**	64.0	63.6	63.8	63.7	63.5	**138.4**	**60.22**	62.6	59.6	61.4	61.6	59.5
27.20	**64.3**	**27.96**	61.3	60.9	61.2	61.1	60.9	**126.8**	**55.13**	60.6	58.2	59.7	59.8	58.2
29.35	**59.6**	**25.96**	58.6	58.3	58.4	58.4	58.3	**117.5**	**51.17**	58.3	56.5	57.6	57.8	56.4
32.81	**53.3**	**23.22**	55.4	55.2	55.2	55.3	55.2	**105.2**	**45.78**	55.8	54.4	55.2	55.3	54.3
35.14	**49.8**	**21.68**	52.7	52.6	52.7	52.7	52.5	**98.2**	**42.74**	53.4	52.2	52.8	53.1	52.2
37.79	**46.3**	**20.16**	50.3	50.1	50.2	50.2	50.1	**91.3**	**33.43**	51.2	50.3	50.7	50.9	50.3
40.82	**42.9**	**18.66**	47.9	47.7	47.8	47.8	47.7	**84.5**	**31.23**	49.1	48.2	48.6	48.8	48.2
44.31	**39.5**	**17.19**	45.6	45.5	45.5	45.5	45.4	**77.9**	**29.03**	46.9	46.2	46.6	46.8	46.2
48.38	**36.2**	**15.75**	43.0	42.9	42.9	42.9	42.9	**71.3**	**24.98**	44.5	43.9	44.0	44.3	43.9

ILH thermal factors

Ambient temp (Deg. F)	Thermal factor
0	1.78
20	1.56
40	1.34
60	1.11
68	1.00
80	0.88
100	0.63
120	0.44

Rated power as shown on the table above is for the largest available motor frame for a unit size and ratio. When using the factors in the table, compare result with the actual ratio and motor frame used. A thermal rating of 0.0 indicates that this ratio and input RPM are not recommended.

Example: ILH 108, 19.48:1, 1750 RPM input speed, 250TC motor frame at 80 degree F ambient, A6 mounting position:

According to the table above, this unit is capable of 70.8 Hp Thermally at 68 degree F. To convert this to the capability at 80 degrees F, multiply the rating by the factor in the Thermal Factors table (0.88). Actual Thermal Rating is 70.8*0.88 = 62.3 Hp. The mechanical rating for the ILH 108, 19.48, 250TC frame is 38.07 Hp. This unit is not thermally limited.

Thermal ratings – ILH 128

The Thermal Hp ratings shown in the table below are based on an ambient temperature of 68° F, continuous operation and fan cooled motors. For ratings at other ambient temperatures, please consult Thermal Factors table below. Triple, 4-stage and 5-stage reduction units are not thermally limited. Darker shaded values indicate thermal limitations under the above conditions.

Ratio	1750 RPM							3450 RPM						
	Output speed	Rated power	Mounting position					Output speed	Rated power	Mounting position				
			A1	A2	A3	A4	A5, A6			A1	A2	A3	A4	A5, A6
	RPM	Hp	Hp	Hp	Hp	Hp	Hp	RPM	Hp	Hp	Hp	Hp	Hp	Hp
3.63	**482.5**	**135.96**	202.5	129.7	139.7	147.5	139.7	**951.3**	**247.66**	32.6	0	0	0	0
4.83	**362.7**	**126.33**	192.5	152.4	160.7	168.8	160.7	**715.0**	**231.27**	93.4	0	0	0	0
5.59	**313.2**	**114.62**	194.7	171.8	174.8	181.1	174.8	**617.5**	**211.38**	123.2	0	3.9	42.1	3.9
5.93	**295.3**	**135.98**	136.8	87.6	98.1	106.5	98.1	**582.2**	**247.72**	32.9	0	0	0	0
7.88	**222.0**	**126.52**	130.4	103.4	109.6	116.5	109.6	**437.6**	**222.48**	65.4	0	0	1.3	0
9.13	**191.7**	**116.62**	131.7	116.0	118.5	124.0	118.5	**377.9**	**202.63**	82.8	0	8.7	39.5	8.7
10.78	**162.4**	**104.95**	123.4	113.5	114.6	119.0	114.6	**320.1**	**182.09**	89.3	24.5	34.6	63.2	34.6
12.03	**145.4**	**96.35**	119.8	112.6	113.3	116.5	113.3	**286.7**	**169.60**	95.3	46.5	53.9	76.7	53.9
14.06	**124.5**	**85.09**	113.5	109.5	109.5	111.8	109.5	**245.3**	**153.08**	96.3	67.2	69.0	87.2	69
16.12	**108.6**	**76.13**	107.0	104.3	104.1	105.9	104.1	**214.0**	**139.84**	96.4	75.8	76.9	90.2	76.9
18.64	**93.9**	**67.24**	99.7	97.8	97.8	98.9	97.8	**185.1**	**124.57**	94.1	80.2	80.9	90.1	80.9
19.35	**90.5**	**64.77**	102.8	101.4	101.2	102.2	101.2	**178.3**	**120.73**	99.3	87.8	88.2	95.8	88.2
21.41	**81.7**	**58.54**	97.5	96.4	96.3	97.0	96.3	**161.2**	**110.89**	96.2	87.5	87.8	93.7	87.8
25.05	**69.9**	**50.04**	89.4	88.6	88.6	89.1	88.6	**137.7**	**97.03**	90.5	84.7	85.0	88.9	85.0
27.13	**64.5**	**46.20**	86.6	86.0	86.0	86.3	86.0	**127.2**	**90.60**	88.9	84.5	84.5	87.6	84.5
30.28	**57.8**	**41.39**	81.3	80.8	80.8	81.1	80.8	**113.9**	**81.60**	84.5	81.1	81.3	83.7	81.3
32.11	**54.5**	**39.03**	78.5	78.2	78.2	78.4	78.2	**107.5**	**76.95**	82.2	79.2	79.4	81.4	79.4
36.39	**48.1**	**28.42**	72.9	72.6	72.6	72.8	72.6	**94.8**	**52.12**	77.0	74.8	75.1	76.5	75.1
38.94	**44.9**	**26.84**	69.5	69.2	69.2	69.3	69.2	**88.6**	**47.63**	73.7	71.9	72.0	73.3	72.0
40.96	**42.7**	**17.95**	67.4	67.3	67.3	67.4	67.3	**84.2**	**32.48**	71.8	70.2	70.4	71.5	70.4

ILH thermal factors

Ambient temp (Deg. F)	Thermal factor
0	1.78
20	1.56
40	1.34
60	1.11
68	1.00
80	0.88
100	0.63
120	0.44

Rated power as shown on the table above is for the largest available motor frame for a unit size and ratio. When using the factors in the table, compare result with the actual ratio and motor frame used. A thermal rating of 0.0 indicates that this ratio and input RPM are not recommended.

Example: ILH 128, 12.03:1, 1750 RPM input speed, 320TC motor frame at 100 degree F ambient, A1 mounting position:

According to the table above, this unit is capable of 119.8 Hp Thermally at 68 degree F. To convert this to the capability at 100 degrees F, multiply the rating by the factor in the Thermal Factors table (0.63). Actual Thermal Rating is 119.8*0.63 = 75.5 Hp. The mechanical rating for the ILH 128, 12.03, 320TC frame is 96.35 Hp. This unit is now thermally limited to 75.5 Hp.

Thermal ratings – ILH 148

The Thermal Hp ratings shown in the table below are based on an ambient temperature of 68º F, continuous operation and fan cooled motors. For ratings at other ambient temperatures, please consult Thermal Factors table below. Triple, 4-stage and 5-stage reduction units are not thermally limited. Darker shaded values indicate thermal limitations under the above conditions.

Ratio	1750 RPM							3450 RPM						
	Output speed	Rated power	Mounting position					Output speed	Rated power	Mounting position				
			A1	A2	A3	A4	A5, A6			A1	A2	A3	A4	A5, A6
	RPM	Hp	Hp	Hp	Hp	Hp	Hp	RPM	Hp	Hp	Hp	Hp	Hp	Hp
4.92	**355.7**	**144.74**	262.5	170.2	177.0	185.8	177.0	**701.2**	**265.03**	14.0	0.0	0.0	0.0	0.0
6.43	**272.2**	**125.68**	253.6	199.3	207.7	218.0	207.7	**536.7**	**230.10**	105.6	0.0	0.0	0.0	0.0
7.57	**231.1**	**114.24**	250.4	219.8	222.3	231.4	222.3	**455.7**	**209.12**	156.3	0.0	0.0	39.1	0.0
8.79	**199.2**	**144.67**	163.2	107.1	117.0	130.8	117.0	**392.7**	**264.90**	26.2	0.0	0.0	0.0	0.0
11.48	**152.4**	**125.70**	167.0	133.3	139.5	150.9	139.5	**300.5**	**230.14**	75.2	0.0	0.0	2.7	0.0
13.52	**129.4**	**114.22**	165.7	146.0	148.5	157.0	148.5	**255.2**	**209.09**	104.0	0.8	10.2	55.0	10.2
15.51	**112.8**	**104.82**	159.1	145.5	146.6	153.4	146.6	**222.5**	**191.88**	113.5	29.5	39.0	82.4	39.0
17.09	**102.4**	**98.39**	156.3	146.4	146.9	152.3	146.9	**201.9**	**180.10**	123.6	57.7	64.7	100.7	64.7
20.21	**86.6**	**87.69**	146.9	141.3	141.1	144.8	141.1	**170.7**	**160.52**	127.5	90.5	92.1	117.6	92.1
23.04	**76.0**	**79.79**	138.9	134.9	134.9	137.5	134.9	**149.8**	**146.07**	128.2	100.0	101.1	120.4	101.1
26.49	**66.1**	**71.89**	129.9	127.3	127.2	128.9	127.2	**130.2**	**131.59**	126.1	106.8	107.4	121.1	107.4
30.28	**57.8**	**64.81**	127.6	126.0	125.9	127.0	125.9	**113.9**	**118.63**	129.7	117.6	117.6	126.4	117.6
35.09	**49.9**	**56.03**	117.9	116.8	116.7	117.4	116.7	**98.3**	**107.37**	123.0	114.9	115.1	121.0	115.1
38.23	**45.8**	**51.43**	114.0	113.2	113.1	113.6	113.1	**90.2**	**100.09**	120.9	114.7	114.7	119.3	114.7
42.59	**41.1**	**46.16**	107.3	106.7	106.5	107.0	106.5	**81.0**	**81.98**	115.2	110.6	110.7	114.0	110.7
45.11	**38.8**	**43.58**	103.8	103.1	103.1	103.5	103.1	**76.5**	**77.87**	112.0	108.1	108.1	111.1	108.1

ILH thermal factors

Ambient temp (Deg. F)	Thermal factor
0	1.78
20	1.56
40	1.34
60	1.11
68	1.00
80	0.88
100	0.63
120	0.44

Rated power as shown on the table above is for the largest available motor frame for a unit size and ratio. When using the factors in the table, compare result with the actual ratio and motor frame used. A thermal rating of 0.0 indicates that this ratio and input RPM are not recommended.

Example: ILH 148, 15.51:1, 3450 RPM input speed, 280TC motor frame at 60 degree F ambient, A4 mounting position:

According to the table above, this unit is capable of 82.4 Hp Thermally at 68 degree F. To convert this to the capability at 60 degrees F, multiply the rating by the factor in the Thermal Factors table (1.11). Actual Thermal Rating is 82.4*1.11 = 91.5 Hp. The mechanical rating for the ILH 148, 15.51, 280TC frame is 181.36 Hp. This unit is now thermally limited to 91.5 Hp.

Thermal ratings – ILH 168

The Thermal Hp ratings shown in the table below are based on an ambient temperature of 68º F, continuous operation and fan cooled motors. For ratings at other ambient temperatures, please consult Thermal Factors table below. Triple, 4-stage and 5-stage reduction units are not thermally limited. Darker shaded values indicate thermal limitations under the above conditions.

Ratio	1750 RPM							3450 RPM						
	Output speed	Rated power	Mounting position					Output speed	Rated power	Mounting position				
			A1	A2	A3	A4	A5, A6			A1	A2	A3	A4	A5, A6
	RPM	Hp	Hp	Hp	Hp	Hp	Hp	RPM	Hp	Hp	Hp	Hp	Hp	Hp
4.93	**355.2**	**158.68**	386.1	235.8	247.1	256.0	247.1	**700.2**	**297.65**	0.0	0.0	0.0	0.0	0.0
6.20	**282.2**	**145.11**	385.8	266.9	280.7	303.6	280.7	**556.3**	**265.70**	64.8	0.0	0.0	0.0	0.0
8.21	**213.1**	**158.81**	260.9	158.3	168.8	180.8	168.8	**420.1**	**297.90**	0.0	0.0	0.0	0.0	0.0
10.34	**169.3**	**145.02**	260.2	181.7	193.6	215.8	193.6	**333.8**	**265.53**	56.8	0.0	0.0	0.0	0.0
13.27	**131.9**	**126.00**	250.0	208.2	213.2	229.0	213.2	**260.0**	**230.69**	132.7	0.0	0.0	24.3	0.0
15.44	**113.3**	**114.71**	247.1	222.3	223.6	235.4	223.6	**223.4**	**210.06**	173.3	21.8	34.5	104.7	34.5
17.60	**99.4**	**105.34**	237.1	220.3	220.4	229.5	220.4	**196.0**	**192.83**	187.4	74.0	81.0	143.4	81.0
19.30	**90.7**	**98.94**	232.3	219.6	219.4	226.3	219.4	**178.7**	**181.09**	197.8	113.5	117.3	167.0	117.3
23.26	**75.2**	**86.59**	215.4	208.9	208.3	212.7	208.3	**148.3**	**158.50**	206.0	157.1	155.6	189.2	155.6
25.84	**67.7**	**80.04**	204.6	199.8	199.1	202.3	199.1	**133.5**	**146.53**	203.9	167.8	166.2	191.9	166.2
29.27	**59.8**	**72.73**	191.6	188.4	187.8	190.1	187.8	**117.9**	**133.16**	198.5	174.1	172.4	190.8	172.4
33.88	**51.6**	**64.76**	177.7	175.6	175.1	176.5	175.1	**101.8**	**118.56**	191.3	175.9	174.4	186.1	174.4
39.45	**44.4**	**57.19**	160.6	159.3	158.9	160.0	158.9	**87.5**	**104.67**	177.1	166.9	165.5	173.7	165.5
42.09	**41.6**	**53.86**	155.2	154.2	153.9	154.7	153.9	**82.0**	**98.60**	172.8	164.5	163.3	170.0	163.3
46.61	**37.5**	**51.55**	153.8	153.1	152.7	153.3	152.7	**74.0**	**83.76**	173.7	168.7	167.2	171.9	167.2

ILH thermal factors

Ambient temp (Deg. F)	Thermal factor
0	1.78
20	1.56
40	1.34
60	1.11
68	1.00
80	0.88
100	0.63
120	0.44

Rated power as shown on the table above is for the largest available motor frame for a unit size and ratio. When using the factors in the table, compare result with the actual ratio and motor frame used. A thermal rating of 0.0 indicates that this ratio and input RPM are not recommended.

Example: ILH 168, 17.60:1, 3450 RPM input speed, 250TC motor frame at 120 degree F ambient, A1 mounting position:

According to the table above, this unit is capable of 187.4 Hp Thermally at 68 degree F. To convert this to the capability at 120 degrees F, multiply the rating by the factor in the Thermal Factors table (0.44). Actual Thermal Rating is 187.4*0.44 = 82.5 Hp. The mechanical rating for the ILH 168, 17.60, 250TC frame is 89.63 Hp. This unit is now thermally limited to 82.5 Hp.

Weights

Weights – ILH 38

Unit size	Input configuration	Catalog number NEMA	Catalog number IEC	Output configuration: Foot mounted Weight (lbs) (L)	Foot mounted Weight (Kg) (L)	Flange mounted B14 Weight (lbs) (L)	B14 Weight (Kg) (L)	B5 Weight (lbs) (L)	B5 Weight (Kg) (L)	NEMA (Single reduction) Weight (lbs) (L)	NEMA (Single reduction) Weight (Kg) (L)
38	Clamp collar	**H_381CN56C**	**H_381CI71D**	21	10	19	9	23	10	22	10
		–	H_381CI80D	26	12	23	10	27	12	26	12
		H_381CN140TC	H_381CI90D	26	12	23	10	27	12	26	12
		H_381CN180TC	H_381CI100D	31	14	29	13	33	15	32	15
		H_382CN56C	H_382CI71D	31	14	29	13	33	15	–	–
		–	H_382CI80D	37	17	33	15	37	17		
		H_382CN140TC	H_382CI90D	37	17	33	15	37	17		
		H_382CN180TC	H_382CI100D	41	19	37	17	41	19		
		H_383CN56C	H_383CI71D	32	15	30	14	34	15		
		–	H_383CI80D	37	17	34	15	38	17		
		H_383CN140TC	H_383CI90D	37	17	34	15	38	17		
		H_384CN56C	H_384CI71D	47	21	44	20	49	22		
		–	H_384CI80D	51	23	48	22	53	24		
		H_384CN140TC	H_384CI90D	51	23	48	22	53	24		
		H_384CN180TC	H_384CI100D	57	26	54	25	59	27		
		H_385CN56C	H_385CI71D	57	26	54	25	59	27		
		–	H_385CI80D	61	28	58	26	63	29		
		H_385CN140TC	H_385CI90D	61	28	58	26	63	29		
		H_385CN180TC	H_385CI100D	65	30	62	28	67	31		
	3 pc coupled	**H_381LN56C**	**H_381LI71D**	30	14	28	13	32	15	31	14
		–	H_381LI80D	42	19	33	15	37	17	36	16
		H_381LN140TC	H_381LI90D	42	19	33	15	37	17	36	16
		H_381LN180TC	H_381LI100D	49	22	46	21	50	23	49	22
		H_382LN56C	–	32	15	37	17	41	19	–	–
		–	H_382LI80D	53	24	49	22	53	24		
		H_382LN140TC	H_382LI90D	53	24	49	22	53	24		
			H_382LI100D	64	29	60	27	64	29		
		H_383LN56C	–	33	15	38	17	42	19		
		–	H_383LI80D	54	24	51	23	55	25		
		H_383LN140TC	H_383LI90D	54	24	51	23	55	25		
		H_384LN56C	H_384LI71D	56	26	53	24	58	26		
		–	H_384LI80D	61	28	58	26	63	29		
		H_384LN140TC	H_384LI90D	61	28	58	26	63	29		
		H_384LN180TC	H_384LI100D	74	34	71	32	76	35		
		H_385LN56C	H_385LI71D	65	30	62	28	67	31		
		–	H_385LI80D	77	35	74	34	79	36		
		H_385LN140TC	H_385LI90D	77	35	74	34	79	36		
		H_385LN180TC	H_385LI100D	88	40	85	39	90	41		
	Separate group (inch / metric)	**H_381SI71**	**H_381SM71**	24	11	22	10	26	12	25	11
		H_381SI80	H_381SM80	33	15	31	14	35	16	34	15
		H_381SI90	H_381SM90	33	15	31	14	35	16	34	15
		H_381SI100	H_381SM100	39	18	37	17	41	19	40	18
		H_382SI71	H_382SM71	38	17	34	15	38	17	–	–
		H_382SI80	H_382SM80	46	21	42	19	46	21		
		H_382SI90	H_382SM90	46	21	42	19	46	21		
		H_382SI100	H_382SM100	47	21	43	20	47	21		
		H_383SI71	H_383SM71	40	18	37	17	41	19		
		H_383SI80	H_383SM80	48	22	45	20	49	22		
		H_383SI90	H_383SM90	48	22	45	20	49	22		
		H_384SI71	H_384SM71	50	23	47	21	52	24		
		H_384SI80	H_384SM80	59	27	56	26	61	28		
		H_384SI90	H_384SM90	59	27	56	26	61	28		
		H_384SI100	H_384SM100	65	30	62	28	67	31		
		H_385SI71	H_385SM71	62	28	59	27	64	29		
		H_385SI80	H_385SM80	70	32	67	31	72	33		
		H_385SI90	H_385SM90	70	32	67	31	72	33		
		H_385SI100	H_385SM100	71	32	68	31	73	33		

* Weights are approximate

(L) – See footnotes page on the inside back cover

Weights – ILH 38
(cont.)

Unit size	Input configuration	Catalog number NEMA	Catalog number IEC	Output configuration: Foot mounted Weight (lbs) (L)	Foot mounted Weight (Kg) (L)	Flange mounted B14 Weight (lbs) (L)	B14 Weight (Kg) (L)	B5 Weight (lbs) (L)	B5 Weight (Kg) (L)	NEMA (Single reduction) Weight (lbs) (L)	NEMA (Single reduction) Weight (Kg) (L)
38 (cont.)	Integral gearmotor (Hp)	**H_381GH71C4**	–	25	11	23	10	27	12	26	12
		H_381GH71D4		25	11	23	10	27	12	26	12
		H_381GH71E4		28	13	26	12	30	14	29	13
		H_381GH80F4		32	15	30	14	34	15	33	15
		H_381GH80G4		36	16	34	15	38	17	37	17
		H_381GH90H4		41	19	39	18	43	20	42	19
		H_381GH90I4		46	21	44	20	48	22	47	21
		H_381GH100J4		55	25	53	24	57	26	56	25
		H_382GH71C4		41	19	37	17	41	19	–	–
		H_382GH71D4		41	19	37	17	41	19		
		H_382GH71E4		45	20	41	19	45	20		
		H_382GH80F4		45	20	41	19	45	20		
		H_382GH80G4		48	22	44	20	48	22		
		H_382GH90H4		53	24	49	22	53	24		
		H_382GH90I4		58	26	54	24	58	26		
		H_382GH100J4		65	29	61	28	65	29		
		H_383GH71C4		41	19	38	17	42	19		
		H_383GH71D4		41	19	38	17	42	19		
		H_383GH71E4		45	20	42	19	46	21		
		H_383GH80F4		45	20	42	19	46	21		
		H_383GH80G4		48	22	45	20	49	22		
		H_383GH90H4		53	24	50	23	54	24		
		H_383GH90I4		58	26	55	25	59	27		
		H_384GH71C4		51	23	48	22	53	24		
		H_384GH71D4		51	23	48	22	53	24		

* Weights are approximate

(L) – See footnotes page on the inside back cover

Weights – ILH 48

Unit size	Input configuration	Catalog number NEMA	Catalog number IEC	Output configuration: Foot mounted Weight (lbs) (L)	Foot mounted Weight (Kg) (L)	Flange mounted B14 Weight (lbs) (L)	B14 Weight (Kg) (L)	B5 Weight (lbs) (L)	B5 Weight (Kg) (L)	NEMA (Single reduction) Weight (lbs) (L)	NEMA (Single reduction) Weight (Kg) (L)
48	Clamp collar	**H_481CN56C**	**H_481CI71D**	29	13	24	11	31	14	29	13
		–	H_481CI80D	33	15	28	13	35	16	33	15
		H_481CN140TC	H_481CI90D	33	15	28	13	35	16	33	15
		H_481CN180TC	H_481CI100D	38	17	34	15	41	19	39	18
		–	H_481CI112D	40	18	35	16	42	19	40	18
		H_482CN56C	H_482CI71D	53	24	50	23	57	26	–	–
		–	H_482CI80D	58	26	54	24	61	28		
		H_482CN140TC	H_482CI90D	58	26	54	24	61	28		
		H_482CN180TC	H_482CI100D	63	29	58	26	65	29		
		–	H_482CI112D	65	29	61	28	68	31		
		H_482CN210TC	–								
		H_483CN56C	H_483CI71D	54	24	51	23	58	26		
		–	H_483CI80D	59	27	55	25	62	28		
		H_483CN140TC	H_483CI90D	59	27	55	25	62	28		
		H_483CN18OTC	H_483CI100D	64	29	59	27	66	30		
		H_484CN56C	H_484CI71D	66	30	63	29	70	32		
		–	H_484CI80D	70	32	67	30	74	34		
		H_484CN140TC	H_484CI90D	70	32	67	30	74	34		
		H_484CN180TC	H_484CI100D	76	34	73	33	80	36		
		H_485CN56C	H_485CI71D	76	34	73	33	80	36		
		–	H_485CI80D	80	36	77	35	84	38		
		H_485CN140TC	H_485CI90D	80	36	77	35	84	38		
		H_485CN180TC	H_485CI100D	84	38	81	37	88	40		
	3 pc coupled	**H_481LN56C**	**–**	37	17	33	15	40	18	38	17
		–	H_481LI80D	43	20	45	20	52	24	50	23
		H_481LN140TC	H_481LI90D	43	20	45	20	52	24	50	23
		H_481LN180TC	H_481LI100D	56	25	51	23	58	26	56	25
		–	H_481LI112D	64	29	59	27	66	30	64	29
		H_482LN56C	–	54	24	58	26	65	29	–	–
		–	H_482LI80D	75	34	70	32	77	35		
		H_482LN140TC	H_482LI90D	75	34	70	32	77	35		
		H_482LN180TC	H_482LI100D	86	39	81	37	88	40		
		–	H_482LI112D	89	40	84	38	91	41		
		H_483LN56C	–	55	25	59	27	66	30		
		–	H_483LI80D	76	34	71	32	78	35		
		H_483LN140TC	H_483LI90D	76	34	71	32	78	35		
		H_483LN180TC	H_483LI100D	86	39	82	37	89	40		
		H_484LN56C	H_484LI71D	75	34	72	33	79	36		
		--	H_484LI80D	80	36	77	35	84	38		
		H_484LN140TC	H_484LI90D	80	36	77	35	84	38		
		H_484LN180TC	H_484LI100D	93	42	90	41	97	44		
		H_485LN56C	H_485LI71D	84	38	81	37	88	40		
		--	H_485LI80D	96	43	93	42	100	45		
		H_485LN140TC	H_485LI90D	96	43	93	42	100	45		
		H_485LN180TC	H_485LI100D	107	48	104	47	111	50		
	Separate group (inch / metric)	**H_481SI71**	**H_481SM71**	32	15	27	12	34	15	32	15
		H_481SI80	H_481SM80	41	19	36	16	43	20	41	19
		H_481SI90	H_481SM90	41	19	36	16	43	20	41	19
		H_481SI100	H_481SM100	47	21	42	19	49	22	47	21
		H_481SI112	H_481SM112	55	25	50	23	57	26	55	25
		H_482SI71	H_482SM71	61	28	57	26	64	29	–	–
		H_482SI80	H_482SM80	69	31	64	29	71	32		
		H_482SI90	H_482SM90	69	31	65	29	72	33		
		H_482SI100	H_482SM100	78	35	73	33	80	36		
		H_482SI112	H_482SM112	80	36	78	35	85	39		
		H_483SI71	H_483SM71	63	29	59	27	66	30		
		H_483SI80	H_483SM80	71	32	66	30	73	33		

* Weights are approximate

(L) – See footnotes page on the inside back cover

Weights – ILH 48
(cont.)

Unit size	Input configuration	Catalog number NEMA	Catalog number IEC	Output configuration: Foot mounted Weight (lbs) (L)	Foot mounted Weight (Kg) (L)	Flange mounted B14 Weight (lbs) (L)	B14 Weight (Kg) (L)	B5 Weight (lbs) (L)	B5 Weight (Kg) (L)	NEMA (Single reduction) Weight (lbs) (L)	NEMA (Single reduction) Weight (Kg) (L)
48 (cont.)	Separate group (inch / metric) (cont.)	**H_483SI90**	**H_483SM90**	71	32	67	30	74	34	–	–
		H_483SI100	H_483SM100	80	36	75	34	82	37		
		H_484SI71	H_484SM71	69	31	66	30	73	33		
		H_484SI80	H_484SM80	89	35	75	34	82	37		
		H_484SI90	H_484SM90	89	35	75	34	82	37		
		H_484SI100	H_484SM100	84	38	81	37	88	40		
		H_485SI71	H_485SM71	81	37	78	35	85	39		
		H_485SI80	H_485SM80	89	40	86	39	93	42		
		H_485SI90	H_485SM90	89	40	86	39	93	42		
		H_485SI100	H_485SM100	90	41	87	39	94	43		
	Integral gearmotor Hp	**H_481GH71C4**	–	33	15	28	13	35	16	33	15
		H_481GH71D4		33	15	28	13	35	16	33	15
		H_481GH71E4		36	16	31	14	38	17	36	16
		H_481GH80F4		40	18	35	16	42	19	40	18
		H_481GH80G4		44	20	39	18	46	21	44	20
		H_481GH90H4		49	22	44	20	51	23	49	22
		H_481GH90I4		54	24	49	22	56	25	54	24
		H_481GH100J4		63	29	58	26	65	29	63	29
		H_481GH112L4		90	41	85	39	92	42	90	41
		H_482GH71C4		62	28	58	26	65	29	–	–
		H_482GH71D4		62	28	58	26	65	29		
		H_482GH71E4		66	30	62	28	69	31		
		H_482GH80F4		66	30	62	28	69	31		
		H_482GH80G4		69	31	65	29	72	33		
		H_482GH90H4		74	34	70	32	77	35		
		H_482GH90I4		79	36	75	34	82	37		
		H_482GH100J4		86	39	82	37	89	40		
		H_482GH112L4		108	49	104	47	111	50		
		H_483GH71C4		63	29	59	27	66	30		
		H_483GH71D4		63	29	59	27	66	30		
		H_483GH71E4		67	30	63	29	70	32		
		H_483GH80F4		67	30	63	29	70	32		
		H_483GH80G4		70	32	66	30	73	33		
		H_483GH90H4		75	34	71	32	78	35		
		H_483GH90I4		80	36	76	34	83	38		
		H_483GH100J4		87	39	83	38	90	41		
		H_484GH71C4		70	32	67	30	74	34		
		H_484GH71D4		70	32	67	30	74	34		
		H_484GH71E4		73	33	70	32	77	35		
		H_484GH80F4		77	35	74	34	81	37		
		H_485GH71C4		84	38	81	37	88	40		

* Weights are approximate

(L) - See footnotes page on the inside back cover

* Weights are approximate

(L) – See footnotes page on the inside back cover

Weights – ILH 58

Unit size	Input configuration	Catalog number		Output configuration							
				Foot mounted		Flange mounted					
						B14		B5		NEMA (Single reduction)	
		NEMA	IEC	Weight (lbs) (L)	Weight (Kg) (L)	Weight (lbs) (L)	Weight (Kg) (L)	Weight (lbs) (L)	Weight (Kg) (L)	Weight (lbs) (L)	Weight (Kg) (L)
58	Clamp Collar	**H_582CN56C**	**H_582CI71D**	72	32	63	29	72	33	–	–
		-	H_582CI80D	76	34	67	31	76	34		
		H_582CN140TC	H_582CI90D	76	34	67	31	76	34		
		H_582CN180TC	H_582CI100D	79	36	70	32	79	36		
		-	H_582CI112D	80	36	71	32	80	36		
		H_582CN210TC	H_582CI132D	90	41	82	37	91	41		
		H_583CN56	H_583CI71D	74	33	65	30	74	34		
		-	H_583CI80D	78	35	69	31	78	35		
		H_583CN140TC	H_583CI90D	78	35	69	31	78	35		
		H_583CN180TC	H_583CI100D	81	37	73	33	81	37		
	Three-piece coupled	H_582LN56C	H_582LI71D	76	34	67	31	76	34		
		-	H_582LI80D	97	44	88	40	97	44		
		H_582LN140TC	H_582LI90D	97	44	88	40	97	44		
		H_582LN180TC	H_582LI100D	108	49	99	45	108	49		
		-	H_582LI112D	111	50	102	46	111	50		
		H_582LN210TC	H_582LI132D	130	59	121	55	130	59		
		H_583LN56	H_583LI71D	78	35	69	31	78	35		
		-	H_583LI80D	99	45	90	41	99	45		
		H_583LN140TC	H_583LI90D	99	45	90	41	99	45		
		H_583LN180TC	H_583LI100D	110	50	101	46	110	50		
	Separate Group	H_582SI71	H_582SM71	85	38	76	35	85	39		
		H_582SI80	H_582SM80	94	42	85	39	94	43		
		H_582SI90	H_582SM90	94	42	85	39	94	43		
		H_582SI100	H_582SM100	100	45	91	41	100	45		
		H_582SI112	H_582SM112	108	49	99	45	108	49		
		H_582SI132	H_582SM132	126	57	117	53	126	57		
		H_583SI71	H_583SM71	87	39	78	36	87	40		
		H_583SI80	H_583SM80	96	43	87	40	96	44		
		H_583SI90	H_583SM90	96	43	87	40	96	44		
		H_583SI100	H_583SM100	102	46	93	42	102	46		
	Integral Gearmotor	H_582GH71C4	-	84	38	75	34	84	38		
		H_582GH71D4		84	38	75	34	84	38		
		H_582GH71E4		84	38	75	34	84	38		
		H_582GH80F4		88	40	79	36	88	40		
		H_582GH80G4		88	40	79	36	88	40		
		H_582GH90H4		96	43	87	40	96	44		
		H_582GH90I4		96	43	89	41	98	45		
		H_582GH100J4		110	50	101	46	110	50		
		H_582GH112L4		132	60	123	56	132	60		
		H_582GH132M4		229	104	220	100	229	104		

* Weights are approximate

(L) – See footnotes page on the inside back cover

Weights – ILH 68

Unit size	Input configuration	Catalog number		Output configuration							
				Foot mounted		Flange mounted					
						B14		B5		NEMA (Single reduction)	
		NEMA	IEC	Weight (lbs) (L)	Weight (Kg) (L)	Weight (lbs) (L)	Weight (Kg) (L)	Weight (lbs) (L)	Weight (Kg) (L)	Weight (lbs) (L)	Weight (Kg) (L)
68	Clamp collar	**H_681CN56C**	**H_681CI71D**	45	20	42	19	53	24	52	24
		–	H_681CI80D	49	22	46	21	57	26	56	25
		H_681CN140TC	H_681CI90D	49	22	46	21	57	26	56	25
		H_681CN180TC	H_681CI100D	55	25	51	23	62	28	61	28
		–	H_681CI112D	56	25	53	24	64	29	63	29
		H_681CN210TC	H_681CI132D	70	32	67	30	78	35	77	35
		H_682CN56C	H_682CI71D	87	39	83	38	94	43		
		–	H_682CI80D	95	43	87	39	98	44		
		H_682CN140TC	H_682CI90D	95	43	87	39	98	44		
		H_682CN180TC	H_682CI100D	100	45	92	42	103	47		
		–	H_682CI112D	102	46	94	43	105	48		
		H_682CN210TC	H_682CI132D	115	52	108	49	119	54		
		H_682CN250TC	–								
		H_683CN56C	H_683CI71D	93	42	86	39	97	44		
		–	H_683CI80D	99	45	90	41	101	46		
		H_683CN140TC	H_683CI90D	98	44	90	41	101	46	–	–
		H_683CN180TC	H_683CI100D	103	47	95	43	106	48		
		H_684CN56C	H_684CI71D	107	49	99	45	110	50		
		–	H_684CI80D	111	50	103	47	114	52		
		H_684CN140TC	H_684CI90D	111	50	103	47	114	52		
		H_684CN180TC	H_684CI100D	117	53	109	49	120	54		
		H_685CN56C	H_685CI71D	117	53	109	49	120	54		
		–	H_685CI80D	121	55	113	51	124	56		
		H_685CN140TC	H_685CI90D	121	55	113	51	124	56		
		H_685CN180TC	H_685CI100D	125	57	117	53	128	58		
	3 pc coupled	**H_685CN140TC**	H_685CI90D	121	55	113	51	124	56	60	27
		H_681LN140TC	H_681LI90D	66	30	62	28	73	33	72	33
		H_681LN180TC	H_681LI100D	72	33	69	31	80	36	79	36
		H_685CN180TC	H_685CI100D	125	57	117	53	128	58	72	33
		–	H_681LI112D	80	36	77	35	88	40	87	39
		H_681LN210TC	H_681LI132D	88	40	85	39	96	44	95	43
		H_682LN56C	–	91	41	91	41	102	46		
		H_682LN140TC	H_682LI90D	112	51	104	47	115	52		
		H_682LN180TC	H_682LI100D	123	56	115	52	126	57		
		–	H_682LI112D	126	57	118	54	129	59		
		H_682LN210TC	H_682LI132D	145	66	137	62	148	67		
		H_683LN56C	–	94	43	94	43	105	48		
		–	H_683LI80D	115	52	107	49	118	54		
		H_683LN140TC	H_683LI90D	115	52	107	49	118	54		
		H_683LN180TC	H_683LI100D	126	57	118	54	129	59	–	–
		H_684LN56C	H_684LI71D	116	53	108	49	119	54		
		–	H_684LI80D	121	55	113	51	124	56		
		H_684LN140TC	H_684LI90D	121	55	113	51	124	56		
		H_684LN180TC	H_684LI100D	134	61	126	57	137	62		
		H_685LN56C	H_685LI71D	125	57	117	53	128	58		
		–	H_685LI80D	137	62	129	59	140	64		
		H_685LN140TC	H_685LI90D	137	62	129	59	140	64		
		H_685LN180TC	H_685LI100D	148	67	140	64	151	69		

* Weights are approximate

(L) – See footnotes page on the inside back cover

Weights – ILH 68
(cont.)

Unit size	Input configuration	Catalog number		Output configuration							
				Foot mounted		Flange mounted					
						B14		B5		NEMA (Single reduction)	
		NEMA	IEC	Weight (lbs) (L)	Weight (Kg) (L)	Weight (lbs) (L)	Weight (Kg) (L)	Weight (lbs) (L)	Weight (Kg) (L)	Weight (lbs) (L)	Weight (Kg) (L)
68 (cont.)	Separate group (inch / metric) (cont.)	**H_681SI71**	**H_681SM71**	48	22	45	20	56	25	55	25
		H_681SI80	H_681SM80	57	26	54	24	65	29	64	29
		H_681SI90	H_681SM90	57	26	54	24	65	29	64	29
		H_681SI100	H_681SM100	63	29	60	27	71	32	70	32
		H_681SI112	H_681SM112	71	32	68	31	79	36	78	35
		H_681SI132	H_681SM132	89	40	86	39	97	44	96	44
		H_682SI71	H_682SM71	100	45	92	42	103	47	–	–
		H_682SI80	H_682SM80	111	50	100	45	111	50		
		H_682SI90	H_682SM90	108	49	100	45	111	50		
		H_682SI100	H_682SM100	117	53	109	49	120	54		
		H_682SI112	H_682SM112	120	54	112	51	123	56		
		H_682SI132	H_682SM132	141	64	133	60	144	65		
		H_683SI71	H_683SM71	106	48	106	48	117	53		
		H_683SI80	H_683SM80	112	51	105	48	116	53		
		H_683SI90	H_683SM90	114	52	105	48	116	53		
		H_683SI100	H_683SM100	122	55	114	52	125	57		
		H_684SI71	H_684SM71	110	50	102	46	113	51		
		H_684SI80	H_684SM80	119	54	111	50	122	55		
		H_684SI90	H_684SM90	119	54	111	50	122	55		
		H_684SI100	H_684SM100	125	57	117	53	128	58		
		H_685SI71	H_685SM71	122	55	114	52	125	57		
		H_685SI80	H_685SM80	130	59	122	55	133	60		
		H_685SI90	H_685SM90	130	59	122	55	133	60		
		H_685SI100	H_685SM100	131	59	123	56	134	61		
	Integral gearmotor (Hp)	**H_681GH71C4**	–	49	22	46	21	57	26	56	25
		H_681GH71D4		49	22	46	21	57	26	56	25
		H_681GH71E4		52	24	49	22	60	27	59	27
		H_681GH80F4		56	25	53	24	64	29	154	70
		H_681GH80G4		60	27	57	26	68	31	67	30
		H_681GH90H4		65	29	62	28	73	33	72	33
		H_681GH90I4		70	32	67	30	78	35	77	35
		H_681GH100J4		79	36	76	34	87	39	86	39
		H_681GH112L4		106	48	103	47	114	52	113	51
		H_681GH132M4		136	62	133	60	144	65	143	65
		H_681GH132N4		147	67	144	65	155	70	154	70
		H_682GH71C4		99	45	91	41	102	46	–	–
		H_682GH71D4		99	45	91	41	102	46		
		H_682GH71E4		103	47	95	43	106	48		
		H_682GH80F4		103	47	95	43	106	48		
		H_682GH80G4		106	48	98	44	109	49		
		H_682GH90H4		111	50	103	47	114	52		
		H_682GH90I4		116	53	108	49	119	54		
		H_682GH100J4		123	56	115	52	126	57		
		H_682GH112L4		145	66	137	62	148	67		
		H_682GH132M4		242	110	234	106	245	111		
		H_682GH132N4		242	110	234	106	245	111		
		H_683GH71C4		102	46	94	43	105	48		
		H_683GH71D4		102	46	94	43	105	48		
		H_683GH71E4		106	48	98	44	109	49		
		H_683GH80F4		106	48	98	44	109	49		
		H_685GH71C4		125	57	117	53	128	58		

* Weights are approximate

(L) – See footnotes page on the inside back cover

Weights – ILH 88

Unit size	Input configuration	Catalog number NEMA	Catalog number IEC	Output configuration: Foot mounted Weight (lbs) (L)	Foot mounted Weight (Kg) (L)	Flange mounted B14 Weight (lbs) (L)	B14 Weight (Kg) (L)	B5 Weight (lbs) (L)	B5 Weight (Kg) (L)	NEMA (Single reduction) Weight (lbs) (L)	NEMA (Single reduction) Weight (Kg) (L)
88	Clamp collar	**H_881CN140TC**	**H_881CI90D**	74	34	66	30	85	39	84	38
		H_881CN180TC	H_881CI100D	79	36	72	33	91	41	90	41
		–	H_881CI112D	81	37	73	33	92	42	91	41
		H_881CN210TC	H_881CI132D	94	43	87	39	106	48	105	48
		H_881CN250TC	H_881CI160D	119	54	112	51	131	59	130	59
		H_882CN140TC	H_882CI90D	161	73	153	69	172	78	–	–
		H_882CN180TC	H_882CI100D	172	78	157	71	176	80		
		–	H_882CI112D	175	79	160	73	179	81		
		H_882CN210TC	H_882CI132D	188	85	174	79	193	88		
		H_882CN250TC	H_882CI160D	222	101	208	94	227	103		
		H_882CN280TC	–								
		H_883CN56C	H_883CI71D	164	74	151	68	170	77		
		–	H_883CI80D	170	77	155	70	174	79		
		H_883CN140TC	H_883CI90D	170	77	155	70	174	79		
		H_883CN180TC	H_883CI100D	174	79	159	72	178	81		
		–	H_883CI112D	177	80	162	73	181	82		
		H_883CN210TC	H_883CI132D	190	86	176	80	195	88		
		H_884CN56C	H_884CI71D	181	82	167	76	186	84		
		–	H_884CI80D	185	84	171	78	190	86		
		H_884CN140TC	H_884CI90D	185	84	171	78	190	86		
		H_884CN180TC	H_884CI100D	191	87	177	80	196	89		
		–	H_884CI112D	192	87	178	81	197	89		
		H_885CN56C	H_885CI71D	207	94	193	88	212	96		
		–	H_885CI80D	211	96	197	89	216	98		
		H_885CN140TC	H_885CI90D	211	96	197	89	216	98		
		H_885CN180TC	H_885CI100D	215	98	201	91	220	100		
		–	H_885CI112D	218	99	204	93	223	101		
	3 pc coupled	**H_881LN140TC**	**H_881LI90D**	90	41	83	38	102	46	101	46
		H_881LN180TC	H_881LI100D	97	44	89	40	108	49	107	49
		–	H_881LI112D	104	47	97	44	116	53	115	52
		H_881LN210TC	H_881LI132D	112	51	105	48	124	56	123	56
		H_881LN250TC	H_881LI160D	145	66	138	63	157	71	156	71
		H_882LN140TC	H_882LI90D	166	75	163	74	182	83	–	–
		H_882LN180TC	H_882LI100D	195	88	180	82	199	90		
		–	H_882LI112D	198	90	184	83	203	92		
		H_882LN210TC	H_882LI132D	217	98	202	92	221	100		
		H_882LN250TC	H_882LI160D	268	122	254	115	273	124		
		H_883LN56C	–	165	75	159	72	178	81		
		–	H_883LI80D	186	84	171	78	190	86		
		H_883LN140TC	H_883LI90D	186	84	171	78	190	86		
		H_883LN180TC	H_883LI100D	197	89	182	83	201	91		
		–	H_883LI112D	200	91	185	84	204	93		
		H_883LN210TC	H_883LI132D	219	99	204	93	223	101		
		H_884LN56C	H_884LI71D	190	86	176	80	195	88		
		–	H_884LI80D	202	92	188	85	207	94		
		H_884LN140TC	H_884LI90D	202	92	188	85	207	94		
		H_884LN180TC	H_884LI100D	208	94	194	88	213	97		
		–	H_884LI112D	216	98	202	92	221	100		
		H_885LN56C	H_885LI71D	215	98	201	91	220	100		
		–	H_885LI80D	227	103	213	97	232	105		
		H_885LN140TC	H_885LI90D	227	103	213	97	232	105		
		H_885LN180TC	H_885LI100D	238	108	224	102	243	110		
		–	H_885LI112D	241	109	227	103	246	112		

* Weights are approximate

(L) – See footnotes page on the inside back cover

Weights – ILH88
(cont.)

Unit size	Input configuration	Catalog number NEMA	Catalog number IEC	Output configuration: Foot mounted Weight (lbs) (L)	Foot mounted Weight (Kg) (L)	Flange mounted B14 Weight (lbs) (L)	B14 Weight (Kg) (L)	B5 Weight (lbs) (L)	B5 Weight (Kg) (L)	NEMA (Single reduction) Weight (lbs) (L)	NEMA (Single reduction) Weight (Kg) (L)
88 (cont.)	Separate group (inch / metric)	H_881SI90	H_881SM90	81	37	74	34	93	42	92	42
		H_881SI100	H_881SM100	88	40	80	36	99	45	98	44
		H_881SI112	H_881SM112	95	43	88	40	107	49	106	48
		H_881SI132	H_881SM132	114	52	106	48	125	57	124	56
		H_881SI160	H_881SM160	139	63	132	60	151	68	150	68
		H_882SI90	H_882SM90	189	86	176	80	195	88	–	–
		H_882SI100	H_882SM100	196	89	182	83	201	91		
		H_882SI112	H_882SM112	200	91	185	84	204	93		
		H_882SI132	H_882SM132	221	100	207	94	226	102		
		H_882SI160	H_882SM160	244	111	229	104	248	112		
		H_883SI71	H_883SM71	182	83	167	76	186	84		
		H_883SI80	H_883SM80	189	86	175	79	194	88		
		H_883SI90	H_883SM90	190	86	175	79	194	88		
		H_883SI100	H_883SM100	198	90	184	83	203	92		
		H_883SI112	H_883SM112	202	92	187	85	206	93		
		H_883SI132	H_883SM132	225	102	211	96	230	104		
		H_884SI71	H_884SM71	184	84	170	77	189	86		
		H_884SI80	H_884SM80	193	88	179	81	198	90		
		H_884SI90	H_884SM90	193	88	179	81	198	90		
		H_884SI100	H_884SM100	199	90	185	84	204	93		
		H_884SI112	H_884SM112	207	94	193	88	212	96		
		H_885SI71	H_885SM71	214	97	200	91	219	99		
		H_885SI80	H_885SM80	221	100	207	94	226	103		
		H_885SI90	H_885SM90	222	101	208	94	227	103		
		H_885SI100	H_885SM100	230	104	216	98	235	107		
		H_885SI112	H_885SM112	235	107	221	100	240	109		
	Integral gearmotor (Hp)	**H_881GH90H4**	–	90	41	82	37	101	46	100	45
		H_882GH90I4		95	43	87	39	106	48	105	48
		H_882GH100J4		104	47	96	44	115	52	114	52
		H_882GH112L4		131	59	123	56	142	64	141	64
		H_882GH132M4		161	73	153	69	172	78	171	78
		H_882GH132N4		172	78	164	74	183	83	182	83
		H_882GH160P4		243	110	235	107	254	115	253	115
		H_882GH160Q4		271	123	263	119	282	128	281	127
		H_882GH90H4		184	83	169	77	188	85	–	–
		H_882GH90I4		189	86	174	79	193	88		
		H_882GH100J4		196	89	181	82	200	91		
		H_882GH112L4		218	99	203	92	222	101		
		H_882GH132M4		284	129	269	122	288	131		
		H_882GH132N4		315	143	300	136	319	145		
		H_882GH160P4		396	180	381	173	400	181		
		H_882GH160Q4		454	206	439	199	458	208		
		H_883GH71C4		174	79	159	72	178	81		
		H_883GH71D4		174	79	159	72	178	81		
		H_883GH71E4		178	81	163	74	182	83		
		H_883GH80F4		178	81	163	74	182	83		
		H_883GH80G4		181	82	166	75	185	84		
		H_883GH90H4		186	84	171	78	190	86		
		H_883GH90I4		191	87	176	80	195	88		
		H_883GH100J4		198	90	183	83	202	92		
		H_883GH112L4		220	100	205	93	224	102		
		H_883GH132M4		286	130	271	123	290	132		

* Weights are approximate

(L) – See footnotes page on the inside back cover

Weights – ILH88
(cont.)

Unit size	Input configuration	Catalog number		Output configuration							
				Foot mounted		Flange mounted					
						B14		B5		NEMA (Single reduction)	
		NEMA	IEC	Weight (lbs) (L)	Weight (Kg) (L)	Weight (lbs) (L)	Weight (Kg) (L)	Weight (lbs) (L)	Weight (Kg) (L)	Weight (lbs) (L)	Weight (Kg) (L)
88 (cont.)	Integral gearmotor (Hp)	**H_884GH71C4**		185	84	171	78	190	86	–	–
		H_884GH71D4		185	84	171	78	190	86		
		H_884GH71E4		188	85	174	79	193	88		
		H_884GH80F4		192	87	178	81	197	89		
		H_884GH80G4		196	89	182	83	201	91		
		H_884GH90H4		201	91	187	85	206	93		
		H_885GH71C4		215	98	201	91	220	100		

* Weights are approximate

(L) – See footnotes page on the inside back cover

Weights – ILH108

Unit size	Input configuration	Catalog number NEMA	Catalog number IEC	Output configuration: Foot mounted Weight (lbs) (L)	Foot mounted Weight (Kg) (L)	Flange mounted B14 Weight (lbs) (L)	B14 Weight (Kg) (L)	B5 Weight (lbs) (L)	B5 Weight (Kg) (L)
108	Clamp collar	**–**	**H_1082CI112D**	278	126	256	116	294	133
		H_1082CN210TC	H_1082CI132D	289	131	267	121	305	138
		H_1082CN250TC	H_1082CI160D	310	141	289	131	327	148
		H_1082CN280TC	H_1082CI180D	330	150	309	140	347	157
		–	H_1082CI200D	333	151	311	141	349	158
		–	H_1083CI80D	277	126	256	116	294	133
		H_1082CN320TC	–						
		H_1083CN140TC	H_1083CI90D	277	126	256	116	294	133
		H_1083CN180TC	H_1083CI100D	282	128	260	118	298	135
		–	H_1083CI112D	285	129	264	120	302	137
		H_1083CN210TC	H_1083CI132D	300	136	278	126	316	143
		H_1083CN250TC	H_1083CI160D	326	148	304	138	342	155
		H_1084CN56C	H_1084CI71D	293	133	272	123	310	141
		–	H_1084CI80D	297	135	276	125	314	142
		H_1084CN140TC	H_1084CI90D	297	135	276	125	314	142
		H_1084CN180TC	H_1084CI100D	303	137	282	128	320	145
		–	H_1084CI112D	304	138	283	128	321	146
		H_1085CN56C	H_1085CI71D	319	145	298	135	336	152
		–	H_1085CI80D	323	147	302	137	340	154
		H_1085CN140TC	H_1085CI90D	323	147	302	137	340	154
		H_1085CN180TC	H_1085CI100D	327	148	306	139	344	156
		–	H_1085CI112D	330	150	309	140	347	157
	3 pc coupled	**–**	**H_1082LI112D**	301	137	280	127	318	144
		H_1082LN210TC	H_1082LI132D	318	144	296	134	334	151
		H_1082LN250TC	H_1082LI160D	364	165	343	156	381	173
		H_1082LN280TC	H_1082LI180D	414	188	392	178	430	195
		–	H_1082LI200D	427	194	405	184	443	201
		–	H_1083LI80D	294	133	272	123	310	141
		H_1083LN140TC	H_1083LI90D	294	133	272	123	310	141
		H_1083LN180TC	H_1083LI100D	305	138	283	128	321	146
		–	H_1083LI112D	309	140	289	131	327	148
		H_1083LN210TC	H_1083LI132D	329	149	307	139	345	156
		H_1083LN250TC	H_1083LI160D	380	172	358	162	396	180
		H_1084LN56C	H_1084LI71D	302	137	281	127	319	145
		–	H_1084LI80D	314	142	293	133	331	150
		H_1084LN140TC	H_1084LI90D	314	142	293	133	331	150
		H_1084LN180TC	H_1084LI100D	320	145	299	136	337	153
		–	H_1084LI112D	328	149	307	139	345	156
		H_1085LN56C	H_1085LI71D	327	148	306	139	344	156
		–	H_1085LI80D	339	154	318	144	356	161
		H_1085LN140TC	H_1085LI90D	339	154	318	144	356	161
		H_1085LN180TC	H_1085LI100D	350	159	329	149	367	166
		–	H_1085LI112D	353	160	332	151	370	168
	Separate group (inch / metric)	**H_1082SI112**	**H_1082SM112**	289	131	268	122	306	139
		H_1082SI132	H_1082SM132	309	140	287	130	325	147
		H_1082SI160	H_1082SM160	331	150	309	140	347	157
		H_1082SI180	H_1082SM180	356	161	335	152	373	169
		H_1083SI80	H_1083SM80	284	129	262	119	300	136
		H_1083SI90	H_1083SM90	284	129	263	119	301	137
		H_1083SI100	H_1083SM100	293	133	271	123	309	140
		H_1083SI112	H_1083SM112	297	135	275	125	313	142

* Weights are approximate

(L) – See footnotes page on the inside back cover

Weights – ILH108
(cont.)

Unit size	Input configuration	Catalog number NEMA	Catalog number IEC	Output configuration: Foot mounted Weight (lbs) (L)	Foot mounted Weight (Kg) (L)	Flange mounted B14 Weight (lbs) (L)	B14 Weight (Kg) (L)	B5 Weight (lbs) (L)	B5 Weight (Kg) (L)
108 (cont.)	Separate group (inch / metric) (cont.)	**H_1083SI132**	**H_1083SM132**	320	145	298	135	336	152
		H_1083SI160	H_1083SM160	346	157	320	145	358	162
		H_1084SI71	H_1084SM71	296	134	275	125	313	142
		H_1084SI80	H_1084SM80	305	138	284	129	322	146
		H_1084SI90	H_1084SM90	305	138	284	129	322	146
		H_1084SI100	H_1084SM100	311	141	290	132	328	149
		H_1084SI112	H_1084SM112	319	145	298	135	336	152
		H_1085SI71	H_1085SM71	326	148	305	138	343	156
		H_1085SI80	H_1085SM80	333	151	312	142	350	159
		H_1085SI90	H_1085SM90	334	151	313	142	351	159
		H_1085SI100	H_1085SM100	342	155	321	146	359	163
		H_1085SI112	H_1085SM112	347	157	326	148	364	165
	Integral gearmotor (Hp)	**H_1082GH112L4**	–	320	145	299	136	337	153
		H_1082GH132M4		384	174	363	165	401	182
		H_1082GH132N4		415	188	394	179	432	196
		H_1082GH160P4		492	223	470	213	508	230
		H_1082GH160Q4		549	249	528	239	566	257
		H_1082GH180R4		606	275	584	265	622	282
		H_1082GH180S4		628	285	606	275	644	292
		H_1082GH200T4		733	332	712	323	750	340
		H_1083GH80G4		288	131	267	121	305	138
		H_1083GH90H4		293	133	272	123	310	141
		H_1083GH90I4		298	135	277	126	315	143
		H_1083GH100J4		305	138	284	129	322	146
		H_1083GH112L4		328	149	307	139	345	156
		H_1083GH132M4		395	179	374	170	412	187
		H_1083GH132N4		426	193	405	184	443	201
		H_1083GH160P4		508	230	486	220	524	238
		H_1083GH160Q4		565	256	544	247	582	264
		H_1084GH71C4		297	135	276	125	314	142
		H_1084GH71D4		297	135	276	125	314	142
		H_1084GH71E4		300	136	279	127	317	144
		H_1084GH80F4		304	138	283	128	321	146
		H_1084GH80G4		308	140	287	130	325	147
		H_1084GH90H4		313	142	292	132	330	150
		H_1084GH90I4		318	144	297	135	335	152
		H_1084GH100J4		327	148	306	139	344	156
		H_1084GH112L4		354	161	333	151	371	168
		H_1085GH71C4		327	148	306	139	344	156

* Weights are approximate

(L) – See footnotes page on the inside back cover

Weights – ILH128

Unit size	Input configuration	Catalog number NEMA	Catalog number IEC	Output configuration: Foot mounted Weight (lbs) (L)	Foot mounted Weight (Kg) (L)	Flange mounted B14 Weight (lbs) (L)	B14 Weight (Kg) (L)	B5 Weight (lbs) (L)	B5 Weight (Kg) (L)
128	Clamp collar	**H_1282CN210TC**	**H_1282CI132D**	448	203	398	180	435	197
		H_1282CN250TC	H_1282CI160D	479	217	430	195	467	212
		H_1282CN280TC	H_1282CI180D	487	221	438	199	475	215
		–	H_1282CI200D	490	222	440	200	477	216
		H_1282CN320TC	–	524	238	475	215	512	232
		H_1282CN360TC	–						
		H_1283CN140TC	H_1283CI90D	447	203	398	180	435	197
		H_1283CN180TC	H_1283CI100D	452	205	402	182	439	199
		–	H_1283CI112D	455	206	405	184	442	200
		H_1283CN210TC	H_1283CI132D	471	214	422	191	459	208
		H_1283CN250TC	H_1283CI160D	496	225	446	202	483	219
		H_1283CN280TC	H_1283CI180D	515	234	465	211	502	228
		–	H_1283CI200D	517	234	468	212	505	229
		H_1284CN56C	H_1284CI71D	477	216	428	194	465	211
		–	H_1284CI80D	481	218	432	196	469	213
		H_1284CN140TC	H_1284CI90D	481	218	432	196	469	213
		H_1284CN180TC	H_1284CI100D	486	220	437	198	474	215
		–	H_1284CI112D	488	221	439	199	476	216
		H_1284CN210TC	H_1284CI132D	502	228	453	205	490	222
		H_1285CN56C	H_1285CI71D	485	220	436	198	473	214
		–	H_1285CI80D	489	222	440	199	477	216
		H_1285CN140TC	H_1285CI90D	489	222	440	199	477	216
		H_1285CN180TC	H_1285CI100D	493	223	444	201	491	218
		–	H_1285CI112D	496	225	447	203	484	219
	3 pc coupled	**H_1282LN210TC**	**H_1282LI132D**	477	216	427	194	464	210
		H_1282LN250TC	H_1282LI160D	533	242	484	220	521	236
		H_1282LN280TC	H_1282LI180D	571	259	521	236	558	253
		–	H_1282LI200D	584	265	534	242	571	259
		H_1282LN320TC	H_1282LI225D	689	312	640	290	677	307
		H_1283LN140TC	H_1283LI90D	464	210	414	188	451	205
		H_1283LN180TC	H_1283LI100D	475	215	425	193	462	210
		–	H_1283LI112D	478	217	429	195	466	211
		H_1283LN210TC	H_1283LI132D	500	227	451	205	488	221
		H_1283LN250TC	H_1283LI160D	549	249	500	227	537	244
		H_1283LN280TC	H_1283LI180D	598	271	549	249	586	266
		–	H_1283LI200D	611	277	562	255	599	272
		H_1284LN56C	H_1284LI71D	485	220	436	198	473	214
		–	H_1284LI80D	497	225	448	203	485	220
		H_1284LN140TC	H_1284LI90D	497	225	448	203	485	220
		H_1284LN180TC	H_1284LI100D	504	228	455	206	492	223
		–	H_1284LI112D	512	232	463	210	500	227
		H_1284LN210TC	H_1284LI132D	520	236	471	214	508	230
		H_1285LN56C	H_1285LI71D	493	223	444	201	481	218
		–	H_1285LI80D	505	229	456	207	493	223
		H_1285LN140TC	H_1285LI90D	505	229	456	207	493	223
		H_1285LN180TC	H_1285LI100D	516	234	467	212	504	228
		–	H_1285LI112D	519	235	470	213	507	230
	Separate group (inch / metric)	**H_1282SI132**	H_1282SM132	467	212	418	190	455	206
		H_1282SI160	H_1282SM160	500	227	450	204	487	221
		H_1282SI180	H_1282SM180	513	233	464	210	501	227
		H_1282SI225	H_1282SM225	576	261	527	239	564	256
		H_1283SI90	H_1283SM90	454	206	405	184	442	200
		H_1283SI100	H_1283SM100	463	210	414	188	451	205
		H_1283SI112	H_1283SM112	466	211	417	189	454	206

* Weights are approximate

(L) – See footnotes page on the inside back cover

Weights – ILH128
(cont.)

Unit size	Input configuration	Catalog number NEMA	Catalog number IEC	Output configuration: Foot mounted Weight (lbs) (L)	Foot mounted Weight (Kg) (L)	Flange mounted B14 Weight (lbs) (L)	B14 Weight (Kg) (L)	B5 Weight (lbs) (L)	B5 Weight (Kg) (L)
128 (cont.)	Separate group (inch / metric) (cont.)	**H_1283SI132**	**H_1283SM132**	491	223	442	200	479	217
		H_1283SI160	H_1283SM160	516	234	467	212	504	229
		H_1283SI180	H_1283SM180	541	245	491	223	528	239
		H_1284SI71	H_1284SM71	480	218	431	195	468	212
		H_1284SI80	H_1284SM80	489	222	440	199	477	216
		H_1284SI90	H_1284SM90	489	222	440	199	477	216
		H_1284SI100	H_1284SM100	495	224	446	202	483	219
		H_1284SI112	H_1284SM112	503	228	454	206	491	223
		H_1284SI132	H_1284SM132	521	236	482	214	509	231
		H_1285SI71	H_1285SM71	492	223	443	201	480	218
		H_1285SI80	H_1285SM80	499	226	450	204	487	221
		H_1285SI90	H_1285SM90	500	227	451	204	488	221
		H_1285SI100	H_1285SM100	508	230	459	208	496	225
		H_1285SI112	H_1285SM112	513	233	464	210	501	227
	Integral gearmotor (Hp)	**H_1282GH132M4**	–	543	246	494	224	531	241
		H_1282GH132N4		574	260	525	238	562	255
		H_1282GH160P4		660	299	612	278	649	294
		H_1282GH160Q4		718	326	669	303	706	320
		H_1282GH180R4		762	346	713	323	750	340
		H_1282GH180S4		785	356	735	333	772	350
		H_1282GH200T4		890	404	841	381	878	398
		H_1283GH90H4		463	210	414	188	451	205
		H_1283GH90I4		468	212	419	190	456	207
		H_1283GH100J4		475	215	426	193	463	210
		H_1283GH112L4		497	225	448	203	485	220
		H_1283GH132M4		567	257	518	235	555	252
		H_1283GH132N4		598	271	548	249	585	265
		H_1283GH160P4		677	307	628	285	665	302
		H_1283GH160Q4		735	333	686	311	723	328
		H_1283GH180R4		790	358	741	336	778	353
		H_1283GH180S4		812	368	763	346	800	363
		H_1283GH200T4		918	416	869	394	906	411
		H_1284GH71C4		481	218	432	196	469	213
		H_1284GH71D4		481	218	432	196	469	213
		H_1284GH71E4		484	219	435	197	472	214
		H_1284GH80F4		488	221	439	199	476	216
		H_1284GH80G4		492	223	443	201	480	218
		H_1284GH90H4		497	225	448	203	485	220
		H_1284GH90I4		502	228	453	205	490	222
		H_1284GH100J4		511	232	462	209	499	226
		H_1284GH112L4		538	244	489	222	426	238
		H_1284GH132M4		568	258	519	235	556	252
		H_1284GH132N4		579	262	530	240	567	257
		H_1285GH71C4		493	223	444	201	481	218
		H_1285GH71D4		493	223	444	201	481	218
		H_1285GH71E4		497	225	448	203	485	220
		H_1285GH80F4		497	225	448	203	485	220
		H_1285GH80G4		500	227	451	204	488	221
		H_1285GH90H4		505	229	456	207	493	223
		H_1285GH90I4		510	231	461	209	498	226
		H_1285GH100J4		517	234	468	212	505	229
		H_1285GH112L4		539	244	490	222	527	239

* Weights are approximate

(L) – See footnotes page on the inside back cover

Weights – ILH148

Unit size	Input configuration	Catalog number NEMA	Catalog number IEC	Output configuration: Foot mounted Weight (lbs) (L)	Foot mounted Weight (Kg) (L)	Flange mounted B14 Weight (lbs) (L)	B14 Weight (Kg) (L)	B5 Weight (lbs) (L)	B5 Weight (Kg) (L)
148	Clamp collar	**H_1482CN210TC**	**H_1482CI132D**	646	293	595	270	656	298
		H_1482CN250TC	H_1482CI160D	666	302	615	279	676	307
		H_1482CN280TC	H_1482CI180D	684	310	633	287	694	315
		–	H_1482CI200D	687	312	635	288	696	316
		H_1482CN320TC	–	715	324	663	301	724	328
		H_1482CN360TC	–	765	347	713	323	774	351
		H_1483CN180TC	H_1483CI100D	654	297	602	273	663	301
		–	H_1483CI112D	655	297	604	274	665	302
		H_1483CN210TC	H_1483CI132D	670	304	619	281	680	308
		H_1483CN250TC	H_1483CI160D	693	314	641	291	702	318
		H_1483CN280TC	H_1483CI180D	711	322	660	299	721	327
		–	H_1483CI200D	714	324	662	300	723	328
		H_1483CN320TC	–	744	337	692	314	753	341
		H_1484CN56C	H_1484CI71D	670	304	619	281	680	308
		–	H_1484CI80D	674	306	623	283	684	310
		H_1484CN140TC	H_1484CI90D	674	306	623	283	684	310
		H_1484CN180TC	H_1484CI100D	679	308	628	285	689	313
		–	H_1484CI112D	681	309	630	286	691	313
		H_1484CN210TC	H_1484CI132D	695	315	644	292	705	320
		H_1485CN56C	H_1485CI71D	678	308	627	284	688	312
		–	H_1485CI80D	682	309	631	286	692	314
		H_1485CN140TC	H_1485CI90D	682	309	631	286	692	314
		H_1485CN180TC	H_1485CI100D	686	311	635	288	696	316
		–	H_1485CI112D	689	313	638	289	699	317
	3 pc coupled	**H_1482LN210TC**	**H_1482LI132D**	675	306	623	283	684	310
		H_1482LN250TC	H_1482LI160D	720	327	668	303	729	331
		H_1482LN280TC	H_1482LI180D	768	348	716	325	777	352
		–	H_1482LI200D	781	354	729	331	790	358
		H_1482LN320TC	H_1482LI225D	879	399	828	376	889	403
		H_1482LN360TC	H_1482LI250D	958	434	906	411	967	439
		H_1483LN180TC	H_1483LI100D	676	307	625	283	686	311
		–	H_1483LI112D	679	308	627	284	688	312
		H_1483LN210TC	H_1483LI132D	699	317	647	293	708	321
		H_1483LN250TC	H_1483LI160D	747	339	695	315	756	343
		–	H_1483LI180D	795	361	743	337	804	365
		H_1483LN280TC	H_1483LI200D	808	366	756	343	817	371
		H_1483LN320TC	H_1483LI225D	909	412	857	389	918	416
		H_1484LN56C	H_1484LI71D	678	308	627	284	688	312
		–	H_1484LI80D	690	313	639	290	700	318
		H_1484LN140TC	H_1484LI90D	690	313	639	290	700	318
		H_1484LN180TC	H_1484LI100D	697	316	646	293	707	321
		–	H_1484LI112D	705	320	654	297	715	324
		H_1484LN210TC	H_1484LI132D	713	323	662	300	723	328
		H_1485LN56C	H_1485LI71D	686	311	635	288	696	316
		–	H_1485LI80D	698	317	647	293	708	321
		H_1485LN140TC	H_1485LI90D	698	317	647	293	708	321
		H_1485LN180TC	H_1485LI100D	709	322	658	298	709	326
		–	H_1485LI112D	712	323	661	300	722	327
	Separate group (inch / metric)	**H_1482SI132**	**H_1482SM132**	666	302	614	278	675	306
		H_1482SI160	H_1482SM160	687	312	635	288	696	316
		H_1482SI180	H_1482SM180	710	322	659	299	720	327
		H_1482SI225	H_1482SM225	766	347	715	324	776	352
		H_1482SI250	H_1482SM250	785	356	733	332	794	360
		H_1483SI100	H_1483SM100	665	302	613	278	674	306
		H_1483SI112	H_1483SM112	667	302	615	279	676	307

* Weights are approximate

(L) – See footnotes page on the inside back cover

Weights – ILH148
(cont.)

Unit size	Input configuration	Catalog number NEMA	Catalog number IEC	Output configuration: Foot mounted Weight (lbs) (L)	Foot mounted Weight (Kg) (L)	Flange mounted B14 Weight (lbs) (L)	B14 Weight (Kg) (L)	B5 Weight (lbs) (L)	B5 Weight (Kg) (L)
148 cont	Separate group (inch / metric) (cont.)	**H_1483SI132**	**H_1483SM132**	690	313	638	289	699	317
		H_1483SI160	H_1483SM160	713	323	661	300	722	327
		H_1483SI180	H_1483SM180	738	335	686	311	747	339
		H_1483SI225	H_1483SM225	796	361	744	337	805	365
		H_1484SI71	H_1484SM71	673	305	622	282	683	310
		H_1484SI80	H_1484SM80	682	309	631	286	692	314
		H_1484SI90	H_1484SM90	682	309	631	286	692	314
		H_1484SI100	H_1484SM100	688	312	637	289	698	317
		H_1484SI112	H_1484SM112	696	316	645	293	706	320
		H_1484SI132	H_1484SM132	714	324	663	307	724	328
		H_1485SI71	H_1485SM71	685	311	634	288	695	315
		H_1485SI80	H_1485SM80	692	314	641	291	702	318
		H_1485SI90	H_1485SM90	693	314	642	291	703	319
		H_1485SI100	H_1485SM100	701	318	650	295	711	323
		H_1485SI112	H_1485SM112	706	320	655	297	716	325
	Integral gearmotor (Hp)	**H_1482GH132M4**	–	741	336	690	313	751	341
		H_1482GH132N4		773	351	721	327	782	355
		H_1482GH160P4		848	385	797	361	858	389
		H_1482GH160Q4		905	410	854	387	915	415
		H_1482GH180R4		960	435	908	412	969	439
		H_1482GH180S4		982	445	930	422	991	449
		H_1482GH200T4		1088	493	1036	470	1097	498
		H_1482GH225U4		1277	579	1226	556	1287	584
		H_1483GH100J4		677	307	625	283	686	311
		H_1483GH112L4		698	317	647	293	708	321
		H_1483GH132M4		766	347	714	324	775	351
		H_1483GH132N4		796	361	745	338	806	366
		H_1483GH160P4		875	397	823	373	884	401
		H_1483GH160Q4		932	423	880	399	941	427
		H_1483GH180R4		987	448	935	424	996	452
		H_1483GH180S4		1009	458	957	434	1018	462
		H_1483GH200T4		1115	506	1063	482	1124	510
		H_1484GH71C4		674	306	623	283	684	310
		H_1484GH71D4		674	306	623	283	684	310
		H_1484GH71E4		677	307	626	284	687	312
		H_1484GH80F4		681	309	630	286	691	313
		H_1484GH80G4		685	311	634	288	695	315
		H_1484GH90H4		690	313	639	290	700	318
		H_1484GH90I4		695	315	644	292	705	320
		H_1484GH100J4		704	319	653	296	714	324
		H_1484GH112L4		731	332	680	308	741	336
		H_1484GH132M4		761	345	710	322	771	350
		H_1485GH71C4		686	311	635	288	696	316
		H_1485GH71D4		686	311	635	288	696	316
		H_1485GH71E4		690	313	639	290	700	318
		H_1485GH80F4		690	313	639	290	700	318
		H_1485GH80G4		693	314	642	291	703	319
		H_1485GH90H4		698	317	647	293	708	321

* Weights are approximate

(L) – See footnotes page on the inside back cover

Weights – ILH168

Unit size	Input configuration	Catalog number NEMA	Catalog number IEC	Output configuration: Foot mounted Weight (lbs) (L)	Foot mounted Weight (Kg) (L)	Flange mounted B14 Weight (lbs) (L)	B14 Weight (Kg) (L)	B5 Weight (lbs) (L)	B5 Weight (Kg) (L)
168	Clamp collar	**H_1682CN210TC**	**H_1682CI132D**	1011	459	916	415	984	446
		H_1682CN250TC	H_1682CI160D	1030	467	935	424	1003	455
		H_1682CN280TC	H_1682CI180D	1048	475	952	432	1020	463
		–	H_1682CI200D	1050	476	955	433	1023	464
		H_1682CN320TC	–	1077	488	982	445	1050	476
		H_1682CN360TC	–	1127	511	1031	468	1099	498
		H_1683CN210TC	H_1683CI132D	1050	476	954	433	1022	463
		H_1683CN250TC	H_1683CI160D	1071	486	976	443	1044	473
		H_1683CN280TC	H_1683CI180D	1090	494	994	451	1062	482
		–	H_1683CI200D	1092	495	997	452	1065	483
		H_1683CN320TC	–	1121	508	1026	465	1094	496
		H_1683CN360TC	–	1172	532	1077	488	1145	519
		H_1684CN56C	H_1684CI71D	1098	498	1002	454	1070	485
		–	H_1684CI80D	1102	500	1006	456	1074	487
		H_1684CN140TC	H_1684CI90D	1102	500	1006	456	1074	487
		H_1684CN180TC	H_1684CI100D	1107	502	1011	459	1079	489
		–	H_1684CI112D	1109	503	1013	459	1081	490
		H_1684CN210TC	H_1684CI132D	1123	509	1027	466	1095	497
		H_1685CN56C	H_1685CI71D	1139	517	1043	473	1111	504
		–	H_1685CI80D	1143	518	1047	475	1115	506
		H_1685CN140TC	H_1685CI90D	1143	518	1047	475	1115	506
		H_1685CN180TC	H_1685CI100D	1148	521	1052	477	1120	508
		–	H_1685CI112D	1150	522	1054	478	1122	509
		H_1685CN210TC	H_1685CI132D	1164	528	1068	484	1136	515
	3 pc coupled	**H_1682LN210TC**	**H_1682LI132D**	1040	472	944	428	1012	459
		H_1682LN250TC	H_1682LI160D	1084	492	989	449	1057	479
		H_1682LN280TC	H_1682LI180D	1131	513	1036	470	1104	501
		–	H_1682LI200D	1145	519	1049	476	1117	507
		H_1682LN320TC	H_1682LI225D	1242	563	1147	520	1215	551
		H_1682LN360TC	H_1682LI250D	1320	599	1225	556	1293	586
		H_1683LN210TC	H_1683LI132D	1078	489	983	446	1051	477
		H_1683LN250TC	H_1683LI160D	1125	510	1030	467	1098	498
		H_1683LN280TC	H_1683LI180D	1173	532	1078	489	1146	520
		–	H_1683LI200D	1186	538	1091	495	1159	526
		H_1683LN320TC	H_1683LI225D	1286	583	1191	540	1259	571
		H_1683LN360TC	H_1683LI250D	1366	620	1270	576	1338	607
		H_1684LN56C	H_1684LI71D	1106	502	1010	458	1078	489
		–	H_1684LI80D	1118	507	1022	464	1090	494
		H_1684LN140TC	H_1684LI90D	1118	507	1022	464	1090	494
		H_1684LN180TC	H_1684LI100D	1125	510	1029	467	1097	498
		–	H_1684LI112D	1133	514	1037	470	1105	501
		H_1684LN210TC	H_1684LI132D	1141	518	1045	474	1113	505
		H_1685LN56C	H_1685LI71D	1147	520	1051	477	1119	508
		–	H_1685LI80D	1160	526	1064	483	1132	513
		H_1685LN140TC	H_1685LI90D	1171	531	1075	488	1143	518
		H_1685LN180TC	H_1685LI100D	1174	533	1078	489	1146	520
		–	H_1685LI112D	1193	541	1097	498	1165	528
	Separate group (inch / metric)	**H_1682SI132**	**H_1682SM132**	1031	468	935	424	1003	455
		H_1682SI160	H_1682SM160	1050	476	955	433	1023	464
		H_1682SI180	H_1682SM180	1074	487	979	444	1047	475
		H_1682SI225	H_1682SM225	1129	512	1034	469	1102	500
		H_1682SI250	H_1682SM250	1147	520	1052	477	1120	508
		H_1683SI132	H_1683SM132	1069	485	974	442	1042	473
		H_1683SI160	H_1683SM160	1091	495	996	452	1064	483

* Weights are approximate

(L) – See footnotes page on the inside back cover

Weights – ILH168
(cont.)

Unit size	Input configuration	Catalog number NEMA	Catalog number IEC	Output configuration: Foot mounted Weight (lbs) (L)	Foot mounted Weight (Kg) (L)	Flange mounted B14 Weight (lbs) (L)	B14 Weight (Kg) (L)	B5 Weight (lbs) (L)	B5 Weight (Kg) (L)
168 (cont.)	Separate group (inch / metric) (cont.)	**H_1683SI180**	**H_1683SM180**	1116	506	1020	463	1088	493
		H_1683SI225	H_1683SM225	1173	532	1078	489	1146	520
		H_1683SI250	H_1683SM250	1193	541	1097	498	1165	528
		H_1684SI71	H_1684SM71	1101	499	1005	456	1073	487
		H_1684SI80	H_1684SM80	1110	503	1014	460	1082	491
		H_1684SI90	H_1684SM90	1110	503	1014	460	1082	491
		H_1684SI100	H_1684SM100	1116	506	1020	463	1088	494
		H_1684SI112	H_1684SM112	1124	510	1028	466	1096	497
		H_1684SI132	H_1684SM132	1142	518	1046	474	1114	505
		H_1685SI71	H_1685SM71	1148	521	1052	477	1120	508
		H_1685SI80	H_1685SM80	1156	524	1060	481	1128	512
		H_1685SI90	H_1685SM90	1156	524	1060	481	1128	512
		H_1685SI100	H_1685SM100	1165	528	1069	485	1137	516
		H_1685SI112	H_1685SM112	1168	530	1072	486	1140	517
		H_1685SI132	H_1685SM132	1189	539	1093	496	1161	527
	Integral gearmotor (Hp)	**H_1682GH132M4**	–	1106	502	1011	459	1079	489
		H_1682GH132N4		1137	516	1042	473	1110	503
		H_1682GH160P4		1212	550	1116	506	1184	537
		H_1682GH160Q4		1269	576	1174	532	1242	563
		H_1682GH180R4		1323	600	1228	557	1296	588
		H_1682GH180S4		1345	610	1250	567	1318	598
		H_1682GH200T4		1451	658	1356	615	1424	646
		H_1682GH225U4		1640	744	1545	701	1613	732
		H_1683GH132M4		1145	519	1050	476	1118	507
		H_1683GH132N4		1176	533	1080	490	1148	521
		H_1683GH160P4		1253	568	1157	525	1225	556
		H_1683GH160Q4		1310	594	1215	551	1283	582
		H_1683GH180R4		1365	619	1269	576	1337	606
		H_1683GH180S4		1387	629	1291	585	1359	616
		H_1683GH200T4		1493	677	1397	634	1465	664
		H_1684GH71C4		1102	500	1006	456	1074	487
		H_1684GH71D4		1102	500	1006	456	1074	487
		H_1684GH71E4		1105	501	1009	458	1077	489
		H_1684GH80F4		1109	503	1013	459	1081	490
		H_1684GH80G4		1113	505	1017	461	1085	492
		H_1684GH90H4		1118	507	1022	464	1090	494
		H_1684GH90I4		1123	509	1027	466	1095	497
		H_1684GH100J4		1132	513	1036	470	1104	501
		H_1684GH112L4		1159	526	1063	482	1131	513
		H_1684GH132M4		1189	539	1093	496	1161	527
		H_1684GH132N4		1200	544	1104	501	1172	532
		H_1685GH71C4		1147	520	1051	477	1119	508
		H_1685GH71D4		1147	520	1051	477	1119	508
		H_1685GH71E4		1151	522	1055	479	1123	509
		H_1685GH80F4		1151	522	1055	479	1123	509
		H_1685GH80G4		1154	523	1058	480	1126	511
		H_1685GH90H4		1159	526	1063	482	1131	513

* Weights are approximate

(L) – See footnotes page on the inside back cover

Notes

Notes

Notes

Right-Angle Helical Bevel (RHB)

RHB Table of Contents

RHB-2 **Nomenclature**
RHB-6 **Mounting Positions and Oil Quantities**
RHB-16 **Overhung Loads**
RHB-18 **RHB Selection - 60 Hz**
RHB-18 RHB 38
RHB-21 RHB 48
RHB-27 RHB 58
RHB-30 RHB 68
RHB-36 RHB 88
RHB-42 RHB 108
RHB-48 RHB 128
RHB-54 RHB 148
RHB-60 RHB 168
RHB-66 **RHB Integral Gearmotors - 60 Hz**
RHB-104 **RHB Dimensions Outline**
RHB-108 **Dimensions**
RHB-204 Optional output shafts
RHB-206 Twin-tapered bushings
RHB-211 Screw-conveyor adapter
RHB-213 Shrink disk – foot mounted – metric
RHB-215 Q-Loc bushing
RHB-216 Stainless steel – C-face – solid shaft
RHB-217 Stainless steel – C-face – straight hollow bore
RHB-218 Stainless steel – C-face – Q-loc bushing
RHB-219 **Thermal Ratings**
RHB-228 **Weights**

Nomenclature

Right-angle helical bevel (RHB)

Triple, four- and five-stage reduction

	1	2	3	4	5	6	7	/	8	9	9a	10	10a	10b	11	11a	11b	12	13	13a	13b	14
Ex	B	B	48	4	L	N	56C	/	636.22	A1	A	S	I	1.25	–	–	–	–	–	–	–	
Ex:	B	F	38	3	G	H	80F4	/	9.72	A1	–	H	I	1.25	B5	160 mm	A	–	–	–	–	D6
Ex:	B	F	88	3	S	I	90	/	5.54	A4	–	T	I	1.9375	B14	190 mm	AB	K	–	–	–	

1. **Product type**
   B = RHB

2. **Output configuration**
   B = Foot mounted
   F = Flange / shaft mounted

3. **Unit size**
   38 48 58 68 88
   108 128 148 168

4. **Stage of reduction**
   3 = Triple reduction
   4 = 4 stage reduction
   5 = 5 stage reduction

5. **Input configuration**
   C = C-face clamp collar
   L = C-face 3 pc coupling
   S = Separate
   G = Integral gearmotor

6. **Motor type**
   N = Nema C-face
   I = IEC C-face
   H = Integral Hp
   K = Integral kW

   Separate input
   I = Inch
   M = Metric

7. **Motor frame**

   NEMA C-face
   56C 140TC 180TC 210TC
   250TC 280TC 320TC 360TC

   IEC C-face
   71D 80D 90D 100D 112D 132D
   160D 180D 200D 225D 250D

   Separate
   71 80 90 100 112
   132 160 180 225 250

   Integral gearmotor

71C4	.25 Hp	112L4	5 Hp
71D4	.33 Hp	132M4	7.5 Hp
71E4	.50 Hp	132N4	10 Hp
80F4	.75 Hp	160P4	15 Hp
80G4	1 Hp	160Q4	20 Hp
90H4	1.5 Hp	180R4	25 Hp
90I4	2 Hp	180S4	30 Hp
100J4	3 Hp	200T4	40 Hp

8. **Ratio** **(use actual ratios from selection pages)**

9. **Mounting positions** **(see page RHB-6 through RHB-11)**
   A1 A2 A3
   A4 A5 A6

9a. **Output shaft position**
   A B AB

10. **Output shaft type**
   S = Single extension solid shaft
   D = Double extension solid shaft
   H = Straight hollow bore
   T = Tapered hollow bore
   C = Shrink disk
   Q = Q-Loc keyless bushing

RHB

Triple, four- and five-stage reduction (cont.)

	1	2	3	4	5	6	7	/	8	9	9a	10	10a	10b	11	11a	11b	12	13	13a	13b	14
Ex	B	B	48	4	L	N	56C	/	636.22	A1	A	S	I	1.25	–	–	–	–	–	–	–	
Ex:	B	F	38	3	G	H	80F4	/	9.72	A1	–	H	I	1.25	B5	160 mm	A	–	–	–	–	D6
Ex:	B	F	88	3	S	I	90	/	5.54	A4	–	T	I	1.9375	B14	190 mm	AB	K	–	–	–	

10a. Output shaft dimension

I = Inch

M = Metric

10b. Output shaft diameter

Single / double extension solid shaft

	Std	Optional	Std	Optional
RHB 38	1.000”	1.375”	25 mm	35 mm
RHB 48	1.250”	1.625”	30 mm	40 mm
RHB 58	1.375"	–	35 mm	–
RHB 68	1.625”	2.000”	40 mm	50 mm
RHB 88	2.000”	2.750”	50 mm	70 mm
RHB 108	2.375”	3.1875”	60 mm	80 mm
RHB 128	2.875”	3.625”	70 mm	90 mm
RHB 148	3.625”	4.000”	90 mm	100 mm
RHB 168	4.375”	4.750”	110 mm	120 mm

Straight hollow bore

	Std	Optional	Std	Optional
RHB 38	1.250”	–	30 mm	–
RHB 48	1.375”	1.250”	35 mm	40 mm
RHB 58	1.500"	1.4375"	40 mm	–
RHB 68	1.500”	1.4375”	40 mm	45 mm
RHB 88	2.000”	1.9375”	50 mm	60 mm
RHB 108	2.375”	2.4375”	60 mm	70 mm
RHB 128	2.750”	2.9375”	70 mm	80 mm
RHB 148	3.625”	3.4375”	80 mm	90 mm
RHB 168	4.000”	3.9375”	100 mm	110 mm

Shrink disk

RHB 38	30 mm	RHB 108	70 mm
RHB 48	40 mm	RHB 128	80 mm
RHB 58	--	RHB 148	95 mm
RHB 68	50 mm	RHB 168	105 mm
RHB 88	60 mm		

Tapered hollow (see pages RHB-199 to RHB-203)

Q-Loc keyless bushing (see page RHB-208)

11. Output flange type (BF style housing)

B5

B14 (STD)

11a. Output flange diameter

	B5 flange	B14 flange
RHB 38	160 mm	120 mm
RHB 48	200 mm	132 mm
RHB 58	250 mm	150 mm
RHB 68	250 mm	150 mm
RHB 88	300 mm	190 mm
RHB 108	350 mm	245 mm
RHB 128	450 mm	295 mm
RHB 148	450 mm	335 mm
RHB 168	550 mm	400 mm

11b. Output flange position

A B AB

12. Torque-Arm option (BF style housing)

K = Torque-Arm bracket

KR = Tie rod kit

KT = Banjo Torque-Arm

13. Screw conveyor drive

(RHB 38 - 128 - BF style housing)

SCS = Screw conveyor with drive shaft

SCN = Screw conveyor - no drive shaft

13a. Screw conveyor drive shaft diameter

RHB 38	1.500”	2.000"	2.4375"	
RHB 48	1.500”	2.000”	2.4375"	
RHB 58	1.500"	2.000"		
RHB 68	1.500”	2.000”	2.4375”	3.000"
RHB 88	2.000”	2.4375”	3.000”	
RHB 108	2.000”	2.4375”	3.000”	3.4375"
RHB 128	2.000”	2.4375”	3.000”	3.4375”

13b. Screw conveyor adapter

S = Standard

XT = Harsh duty

14. Integral motor brake options

See page ENG-23

RHB Food Safe

Triple reduction

	1	2	3	4	5	6	7	/	8	9	9a	10	10a	10b	11	11a	11b	12	13	13a	13b	14
Ex:	B	U	48	3	C	N	140TC	/	33.6	A1	–	H	I	1.375x5.91	B14	132 mm	AB	KTS	–	–	–	
Ex:	B	U	38	3	C	N	56C	/	9.72	A1	A	S	I	1.000x1.97	B5	160 mm	A	–	–	–	–	

1. Product type

B = RHB

2. Output configuration

U= Food Safe
(only applies to size 38 and 48 clamp collar).

3. Unit size

38 48

4. Stage of reduction

3 = Triple reduction

5. Input configuration

C = C-face clamp collar

6. Motor type

N = Nema C-face

I = IEC C-face

7. Motor frame

NEMA C-face

56C 140TC 180TC

IEC C-face

71D 80D 90D 100D

8. Ratio (use actual ratios from selection pages)

RHB 38	5.65	- 179.13
RHB 48	7.22	- 169.53

9. Mounting positions (see page RHB-12)

A1	A2	A3
A4	A5	A6

9a. Output shaft position

A B AB

10. Output shaft type

S = Single extension solid shaft

H = Straight hollow bore

Q = Q-Loc keyless bushing

10a. Output shaft dimension

I = Inch

M = Metric

10b. Output shaft diameter

Single extension solid shaft

Std		Optional	Std	Optional
RHB 38	1.000”	1.375”	25 mm	35 mm
RHB 48	1.250”	1.625”	30 mm	40 mm

Hollow bore

Std		Optional	Std	Optional
RHB 38	1.250”	--	30 mm	--
RHB 48	1.375”	1.250”	35 mm	40 mm

Q-Loc keyless bushing

RHB 38	1.000
RHB 48	1.000
	1.125
	1.250
	1.375
	1.4375

(Continued on next page)

RHB Food Safe

Triple reduction (cont.)

	1	2	3	4	5	6	7	/	8	9	9a	10	10a	10b	11	11a	11b	12	13	13a	13b	14
Ex:	B	U	48	3	C	N	140TC	/	33.6	A1	–	H	I	1.375x5.91	B14	132 mm	AB	KTS	–	–	–	
Ex:	B	U	38	3	C	N	56C	/	9.72	A1	A	S	I	1.000x1.97	B5	160 mm	A	–	–	–	–	

11. Output flange type (BF style housing)

B5

B14 (std)

11a. Output flange diameter (BF style housing)

	B5 flange	B14 flange
RHB 38	160 mm	120 mm
RHB 48	200 mm	132 mm

11b. Output flange position

A B

12. Torque-Arm option (BF style housing)

KTS = Banjo Torque-Arm

Mounting Positions and Oil Quantities

RHB C-face reducers and integral gearmotors

These mounting arrangements are for all output configurations and output shaft types **IMPORTANT! When ordering, please specify mounting position for correct oil quantity.** In cases of mounting position other than shown here with regard to the oil quantity, please reference the Incline Mounting page, INTRO-24, and contact Application Engineering.

NOTE: The oil volumes shown are approximate values and cannot be used to correctly set the reducer oil level - **ALWAYS** fill the reducer to the correct oil level plug and recheck in 1 week.

A1

Unit size	Reduction stage	Pints	Liters
38	3	1.0	0.5
48	3	1.5	0.7
58	3	2.3	1.1
68	3	2.7	1.3
88	3	4.7	2.2
108	3	11.7	5.5
128	3	17.5	8.3
148	3	31.2	14.8
168	3	45.8	21.7

Oil level Ventilation Oil drain

A1 Horizontal – floor mount

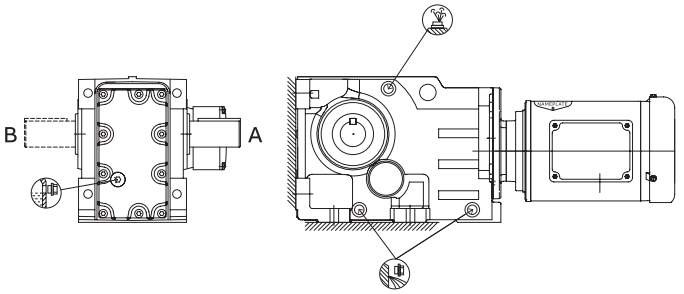

A1

Unit size	Reduction stage	Input reducer pints	Input reducer liters	Primary reducer pints	Primary reducer liters
48	4	0.3	0.2	1.5	0.7
	5	1.1	0.5	1.5	0.7
68	4	0.3	0.2	2.7	1.3
	5	1.1	0.5	2.7	1.3
88	4	0.5	0.3	4.7	2.2
	5	2.3	1.1	4.7	2.2
108	4	0.5	0.3	11.7	5.5
	5	2.3	1.1	11.7	5.5
128	4	0.5	0.5	17.5	8.3
	5	2.3	1.1	17.5	8.3
148	4	1.1	0.5	31.2	14.8
	5	2.3	1.1	31.2	14.8
168	4	1.1	0.5	45.8	21.7
	5	3.8	1.8	45.8	21.7

A1 High ratio – horizontal – floor mount

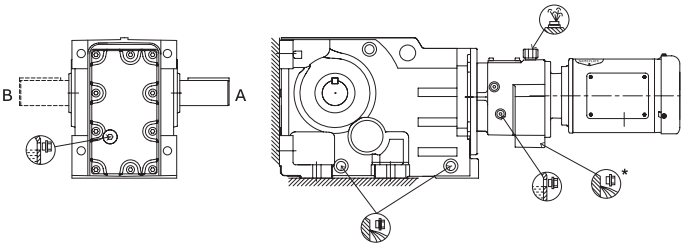

Notes: All RHB 38 units are sealed for life and furnished with only one plug for filling and draining.

Four- and five-stage reduction reducer consists of two reducers assembled to each other, the Input Reducer and the Primary Reducer.
The reducers are sealed from each other and require different oil levels per the chart.

* Hole location on opposite side of reducer.

RHB mounting positions and oil quantities

C-face reducers and integral gearmotors

These mounting arrangements are for all output configurations and output shaft types **IMPORTANT! When ordering, please specify mounting position for correct oil quantity.** In cases of mounting position other than shown here with regard to the oil quantity, please reference the Incline Mounting page, INTRO-24, and contact Application Engineering.

NOTE: The oil volumes shown are approximate values and cannot be used to correctly set the reducer oil level - **ALWAYS** fill the reducer to the correct oil level plug and recheck in 1 week.

A2

Unit size	Reduction stage	Pints	Liters
38	3	1.8	0.8
48	3	2.5	1.2
58	3	4.2	2.0
68	3	5.1	2.4
88	3	9.7	4.6
108	3	17.6	8.3
128	3	31.2	14.8
148	3	47.3	22.4
168	3	73.6	34.8

A2

Unit size	Reduction stage	Input reducer pints	Input reducer liters	Primary reducer pints	Primary reducer liters
48	4	1.2	0.6	2.5	1.2
	5	2.5	1.2	2.5	1.2
68	4	1.2	0.6	5.1	2.4
	5	2.5	1.2	5.1	2.4
88	4	2.2	1.1	9.7	4.6
	5	5.1	2.4	9.7	4.6
108	4	2.2	1.1	17.6	8.3
	5	5.1	2.4	17.6	8.3
128	4	2.2	1.1	31.2	14.8
	5	5.1	2.4	31.2	14.8
148	4	3.9	1.9	47.3	22.4
	5	5.1	2.4	47.3	22.4
168	4	3.9	1.9	73.6	34.8
	5	8.7	4.1	73.6	34.8

Shaded A2 mounting is not a recommended mounting position for continuous duty applications due to the weight of oil on the high speed input seal. A2 is not recommended for input speeds above 1750 RPM. A2 mounting can be used for intermittent duty applications.

Oil level Ventilation Oil drain

A2 Vertical wall mount – motor shaft up

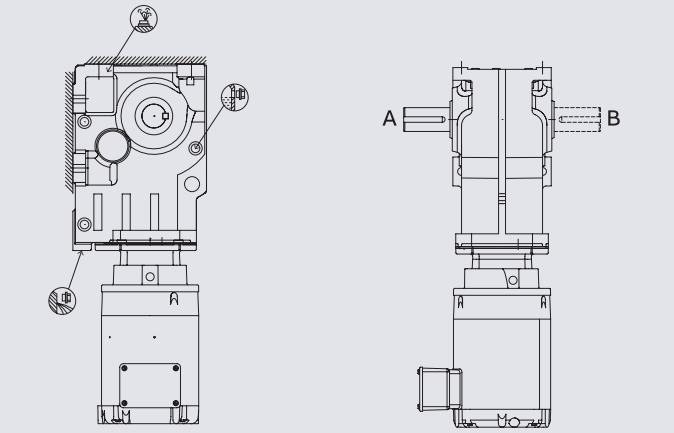

A2 High ratio – vertical mount – motor shaft up

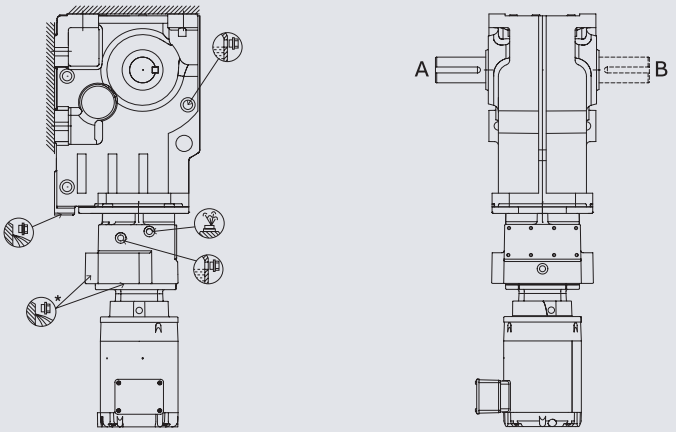

Notes: A2 is also not recommended for input speeds above 1750 RPM. A2 can be used for intermittent duty applications.

All RHB 38 units are sealed for life and furnished with only one plug for filling and draining.

Four- and five-stage reduction reducer consists of two reducers assembled to each other, the Input Reducer and the Primary Reducer. The reducers are sealed from each other and require different oil levels per the chart.

* Hole location on opposite side of reducer.

RHB mounting positions and oil quantities

C-face reducers and integral gearmotors

These mounting arrangements are for all output configurations and output shaft types **IMPORTANT! When ordering, please specify mounting position for correct oil quantity.** In cases of mounting position other than shown here with regard to the oil quantity, please reference the Incline Mounting page, INTRO-24, and contact Application Engineering.

NOTE: The oil volumes shown are approximate values and cannot be used to correctly set the reducer oil level - **ALWAYS** fill the reducer to the correct oil level plug and recheck in 1 week.

A3

Unit size	Reduction stage	Pints	Liters
38	3	2.3	1.1
48	3	3.6	1.7
58	3	4.6	2.2
68	3	6.2	2.9
88	3	12.8	6.1
108	3	20.9	9.9
128	3	41.4	19.6
148	3	63.7	30.2
168	3	97.8	46.3

Oil level Ventilation Oil drain

A3 Horizontal – ceiling mount

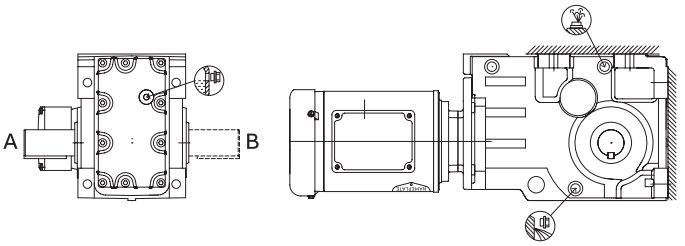

A3

Unit size	Reduction stage	Input reducer pints	Input reducer liters	Primary reducer pints	Primary reducer liters
48	4	0.8	0.4	3.6	1.7
	5	1.3	0.6	3.6	1.7
68	4	0.8	0.4	6.2	2.9
	5	1.3	0.6	6.2	2.9
88	4	1.5	0.7	12.8	6.1
	5	3.2	1.5	12.8	6.1
108	4	1.5	0.7	20.9	9.9
	5	3.2	1.5	20.9	9.9
128	4	1.5	0.7	41.4	19.6
	5	3.2	1.5	41.4	19.6
148	4	3.1	1.5	63.7	30.2
	5	3.2	1.5	63.7	30.2
168	4	3.1	1.5	97.8	46.3
	5	5.3	2.5	97.8	46.3

A3 High ratio – horizontal – ceiling mount

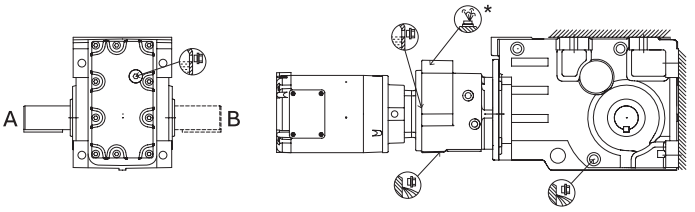

Notes: All RHB 38 units are sealed for life and furnished with only one plug for filling and draining.

Four- and five-stage reduction reducer consists of two reducers assembled to each other, the Input Reducer and the Primary Reducer.

The reducers are sealed from each other and require different oil levels per the chart.

* Hole location on opposite side of reducer.

RHB mounting positions and oil quantities

C-face reducers and integral gearmotors

These mounting arrangements are for all output configurations and output shaft types **IMPORTANT! When ordering, please specify mounting position for correct oil quantity.** In cases of mounting position other than shown here with regard to the oil quantity, please reference the Incline Mounting page, INTRO-24, and contact Application Engineering.

NOTE: The oil volumes shown are approximate values and cannot be used to correctly set the reducer oil level - **ALWAYS** fill the reducer to the correct oil level plug and recheck in 1 week.

A4

Unit size	Reduction stage	Pints	Liters
38	3	3.1	1.5
48	3	4.9	2.3
58	3	5.9	2.8
68	3	8.2	3.9
88	3	16.3	7.7
108	3	29.3	13.9
128	3	53.7	25.4
148	3	86.7	41.0
168	3	132.3	62.6

Oil level Ventilation Oil drain

A4 Vertical wall mount – motor shaft down

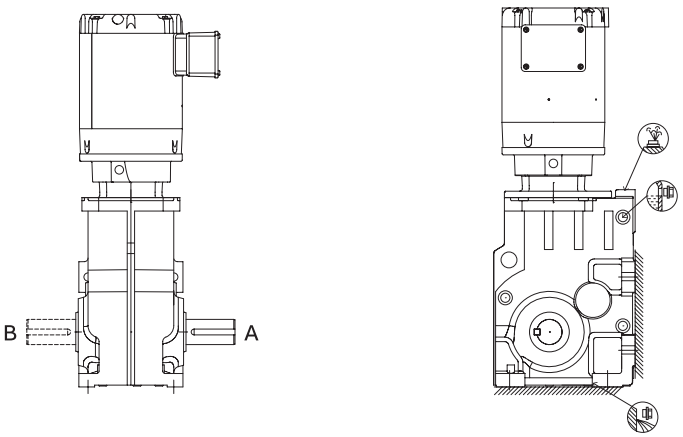

A4

Unit size	Reduction stage	Input reducer pints	Input reducer liters	Primary reducer pints	Primary reducer liters
48	4	1	0.5	4.9	2.3
	5	1.5	0.7	4.9	2.3
68	4	1	0.5	8.2	3.9
	5	1.5	0.7	8.2	3.9
88	4	1	0.5	16.3	7.7
	5	1.5	0.7	16.3	7.7
108	4	1.5	0.7	29.3	13.9
	5	3.8	1.8	29.3	13.9
128	4	1.5	0.7	53.7	25.4
	5	3.8	1.8	53.7	25.4
148	4	3.7	1.8	86.7	41.0
	5	3.8	1.8	86.7	41.0
168	4	3.7	1.8	132.3	62.6
	5	6.8	3.2	132.3	62.6

** **Note:** A4 Mounting is not recommended for input speeds above 1750 RPM

A4 High ratio – Vertical wall mount – shaft down

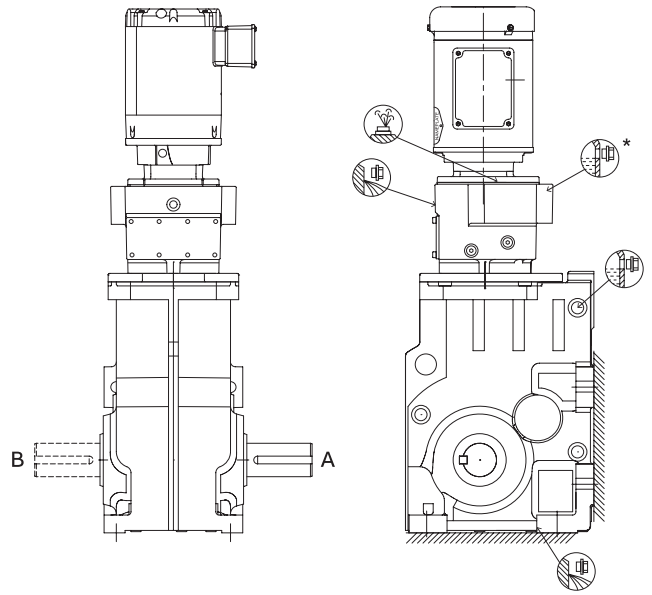

Notes: All RHB 38 units are sealed for life and furnished with only one plug for filling and draining.

Four- and five-stage reduction reducer consists of two reducers assembled to each other, the Input Reducer and the Primary Reducer. The reducers are sealed from each other and require different oil levels per the chart.

* Hole location on opposite side of reducer.

RHB mounting positions and oil quantities

C-face reducers and integral gearmotors

These mounting arrangements are for all output configurations and output shaft types **IMPORTANT! When ordering, please specify mounting position for correct oil quantity.** In cases of mounting position other than shown here with regard to the oil quantity, please reference the Incline Mounting page, INTRO-24, and contact Application Engineering.

NOTE: The oil volumes shown are approximate values and cannot be used to correctly set the reducer oil level - **ALWAYS** fill the reducer to the correct oil level plug and recheck in 1 week.

A5

Unit size	Reduction stage	Pints	Liters
38	3	2.1	1.0
48	3	3.3	1.6
58	3	4.2	2.0
68	3	5.9	2.8
88	3	10.7	5.1
108	3	19.7	9.3
128	3	36.9	17.6
148	3	54.9	26.0
168	3	86.9	41.1

Oil level Ventilation Oil drain

A5 Horizontal – wall mount

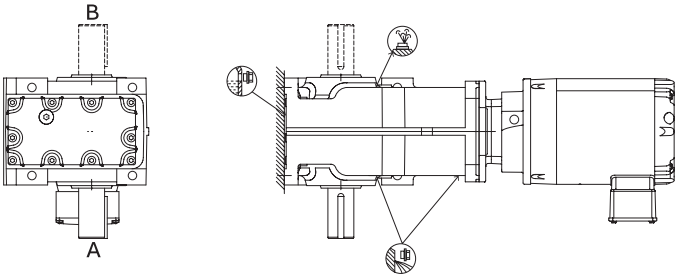

A5

Unit size	Reduction stage	Input reducer pints	Input reducer liters	Primary reducer pints	Primary reducer liters
48	4	0.5	0.3	3.3	1.6
	5	1.3	0.6	3.3	1.6
68	4	0.5	0.3	5.9	2.8
	5	1.3	0.6	5.9	2.8
88	4	0.5	0.3	10.7	5.1
	5	1.3	0.6	10.7	5.1
108	4	1.2	0.6	19.7	9.3
	5	3.4	1.6	19.7	9.3
128	4	1.2	0.6	36.9	17.6
	5	3.4	1.6	36.9	17.6
148	4	2.1	1.0	54.9	26.0
	5	3.4	1.6	54.9	26.0
168	4	2.1	1	86.9	41.1
	5	5.7	2.7	86.9	41.1

A5 High ratio – horizontal – wall mount

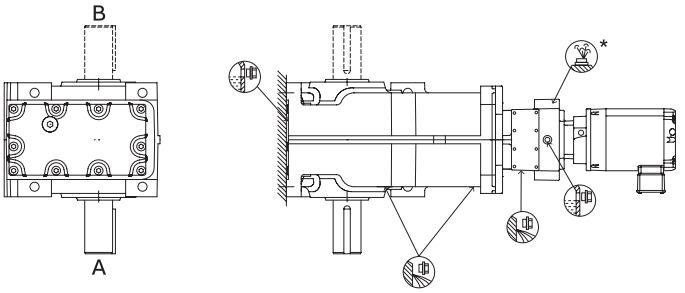

Note: All RHB 38 units are sealed for life and furnished with only one plug for filling and draining.

Four- and five-stage reduction reducer consists of two reducers assembled to each other, the Input Reducer and the Primary Reducer. The reducers are sealed from each other and require different oil levels per the chart.

* Hole location on opposite side of reducer.

RHB mounting positions and oil quantities

C-face reducers and integral gearmotors

These mounting arrangements are for all output configurations and output shaft types **IMPORTANT! When ordering, please specify mounting position for correct oil quantity.** In cases of mounting position other than shown here with regard to the oil quantity, please reference the Incline Mounting page, INTRO-24, and contact Application Engineering.

NOTE: The oil volumes shown are approximate values and cannot be used to correctly set the reducer oil level - **ALWAYS** fill the reducer to the correct oil level plug and recheck in 1 week.

A6

Unit size	Reduction stage	Pints	Liters
38	3	1.9	0.9
48	3	3.8	1.8
58	3	4.4	2.1
68	3	5.7	2.7
88	3	9.8	4.6
108	3	18.9	8.9
128	3	35.1	16.6
148	3	59.4	28.1
168	3	83.4	39.4

Oil level Ventilation Oil drain

A6 Horizontal – wall mount

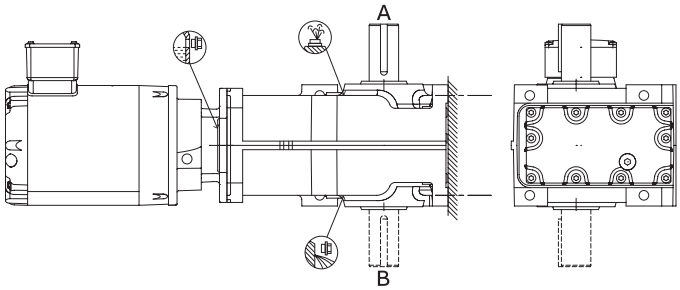

A6

Unit size	Reduction stage	Input reducer pints	Input reducer liters	Primary reducer pints	Primary reducer liters
48	4	0.5	0.3	3.8	1.8
	5	1.3	0.6	3.8	1.8
68	4	0.5	0.3	5.7	2.7
	5	1.3	0.6	5.7	2.7
88	4	1.0	0.5	9.8	4.6
	5	2.7	1.3	9.8	4.6
108	4	1.0	0.5	18.9	8.9
	5	2.7	1.3	18.9	8.9
128	4	1.0	0.5	35.1	16.6
	5	2.7	1.3	35.1	16.6
148	4	2.2	1.1	59.4	28.1
	5	2.7	1.3	59.4	28.1
168	4	2.2	1.1	83.4	39.4
	5	4.9	2.3	83.4	39.4

A6 High ratio – horizontal – wall mount

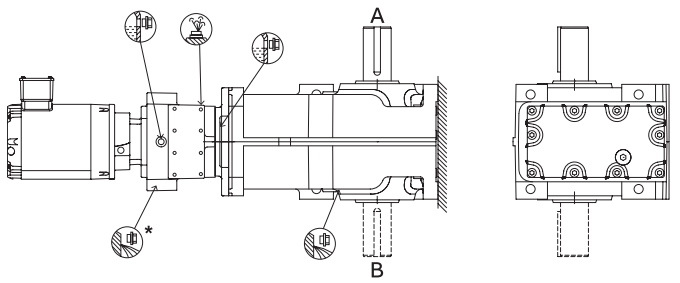

Note: All RHB 38 units are sealed for life and furnished with only one plug for filling and draining.

Four- and five-stage reduction reducer consists of two reducers assembled to each other, the Input Reducer and the Primary Reducer. The reducers are sealed from each other and require different oil levels per the chart.

* Hole location on opposite side of reducer.

RHB Food Safe

C-face reducers and integral gearmotors

These mounting arrangements are for all output configurations and output shaft types **IMPORTANT! When ordering, please specify mounting position for correct oil quantity.** In cases of mounting position other than shown here with regard to the oil quantity, please reference the Incline Mounting page, INTRO-24, and contact Application Engineering.

NOTE: The oil volumes shown are approximate values and cannot be used to correctly set the reducer oil level - **ALWAYS** fill the reducer to the correct oil level plug and recheck in 1 week.

A1

Unit size	Reduction stage	Input reducer pints	Input reducer liters
38	3	1.6	0.8
48	3	2.1	1.0

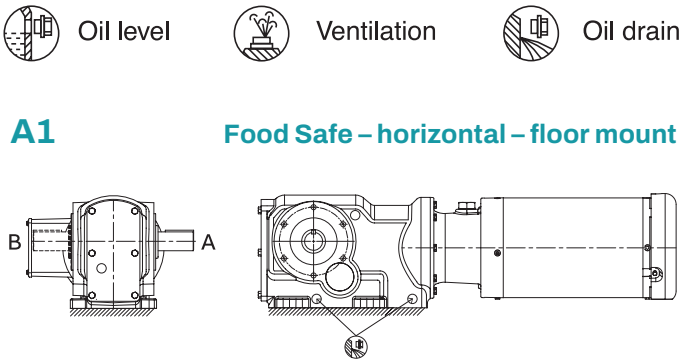

A2

Unit size	Reduction stage	Input reducer pints	Input reducer liters
38	3	3.2	1.5
48	3	5.1	2.4

Note: Shaded A2 Mounting is not a recommended mounting position for continuous duty applications, due to the weight of oil on the high speed input seal. A2 is also not recommended for input speeds above 1750 RPM. A2 can be used for intermittent duty applications.

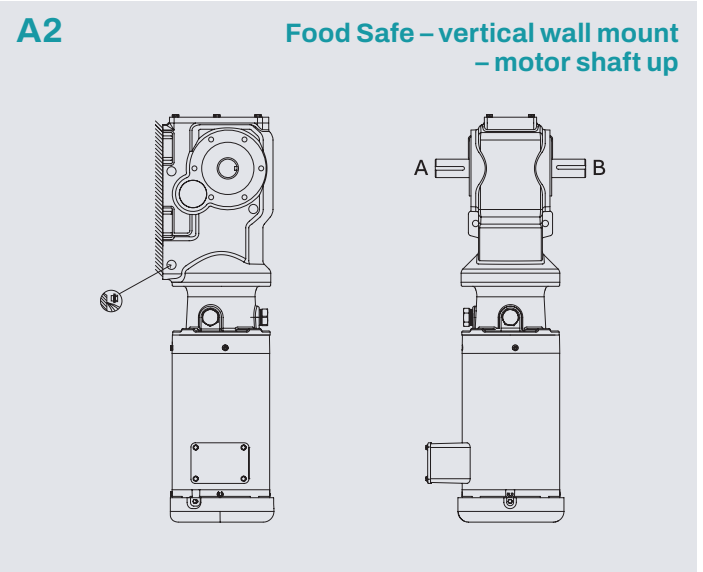

A3

Unit size	Reduction stage	Input reducer pints	Input reducer liters
38	3	3.2	1.5
48	3	5.1	2.4

Note: All RHB Food Safe 38 and 48 Units are sealed and do not require a breather.
* Hole location on opposite side of reducer.

RHB Food Safe

C-face reducers and integral gearmotors

These mounting arrangements are for all output configurations and output shaft types **IMPORTANT! When ordering, please specify mounting position for correct oil quantity.** In cases of mounting position other than shown here with regard to the oil quantity, please reference the Incline Mounting page, INTRO-24, and contact Application Engineering.

NOTE: The oil volumes shown are approximate values and cannot be used to correctly set the reducer oil level - **ALWAYS** fill the reducer to the correct oil level plug and recheck in 1 week.

A4

Unit size	Reduction stage	Input reducer pints	Input reducer liters
38	3	3.9	1.9
48	3	5.9	2.8

Note: A4 mounting is not recommended for input speeds above 1750 RPM

Oil level Ventilation Oil drain

A4 Food Safe – vertical wall – motor shaft down

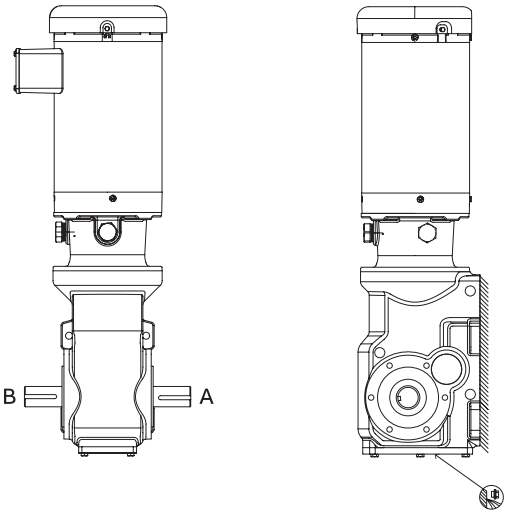

A5

Unit size	Reduction stage	Input reducer pints	Input reducer liters
38	3	3.0	1.9
48	3	4.6	2.2

A5 Food Safe – horizontal – wall mount

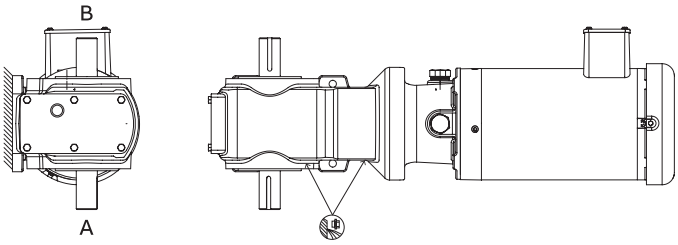

A6

Unit size	Reduction stage	Input reducer pints	Input reducer liters
38	3	3.3	1.6
48	3	5.1	2.4

A6 Food Safe – horizontal – wall mount

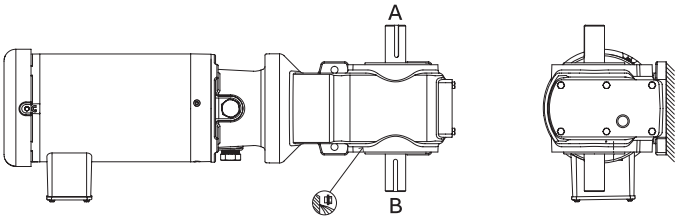

Note: All RHB Food Safe 38 and 48 Units are sealed and do not require a breather.
* Hole location on opposite side of reducer.

RHB flange positions

RHB flanged housings are specified by part numbers beginning with BF. All flanged housings have a B14 flange with drilled and tapped holes machined into the housing on both sides. The B5 flange is an optional flange that can be bolted onto the B14 flange on either side of the housing. The B5 flange can not be used in combination with the tapered hollow bore output shaft due to the flange interfering with the Twin-tapered bushings. Flanged housings also have four drilled and tapped holes on the bottom of the reducer which are required for the optional tie rod kit or Torque-Arm bracket.

B14 Output flange – both A and B side

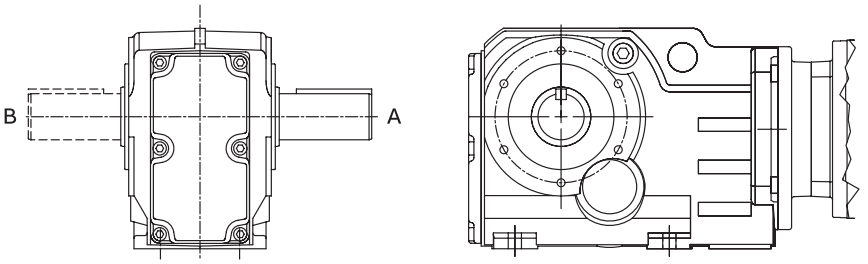

Optional B5 output flange – A side

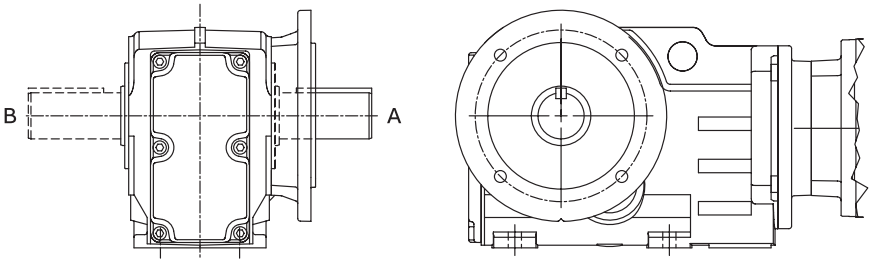

Output B5 output flange – B side

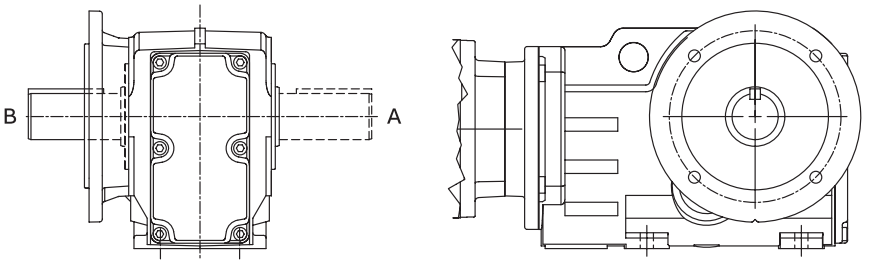

RHB Quantis
Shrink disk mounting positions

Metric shrink disc provides a keyless hollow bore solution to connect a hollow shaft reducer to a customer shaft. The shrink disc has a series of fasteners on the side of the device. When the fasteners are tightened, the wedge portion of the inner sleeve compresses against the customer shaft. The shrink disc is located on one side of the reducer, typically on the exposed side of the reducer. This allows the customer to install the reducer and tighten the shrink disc from one side.

The output shaft position reflects the side of the reducer that the customer is going to mount to the equipment. The shrink disc is mounted on the opposite side of the driven equipment. See drawings for
shrink disc mounting positions.

Output shaft position B

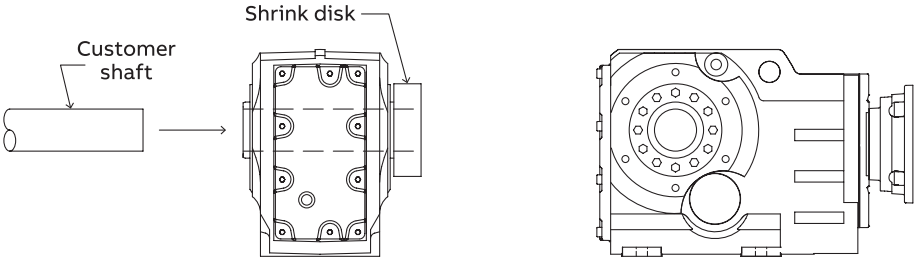

Output shaft position A

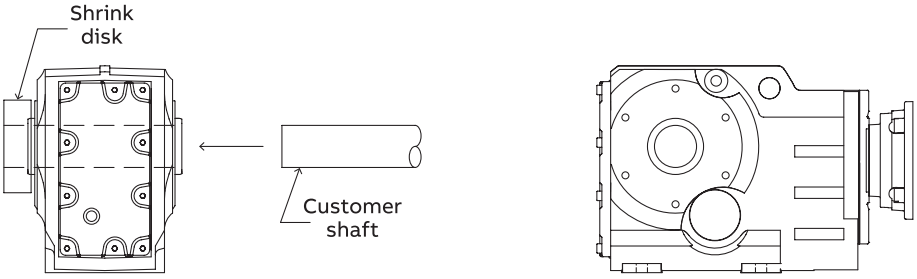

Output shaft position B – flange position B

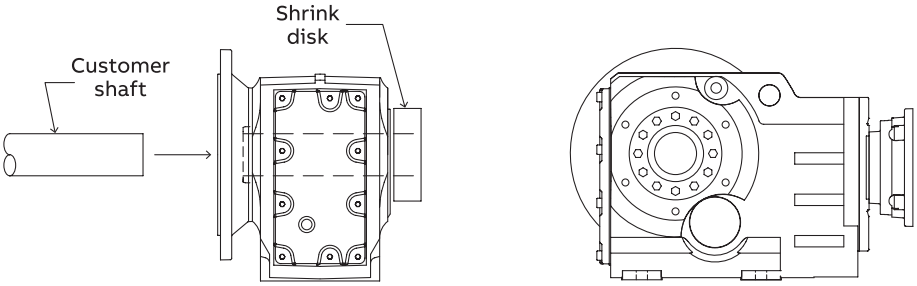

Output shaft position A – flange position A

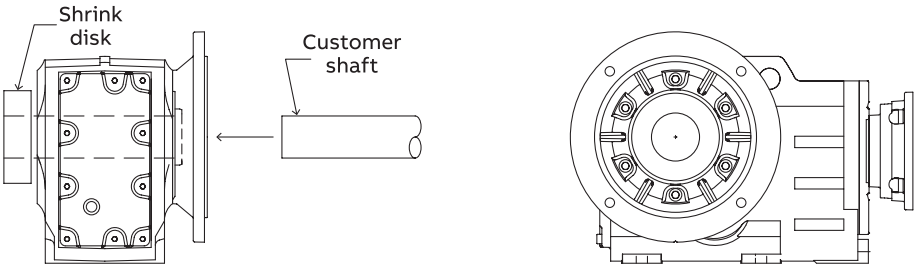

Overhung Loads

Quantis right-angle helical bevel (RHB) – solid output shaft

Permissible overhung loads at service factor SF = 10

1. Calculation based on bearing life

$$F_x \text{ perm.}_1 = F_R \text{ perm} \quad \frac{y}{z + X} \quad [lb_f]$$

2. Calculation based on mechanical strength

$$F_x \text{ perm.}_2 = \frac{a}{X} \quad [lb_f]$$

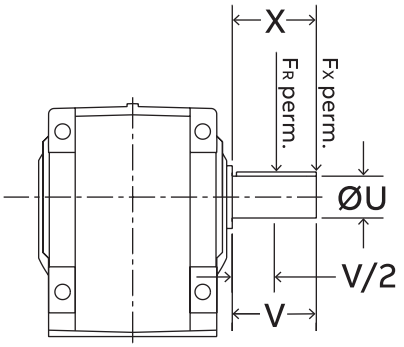

The data in the table below lists the permissible output shaft overhung load (OHL) when the load is located at mid shaft. To calculate the permissible OHL when the load is located at other positions, use the formulas above along with the data below.

Both equations 1 and 2 must be used to determine if the bearing or shaft strength limits the OHL. Limit the OHL to the lower of the 2 calculations.

Type	y in/mm	z in/mm	a Lb-in / kNmm	u in/mm	v in/mm	FR perm. in (lbf) for x=u for output speeds n2 in min-1 <= 16	<= 25	<= 40	<= 63	<= 100	<= 160	<= 250	<= 400
B_38	**4.80**	**3.82**	**1390**	**1.000**	**1.97**	1730	1429	1150	926	726	617	620	589
	122	97	157	25	50								
	5.20	3.82	1735	1.375	2.76	1599	1321	1063	856	671	570	573	544
	132	97	196	35	70								
B_48	**5.94**	**4.76**	**2222**	**1.250**	**2.36**	2419	1983	1591	1266	1149	1110	1032	935
	151	121	251	30	60								
	6.34	4.76	2726	1.625	3.15	2269	1860	1492	1187	1078	1041	968	877
	161	121	308	40	80								
B_58	**6.69**	**5.31**	**3036**	**1.375**	**2.76**	6225	5400	4725	4050	3825	3300	2800	2450
	170	135	343	35	70								
B_68	**7.48**	**5.91**	**3939**	**1.625**	**3.15**	6506	5569	4717	4098	3769	3399	3048	2698
	190	150	445	40	80								
	7.87	5.91	6028	2.000	3.94	6150	5264	4459	3873	3562	3213	2881	2550
	200	150	681	50	100								
B_88	**8.86**	**6.89**	**8886**	**2.000**	**3.94**	10936	9358	7913	6722	6200	5633	5073	4505
	225	175	1004	50	100								
	9.65	6.89	15321	2.750	5.51	9966	8528	7211	6126	5650	5133	4623	4105
	245	175	1731	70	140								
B_108	**10.31**	**7.95**	**13197**	**2.375**	**4.72**	13336	11326	9501	8196	7688	7046	6377	5683
	262	202	1491	60	120								
	11.1	7.95	24464	3.188	6.69	12304	10450	8766	7562	7093	6501	5884	5243
	282	202	2764	80	170								
B_128	**12.99**	**10.24**	**19039**	**2.875**	**5.51**	22350	19106	16159	13651	12342	11339	10282	9185
	330	260	2151	70	140								
	13.78	10.24	30288	3.625	6.69	20968	17925	15160	12807	11579	10638	9646	8617
	350	260	3422	90	170								
B_148	**15.67**	**12.13**	**46158**	**3.625**	**6.69**	21381	18035	14996	12561	11951	11162	10246	9207
	398	308	5215	90	170								
	16.06	12.13	40148	4.000	8.27	20816	17559	14600	12229	11635	10867	9975	8964
	408	308	4536	100	210								
B_168	**18.56**	**14.23**	**82058**	**4.375**	**8.27**	32783	27792	23263	19423	17607	16566	15278	13774
	472	362	9271	110	210								
	18.98	14.23	63763	4.750	8.27	32045	27166	22739	18986	17210	16193	14934	13464
	482	362	7204	120	210								

Heavy duty bearings are standard on size 68 and above. Heavy duty bearings are not available for size 38 and 48.

* Direction of rotation with view on output shaft

To convert lbf to Newtons (N), multiply by 4.448

bold - Standard shaft

cw = clockwise / ccw = counter clockwise

Quantis RHB – hollow output shaft

Permissible overhung loads at service factor SF = 10

1. **Calculation based on bearing life**

$$F_x \text{ perm.}_1 = F_R \text{ perm} \quad \frac{y}{z + X} \quad [lb_f]$$

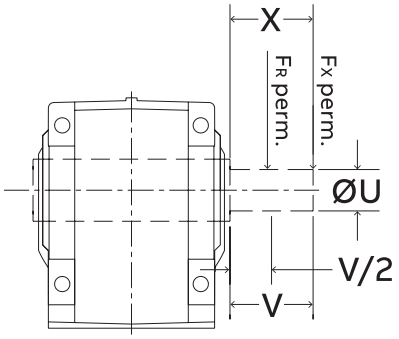

The data in the table below lists the permissible output shaft overhung load (OHL) when the load is located at mid shaft. To calculate the permissible OHL when the load is located at other positions, use the formula above along with the data below.

Type (Stages)	y in/mm	z in/mm	u in/mm	v in/mm	FR perm. in (lbf) for x=u for output speeds n2 in min-1 <= 16	<= 25	<= 40	<= 63	<= 100	<= 160	<= 250	<= 400
B_38	**5.20**	**3.82**	**1.250**	**2.76**	1730	1429	1150	926	726	617	620	589
	132	97	30	70								
B_48	**5.94**	**4.76**	**1.375**	**2.76**	2419	1983	1591	1266	1149	1110	1032	935
	151	121	35	70								
B_58	6.69	5.31	1.375	2.76	2300	1850	1450	1100	825	875	700	600
	170	135	35	70								
B_68	**7.48**	**5.91**	**1.500**	**3.15**	6506	5569	4717	4098	3769	3399	3048	2698
	190	150	40	80								
	7.87	5.91	1.4375	3.94	6150	5261	4459	3873	3562	3213	2881	2550
	200	150	45	100								
B_88	**8.56**	**6.89**	**2.000**	**3.94**	10936	9358	7913	6722	6200	5633	5073	4505
	225	175	50	100								
	9.65	6.89	1.9375	5.51	9966	8528	7211	6126	5650	5133	4623	4105
	245	175	60	140								
B_108	**10.71**	**7.95**	**2.375**	**5.51**	13336	11326	9501	8196	7688	7046	6377	5683
	272	202	60	140								
	11.30	7.95	2.4375	6.69	12304	10450	8766	7562	7093	6501	5884	5243
	287	202	70	170								
B_128	**13.58**	**10.24**	**2.750**	**6.69**	22350	19106	16159	13651	12342	11339	10282	9185
	345	260	70	170								
	13.58	10.24	2.9375	6.69	20968	17925	15160	12807	11579	10638	9646	8617
	345	260	80	170								
B_148	**15.47**	**12.13**	**3.625**	**6.69**	21381	18035	14996	12561	11951	11162	10246	9207
	393	308	80	170								
	16.26	12.13	3.4375	8.27	20816	17559	14600	12229	11635	10867	9975	8964
	413	308	90	210								
B_168	**18.37**	**14.23**	**4.000**	**8.27**	32783	27792	23263	19423	17607	16566	15278	13774
	467	362	100	210								
	18.37	14.23	3.9375	8.27	32045	27166	22739	18986	17210	16193	14934	13464
	467	362	110	210								

Heavy Duty bearings are standard for size 68 and above. Heavy Duty bearings are not available for sizes 38 and 48.

* Direction of rotation with view on output shaft
To convert lbf to Newtons (N), multiply by 4.448

bold - Standard shaft
cw = clockwise / ccw = counter clockwise

RHB Selection - 60 Hz

RHB 38

Size: B_383

Triple reduction – Clamp collar, three-piece coupled, separate

NEMA motor frame		56C			—			140TC			180TC		
IEC motor frame		71D			80D			90D			100D		
Separate group		71			80			90			100		
Ratio	Output Rating data	3450	1750	1160	3450	1750	1160	3450	1750	1160	3450	1750	1160
	Output RPM	610	**310**	205	610	**310**	205	610	**310**	205	610	**310**	205
	Input Hp (max) **(C)**	3.98	**2.02**	1.34	4.85	**2.46**	1.63	6.99	**5**	3.27	6.99	**5.6**	3.27
5.65	Output torque, in-lb	411	**411**	411	500	**500**	500	722	**1019**	1004	722	**1140**	1004
	OHL input shaft	**(A)**	**209**	218	**(A)**	**346**	360	**(A)**	**456**	475	**(A)**	**711**	742
	OHL output shaft **(B)**	**(A)**	**589**	620	**(A)**	**589**	620	**(A)**	**589**	620	**(A)**	**589**	620
	Output RPM	555	**281**	187	555	**281**	187	555	**281**	187	555	**281**	187
	Input Hp (max) **(C)**	3.98	**2.02**	1.34	4.85	**2.46**	1.63	6.57	**5**	3.07	6.57	**5.26**	3.07
6.22	Output torque, in-lb	452	**452**	452	550	**550**	550	746	**1120**	1038	746	**1177**	1038
	OHL input shaft	**(A)**	**211**	217	**(A)**	**346**	360	**(A)**	**456**	475	**(A)**	**711**	742
	OHL output shaft **(B)**	**(A)**	**589**	620	**(A)**	**589**	620	**(A)**	**589**	620	**(A)**	**589**	620
	Output RPM	478	**242**	161	478	**242**	161	478	**242**	161	478	**242**	161
	Input Hp (max) **(C)**	3.98	**2.02**	1.34	4.85	**2.46**	1.63	5.95	**4.76**	2.78	5.95	**4.76**	2.78
7.22	Output torque, in-lb	525	**525**	525	639	**639**	639	786	**1237**	1092	786	**1237**	1092
	OHL input shaft	**(A)**	**210**	219	**(A)**	**346**	360	**(A)**	**456**	475	**(A)**	**712**	743
	OHL output shaft **(B)**	**(A)**	**620**	620	**(A)**	**620**	620	**(A)**	**620**	620	**(A)**	**620**	620
	Output RPM	441	**224**	148	441	**224**	148	441	**224**	148	441	**224**	148
	Input Hp (max) **(C)**	3.98	**2.02**	1.34	4.85	**2.46**	1.63	5.65	**4.51**	2.64	5.65	**4.51**	2.64
7.82	Output torque, in-lb	569	**569**	569	692	**692**	692	807	**1270**	1122	807	**1270**	1122
	OHL input shaft	**(A)**	**210**	219	**(A)**	**346**	360	**(A)**	**456**	471	**(A)**	**713**	743
	OHL output shaft **(B)**	**(A)**	**620**	617	**(A)**	**620**	617	**(A)**	**620**	617	**(A)**	**620**	617
	Output RPM	390	**198**	131	390	**198**	131	390	**198**	131	390	**198**	131
	Input Hp (max) **(C)**	3.98	**2.02**	1.34	4.85	**2.46**	1.63	5.21	**4.15**	2.43	5.21	**4.15**	2.43
8.85	Output torque, in-lb	643	**643**	643	783	**783**	783	841	**1322**	1169	841	**1322**	1169
	OHL input shaft	**(A)**	**209**	218	**(A)**	**346**	360	**(A)**	**456**	471	**(A)**	**713**	743
	OHL output shaft **(B)**	589	**620**	617	589	**620**	617	589	**620**	617	589	**620**	617
	Output RPM	355	**180**	119	355	**180**	119	355	**180**	119	355	**180**	119
	Input Hp (max) **(C)**	3.98	**2.02**	1.34	4.85	**2.46**	1.63	4.89	**3.9**	2.29	4.89	**3.9**	2.29
9.72	Output torque, in-lb	707	**707**	707	860	**860**	860	868	**1364**	1207	868	**1364**	1207
	OHL input shaft	**(A)**	**210**	217	**(A)**	**346**	360	**(A)**	**456**	472	**(A)**	**713**	743
	OHL output shaft **(B)**	589	**620**	617	589	**620**	617	589	**620**	617	589	**620**	617
	Output RPM	322	**163**	108	322	**163**	108	322	**163**	108	322	**163**	108
	Input Hp (max) **(C)**	3.98	**2.02**	1.34	4.58	**2.46**	1.63	4.58	**3.64**	2.14	4.58	**3.64**	2.14
10.72	Output torque, in-lb	731	**779**	779	896	**949**	949	896	**1404**	1246	896	**1404**	1246
	OHL input shaft	**(A)**	**209**	217	**(A)**	**345**	359	**(A)**	**457**	471	**(A)**	**713**	743
	OHL output shaft **(B)**	589	**620**	617	589	**620**	617	589	**620**	617	589	**620**	617
	Output RPM	300	**152**	101	300	**152**	101	300	**152**	101	300	**152**	101
	Input Hp (max) **(C)**	3.98	**2.02**	1.34	4.85	**2.46**	1.63	6.99	**5**	3.27	6.99	**5.34**	3.27
11.50	Output torque, in-lb	836	**836**	836	1018	**1018**	1018	1468	**2072**	2042	1468	**2213**	2042
	OHL input shaft	**(A)**	**209**	218	**(A)**	**346**	360	**(A)**	**456**	475	**(A)**	**712**	742
	OHL output shaft **(B)**	589	**617**	617	589	**617**	617	589	**617**	617	589	**617**	617
	Output RPM	273	**138**	92	273	**138**	92	273	**138**	92	273	**138**	92
	Input Hp (max) **(C)**	3.98	**2.02**	1.34	4.85	**2.46**	1.63	6.57	**4.86**	3.07	6.57	**4.86**	3.07
12.65	Output torque, in-lb	920	**920**	920	1120	**1120**	1120	1518	**2213**	2111	1518	**2213**	2111
	OHL input shaft	**(A)**	**211**	217	**(A)**	**346**	360	**(A)**	**456**	475	**(A)**	**713**	742
	OHL output shaft **(B)**	589	**617**	726	589	**617**	726	589	**617**	726	589	**617**	726
	Output RPM	235	**119**	79	235	**119**	79	235	**119**	79	235	**119**	79
	Input Hp (max) **(C)**	3.98	**2.02**	1.34	4.85	**2.46**	1.63	5.95	**4.18**	2.77	5.95	**4.18**	2.77
14.69	Output torque, in-lb	1068	**1068**	1068	1301	**1301**	1301	1598	**2213**	2213	1598	**2213**	2213
	OHL input shaft	**(A)**	**210**	219	**(A)**	**346**	360	**(A)**	**457**	470	**(A)**	**714**	743
	OHL output shaft **(B)**	620	**617**	726	620	**617**	726	620	**617**	726	620	**617**	726
	Output RPM	217	**110**	73	217	**110**	73	217	**110**	73	217	**110**	73
	Input Hp (max) **(C)**	3.98	**2.02**	1.34	4.85	**2.46**	1.63	5.65	**3.86**	2.56	5.65	**3.86**	2.56
15.91	Output torque, in-lb	1157	**1157**	1157	1408	**1408**	1408	1642	**2213**	2213	1642	**2213**	2213
	OHL input shaft	**(A)**	**210**	219	**(A)**	**346**	360	(A)	**453**	472	**(A)**	**714**	743
	OHL output shaft **(B)**	620	**617**	726	620	**617**	726	620	**617**	726	620	**617**	726

Service factor: 1.0

(A) (B) (C) - See footnotes page on inside back cover

Blank areas (-) indicate configuration not available

RHB 38

Size: B_383

Triple reduction – Clamp collar, three-piece coupled, separate

NEMA motor frame		56C			—			140TC			180TC		
IEC motor frame		71D			80D			90D			100D		
Separate group		71			80			90			100		
Ratio	Output Rating data	3450	1750	1160	3450	1750	1160	3450	1750	1160	3450	1750	1160
	Output RPM	192	**97**	65	192	**97**	65	192	**97**	65	192	**97**	65
	Input Hp (max) **(C)**	3.98	**2.02**	1.34	4.85	**2.46**	1.63	5.21	**3.41**	2.26	5.21	**3.41**	2.26
17.99	Output torque, in-lb	1308	**1308**	1308	1593	**1593**	1593	1711	**2213**	2213	1711	**2213**	2213
	OHL input shaft	**(A)**	**209**	218	**(A)**	**346**	360	(A)	**453**	472	**(A)**	**714**	743
	OHL output shaft **(B)**	620	**726**	726	620	**726**	726	620	**726**	726	620	**726**	726
	Output RPM	175	**89**	59	175	**89**	59	175	**89**	59	175	**89**	59
	Input Hp (max) **(C)**	3.98	**2.02**	1.34	4.85	**2.46**	1.63	4.89	**3.11**	2.06	4.89	**3.11**	2.06
19.78	Output torque, in-lb	1438	**1438**	1438	1750	**1750**	1750	1766	**2213**	2213	1766	**2213**	2213
	OHL input shaft	**(A)**	**210**	217	**(A)**	**346**	360	(A)	**454**	473	**(A)**	**715**	744
	OHL output shaft **(B)**	620	**726**	926	620	**726**	926	620	**726**	926	620	**726**	926
	Output RPM	158	**80**	53	158	**80**	53	158	**80**	53	158	**80**	53
	Input Hp (max) **(C)**	3.98	**2.02**	1.34	4.58	**2.46**	1.63	4.58	**2.82**	1.87	4.58	**2.82**	1.87
21.81	Output torque, in-lb	1488	**1586**	1586	1824	**1931**	1931	1824	**2213**	2213	1824	**2213**	2213
	OHL input shaft	**(A)**	**210**	217	**(A)**	**345**	359	(A)	**455**	474	**(A)**	**715**	744
	OHL output shaft **(B)**	617	**726**	926	617	**726**	926	617	**726**	926	617	**726**	926
	Output RPM	143	**72**	48	143	**72**	48	143	**72**	48	143	**72**	48
	Input Hp (max) **(C)**	3.98	**1.89**	1.34	4.27	**2.46**	1.63	4.27	**2.54**	1.69	4.27	**2.54**	1.69
24.16	Output torque, in-lb	1538	**1648**	1757	1886	**2138**	2138	1886	**2213**	2213	1886	**2213**	2213
	OHL input shaft	**(A)**	**209**	217	**(A)**	**345**	359	(A)	**456**	474	**(A)**	**715**	744
	OHL output shaft **(B)**	617	**726**	926	617	**726**	926	617	**726**	926	617	**726**	926
	Output RPM	128	**65**	43	128	**65**	43	128	**65**	43	128	**65**	43
	Input Hp (max) **(C)**	3.87	**1.76**	1.34	3.97	**2.28**	1.51	3.97	**2.28**	1.51	3.97	**2.28**	1.51
26.90	Output torque, in-lb	1900	**1701**	1956	1952	**2213**	2213	1952	**2213**	2213	1952	**2213**	2213
	OHL input shaft	**(A)**	**209**	217	**(A)**	**345**	359	(A)	**456**	475	**(A)**	**715**	744
	OHL output shaft **(B)**	617	**726**	926	617	**726**	926	617	**726**	926	617	**726**	926
	Output RPM	120	**61**	40	120	**61**	40	120	**61**	40	120	**61**	40
	Input Hp (max) **(C)**	3.98	**2.02**	1.34	4.07	**2.14**	1.42	4.07	**2.14**	1.42	4.07	**2.14**	1.42
28.70	Output torque, in-lb	2088	**2088**	2088	2133	**2213**	2213	2133	**2213**	2213	2133	**2213**	2213
	OHL input shaft	(A)	**209**	218	**(A)**	**346**	360	(A)	**457**	476	**(A)**	**713**	741
	OHL output shaft **(B)**	617	**926**	926	617	**926**	926	617	**926**	926	617	**926**	926
	Output RPM	109	**55**	37	109	**55**	37	109	**55**	37	109	**55**	37
	Input Hp (max) **(C)**	3.80	**1.94**	1.29	3.80	**1.94**	1.29	3.80	**1.91**	1.29	3.80	**1.94**	1.29
31.59	Output torque, in-lb	2195	**2213**	2213	2195	**2213**	2213	2195	**2213**	2213	2195	**2213**	2213
	OHL input shaft	**(A)**	**209**	218	**(A)**	**346**	360	**(A)**	**453**	472	**(A)**	**713**	742
	OHL output shaft **(B)**	617	**926**	1150	617	**926**	1150	617	**926**	1150	617	**926**	1150
	Output RPM	94	**48**	32	94	**48**	32	94	**48**	32	94	**48**	32
	Input Hp (max) **(C)**	3.30	**1.68**	1.11	3.30	**1.67**	1.11	3.30	**1.67**	1.11	3.30	**1.67**	1.11
36.69	Output torque, in-lb	2213	**2213**	2213	2213	**2213**	2213	2213	**2213**	2213	2213	**2213**	2213
	OHL input shaft	**(A)**	**209**	218	**(A)**	**344**	357	**(A)**	**454**	472	**(A)**	**714**	743
	OHL output shaft **(B)**	726	**926**	1150	726	**926**	1150	726	**926**	1150	726	**926**	1150
	Output RPM	87	**44**	29	87	**44**	29	87	**44**	29	87	**44**	29
	Input Hp (max) **(C)**	3.05	**1.55**	1.03	3.05	**1.55**	1.03	3.05	**1.55**	1.03	3.05	**1.55**	1.03
39.73	Output torque, in-lb	2213	**2213**	2213	2213	**2213**	2213	2213	**2213**	2213	2213	**2213**	2213
	OHL input shaft	**(A)**	**210**	218	**(A)**	**343**	357	**(A)**	**455**	473	**(A)**	**714**	743
	OHL output shaft **(B)**	726	**926**	1150	726	**926**	1150	726	**926**	1150	726	**926**	1150
	Output RPM	77	**39**	26	77	**39**	26	77	**39**	26	77	**39**	26
	Input Hp (max) **(C)**	2.70	**1.37**	0.91	2.70	**1.37**	0.91	2.70	**1.37**	0.91	2.70	**1.37**	0.91
44.94	Output torque, in-lb	2213	**2213**	2213	2213	**2213**	2213	2213	**2213**	2213	2213	**2213**	2213
	OHL input shaft	**(A)**	**210**	219	**(A)**	**344**	358	**(A)**	**456**	474	**(A)**	**714**	743
	OHL output shaft **(B)**	726	**1150**	1150	726	**1150**	1150	726	**1150**	1150	726	**1150**	1150
	Output RPM	70	**35**	24	70	**35**	24	70	**35**	24	70	**35**	24
	Input Hp (max) **(C)**	2.45	**1.24**	0.83	2.45	**1.24**	0.82	2.45	**1.24**	0.82	2.45	**1.24**	0.82
49.38	Output torque, in-lb	2213	**2213**	2213	2213	**2213**	2213	2213	**2213**	2213	2213	**2213**	2213
	OHL input shaft	**(A)**	**211**	219	**(A)**	**345**	359	**(A)**	**456**	474	**(A)**	**714**	743
	OHL output shaft **(B)**	726	**1150**	1411	726	**1150**	1411	726	**1150**	1411	726	**1150**	1411

Service factor: 1.0

(A) (B) (C) - See footnotes page on inside back cover

Blank areas (-) indicate configuration not available

RHB 38

Size: B_383

Triple reduction – Clamp collar, three-piece coupled, separate

NEMA motor frame		56C			—			140TC			180TC		
IEC motor frame		71D			80D			90D			100D		
Separate group		71			80			90			100		
Ratio	Output Rating data	3450	1750	1160	3450	1750	1160	3450	1750	1160	3450	1750	1160
	Output RPM	63	**32**	21	63	**32**	21	63	**32**	21	63	**32**	21
	Input Hp (max) **(C)**	2.22	**1.13**	0.75	2.22	**1.13**	0.75	2.22	**1.13**	0.75	2.22	**1.13**	0.75
54.47	Output torque, in-lb	2213	**2213**	2213	2213	**2213**	2213	2213	**2213**	2213	2213	**2213**	2213
	OHL input shaft	**(A)**	**211**	219	**(A)**	**345**	359	**(A)**	**456**	475	**(A)**	**715**	744
	OHL output shaft **(B)**	926	**1150**	1411	926	**1150**	1411	926	**1150**	1411	926	**1150**	1411
	Output RPM	57	**29**	19	57	**29**	19	57	**29**	19	57	**29**	19
	Input Hp (max) **(C)**	2.01	**1.02**	0.68	2.01	**1.02**	0.68	2.01	**1.02**	0.68	2.01	**1.02**	0.68
60.33	Output torque, in-lb	2213	**2213**	2213	2213	**2213**	2213	2213	**2213**	2213	2213	**2213**	2213
	OHL input shaft	**(A)**	**211**	219	**(A)**	**346**	359	**(A)**	**457**	475	**(A)**	**715**	744
	OHL output shaft **(B)**	926	**1150**	1411	926	**1150**	1411	926	**1150**	1411	926	**1150**	1411
	Output RPM	51	**26**	17	51	**26**	17	51	**26**	17	51	**26**	17
	Input Hp (max) **(C)**	1.80	**0.91**	0.61	1.80	**0.91**	0.61	1.80	**0.91**	0.61	1.80	**0.91**	0.61
67.18	Output torque, in-lb	2213	**2213**	2213	2213	**2213**	2213	2213	**2213**	2213	2213	**2213**	2213
	OHL input shaft	**(A)**	**211**	220	**(A)**	**346**	360	**(A)**	**457**	475	**(A)**	**715**	744
	OHL output shaft **(B)**	926	**1150**	1411	926	**1150**	1411	926	**1150**	1411	926	**1150**	1411
	Output RPM	45	**23**	15	45	**23**	15	45	**23**	15	45	**23**	15
	Input Hp (max) **(C)**	1.57	**0.8**	0.53	1.57	**0.8**	0.53	1.57	**0.8**	0.53	1.57	**0.8**	0.53
77.09	Output torque, in-lb	2213	**2213**	2213	2213	**2213**	2213	2213	**2213**	2213	2213	**2213**	2213
	OHL input shaft	**(A)**	**211**	220	**(A)**	**346**	360	**(A)**	**457**	475	**(A)**	**715**	744
	OHL output shaft **(B)**	926	**1411**	1411	926	**1411**	1411	926	**1411**	1411	926	**1411**	1411
	Output RPM	40	**21**	13	40	**21**	13	40	**21**	13	–	**–**	–
	Input Hp (max) **(C)**	1.42	**0.72**	0.48	1.42	**0.72**	0.48	1.42	**0.72**	0.48	–	**–**	–
85.33	Output torque, in-lb	2213	**2213**	2213	2213	**2213**	2213	2213	**2213**	2213	–	**–**	–
	OHL input shaft	**(A)**	**211**	220	**(A)**	**346**	360	**(A)**	**457**	476	–	**–**	–
	OHL output shaft **(B)**	1150	**1411**	1411	1150	**1411**	1411	1150	**1411**	1411	–	**–**	–
	Output RPM	36	**18**	12	36	**18**	12	36	**18**	12	–	**–**	–
	Input Hp (max) **(C)**	1.25	**0.63**	0.42	1.25	**0.63**	0.42	1.25	**0.63**	0.42	–	**–**	–
97.05	Output torque, in-lb	2213	**2213**	2213	2213	**2213**	2213	2213	**2213**	2213	–	**–**	–
	OHL input shaft	**(A)**	**210**	218	**(A)**	**346**	360	**(A)**	**457**	475	–	**–**	–
	OHL output shaft **(B)**	1150	**1411**	1411	1150	**1411**	1411	1150	**1411**	1411	–	**–**	–
	Output RPM	31	**16**	11	31	**16**	11	31	**16**	11	–	**–**	–
	Input Hp (max) **(C)**	1.09	**0.55**	0.37	1.09	**0.55**	0.37	1.09	**0.55**	0.37	–	**–**	–
110.75	Output torque, in-lb	2213	**2213**	2213	2213	**2213**	2213	2213	**2213**	2213	–	**–**	–
	OHL input shaft	**(A)**	**210**	218	**(A)**	**346**	360	**(A)**	**457**	476	–	**–**	–
	OHL output shaft **(B)**	1150	**1411**	1411	1150	**1411**	1411	1150	**1411**	1411	–	**–**	–
	Output RPM	28	**14**	9	28	**14**	9	–	**–**	–	–	**–**	–
	Input Hp (max) **(C)**	0.97	**0.49**	0.33	0.97	**0.49**	0.33	–	**–**	–	–	**–**	–
124.78	Output torque, in-lb	2213	**2213**	2213	2213	**2213**	2213	–	**–**	–	–	**–**	–
	OHL input shaft	**(A)**	**210**	219	**(A)**	**346**	360	–	**–**	–	–	**–**	–
	OHL output shaft **(B)**	1150	**1411**	1411	1150	**1411**	1411	–	**–**	–	–	**–**	–
	Output RPM	25	**13**	8	25	**13**	8	–	**–**	–	–	**–**	–
	Input Hp (max) **(C)**	0.87	**0.44**	0.29	0.87	**0.44**	0.29	–	**–**	–	–	**–**	–
139.44	Output torque, in-lb	2213	**2213**	2213	2213	**2213**	2213	–	**–**	–	–	**–**	–
	OHL input shaft	**(A)**	**211**	219	**(A)**	**346**	360	–	**–**	–	–	**–**	–
	OHL output shaft **(B)**	1411	**1411**	1411	1411	**1411**	1411	–	**–**	–	–	**–**	–
	Output RPM	22	**11**	7	22	**11**	7	–	**–**	–	–	**–**	–
	Input Hp (max) **(C)**	0.76	**0.39**	0.26	0.76	**0.39**	0.26	–	**–**	–	–	**–**	–
159.04	Output torque, in-lb	2213	**2213**	2213	2213	**2213**	2213	–	**–**	–	–	**–**	–
	OHL input shaft	**(A)**	**211**	219	**(A)**	**346**	360	–	**–**	–	–	**–**	–
	OHL output shaft **(B)**	1411	**1411**	1411	1411	**1411**	1411	–	**–**	–	–	**–**	–
	Output RPM	19	**10**	7	–	**–**	–	–	**–**	–	–	**–**	–
	Input Hp (max) **(C)**	0.68	**0.34**	0.23	–	**–**	–	–	**–**	–	–	**–**	–
179.13	Output torque, in-lb	2213	**2213**	2213	–	**–**	–	–	**–**	–	–	**–**	–
	OHL input shaft	**(A)**	**211**	219	–	**–**	–	–	**–**	–	–	**–**	–
	OHL output shaft **(B)**	1411	**1411**	1411	–	**–**	–	–	**–**	–	–	**–**	–

Service factor: 1.0

(A) (B) (C) - See footnotes page on inside back cover

Blank areas (-) indicate configuration not available

RHB 48

Size: B_483

Triple reduction – Clamp collar, three-piece coupled, separate

NEMA motor frame		56C			—			140TC			180TC		
IEC motor frame		71D			80D			90D			100D		
Separate group		71			80			90			100		
Ratio	Output Rating data	3450	1750	1160	3450	1750	1160	3450	1750	1160	3450	1750	1160
	Output RPM	478	**242**	161	478	**242**	161	478	**242**	161	478	**242**	161
	Input Hp (max) **(C)**	3.98	**2.02**	1.34	4.84	**2.46**	1.63	9.86	**5.01**	3.32	12.95	**9.90**	6.05
7.22	Output torque, in-lb	525	**525**	525	639	**640**	639	1301	**1302**	1302	1708	**2573**	2375
	OHL input shaft	**(A)**	**218**	227	**(A)**	**346**	360	**(A)**	**456**	475	**(A)**	**710**	738
	OHL output shaft **(B)**	**(A)**	**1032**	1032	**(A)**	**1032**	1032	**(A)**	**1032**	1032	**(A)**	**1032**	1032
	Output RPM	411	**208**	138	411	**208**	138	411	**208**	138	411	**208**	138
	Input Hp (max) **(C)**	3.98	**2.02**	1.34	4.84	**2.46**	1.63	9.86	**5.01**	3.32	11.71	**8.51**	5.47
8.40	Output torque, in-lb	611	**611**	611	743	**744**	743	1513	**1514**	1514	1797	**2573**	2498
	OHL input shaft	**(A)**	**217**	226	**(A)**	**346**	360	**(A)**	**456**	475	**(A)**	**711**	739
	OHL output shaft **(B)**	**(A)**	**1032**	1110	**(A)**	**1032**	1110	**(A)**	**1032**	1110	**(A)**	**1032**	1110
	Output RPM	370	**188**	125	370	**188**	125	370	**188**	125	370	**188**	125
	Input Hp (max) **(C)**	3.98	**2.02**	1.34	4.85	**2.46**	1.63	9.86	**5.01**	3.32	10.92	**7.67**	5.08
9.32	Output torque, in-lb	678	**678**	678	825	**825**	825	1679	**1680**	1680	1859	**2573**	2572
	OHL input shaft	**(A)**	**219**	228	**(A)**	**346**	360	**(A)**	**455**	475	**(A)**	**712**	740
	OHL output shaft **(B)**	**(A)**	**1032**	1110	**(A)**	**1032**	1110	**(A)**	**1032**	1110	**(A)**	**1032**	1110
	Output RPM	340	**172**	114	340	**172**	114	340	**172**	114	340	**172**	114
	Input Hp (max) **(C)**	3.98	**2.02**	1.34	4.84	**2.46**	1.63	9.86	**4.99**	3.32	10.31	**7.04**	4.66
10.15	Output torque, in-lb	738	**738**	738	898	**899**	898	1772	**1825**	1828	1912	**2573**	2572
	OHL input shaft	**(A)**	**219**	228	**(A)**	**346**	360	**(A)**	**454**	475	**(A)**	**712**	741
	OHL output shaft **(B)**	**(A)**	**1032**	1110	**(A)**	**1032**	1110	**(A)**	**1032**	1110	**(A)**	**1032**	1110
	Output RPM	289	**146**	97	289	**146**	97	340	**146**	97	340	**146**	97
	Input Hp (max) **(C)**	3.98	**2.02**	1.34	4.85	**2.46**	1.63	9.86	**5.01**	3.32	12.95	**8.70**	6.05
11.95	Output torque, in-lb	869	**869**	869	1058	**1059**	1058	2154	**2155**	2154	2827	**3747**	3930
	OHL input shaft	**(A)**	**218**	227	**(A)**	**346**	360	**(A)**	**456**	475	**(A)**	**710**	738
	OHL output shaft **(B)**	**(A)**	**1110**	1149	**(A)**	**1110**	1149	**(A)**	**1110**	1149	**(A)**	**1110**	1149
	Output RPM	248	**126**	84	248	**126**	84	248	**126**	84	248	**126**	84
	Input Hp (max) **(C)**	3.98	**2.02**	1.34	4.84	**2.46**	1.63	9.86	**5.01**	3.32	11.71	**7.83**	5.27
13.90	Output torque, in-lb	1011	**1011**	1011	1230	**1231**	1230	2504	**2506**	2504	2973	**3921**	3983
	OHL input shaft	**(A)**	**218**	227	**(A)**	**346**	360	**(A)**	**456**	475	**(A)**	**711**	740
	OHL output shaft **(B)**	**(A)**	**1110**	1149	**(A)**	**1110**	1149	**(A)**	**1110**	1149	**(A)**	**1110**	1149
	Output RPM	224	**113**	75	224	**113**	75	224	**113**	75	224	**113**	75
	Input Hp (max) **(C)**	3.98	**2.02**	1.34	4.85	**2.46**	1.63	9.86	**5.01**	3.32	10.92	**7.17**	4.75
15.42	Output torque, in-lb	1121	**1122**	1121	1365	**1366**	1365	2779	**2780**	2779	3077	**3985**	3983
	OHL input shaft	**(A)**	**217**	226	**(A)**	**346**	360	**(A)**	**455**	475	**(A)**	**712**	741
	OHL output shaft **(B)**	**(A)**	**1110**	1149	**(A)**	**1110**	1149	**(A)**	**1110**	1149	**(A)**	**1110**	1149
	Output RPM	205	**104**	69	205	**104**	69	205	**104**	69	205	**104**	69
	Input Hp (max) **(C)**	3.98	**2.02**	1.34	4.84	**2.46**	1.63	9.56	**4.99**	3.32	10.31	**6.59**	4.37
16.79	Output torque, in-lb	1221	**1222**	1221	1486	**1487**	1486	2933	**3019**	3026	3164	**3985**	3983
	OHL input shaft	**(A)**	**219**	228	**(A)**	**346**	360	**(A)**	**454**	475	**(A)**	**713**	742
	OHL output shaft **(B)**	**(A)**	**1110**	1149	**(A)**	**1110**	1149	**(A)**	**1110**	1149	**(A)**	**1110**	1149
	Output RPM	184	**93**	62	184	**93**	62	184	**93**	62	184	**93**	62
	Input Hp (max) **(C)**	3.98	**2.02**	1.34	4.84	**2.40**	1.63	9.10	**4.75**	3.28	9.56	**5.89**	3.90
18.78	Output torque, in-lb	1366	**1366**	1366	1662	**1626**	1662	3123	**3216**	3350	3281	**3985**	3983
	OHL input shaft	**(A)**	**219**	228	**(A)**	**346**	360	**(A)**	**454**	475	**(A)**	**714**	743
	OHL output shaft **(B)**	**(A)**	**1149**	1226	**(A)**	**1149**	1226	**(A)**	**1149**	1226	**(A)**	**1149**	1226
	Output RPM	168	**85**	57	168	**85**	57	168	**85**	57	168	**85**	57
	Input Hp (max) **(C)**	3.98	**2.02**	1.34	4.85	**2.26**	1.63	8.73	**4.56**	3.15	9.00	**5.39**	3.57
20.54	Output torque, in-lb	1489	**1494**	1494	1818	**1675**	1818	3276	**3373**	3514	3378	**3985**	3983
	OHL input shaft	**(A)**	**218**	227	**(A)**	**346**	360	**(A)**	**454**	475	**(A)**	**714**	743
	OHL output shaft **(B)**	1032	**1149**	1226	1032	**1149**	1226	1032	**1149**	1226	1032	**1149**	1226
	Output RPM	153	**78**	52	153	**78**	52	153	**78**	52	153	**78**	52
	Input Hp (max) **(C)**	3.98	**2.02**	1.34	4.85	**2.12**	1.63	8.35	**4.36**	3.01	8.45	**4.91**	3.25
22.54	Output torque, in-lb	1533	**1640**	1639	1995	**1724**	1995	3437	**3540**	3688	3480	**3985**	3983
	OHL input shaft	**(A)**	**217**	227	**(A)**	**346**	360	**(A)**	**454**	475	**(A)**	**708**	738
	OHL output shaft **(B)**	1110	**1149**	1226	1110	**1149**	1226	1110	**1149**	1226	1110	**1149**	1226

Service factor: 1.0

(A) (B) (C) - See footnotes page on inside back cover

Blank areas (-) indicate configuration not available

RHB 48

Size: B_483

Triple reduction – Clamp collar, three-piece coupled, separate

NEMA motor frame		56C			—			140TC			180TC		
IEC motor frame		71D			80D			90D			100D		
Separate group		71			80			90			100		
Ratio	Output Rating data	3450	1750	1160	3450	1750	1160	3450	1750	1160	3450	1750	1160
	Output RPM	139	**70**	47	139	**70**	47	139	**70**	47	139	**70**	47
	Input Hp (max) **(C)**	3.98	**1.98**	1.34	4.85	**1.98**	1.63	7.91	**4.15**	2.87	7.91	**4.45**	2.95
24.85	Output torque, in-lb	1577	**1774**	1807	2200	**1774**	2200	3589	**3717**	3873	3589	**3985**	3983
	OHL input shaft	**(A)**	**218**	227	**(A)**	**346**	359	**(A)**	**454**	475	**(A)**	**710**	739
	OHL output shaft **(B)**	1110	**1149**	1226	1110	**1149**	1226	1110	**1149**	1226	1110	**1149**	1226
	Output RPM	125	**64**	42	125	**64**	42	125	**64**	42	125	**64**	42
	Input Hp (max) **(C)**	3.87	**1.84**	1.34	4.84	**1.84**	1.63	7.37	**3.94**	2.66	7.37	**4.02**	2.66
27.55	Output torque, in-lb	1945	**1824**	2003	2438	**1824**	2438	3708	**3909**	3983	3708	**3985**	3983
	OHL input shaft	(A)	**217**	227	**(A)**	**346**	359	**(A)**	**453**	475	**(A)**	**711**	739
	OHL output shaft **(B)**	1110	**1149**	1226	1110	**1149**	1226	1110	**1149**	1226	1110	**1149**	1226
	Output RPM	119	**61**	40	119	**61**	40	119	**61**	40	119	**61**	40
	Input Hp (max) **(C)**	3.98	**2.02**	1.34	4.85	**2.46**	1.63	6.70	**3.83**	2.54	6.70	**3.83**	2.54
28.90	Output torque, in-lb	2101	**2102**	2101	2558	**2559**	2558	3535	**3985**	3983	3535	**3985**	3983
	OHL input shaft	(A)	**218**	227	**(A)**	**346**	358	**(A)**	**455**	473	**(A)**	**715**	744
	OHL output shaft **(B)**	1110	**1226**	1226	1110	**1226**	1226	1110	**1226**	1226	1110	**1226**	1226
	Output RPM	103	**52**	35	103	**52**	35	103	**52**	35	103	**52**	35
	Input Hp (max) **(C)**	3.98	**2.02**	1.34	4.84	**2.46**	1.63	6.02	**3.29**	2.18	6.02	**3.29**	2.18
33.60	Output torque, in-lb	2443	**2444**	2443	2974	**2976**	2974	3698	**3985**	3983	3698	**3985**	3983
	OHL input shaft	(A)	**218**	226	**(A)**	**346**	360	**(A)**	**456**	474	**(A)**	**715**	744
	OHL output shaft **(B)**	1110	**1226**	1591	1110	**1226**	1591	1110	**1226**	1591	1110	**1226**	1591
	Output RPM	93	**47**	31	93	**47**	31	93	**47**	31	93	**47**	31
	Input Hp (max) **(C)**	3.98	**2.02**	1.34	4.85	**2.46**	1.63	5.60	**2.97**	1.97	5.60	**2.97**	1.97
37.28	Output torque, in-lb	2711	**2712**	2711	3300	**3302**	3300	3815	**3985**	3983	3815	**3985**	3983
	OHL input shaft	(A)	**217**	228	**(A)**	**346**	360	**(A)**	**456**	475	**(A)**	**715**	744
	OHL output shaft **(B)**	1149	**1226**	1591	1149	**1226**	1591	1149	**1226**	1591	1149	**1226**	1591
	Output RPM	85	**43**	29	85	**43**	29	85	**43**	29	85	**43**	29
	Input Hp (max) **(C)**	3.98	**2.02**	1.34	4.85	**2.46**	1.63	5.28	**2.73**	1.81	5.28	**2.73**	1.81
40.60	Output torque, in-lb	2952	**2954**	2952	3594	**3596**	3594	3914	**3985**	3983	3914	**3985**	3983
	OHL input shaft	(A)	**219**	228	**(A)**	**346**	360	**(A)**	**457**	475	**(A)**	**715**	744
	OHL output shaft **(B)**	1149	**1226**	1591	1149	**1226**	1591	1149	**1226**	1591	1149	**1226**	1591
	Output RPM	76	**39**	26	76	**39**	26	76	**39**	26	76	**39**	26
	Input Hp (max) **(C)**	3.98	**2.02**	1.34	4.80	**2.44**	1.61	4.80	**2.44**	1.61	4.80	**2.44**	1.61
45.41	Output torque, in-lb	3301	**3303**	3301	3983	**3985**	3983	3983	**3985**	3983	3983	**3985**	3983
	OHL input shaft	(A)	**219**	227	**(A)**	**346**	360	**(A)**	**457**	475	**(A)**	**708**	737
	OHL output shaft **(B)**	1149	**1591**	1591	1149	**1591**	1591	1149	**1591**	1591	1149	**1591**	1591
	Output RPM	70	**35**	23	70	**35**	23	70	**35**	23	70	**35**	23
	Input Hp (max) **(C)**	3.98	**2.02**	1.34	4.39	**2.23**	1.48	4.39	**2.23**	1.48	4.39	**2.23**	1.48
49.65	Output torque, in-lb	3599	**3612**	3609	3983	**3985**	3983	3983	**3985**	3983	3983	**3985**	3983
	OHL input shaft	**(A)**	**218**	227	**(A)**	**346**	360	**(A)**	**457**	475	**(A)**	**(A)**	738
	OHL output shaft **(B)**	1149	**1591**	1878	1149	**1591**	1878	1149	**1591**	1878	1149	**1591**	1878
	Output RPM	63	**32**	21	63	**32**	21	63	**32**	21	63	**32**	21
	Input Hp (max) **(C)**	3.98	**2.02**	1.34	4.00	**2.03**	1.35	4.00	**2.03**	1.35	4.00	**2.03**	1.35
54.49	Output torque, in-lb	3705	**3964**	3962	3983	**3985**	3983	3983	**3985**	3983	3983	**3985**	3983
	OHL input shaft	**(A)**	**217**	227	**(A)**	**346**	360	**(A)**	**457**	476	((**A)**	**(A)**	740
	OHL output shaft **(B)**	1226	**1591**	1878	1226	**1591**	1878	1226	**1591**	1878	1226	**1591**	1878
	Output RPM	57	**29**	19	57	**29**	19	57	**29**	19	57	**29**	19
	Input Hp (max) **(C)**	3.63	**1.84**	1.22	3.63	**1.84**	1.22	3.63	**1.84**	1.22	3.63	**1.84**	1.22
60.08	Output torque, in-lb	3812	**3985**	3983	3983	**3985**	3983	3983	**3985**	3983	3983	**3985**	3983
	OHL input shaft	**(A)**	**218**	226	**(A)**	**346**	360	**(A)**	**457**	476	**(A)**	**(A)**	741
	OHL output shaft **(B)**	1226	**1591**	1878	1226	**1591**	1878	1226	**1591**	1878	1226	**1591**	1878
	Output RPM	52	**26**	17	52	**26**	17	52	**26**	17	52	**26**	17
	Input Hp (max) **(C)**	3.27	**1.66**	1.10	3.27	**1.66**	1.10	3.27	**1.66**	1.10	3.27	**1.66**	1.10
66.60	Output torque, in-lb	3918	**3985**	3983	3983	**3985**	3983	3983	**3985**	3983	3983	**3985**	3983
	OHL input shaft	**(A)**	**217**	227	**(A)**	**346**	360	**(A)**	**457**	476	**(A)**	**(A)**	741
	OHL output shaft **(B)**	1226	**1591**	1878	1226	**1591**	1878	1226	**1591**	1878	1226	**1591**	1878

Service factor: 1.0

(A) (B) (C) - See footnotes page on inside back cover

Blank areas (-) indicate configuration not available

RHB 48

Size: B_483

Triple reduction – Clamp collar, three-piece coupled, separate

NEMA motor frame		56C			—			140TC			180TC		
IEC motor frame		71D			80D			90D			100D		
Separate group		71			80			90			100		
Ratio	Output Rating data	3450	1750	1160	3450	1750	1160	3450	1750	1160	3450	1750	1160
	Output RPM	46	**23**	15	46	**23**	15	46	**23**	15	46	**23**	15
	Input Hp (max) **(C)**	2.89	**1.47**	0.97	2.89	**1.47**	0.97	2.89	**1.47**	0.97	2.89	**1.47**	0.97
75.45	Output torque, in-lb	3983	**3985**	3983	3983	**3985**	3983	3983	**3985**	3983	3983	**3985**	3983
	OHL input shaft	**(A)**	**218**	228	**(A)**	**346**	360	**(A)**	**453**	471	**(A)**	**(A)**	742
	OHL output shaft **(B)**	1226	**1878**	1878	1226	**1878**	1878	1226	**1878**	1878	1226	**1878**	1878
	Output RPM	41	**21**	14	41	**21**	14	41	**21**	14	41	**21**	14
	Input Hp (max) **(C)**	2.62	**1.33**	0.88	2.62	**1.33**	0.88	2.62	**1.33**	0.88	2.62	**1.33**	0.88
83.25	Output torque, in-lb	3983	**3985**	3983	3983	**3985**	3983	3983	**3985**	3983	3983	**3985**	3983
	OHL input shaft	**(A)**	**219**	228	**(A)**	**346**	360	**(A)**	**453**	472	**(A)**	**(A)**	742
	OHL output shaft **(B)**	1226	**1878**	1878	1226	**1878**	1878	1226	**1878**	1878	1226	**1878**	1878
	Output RPM	37	**19**	12	37	**19**	12	37	**19**	12	37	**19**	12
	Input Hp (max) **(C)**	2.32	**1.18**	0.78	2.32	**1.18**	0.78	2.32	**1.18**	0.78	2.32	**1.18**	0.78
94.12	Output torque, in-lb	3989	**3985**	3983	3983	**3985**	3983	3983	**3985**	3983	3983	**3985**	3983
	OHL input shaft	**(A)**	**219**	228	**(A)**	**343**	357	**(A)**	**454**	473	(A)	**(A)**	743
	OHL output shaft **(B)**	1591	**1878**	1878	1591	**1878**	1878	1591	**1878**	1878	1591	**1878**	1878
	Output RPM	32	**16**	11	32	**16**	11	32	**16**	11	–	**–**	–
	Input Hp (max) **(C)**	2.03	**1.03**	0.68	2.03	**1.03**	0.68	2.03	**1.03**	0.68	–	**–**	–
107.47	Output torque, in-lb	3983	**3985**	3983	3983	**3985**	3983	3983	**3985**	3983	–	**–**	–
	OHL input shaft	**(A)**	**219**	227	**(A)**	**344**	358	**(A)**	**455**	474	–	**–**	–
	OHL output shaft **(B)**	1591	**1878**	1878	1591	**1878**	1878	1591	**1878**	1878	–	**–**	–
	Output RPM	28	**14**	10	28	**14**	10	28	**14**	10	–	**–**	–
	Input Hp (max) **(C)**	1.78	**0.91**	0.60	1.78	**0.91**	0.60	1.78	**0.91**	0.60	–	**–**	–
122.19	Output torque, in-lb	3983	**3985**	3983	3983	**3985**	3983	3983	**3985**	3983	–	**–**	–
	OHL input shaft	**(A)**	**219**	227	**(A)**	**345**	358	**(A)**	**456**	474	–	**–**	–
	OHL output shaft **(B)**	1591	**1878**	1878	1591	**1878**	1878	1591	**1878**	1878	–	**–**	–
	Output RPM	26	**13**	9	26	**13**	9	26	**13**	9	–	**–**	–
	Input Hp (max) **(C)**	1.67	**0.85**	0.56	1.67	**0.85**	0.56	1.67	**0.85**	0.56	–	**–**	–
130.78	Output torque, in-lb	3983	**3985**	3983	3983	**3985**	3983	3983	**3985**	3983	–	**–**	–
	OHL input shaft	**(A)**	**220**	227	**(A)**	**345**	359	**(A)**	**456**	474	–	**–**	–
	OHL output shaft **(B)**	1591	**1878**	1878	1591	**1878**	1878	1591	**1878**	1878	–	**–**	–
	Output RPM	23	**12**	8	23	**12**	8	–	**–**	–	–	**–**	–
	Input Hp (max) **(C)**	1.45	**0.73**	0.49	1.45	**0.73**	0.49	–	**–**	–	–	**–**	–
150.76	Output torque, in-lb	3983	**3985**	3983	3983	**3985**	3983	–	**–**	–	–	**–**	–
	OHL input shaft	**(A)**	**218**	228	**(A)**	**345**	359	–	**–**	–	–	**–**	–
	OHL output shaft **(B)**	1878	**1878**	1878	1878	**1878**	1878	–	**–**	–	–	**–**	–
	Output RPM	20	**10**	7	–	**–**	–	–	**–**	–	–	**–**	–
	Input Hp (max) **(C)**	1.29	**0.65**	0.43	–	**–**	–	–	**–**	–	–	**–**	–
169.53	Output Torque, In–Lb	3983	**3985**	3983	–	**–**	–	–	**–**	–	–	**–**	–
	OHL input shaft	**(A)**	**219**	228	–	**–**	–	–	**–**	–	–	**–**	–
	OHL output shaft **(B)**	1878	**1878**	1878	–	**–**	–	–	**–**	–	–	**–**	–

Service factor: 1.0

(A) (B) (C) - See footnotes page on inside back cover

Blank areas (-) indicate configuration not available

RHB 48

Size: B_484

4 stage reduction – Clamp collar, three-piece coupled, separate

NEMA motor frame		56C			—			140TC			180TC		
IEC motor frame		71D			80D			90D			100D		
Separate group		71			80			90			100		
Ratio	Output Rating data	3450	1750	1160	3450	1750	1160	3450	1750	1160	3450	1750	1160
	Output RPM	17.27	**8.76**	5.81	17.27	**8.76**	5.81	17.27	**8.76**	5.81	17.27	**8.76**	5.81
	Input Hp (max) **(C)**	1.09	**0.55**	0.37	1.09	**0.55**	0.37	1.09	**0.55**	0.37	1.09	**0.55**	0.37
199.80	Output torque, in-lb	3983	**3983**	3983	3983	**3983**	3983	3983	**3983**	3983	3983	**3983**	3983
	OHL input shaft	**(A)**	**(A)**	(A)	**(A)**	**(A)**	(A)	**(A)**	**(A)**	(A)	**(A)**	**(A)**	(A)
	OHL output shaft **(B)**	**1226**	**1591**	1878	**1226**	**1591**	1878	**1226**	**1591**	1878	**1226**	**1591**	1878
	Output RPM	15.26	**7.74**	5.13	15.26	**7.74**	5.13	15.26	**7.74**	5.13	15.26	**7.74**	5.13
	Input Hp (max) **(C)**	0.96	**0.49**	0.32	0.96	**0.49**	0.32	0.96	**0.49**	0.32	0.96	**0.49**	0.32
226.05	Output torque, in-lb	3983	**3983**	3983	3983	**3983**	3983	3983	**3983**	3983	3983	**3983**	3983
	OHL input shaft	**(A)**	**(A)**	(A)	**(A)**	**(A)**	(A)	**(A)**	**(A)**	(A)	**(A)**	**(A)**	(A)
	OHL output shaft **(B)**	**1591**	**1878**	1878	**1591**	**1878**	1878	**1591**	**1878**	1878	**1591**	**1878**	1878
	Output RPM	13.43	**6.81**	4.51	13.43	**6.81**	4.51	13.43	**6.81**	4.51	13.43	**6.81**	4.51
	Input Hp (max) **(C)**	0.85	**0.43**	0.29	0.85	**0.43**	0.29	0.85	**0.43**	0.29	0.85	**0.43**	0.29
256.95	Output torque, in-lb	3983	**3983**	3983	3983	**3983**	3983	3983	**3983**	3983	3983	**3983**	3983
	OHL input shaft	**(A)**	**(A)**	(A)	**(A)**	**(A)**	(A)	**(A)**	**(A)**	(A)	**(A)**	**(A)**	(A)
	OHL output shaft **(B)**	1591	1878	1878	**1591**	**1878**	1878	**1591**	**1878**	1878	**1591**	**1878**	1878
	Output RPM	11.78	**5.97**	3.96	11.78	**5.97**	3.96	11.78	**5.97**	3.96	11.78	**5.97**	3.96
	Input Hp (max) **(C)**	0.74	**0.38**	0.25	0.74	**0.38**	0.25	0.74	**0.38**	0.25	0.74	**0.38**	0.25
292.95	Output torque, in-lb	3983	**3983**	3983	3983	**3983**	3983	3983	**3983**	3983	3983	**3983**	3983
	OHL input shaft	**(A)**	**(A)**	(A)	**(A)**	**(A)**	(A)	**(A)**	**(A)**	(A)	**(A)**	**(A)**	(A)
	OHL output shaft **(B)**	**1591**	**1878**	1878	**1591**	**1878**	1878	**1591**	**1878**	1878	**1591**	**1878**	1878
	Output RPM	10.55	**5.35**	3.55	10.55	**5.35**	3.55	10.55	**5.35**	3.55	10.55	**5.35**	3.55
	Input Hp (max) **(C)**	0.67	**0.34**	0.22	0.67	**0.34**	0.22	0.67	**0.34**	0.22	0.67	**0.34**	0.22
326.95	Output torque, in-lb	3983	**3983**	3983	3983	**3983**	3983	3983	**3983**	3983	3983	**3983**	3983
	OHL input shaft	**(A)**	**(A)**	(A)	**(A)**	**(A)**	(A)	**(A)**	**(A)**	(A)	**(A)**	**(A)**	(A)
	OHL output shaft **(B)**	**1591**	**1878**	1878	**1591**	**1878**	1878	**1591**	**1878**	1878	**1591**	**1878**	1878
	Output RPM	9.15	**4.64**	3.08	9.15	**4.64**	3.08	9.15	**4.64**	3.08	9.15	**4.64**	3.08
	Input Hp (max) **(C)**	0.58	**0.29**	0.19	0.58	**0.29**	0.19	0.58	**0.29**	0.19	0.58	**0.29**	0.19
376.90	Output torque, in-lb	3983	**3983**	3983	3983	**3983**	3983	3983	**3983**	3983	3983	**3983**	3983
	OHL input shaft	**(A)**	**(A)**	(A)	**(A)**	**(A)**	(A)	**(A)**	**(A)**	(A)	**(A)**	**(A)**	(A)
	OHL output shaft **(B)**	1878	**1878**	1878	**1878**	**1878**	1878	**1878**	**1878**	1878	**1878**	**1878**	1878
	Output RPM	8.14	**4.13**	2.74	8.14	**4.13**	2.74	8.14	**4.13**	2.74	8.14	**4.13**	2.74
	Input Hp (max) **(C)**	0.51	**0.26**	0.17	0.51	**0.26**	0.17	0.51	**0.26**	0.17	0.51	**0.26**	0.17
423.83	Output torque, in-lb	3983	**3983**	3983	3983	**3983**	3983	3983	**3983**	3983	3983	**3983**	3983
	OHL input shaft	**(A)**	**(A)**	(A)	**(A)**	**(A)**	(A)	**(A)**	**(A)**	(A)	**(A)**	**(A)**	(A)
	OHL output shaft **(B)**	**1878**	**1878**	1878	**1878**	**1878**	1878	**1878**	**1878**	1878	**1878**	**1878**	1878
	Output RPM	7.01	**3.56**	2.36	7.01	**3.56**	2.36	7.01	**3.56**	2.36	7.01	**3.56**	2.36
	Input Hp (max) **(C)**	0.44	**0.22**	0.15	0.44	**0.22**	0.15	0.44	**0.22**	0.15	0.44	**0.22**	0.15
492.21	Output torque, in-lb	3983	**3983**	3983	3983	**3983**	3983	3983	**3983**	3983	3983	**3983**	3983
	OHL input shaft	**(A)**	**(A)**	(A)	**(A)**	**(A)**	(A)	**(A)**	**(A)**	(A)	**(A)**	**(A)**	(A)
	OHL output shaft **(B)**	**1591**	**1878**	1878	**1591**	**1878**	1878	**1591**	**1878**	1878	**1591**	**1878**	1878
	Output RPM	6.24	**3.16**	2.10	6.24	**3.16**	2.10	6.24	**3.16**	2.10	6.24	**3.16**	2.10
	Input Hp (max) **(C)**	0.39	**0.20**	0.13	0.39	**0.20**	0.13	0.39	**0.20**	0.13	0.39	**0.20**	0.13
553.29	Output torque, in-lb	3983	**3983**	3983	3983	**3983**	3983	3983	**3983**	3983	3983	**3983**	3983
	OHL input shaft	**(A)**	**(A)**	(A)	**(A)**	**(A)**	(A)	**(A)**	**(A)**	(A)	**(A)**	**(A)**	(A)
	OHL output shaft **(B)**	**1878**	**1878**	1878	**1878**	**1878**	1878	**1878**	**1878**	1878	**1878**	**1878**	1878
	Output RPM	5.42	**2.75**	1.82	5.42	**2.75**	1.82	5.42	**2.75**	1.82	–	–	–
	Input Hp (max) **(C)**	0.34	**0.17**	0.12	0.34	**0.17**	0.12	0.34	**0.17**	0.12	–	–	–
636.22	Output torque, in-lb	3983	**3983**	3983	3983	**3983**	3983	3983	**3983**	3983	–	–	–
	OHL input shaft	**(A)**	**(A)**	(A)	**(A)**	**(A)**	(A)	**(A)**	**(A)**	(A)	–	–	–
	OHL output shaft **(B)**	1591	**1878**	1878	1591	**1878**	1878	1591	**1878**	1878	–	–	–
	Output RPM	4.77	**2.42**	1.60	4.77	**2.42**	1.60	4.77	**2.42**	1.60	–	–	–
	Input Hp (max) **(C)**	0.30	**0.15**	0.10	0.30	**0.15**	0.10	0.30	**0.15**	0.10	–	–	–
723.36	Output torque, in-lb	3983	**3983**	3983	3983	**3983**	3983	3983	**3983**	3983	–	–	–
	OHL input shaft	**(A)**	**(A)**	(A)	**(A)**	**(A)**	(A)	**(A)**	**(A)**	(A)	–	–	–
	OHL output shaft **(B)**	1591	**1878**	1878	1591	**1878**	1878	1591	**1878**	1878	–	–	–

Service factor: 1.0

(A) (B) (C) - See footnotes page on inside back cover

Blank areas (-) indicate configuration not available

RHB 48

Size: B_484

4 stage reduction – Clamp collar, three-piece coupled, separate

NEMA motor frame		56C			—			140TC			180TC		
IEC motor frame		71D			80D			90D			100D		
Separate group		71			80			90			100		
Ratio	Output Rating data	3450	1750	1160	3450	1750	1160	3450	1750	1160	3450	1750	1160
	Output RPM	4.20	**2.13**	1.41	4.20	**2.13**	1.41	4.20	**2.13**	1.41	–	–	–
	Input Hp (max) **(C)**	0.27	**0.13**	0.09	0.27	**0.13**	0.09	0.27	**0.13**	0.09	–	–	–
822.34	Output torque, in-lb	3983	**3983**	3983	3983	**3983**	3983	3983	**3983**	3983	–	–	–
	OHL input shaft	(A)	**(A)**	(A)	(A)	**(A)**	(A)	(A)	**(A)**	(A)	–	–	–
	OHL output shaft **(B)**	1591	**1878**	1878	1591	**1878**	1878	1591	**1878**	1878	–	–	–
	Output RPM	3.66	**1.86**	1.23	3.66	**1.86**	1.23	3.66	**1.86**	1.23	–	–	–
	Input Hp (max) **(C)**	0.23	**0.12**	0.08	0.23	**0.12**	0.08	0.23	**0.12**	0.08	–	–	–
941.62	Output torque, in-lb	3983	**3983**	3983	3983	**3983**	3983	3983	**3983**	3983	–	–	–
	OHL input shaft	(A)	**(A)**	(A)	(A)	**(A)**	(A)	(A)	**(A)**	(A)	–	–	–
	OHL output shaft **(B)**	1591	**1878**	1878	1591	**1878**	1878	1591	**1878**	1878	–	–	–
	Output RPM	3.18	**1.61**	1.07	3.18	**1.61**	1.07	3.18	**1.61**	1.07	–	–	–
	Input Hp (max) **(C)**	0.20	**0.10**	0.07	0.20	**0.10**	0.07	0.20	**0.10**	0.07	–	–	–
1085.62	Output torque, in-lb	3983	**3983**	3983	3983	**3983**	3983	3983	**3983**	3983	–	–	–
	OHL input shaft	(A)	**(A)**	(A)	(A)	**(A)**	(A)	(A)	**(A)**	(A)	–	–	–
	OHL output shaft **(B)**	1878	**1878**	1878	1878	**1878**	1878	1878	**1878**	1878	–	–	–
	Output RPM	2.83	**1.43**	0.95	2.83	**1.43**	0.95	2.83	**1.43**	0.95	–	–	–
	Input Hp (max) **(C)**	0.18	**0.09**	0.06	0.18	**0.09**	0.06	0.18	**0.09**	0.06	–	–	–
1220.62	Output torque, in-lb	3983	**3983**	3983	3983	**3983**	3983	3983	**3983**	3983	–	–	–
	OHL input shaft	(A)	**(A)**	(A)	(A)	**(A)**	(A)	(A)	**(A)**	(A)	–	–	–
	OHL output shaft **(B)**	1878	**1878**	1878	1878	**1878**	1878	1878	**1878**	1878	–	–	–
	Output RPM	2.45	**1.24**	0.82	2.45	**1.24**	0.82	–	–	–	–	–	–
	Input Hp (max) **(C)**	0.16	**0.08**	0.05	0.16	**0.08**	0.05	–	–	–	–	–	–
1406.59	Output torque, in-lb	3983	**3983**	3983	3983	**3983**	3983	–	–	–	–	–	–
	OHL input shaft	(A)	**(A)**	(A)	(A)	**(A)**	(A)	–	–	–	–	–	–
	OHL output shaft **(B)**	1878	**1878**	1878	1878	**1878**	1878	–	–	–	–	–	–
	Output RPM	2.18	**1.11**	0.73	2.18	**1.11**	0.73	–	–	–	–	–	–
	Input Hp (max) **(C)**	0.14	**0.07**	0.05	0.14	**0.07**	0.05	–	–	–	–	–	–
1581.71	Output torque, in-lb	3983	**3983**	3983	3983	**3983**	3983	–	–	–	–	–	–
	OHL input shaft	(A)	**(A)**	(A)	(A)	**(A)**	(A)	–	–	–	–	–	–
	OHL output shaft **(B)**	1878	**1878**	1878	1878	**1878**	1878	–	–	–	–	–	–

Service factor: 1.0

(A) (B) (C) - See footnotes page on inside back cover

Blank areas (-) indicate configuration not available

RHB 48

Size: B_485

Five-stage reduction – Clamp collar, three-piece coupled, separate

NEMA motor frame		56C			—			140TC			180TC		
IEC motor frame		71D			80D			90D			100D		
Separate group		71			80			90			100		
Ratio	Output Rating data	3450	1750	1160	3450	1750	1160	3450	1750	1160	3450	1750	1160
	Output RPM	2.19	**1.11**	0.73	2.19	**1.11**	0.73	2.19	**1.11**	0.73	2.19	**1.11**	0.73
	Input Hp (max) **(C)**	0.14	**0.07**	0.05	0.14	**0.07**	0.05	0.14	**0.07**	0.05	0.14	**0.07**	0.05
1578.69	Output torque, in-lb	3983	**3983**	3983	3983	**3983**	3983	3983	**3983**	3983	3983	**3983**	3983
	OHL input shaft	**(A)**	**(A)**	(A)	**(A)**	**(A)**	(A)	**(A)**	**(A)**	(A)	**(A)**	**(A)**	(A)
	OHL output shaft **(B)**	**1591**	**1878**	1878	**1591**	**1878**	1878	**1591**	**1878**	1878	**1591**	**1878**	1878
	Output RPM	1.91	**0.97**	0.64	1.91	**0.97**	0.64	1.91	**0.97**	0.64	1.91	**0.97**	0.64
	Input Hp (max) **(C)**	0.12	**0.06**	0.04	0.12	**0.06**	0.04	0.12	**0.06**	0.04	0.12	**0.06**	0.04
1804.03	Output torque, in-lb	3983	**3983**	3983	3983	**3983**	3983	3983	**3983**	3983	3983	**3983**	3983
	OHL input shaft	**(A)**	**(A)**	(A)	**(A)**	**(A)**	(A)	**(A)**	**(A)**	(A)	**(A)**	**(A)**	(A)
	OHL output shaft **(B)**	**1226**	**1878**	1878	**1226**	**1878**	1878	**1226**	**1878**	1878	**1226**	**1878**	1878
	Output RPM	1.69	**0.86**	0.57	1.69	**0.86**	0.57	1.69	**0.86**	0.57	1.69	**0.86**	0.57
	Input Hp (max) **(C)**	0.11	**0.05**	0.04	0.11	**0.05**	0.04	0.11	**0.05**	0.04	0.11	**0.05**	0.04
2045.40	Output torque, in-lb	3983	**3983**	3983	3983	**3983**	3983	3983	**3983**	3983	3983	**3983**	3983
	OHL input shaft	**(A)**	**(A)**	(A)	**(A)**	**(A)**	(A)	**(A)**	**(A)**	(A)	**(A)**	**(A)**	(A)
	OHL output shaft **(B)**	**1591**	**1878**	1878	**1591**	**1878**	1878	**1591**	**1878**	1878	**1591**	**1878**	1878
	Output RPM	1.46	**0.74**	0.49	1.46	**0.74**	0.49	1.46	**0.74**	0.49	1.46	**0.74**	0.49
	Input Hp (max) **(C)**	0.09	**0.05**	0.03	0.09	**0.05**	0.03	0.09	**0.05**	0.03	0.09	**0.05**	0.03
2357.89	Output torque, in-lb	3983	**3983**	3983	3983	**3983**	3983	3983	**3983**	3983	3983	**3983**	3983
	OHL input shaft	**(A)**	**(A)**	(A)	**(A)**	**(A)**	(A)	**(A)**	**(A)**	(A)	**(A)**	**(A)**	(A)
	OHL output shaft **(B)**	**1878**	**1878**	1878	**1878**	**1878**	1878	**1878**	**1878**	1878	**1878**	**1878**	1878
	Output RPM	1.30	**0.66**	0.44	1.30	**0.66**	0.44	1.30	**0.66**	0.44	1.30	**0.66**	0.44
	Input Hp (max) **(C)**	0.08	**0.04**	0.03	0.08	**0.04**	0.03	0.08	**0.04**	0.03	0.08	**0.04**	0.03
2651.45	Output torque, in-lb	3983	**3983**	3983	3983	**3983**	3983	3983	**3983**	3983	3983	**3983**	3983
	OHL input shaft	**(A)**	**(A)**	(A)	**(A)**	**(A)**	(A)	**(A)**	**(A)**	(A)	**(A)**	**(A)**	(A)
	OHL output shaft **(B)**	**1878**	**1878**	1878	**1878**	**1878**	1878	**1878**	**1878**	1878	**1878**	**1878**	1878
	Output RPM	1.15	**0.58**	0.39	1.15	**0.58**	0.39	1.15	**0.58**	0.39	–	–	–
	Input Hp (max) **(C)**	0.07	**0.04**	0.02	0.07	**0.04**	0.02	0.07	**0.04**	0.02	–	–	–
3005.94	Output torque, in-lb	3983	**3983**	3983	3983	**3983**	3983	3983	**3983**	3983	–	–	–
	OHL input shaft	**(A)**	**(A)**	(A)	**(A)**	**(A)**	(A)	**(A)**	**(A)**	(A)	–	–	–
	OHL output shaft **(B)**	**1591**	**1878**	1878	**1591**	**1878**	1878	**1591**	**1878**	1878	–	–	–
	Output RPM	1.01	**0.51**	0.34	1.01	**0.51**	0.34	1.01	**0.51**	0.34	–	–	–
	Input Hp (max) **(C)**	0.06	**0.03**	0.02	0.06	**0.03**	0.02	0.06	**0.03**	0.02	–	–	–
3417.65	Output torque, in-lb	3983	**3983**	3983	3983	**3983**	3983	3983	**3983**	3983	–	–	–
	OHL input shaft	**(A)**	**(A)**	(A)	**(A)**	**(A)**	(A)	**(A)**	**(A)**	(A)	–	–	–
	OHL output shaft **(B)**	**1591**	**1878**	1878	**1591**	**1878**	1878	**1591**	**1878**	1878	–	–	–
	Output RPM	0.89	**0.45**	0.30	0.89	**0.45**	0.30	0.89	**0.45**	0.30	–	–	–
	Input Hp (max) **(C)**	0.06	**0.03**	0.02	0.06	**0.03**	0.02	0.06	**0.03**	0.02	–	–	–
3873.42	Output torque, in-lb	3983	**3983**	3983	3983	**3983**	3983	3983	**3983**	3983	–	–	–
	OHL input shaft	**(A)**	**(A)**	(A)	**(A)**	**(A)**	(A)	**(A)**	**(A)**	(A)	–	–	–
	OHL output shaft **(B)**	**1591**	**1878**	1878	**1591**	**1878**	1878	**1591**	**1878**	1878	–	–	–
	Output RPM	0.73	**0.37**	0.24	0.73	**0.37**	0.24	0.73	**0.37**	0.24	–	–	–
	Input Hp (max) **(C)**	0.05	**0.02**	0.02	0.05	**0.02**	0.02	0.05	**0.02**	0.02	–	–	–
4741.75	Output torque, in-lb	3983	**3983**	3983	3983	**3983**	3983	3983	**3983**	3983	–	–	–
	OHL input shaft	(A)	**(A)**	(A)	**(A)**	**(A)**	(A)	**(A)**	**(A)**	(A)	–	–	–
	OHL output shaft **(B)**	**1878**	**1878**	1878	**1878**	**1878**	1878	**1878**	**1878**	1878	–	–	–
	Output RPM	0.67	**0.34**	0.23	0.67	**0.34**	0.23	0.67	**0.34**	0.23	–	–	–
	Input Hp (max) **(C)**	0.04	**0.02**	0.01	0.04	**0.02**	0.01	0.04	**0.02**	0.01	–	–	–
5131.87	Output torque, in-lb	3983	**3983**	3983	3983	**3983**	3983	3983	**3983**	3983	–	–	–
	OHL input shaft	**(A)**	**(A)**	(A)	**(A)**	**(A)**	(A)	**(A)**	**(A)**	(A)	–	–	–
	OHL output shaft **(B)**	1878	**1878**	1878	1878	**1878**	1878	1878	**1878**	1878	–	–	–
	Output RPM	0.58	**0.30**	0.20	0.58	**0.30**	0.20	–	–	–	–	–	–
	Input Hp (max) **(C)**	0.04	**0.02**	0.01	0.04	**0.02**	0.01	–	–	–	–	–	–
5915.82	Output torque, in-lb	3983	**3983**	3983	3983	**3983**	3983	–	–	–	–	–	–
	OHL input shaft	**(A)**	**(A)**	(A)	**(A)**	**(A)**	(A)	–	–	–	–	–	–
	OHL output shaft **(B)**	1878	**1878**	1878	1878	**1878**	1878	–	–	–	–	–	–
	Output RPM	0.52	**0.26**	0.17	0.52	**0.26**	0.17	–	–	–	–	–	–
	Input Hp (max) **(C)**	0.03	**0.02**	0.01	0.03	**0.02**	0.01	–	–	–	–	–	–
6652.36	Output torque, in-lb	3983	**3983**	3983	3983	**3983**	3983	–	–	–	–	–	–
	OHL input shaft	(A)	**(A)**	(A)	(A)	**(A)**	(A)	–	–	–	–	–	–
	OHL output shaft **(B)**	1878	**1878**	1878	1878	**1878**	1878	–	–	–	–	–	–
	Output RPM	0.46	**0.23**	0.16	0.46	**0.23**	0.16	–	–	–	–	–	–
	Input Hp (max) **(C)**	0.03	**0.01**	0.01	0.03	**0.01**	0.01	–	–	–	–	–	–
7479.66	Output torque, in-lb	3983	**3983**	3983	3983	**3983**	3983	–	–	–	–	–	–
	OHL input shaft	(A)	**(A)**	(A)	(A)	**(A)**	(A)	–	–	–	–	–	–
	OHL output shaft **(B)**	1878	**1878**	1878	1878	**1878**	1878	–	–	–	–	–	–

RHB 58

Size: B_583

Triple reduction – Clamp collar, three-piece coupled, separate

NEMA motor frame		56C			—			140TC			180TC			—		
IEC motor frame		71D			80D			90D			100D			112D		
Separate group		71			80			90			100			112		
Ratio	Output Rating data	3450	1750	1160	3450	1750	1160	3450	1750	1160	3450	1750	1160	3450	1750	1160
	Output RPM	–	–	–	592	**300**	199	592	**300**	199	592	**300**	199	592	**300**	199
	Input Hp (max) **(C)**	–	–	–	4.85	**2.46**	1.63	9.87	**5.01**	3.32	20.44	**10.36**	6.86	26.90	**13.88**	9.19
5.83	Output torque, in-lb	–	–	–	516	**516**	516	1051	**1051**	1051	2175	**2174**	2171	2863	**2912**	2909
	OHL input shaft	–	–	–	**(A)**	**345**	360	**(A)**	**455**	470	**(A)**	**710**	735	**(A)**	**840**	875
	OHL output shaft **(B)**	–	–	–	**(A)**	**2200**	2200	2200	**2200**	2200	2200	**2200**	2200	2200	**2200**	2200
	Output RPM	472	**239**	159	472	**239**	159	472	**239**	159	472	**239**	159	472	**239**	159
	Input Hp (max) **(C)**	3.98	**2.02**	1.34	4.85	**2.46**	1.63	9.87	**5.01**	3.32	20.44	**10.36**	6.86	22.70	**12.30**	8.20
7.31	Output torque, in-lb	531	**532**	532	648	**648**	647	1318	**1319**	1318	2729	**2727**	2724	3031	**3238**	3256
	OHL input shaft	(A)	**215**	225	(A)	**345**	360	(A)	**455**	470	(A)	**710**	735	(A)	**840**	875
	OHL output shaft **(B)**	(A)	**2200**	2200	(A)	**2200**	2200	(A)	**2200**	2200	(A)	**2200**	2200	(A)	**2200**	2200
	Output RPM	425	**215**	143	425	**215**	143	425	**215**	143	425	**215**	143	425	**215**	143
	Input Hp (max) **(C)**	3.98	**2.02**	1.34	4.85	**2.46**	1.63	9.87	**5.01**	3.32	20.44	**10.36**	6.86	20.70	**11.10**	7.40
8.12	Output torque, in-lb	590	**591**	591	720	**719**	719	1464	**1465**	1465	3032	**3030**	3027	3071	**3246**	3265
	OHL input shaft	(A)	**215**	225	(A)	**345**	360	(A)	**455**	470	(A)	**710**	735	(A)	**840**	875
	OHL output shaft **(B)**	(A)	**2200**	2200	(A)	**2200**	2200	(A)	**2200**	2200	(A)	**2200**	2200	(A)	**2200**	2200
	Output RPM	369	**187**	124	369	**187**	124	369	**187**	124	369	**187**	124	369	**187**	124
	Input Hp (max) **(C)**	3.98	**2.02**	1.34	4.85	**2.46**	1.63	9.87	**5.01**	3.32	18.20	**9.70**	6.40	18.20	**9.70**	6.40
9.34	Output torque, in-lb	679	**679**	680	827	**827**	827	1684	**1685**	1685	3105	**3262**	3247	3105	**3262**	3247
	OHL input shaft	(A)	**215**	225	(A)	**345**	360	(A)	**455**	470	(A)	**710**	735	(A)	**840**	875
	OHL output shaft **(B)**	2200	**2200**	2200	2200	**2200**	2200	2200	**2200**	2200	2200	**2200**	2200	2200	**2200**	2200
	Output RPM	343	**174**	115	343	**174**	115	343	**174**	115	343	**174**	115	343	**174**	115
	Input Hp (max) **(C)**	3.98	**2.02**	1.34	4.85	**2.46**	1.63	9.87	**5.01**	3.32	17.00	**9.00**	6.00	17.00	**9.00**	6.00
10.05	Output torque, in-lb	730	**731**	731	890	**890**	890	1811	**1812**	1812	3120	**3256**	3275	3120	**3256**	3275
	OHL input shaft	(A)	**215**	225	(A)	**345**	360	(A)	**455**	470	(A)	**710**	735	(A)	**840**	875
	OHL output shaft **(B)**	2200	**2200**	2200	2200	**2200**	2200	2200	**2200**	2200	2200	**2200**	2200	2200	**2200**	2200
	Output RPM	295	**150**	99	295	**150**	99	295	**150**	99	295	**150**	99	295	**150**	99
	Input Hp (max) **(C)**	3.98	**2.02**	1.34	4.85	**2.46**	1.63	9.87	**5.01**	3.32	14.80	**7.70**	5.10	14.80	**7.70**	5.10
11.70	Output torque, in-lb	851	**851**	852	1037	**1037**	1037	2210	**2112**	2111	3164	**3246**	3243	3164	**3246**	3243
	OHL input shaft	(A)	**215**	225	(A)	**345**	360	(A)	**455**	470	(A)	**710**	735	(A)	**840**	875
	OHL output shaft **(B)**	2200	**2200**	2200	2200	**2200**	2200	2200	**2200**	2200	2200	**2200**	2200	2200	**2200**	2200
	Output RPM	–	–	–	268	**136**	90	268	**136**	90	268	**136**	90	268	**136**	90
	Input Hp (max) **(C)**	–	–	–	4.85	**2.46**	1.63	9.87	**5.01**	3.32	18.90	**11.66**	7.73	18.90	**11.66**	7.73
12.86	Output torque, in-lb	–	–	–	1139	**1139**	1139	2318	**2320**	2319	4439	**4797**	4792	4439	**5399**	5399
	OHL input shaft	–	–	–	(A)	**345**	360	(A)	**455**	470	(A)	**710**	735	(A)	**840**	875
	OHL output shaft **(B)**	–	–	–	2200	**2200**	2200	2200	**2200**	2200	2200	**2200**	2200	2200	**2200**	2200
	Output RPM	241	**122**	81	241	**122**	81	241	**122**	81	241	**122**	81	241	**122**	81
	Input Hp (max) **(C)**	3.98	**2.02**	1.34	4.85	**2.46**	1.63	9.87	**5.01**	3.32	17.60	**10.36**	6.86	17.60	**10.50**	6.96
14.29	Output torque, in-lb	1039	**1039**	1040	1266	**1266**	1265	2576	**2578**	2577	4593	**5330**	5325	4593	**5400**	5400
	OHL input shaft	(A)	**215**	225	(A)	**345**	360	(A)	**455**	470	(A)	**710**	735	(A)	**840**	875
	OHL output shaft **(B)**	2200	**2200**	2200	2200	**2200**	2200	2200	**2200**	2200	2200	**2200**	2200	2200	**2200**	2200
	Output RPM	210	**107**	71	210	**107**	71	210	**107**	71	210	**107**	71	210	**107**	71
	Input Hp (max) **(C)**	3.98	**2.02**	1.34	4.85	**2.46**	1.63	9.87	**5.01**	3.32	15.90	**9.13**	6.05	15.90	**9.13**	6.05
16.43	Output torque, in-lb	1194	**1195**	1196	1456	**1456**	1455	2962	**2964**	2963	4772	**5399**	5399	4772	**5399**	5399
	OHL input shaft	(A)	**215**	225	(A)	**345**	360	(A)	**455**	470	(A)	**710**	735	(A)	**840**	875
	OHL output shaft **(B)**	2200	**2200**	2200	2200	**2200**	2200	2200	**2200**	2200	2200	**2200**	2200	2200	**2200**	2200
	Output RPM	195	**99**	66	195	**99**	66	195	**99**	66	195	**99**	66	195	**99**	66
	Input Hp (max) **(C)**	3.98	**2.02**	1.34	4.85	**2.46**	1.63	9.87	**5.01**	3.32	15.10	**8.48**	5.63	15.10	**8.48**	5.63
17.67	Output torque, in-lb	1285	**1285**	1286	1565	**1565**	1565	3186	**3188**	3187	4874	**5398**	5404	4874	**5398**	5404
	OHL input shaft	(A)	**215**	225	(A)	**345**	360	(A)	**455**	470	(A)	**710**	735	(A)	**840**	875
	OHL output shaft **(B)**	2200	**2200**	2200	2200	**2200**	2200	2200	**2200**	2200	2200	**2200**	2200	2200	**2200**	2200
	Output RPM	168	**85**	56	168	**85**	56	168	**85**	56	168	**85**	56	168	**85**	56
	Input Hp (max) **(C)**	3.98	**2.02**	1.34	4.85	**2.46**	1.63	9.87	**5.01**	3.32	13.60	**7.28**	4.82	13.60	**7.28**	4.82
20.59	Output torque, in-lb	1497	**1498**	1499	1824	**1824**	1823	3712	**3715**	3714	5115	**5400**	5396	5115	**5400**	5396
	OHL input shaft	(A)	**215**	225	(A)	**345**	360	(A)	**455**	470	(A)	**710**	735	(A)	**840**	875
	OHL output shaft **(B)**	2200	**2200**	2200	2200	**2200**	2200	2200	**2200**	2200	2200	**2200**	2200	2200	**2200**	2200

Service factor: 1.0

(A) (B) (C) - See footnotes page on inside back cover

Blank areas (-) indicate configuration not available

RHB 58

Size: B_583

Triple reduction – Clamp collar, three-piece coupled, separate

NEMA motor frame		56C			—			140TC			180TC			—		
IEC motor frame		71D			80D			90D			100D			112D		
Separate group		71			80			90			100			112		
Ratio	Output Rating data	3450	1750	1160	3450	1750	1160	3450	1750	1160	3450	1750	1160	3450	1750	1160
	Output RPM	155	**78**	52	155	**78**	52	155	**78**	52	155	**78**	52	155	**78**	52
	Input Hp (max) **(C)**	3.98	**2.02**	1.34	4.85	**2.46**	1.63	9.87	**5.01**	3.32	12.90	**6.72**	4.46	12.90	**6.72**	4.46
22.32	Output torque, in-lb	1623	**1624**	1625	1978	**1978**	1977	4025	**4027**	4026	5260	**5400**	5403	5260	**5400**	5403
	OHL input shaft	(A)	**215**	225	(A)	**345**	360	(A)	**455**	470	(A)	**710**	735	(A)	**840**	875
	OHL output shaft **(B)**	2200	**2200**	2200	2200	**2200**	2200	2200	**2200**	2200	2200	**2200**	2200	2200	**2200**	2200
	Output RPM	142	**72**	48	142	**72**	48	142	**72**	48	142	**72**	48	142	**72**	48
	Input Hp (max) **(C)**	3.98	**2.02**	1.34	4.85	**2.46**	1.63	9.87	**5.01**	3.32	12.10	**6.18**	4.10	12..10	**6.18**	4.10
24.29	Output torque, in-lb	1766	**1767**	1768	2152	**2152**	2151	4379	**4382**	4381	5368	**5403**	5404	5368	**5403**	5404
	OHL input shaft	(A)	**215**	225	(A)	**345**	360	(A)	**455**	470	(A)	**710**	735	(A)	**840**	875
	OHL output shaft **(B)**	2200	**2200**	2200	2200	**2200**	2200	2200	**2200**	2200	2200	**2200**	2200	2200	**2200**	2200
	Output RPM	–	**–**	–	130	**66**	44	130	**66**	44	130	**66**	44	130	**66**	44
	Input Hp (max) **(C)**	–	**–**	–	4.85	**2.46**	1.63	9.87	**5.01**	3.32	10.10	**5.65**	3.74	10.10	**5.65**	3.74
26.55	Output torque, in-lb	–	**–**	–	2353	**2352**	2352	4788	**4791**	4790	4899	**5400**	5402	4899	**5400**	5402
	OHL input shaft	**–**	**–**	–	(A)	**345**	360	(A)	**455**	470	(A)	**710**	735	(A)	**840**	875
	OHL output shaft **(B)**	–	**–**	–	2200	**2200**	2200	2200	**2200**	2200	2200	**2200**	2200	2200	**2200**	2200
	Output RPM	–	**–**	–	104	**53**	35	104	**53**	35	104	**53**	35	104	**53**	35
	Input Hp (max) **(C)**	–	**–**	–	4.85	**2.46**	1.63	8.60	**4.50**	2.98	8.60	**4.50**	2.98	8.60	**4.50**	2.98
33.31	Output torque, in-lb	–	**–**	–	2951	**2951**	2950	5233	**5397**	5397	5233	**5397**	5397	5233	**5397**	5397
	OHL input shaft	**–**	**–**	–	(A)	**345**	360	(A)	**455**	470	(A)	**710**	735	(A)	**840**	875
	OHL output shaft **(B)**	–	**–**	–	2200	**2200**	2200	2200	**2200**	2200	2200	**2200**	2200	2200	**2200**	2200
	Output RPM	93	**47**	31	93	**47**	31	93	**47**	31	93	**47**	31	93	**47**	31
	Input Hp (max) **(C)**	3.98	**2.02**	1.34	4.85	**2.46**	1.63	7.99	**4.05**	2.68	7.99	**4.05**	2.68	7.99	**4.05**	2.68
37.01	Output torque, in-lb	2691	**2693**	2695	3279	**3279**	3278	5399	**5402**	5393	5399	**5402**	5393	5399	**5402**	5393
	OHL input shaft	(A)	**215**	225	(A)	**345**	360	(A)	**455**	470	(A)	**710**	735	(A)	**840**	875
	OHL output shaft **(B)**	2200	**2200**	2200	2200	**2200**	2200	2200	**2200**	2200	2200	**2200**	2200	2200	**2200**	2200
	Output RPM	81	**41**	27	81	**41**	27	81	**41**	27	81	**41**	27	81	**41**	27
	Input Hp (max) **(C)**	3.98	**2.02**	1.34	4.85	**2.46**	1.63	6.95	**3.52**	2.34	6.95	**3.52**	2.34	6.95	**3.52**	2.34
42.57	Output torque, in-lb	3095	**3097**	3099	3771	**3771**	3770	5403	**5398**	5409	5403	**5398**	5409	5403	**6398**	5409
	OHL input shaft	(A)	**215**	225	(A)	**345**	360	(A)	**455**	470	(A)	**710**	735	(A)	**840**	875
	OHL output shaft **(B)**	2200	**2200**	2200	2200	**2200**	2200	2200	**2200**	2200	2200	**2200**	2200	2200	**2200**	2200
	Output RPM	75	**38**	25	75	**38**	25	75	**38**	25	75	**38**	25	75	**38**	25
	Input Hp (max) **(C)**	3.98	**2.02**	1.34	4.85	**2.46**	1.63	6.46	**3.27**	2.17	6.46	**3.27**	2.17	6.46	**3.27**	2.17
45.78	Output torque, in-lb	3328	**3330**	3333	4056	**4056**	4054	5403	**5396**	5392	5403	**5396**	5392	5403	**5396**	5392
	OHL input shaft	(A)	**215**	225	(A)	**345**	360	(A)	**455**	470	(A)	**710**	735	(A)	**840**	875
	OHL output shaft **(B)**	2200	**2200**	2200	2200	**2200**	2200	2200	**2200**	2200	2200	**2200**	2200	2200	**2200**	2200
	Output RPM	65	**33**	22	65	**33**	22	65	**33**	22	65	**33**	22	65	**33**	22
	Input Hp (max) **(C)**	3.98	**2.02**	1.34	4.85	**2.46**	1.63	5.54	**2.81**	1.86	5.54	**2.81**	1.86	5.54	**2.81**	1.86
53.34	Output torque, in-lb	3878	**3881**	3883	4726	**4726**	4724	5402	**5399**	5388	5402	**5399**	5388	5402	**5399**	5388
	OHL input shaft	(A)	**215**	225	(A)	**345**	360	(A)	**455**	470	(A)	**710**	735	(A)	**840**	875
	OHL output shaft **(B)**	2200	**2200**	2200	2200	**2200**	2200	2200	**2200**	2200	2200	**2200**	2200	2200	**2200**	2200
	Output RPM	60	**30**	20	60	**30**	20	60	**30**	20	60	**30**	20	60	**30**	20
	Input Hp (max) **(C)**	3.98	**2.02**	1.34	4.85	**2.46**	1.63	5.12	**2.60**	1.72	5.12	**2.60**	1.72	5.12	**2.60**	1.72
57.83	Output torque, in-lb	4205	**4207**	4210	5124	**5124**	5122	5404	**5407**	5411	5404	**5407**	5411	5404	**5407**	5411
	OHL input shaft	(A)	**215**	225	(A)	**345**	360	(A)	**455**	470	(A)	**710**	735	(A)	**840**	875
	OHL output shaft **(B)**	2200	**2200**	2200	2200	**2200**	2200	2200	**2200**	2200	2200	**2200**	2200	2200	**2200**	2200
	Output RPM	55	**28**	18	55	**28**	18	55	**28**	18	55	**28**	18	55	**28**	18
	Input Hp (max) **(C)**	3.98	**2.02**	1.34	4.78	**2.38**	1.58	4.70	**2.38**	1.58	4.70	**2.38**	1.58	4.70	**2.38**	1.58
62.92	Output torque, in-lb	4575	**4577**	4581	5397	**5398**	5390	5397	**5398**	5390	5397	**5398**	5390	5397	**5398**	5390
	OHL input shaft	(A)	**215**	225	(A)	**345**	360	(A)	**455**	470	(A)	**710**	735	(A)	**840**	875
	OHL output shaft **(B)**	2200	**2200**	2200	2200	**2200**	2200	2200	**2200**	2200	2200	**2200**	2200	2200	**2200**	2200
	Output RPM	50	**25**	17	50	**25**	17	50	**25**	17	50	**25**	17	50	**25**	17
	Input Hp (max) **(C)**	3.98	**2.02**	1.34	4.30	**2.18**	1.45	4.30	**2.18**	1.45	4.30	**2.18**	1.45	4.30	**2.18**	1.45
68.74	Output torque, in-lb	4998	**5001**	5004	5401	**5409**	5408	5401	**5409**	5408	5401	**5409**	5408	5401	**5409**	5408
	OHL input shaft	(A)	**215**	225	(A)	**345**	360	(A)	**455**	470	(A)	**710**	735	(A)	**840**	875
	OHL output shaft **(B)**	2200	**2200**	2200	2200	**2200**	2200	2200	**2200**	2200	2200	**2200**	2200	2200	**2200**	2200

Service factor: 1.0

(A) (B) (C) - See footnotes page on inside back cover

Blank areas (-) indicate configuration not available

RHB 58

Size: B_583

Triple reduction – Clamp collar, three-piece coupled, separate

NEMA motor frame		56C			—			140TC			180TC			—		
IEC motor frame		71D			80D			90D			100D			112D		
Separate group		71			80			90			100			112		
Ratio	Output Rating data	3450	1750	1160	3450	1750	1160	3450	1750	1160	3450	1750	1160	3450	1750	1160
	Output RPM	46	**23**	15	46	**23**	15	46	**23**	15	46	**23**	15	46	**23**	15
	Input Hp (max) **(C)**	3.92	**1.99**	1.32	3.92	**1.99**	1.32	3.92	**1.99**	1.32	3.92	**1.99**	1.32	3.92	**1.99**	1.32
75.45	Output torque, in-lb	5397	**5401**	5409	5307	**5401**	5409	5397	**5401**	5409	5307	**5401**	5409	5397	**5401**	5409
	OHL input shaft	(A)	**215**	225	(A)	**345**	360	(A)	**455**	470	(A)	**710**	735	(A)	**840**	875
	OHL output shaft **(B)**	2200	**2200**	2200	2200	**2200**	2200	2200	**2200**	2200	2200	**2200**	2200	2200	**2200**	2200
	Output RPM	41	**21**	14	41	**21**	14	41	**21**	14	41	**21**	14	41	**21**	14
	Input Hp (max) **(C)**	3.55	**1.80**	1.19	3.55	**1.80**	1.19	3.55	**1.80**	1.19	3.55	**1.80**	1.19	3.55	**1.80**	1.19
83.28	Output torque, in-lb	5396	**5396**	5389	5396	**5396**	5389	5396	**5396**	5389	5396	**5396**	5389	–	**–**	–
	OHL input shaft	(A)	**215**	225	(A)	**345**	360	(A)	**455**	470	(A)	**710**	735	**–**	**–**	–
	OHL output shaft **(B)**	2200	**2200**	2200	2200	**2200**	2200	2200	**2200**	2200	2200	**2200**	2200	–	**–**	–
	Output RPM	37	**19**	12	37	**19**	12	37	**19**	12	37	**19**	12	–	**–**	–
	Input Hp (max) **(C)**	3.14	**1.59**	1.05	3.14	**1.59**	1.05	3.14	**1.59**	1.05	3.14	**1.59**	1.05	–	**–**	–
93.96	Output torque, in-lb	5397	**5393**	5380	5397	**5393**	5380	5397	**5393**	5380	5397	**5393**	5380	–	**–**	–
	OHL input shaft	(A)	**215**	225	(A)	**345**	360	(A)	**455**	470	(A)	**710**	735	**–**	**–**	–
	OHL output shaft **(B)**	2200	**2200**	2200	2200	**2200**	2200	2200	**2200**	2200	2200	**2200**	2200	–	**–**	–
	Output RPM	33	**17**	11	33	**17**	11	33	**17**	11	33	**17**	11	–	**–**	–
	Input Hp (max) **(C)**	2.86	**1.45**	0.96	2.86	**1.45**	0.96	2.86	**1.45**	0.96	2.86	**1.45**	0.96	–	**–**	–
103.33	Output torque, in-lb	5402	**5388**	5397	5402	**5388**	5397	5402	**5388**	5397	5402	**5388**	5397	–	**–**	–
	OHL input shaft	(A)	**215**	225	(A)	**345**	360	(A)	**455**	470	(A)	**710**	735	**–**	**–**	–
	OHL output shaft **(B)**	2200	**2200**	2200	2200	**2200**	2200	2200	**2200**	2200	2200	**2200**	2200	–	**–**	–
	Output RPM	30	**15**	10	30	**15**	10	30	**15**	10	30	**15**	10	–	**–**	–
	Input Hp (max) **(C)**	2.59	**1.31**	0.87	2.59	**1.31**	0.87	2.59	**1.31**	0.87	2.59	**1.31**	0.87	–	**–**	–
114.40	Output torque, in-lb	5408	**5401**	5397	5408	**5401**	5397	5408	**5401**	5397	5408	**5401**	5397	–	**–**	–
	OHL input shaft	(A)	**215**	225	(A)	**345**	360	(A)	**455**	470	(A)	**710**	735	**–**	**–**	–
	OHL output shaft **(B)**	2200	**2200**	2200	2200	**2200**	2200	2200	**2200**	2200	2200	**2200**	2200	–	**–**	–
	Output RPM	26	**13**	9	26	**13**	9	26	**13**	9	–	**–**	–	–	**–**	–
	Input Hp (max) **(C)**	2.20	**1.11**	0.74	2.20	**1.11**	0.74	2.20	**1.11**	0.74	–	**–**	–	–	**–**	–
134.17	Output torque, in-lb	5397	**5382**	5372	5397	**5382**	5372	5397	**5382**	5372	–	**–**	–	–	**–**	–
	OHL input shaft	(A)	**215**	225	(A)	**345**	360	(A)	**455**	470	–	**–**	–	**–**	**–**	–
	OHL output shaft **(B)**	2200	**2200**	2200	2200	**2200**	2200	2200	**2200**	2200	–	**–**	–	–	**–**	–
	Output RPM	23	**12**	8	23	**12**	8	23	**12**	8	–	**–**	–	–	**–**	–
	Input Hp (max) **(C)**	2.00	**1.01**	0.67	2.00	**1.01**	0.67	2.00	**1.01**	0.67	–	**–**	–	–	**–**	–
148.05	Output torque, in-lb	5399	**5391**	5376	5399	**5391**	5376	5399	**5391**	5376	–	**–**	–	–	**–**	–
	OHL input shaft	(A)	**215**	225	(A)	**345**	360	(A)	**455**	470	–	**–**	–	**–**	**–**	–
	OHL output shaft **(B)**	2200	**2200**	2200	2200	**2200**	2200	2200	**2200**	2200	–	**–**	–	–	**–**	–
	Output RPM	21	**11**	7	21	**11**	7	21	**11**	7	–	**–**	–	–	**–**	–
	Input Hp (max) **(C)**	1.79	**0.91**	0.60	1.79	**0.91**	0.60	1.79	**0.91**	0.60	–	**–**	–	–	**–**	–
164.71	Output torque, in-lb	5388	**5387**	5367	5388	**5387**	5367	5388	**5387**	5367	–	**–**	–	–	**–**	–
	OHL input shaft	(A)	**215**	225	(A)	**345**	360	(A)	**455**	470	–	**–**	–	**–**	**–**	–
	OHL output shaft **(B)**	2200	**2200**	2200	2200	**2200**	2200	2200	**2200**	2200	–	**–**	–	–	**–**	–
	Output RPM	19	**9**	6	19	**9**	6	–	**–**	–	–	**–**	–	–	**–**	–
	Input Hp (max) **(C)**	1.59	**0.81**	0.54	1.59	**0.81**	0.54	–	**–**	–	–	**–**	–	–	**–**	–
185.07	Output torque, in-lb	5388	**5425**	5428	5388	**5425**	5428	–	**–**	–	–	**–**	–	–	**–**	–
	OHL input shaft	(A)	**215**	225	(A)	**345**	360	–	**–**	–	–	**–**	–	–	**–**	–
	OHL output shaft **(B)**	2200	**2200**	2200	2200	**2200**	2200	–	**–**	–	–	**–**	–	–	**–**	–

Service factor: 1.0

(A) (B) (C) - See footnotes page on inside back cover

Blank areas (-) indicate configuration not available

RHB 68

Size: B_683

Triple reduction – Clamp collar, three-piece coupled, separate

NEMA motor frame		56C			—			140TC			180TC			—					210TC
IEC motor frame		71D			80D			90D			100D			112D					—
Separate group		71			80			90			100			112					—
Ratio	Output Rating data	3450	1750	1160	3450	1750	1160	3450	1750	1160	3450	1750	1160	3450	1750	1160	3450	1750	1160
	Output RPM	–	–	–	644	**326**	216	644	**326**	216	644	**326**	216	644	**326**	216	644	**326**	216
	Input Hp (max) **(C)**	–	–	–	4.85	**2.46**	1.63	9.86	**5.01**	3.32	20.42	**10.36**	6.87	23.72	**13.88**	9.19	20.42	**10.36**	6.87
5.36	Output torque, in-lb	–	–	–	475	**475**	475	966	**967**	966	2000	**2001**	2000	2323	**2679**	2678	2000	**2001**	2000
	OHL input shaft	–	–	–	**(A)**	**346**	360	**(A)**	**453**	471	**(A)**	**711**	740	**(A)**	**840**	875	**(A)**	**711**	740
	OHL output shaft **(B)**	–	–	–	**(A)**	**2503**	2503	**(A)**	**2503**	2503	**(A)**	**2503**	2503	**(A)**	**2503**	2503	**(A)**	**2503**	2503
	Output RPM	–	–	–	536	**272**	180	536	**272**	180	536	**272**	180	536	**272**	180	536	**272**	180
	Input Hp (max) **(C)**	–	–	–	4.85	**2.46**	1.63	9.86	**5.01**	3.32	20.42	**10.36**	6.87	20.98	**13.88**	9.19	20.42	**10.36**	6.87
6.44	Output torque, in-lb	–	–	–	570	**570**	570	1161	**1161**	1161	2403	**2404**	2403	2469	**3219**	3217	2403	**2404**	2403
	OHL input shaft	–	–	–	**(A)**	**346**	360	**(A)**	**454**	472	**(A)**	**708**	737	**(A)**	**835**	871	**(A)**	**708**	737
	OHL output shaft **(B)**	–	–	–	**(A)**	**2503**	2503	**(A)**	**2503**	2503	**(A)**	**2503**	2503	**(A)**	**2503**	2503	**(A)**	**2503**	2503
	Output RPM	–	–	–	455	**231**	153	455	**231**	153	455	**231**	153	455	**231**	153	455	**231**	153
	Input Hp (max) **(C)**	–	–	–	4.85	**2.46**	1.60	9.86	**5.00**	3.32	18.80	**10.36**	6.87	18.80	**13.88**	8.79	18.80	**10.36**	6.87
7.58	Output torque, in-lb	–	–	–	671	**672**	671	1366	**1367**	1366	2604	**2830**	2829	2604	**3790**	3621	2604	**2830**	2829
	OHL input shaft	–	–	–	**(A)**	**346**	360	**(A)**	**452**	471	**(A)**	**709**	739	**(A)**	**835**	875	**(A)**	**709**	739
	OHL output shaft **(B)**	–	–	–	**(A)**	**2503**	2503	**(A)**	**2503**	2503	**(A)**	**2503**	2503	**(A)**	**2503**	2503	**(A)**	**2503**	2503
	Output RPM	406	**206**	137	406	**206**	137	406	**206**	137	406	**206**	137	406	**206**	137	406	**206**	137
	Input Hp (max) **(C)**	3.98	**2.02**	1.34	4.85	**2.46**	1.63	9.86	**5.01**	3.32	17.41	**10.36**	6.87	17.41	**13.88**	8.14	17.41	**10.36**	6.87
8.50	Output torque, in-lb	618	**618**	618	752	**753**	752	1531	**1532**	1531	2702	**3171**	3170	2702	**4246**	3757	2702	**3171**	3170
	OHL input shaft	**(A)**	**215**	227	**(A)**	**346**	360	**(A)**	**456**	474	**(A)**	**706**	736	**(A)**	**837**	871	**(A)**	**706**	736
	OHL output shaft **(B)**	2503	**2503**	2503	2503	**2503**	2503	2503	**2503**	2503	2503	**2503**	2503	2503	**2503**	2503	2503	**2503**	2503
	Output RPM	362	**184**	122	362	**184**	122	362	**184**	122	362	**184**	122	362	**184**	122	362	**184**	122
	Input Hp (max) **(C)**	3.98	**2.02**	1.34	4.85	**2.46**	1.63	9.86	**5.01**	3.32	16.11	**10.36**	6.86	16.11	**13.76**	7.53	16.11	**10.36**	6.86
9.52	Output torque, in-lb	692	**693**	692	843	**843**	843	1716	**1717**	1716	2803	**3554**	3552	2803	**4721**	3897	2803	**3554**	3552
	OHL input shaft	**(A)**	**217**	226	**(A)**	**346**	360	**(A)**	**456**	474	**(A)**	**711**	740	**(A)**	**838**	872	**(A)**	**711**	740
	OHL output shaft **(B)**	2503	**2503**	2503	2503	**2503**	2503	2503	**2503**	2503	2503	**2503**	2503	2503	**2503**	2503	2503	**2503**	2503
	Output RPM	332	**168**	112	332	**168**	112	332	**168**	112	332	**168**	112	332	**168**	112	332	**168**	112
	Input Hp (max) **(C)**	3.98	**2.02**	1.34	4.85	**2.46**	1.63	9.86	**5.01**	3.32	15.18	**10.36**	6.87	15.18	**12.94**	7.10	15.18	**10.36**	6.87
10.40	Output torque, in-lb	756	**756**	756	920	**921**	920	1873	**1874**	1873	2883	**3880**	3878	2883	**4846**	4008	2883	**3880**	3878
	OHL input shaft	**(A)**	**218**	226	**(A)**	**346**	360	**(A)**	**455**	474	**(A)**	**708**	738	**(A)**	**839**	873	**(A)**	**708**	738
	OHL output shaft **(B)**	2503	**2503**	2503	2503	**2503**	2503	2503	**2503**	2503	2503	**2503**	2503	2503	**2503**	2503	2503	**2503**	2503
	Output RPM	–	–	–	289	**147**	97	289	**147**	97	289	**147**	97	289	**147**	97	289	**147**	97
	Input Hp (max) **(C)**	–	–	–	4.85	**2.46**	1.63	9.86	**5.01**	3.32	20.42	**10.36**	6.87	20.49	**13.71**	9.19	20.42	**10.36**	6.87
11.94	Output torque, in-lb	–	–	–	1057	**1058**	1057	2152	**2153**	2152	4455	**4458**	4455	4471	**5896**	5965	4455	**4458**	4455
	OHL input shaft	–	–	–	**(A)**	**346**	360	**(A)**	**453**	471	**(A)**	**709**	740	**(A)**	**840**	875	**(A)**	**709**	740
	OHL output shaft **(B)**	–	–	–	2503	**2503**	2503	2503	**2503**	2503	2503	**2503**	2503	2503	**2503**	2503	2503	**2503**	2503
	Output RPM	–	–	–	240	**122**	81	240	**122**	81	240	**122**	81	240	**122**	81	240	**122**	81
	Input Hp (max) **(C)**	–	–	–	4.85	**2.46**	1.63	9.86	**5.01**	3.32	18.02	**10.36**	6.86	18.02	**12.06**	8.43	18.02	**10.36**	6.86
14.35	Output torque, in-lb	–	–	–	1270	**1271**	1270	2585	**2587**	2585	4724	**5355**	5352	4724	**6231**	6569	4724	**5355**	5352
	OHL input shaft	–	–	–	**(A)**	**346**	360	**(A)**	**454**	472	**(A)**	**709**	737	**(A)**	**842**	875	**(A)**	**709**	737
	OHL output shaft **(B)**	–	–	–	2503	**2503**	2503	2503	**2503**	2503	2503	**2503**	2503	2503	**2503**	2503	2503	**2503**	2503
	Output RPM	–	–	–	204	**104**	69	204	**104**	69	204	**104**	69	204	**104**	69	204	**104**	69
	Input Hp (max) **(C)**	–	–	–	4.85	**2.46**	1.63	9.86	**5.01**	3.32	16.08	**10.36**	6.87	16.08	**10.75**	7.52	16.08	**10.36**	6.87
16.89	Output torque, in-lb	–	–	–	1495	**1496**	1495	3044	**3046**	3044	4962	**6305**	6302	4962	**6543**	6899	4962	**6305**	6302
	OHL input shaft	–	–	–	**(A)**	**346**	360	**(A)**	**452**	471	**(A)**	**710**	739	**(A)**	**843**	877	**(A)**	**710**	739
	OHL output shaft **(B)**	–	–	–	2503	**2503**	2503	2503	**2503**	2503	2503	**2503**	2503	2503	**2503**	2503	2503	**2503**	2503
	Output RPM	182	**92**	61	182	**92**	61	182	**92**	61	182	**92**	61	182	**92**	61	182	**92**	61
	Input Hp (max) **(C)**	3.98	**2.02**	1.34	4.85	**2.46**	1.63	9.86	**5.01**	3.32	14.85	**9.93**	6.87	14.85	**9.93**	6.94	14.85	**9.93**	6.87
18.93	Output torque, in-lb	1376	**1377**	1376	1675	**1676**	1675	3411	**3413**	3411	5134	**6770**	7061	5134	**6770**	7138	5134	**6770**	7061
	OHL input shaft	(A)	**215**	227	(A)	**346**	360	(A)	**456**	474	(A)	**710**	736	(A)	**843**	877	(A)	**710**	736
	OHL output shaft **(B)**	2503	**2503**	2503	2503	**2503**	2503	2503	**2503**	2503	2503	**2503**	2503	2503	**2503**	2503	2503	**2503**	2503
	Output RPM	163	**82**	55	163	**82**	55	163	**82**	55	163	**82**	55	163	**82**	55	163	**82**	55
	Input Hp (max) **(C)**	3.98	**2.02**	1.34	4.85	**2.46**	1.63	9.86	**5.01**	3.32	13.71	**9.17**	6.30	13.71	**9.17**	6.30	13.71	**9.17**	6.30
21.22	Output torque, in-lb	1542	**1543**	1542	1878	**1879**	1878	3823	**3825**	3823	5313	**7005**	7258	5313	**7005**	7258	5313	**7005**	7258
	OHL input shaft	(A)	**217**	226	(A)	**346**	360	(A)	**456**	474	(A)	**707**	737	(A)	**844**	878	(A)	**707**	737
	OHL output shaft **(B)**	2503	**2503**	2503	2503	**2503**	2503	2503	**2503**	2503	2503	**2503**	2503	2503	**2503**	2503	2503	**2503**	2503

Service factor: 1.0

(A) (B) (C) - See footnotes page on inside back cover

Blank areas (-) indicate configuration not available

RHB 68

Size: B_683

Triple reduction – Clamp collar, three-piece coupled, separate

NEMA motor frame		56C			—			140TC			180TC			—					210TC
IEC motor frame		71D			80D			90D			100D			112D					—
Separate group		71			80			90			100			112					—
Ratio	Output Rating data	3450	1750	1160	3450	1750	1160	3450	1750	1160	3450	1750	1160	3450	1750	1160	3450	1750	1160
	Output RPM	149	**76**	50	149	**76**	50	149	**76**	50	149	**76**	50	149	**76**	50	149	**76**	50
	Input Hp (max) **(C)**	3.98	**2.02**	1.34	4.85	**2.46**	1.63	9.86	**5.01**	3.32	12.89	**8.62**	5.77	12.89	**8.62**	5.77	12.89	**8.62**	5.77
23.16	Output torque, in-lb	1684	**1685**	1684	2050	**2051**	2050	4173	**4175**	4173	5454	**7192**	7258	5454	**7192**	7258	5454	**7192**	7258
	OHL input shaft	(A)	**218**	226	(A)	**346**	360	(A)	**455**	474	(A)	**709**	739	(A)	**844**	878	(A)	**709**	739
	OHL output shaft **(B)**	2503	**2503**	2503	2503	**2503**	2503	2503	**2503**	2503	2503	**2503**	2503	2503	**2503**	2503	2503	**2503**	2503
	Output RPM	136	**69**	46	136	**69**	46	136	**69**	46	136	**69**	46	136	**69**	46	136	**69**	46
	Input Hp (max) **(C)**	3.98	**2.02**	1.34	4.85	**2.46**	1.63	9.86	**5.01**	3.32	12.08	**7.93**	5.25	12.08	**7.93**	5.25	12.08	**7.93**	5.25
25.42	Output torque, in-lb	1848	**1849**	1848	2250	**2251**	2250	4581	**4583**	4581	5609	**7262**	7258	5609	**7262**	7258	5609	**7262**	7258
	OHL input shaft	(A)	**218**	228	(A)	**346**	360	(A)	**454**	473	(A)	**711**	737	(A)	**844**	879	(A)	**711**	737
	OHL output shaft **(B)**	2503	**2503**	2503	2503	**2503**	2503	2503	**2503**	2503	2503	**2503**	2503	2503	**2503**	2503	2503	**2503**	2503
	Output RPM	123	**63**	41	123	**63**	41	123	**63**	41	123	**63**	41	123	**63**	41	–	–	–
	Input Hp (max) **(C)**	3.98	**2.02**	1.35	4.85	**2.46**	1.63	9.86	**5.01**	3.32	11.29	**7.20**	4.77	11.29	**7.20**	4.77	–	–	–
27.99	Output torque, in-lb	2035	**2036**	2035	2478	**2479**	2478	5044	**5047**	5044	5773	**7262**	7258	5773	**7262**	7258	–	–	–
	OHL input shaft	(A)	**217**	227	(A)	**346**	360	(A)	**453**	472	(A)	**713**	739	(A)	**836**	871	–	–	–
	OHL output shaft **(B)**	2503	**2503**	2503	2503	**2503**	2503	2503	**2503**	2503	2503	**2503**	2503	2503	**2503**	2503	–	–	–
	Output RPM	114	**58**	38	114	**58**	38	114	**58**	38	114	**58**	38	114	**58**	38	–	–	–
	Input Hp (max) **(C)**	3.98	**2.02**	1.34	4.85	**2.46**	1.63	9.86	**5.01**	3.32	10.66	**6.64**	4.40	10.66	**6.42**	4.40	–	–	–
30.38	Output torque, in-lb	2209	**2210**	2209	2689	**2691**	2689	5474	**5478**	5474	5916	**7262**	7258	5916	**7027**	7258	–	–	–
	OHL input shaft	(A)	**218**	227	(A)	**346**	360	(A)	**452**	470	(A)	**714**	740	(A)	**838**	873	–	–	–
	OHL output shaft **(B)**	2503	**2503**	2503	2503	**2503**	2503	2503	**2503**	2503	2503	**2503**	2503	2503	**2503**	2503	–	–	–
	Output RPM	–	–	–	105	**53**	35	105	**53**	35	105	**53**	35	105	**53**	35	–	–	–
	Input Hp (max) **(C)**	–	–	–	4.85	**2.46**	1.63	8.90	**5.01**	3.32	8.90	**5.95**	4.07	8.90	**6.15**	4.07	–	–	–
32.78	Output torque, in-lb	–	–	–	2902	**2903**	2902	5332	**5910**	5907	5332	**7027**	7258	5332	**7262**	7258	–	–	–
	OHL input shaft	–	–	–	(A)	**346**	360	(A)	**453**	471	(A)	**714**	742	(A)	**845**	879	–	–	–
	OHL output shaft **(B)**	–	–	–	2503	**2503**	2503	2503	**2503**	2503	2503	**2503**	2503	2503	**2503**	2503	–	–	–
	Output RPM	–	–	–	88	**44**	30	88	**44**	30	88	**44**	30	88	**44**	30	–	–	–
	Input Hp (max) **(C)**	–	–	–	4.85	**2.46**	1.63	7.83	**5.01**	3.32	7.83	**5.12**	3.39	7.83	**5.12**	3.39	–	–	–
39.39	Output torque, in-lb	–	–	–	3486	**3488**	3486	5633	**7101**	7096	5633	**7262**	7258	5633	**7262**	7258	–	–	–
	OHL input shaft	–	–	–	(A)	**346**	360	(A)	**454**	472	(A)	**715**	743	(A)	**845**	879	–	–	–
	OHL output shaft **(B)**	–	–	–	2503	**2503**	2503	2503	**2503**	2503	2503	**2503**	2503	2503	**2503**	2503	–	–	–
	Output RPM	–	–	–	74	**38**	25	74	**38**	25	74	**38**	25	74	**38**	25	–	–	–
	Input Hp (max) **(C)**	–	–	–	4.85	**2.46**	1.63	6.98	**4.35**	2.88	6.98	**4.35**	2.88	6.98	**4.35**	2.88	–	–	–
46.37	Output torque, in-lb	–	–	–	4104	**4107**	4104	5915	**7262**	7258	5915	**7262**	7258	5915	**7262**	7258	–	–	–
	OHL input shaft	–	–	–	(A)	**346**	360	(A)	**453**	472	(A)	**715**	743	(A)	**845**	879	–	–	–
	OHL output shaft **(B)**	–	–	–	2503	**2503**	2503	2503	**2503**	2503	2503	**2503**	2503	2503	**2503**	2503	–	–	–
	Output RPM	66	**34**	22	66	**34**	22	66	**34**	22	66	**34**	22	66	**34**	22	–	–	–
	Input Hp (max) **(C)**	3.98	**2.02**	1.34	4.85	**2.46**	1.63	6.45	**3.88**	2.57	6.45	**3.88**	2.57	6.45	**3.88**	2.57	–	–	–
51.96	Output torque, in-lb	3778	**3780**	3778	4599	**4602**	4599	6121	**7262**	7258	6121	**7262**	7258	6121	**7262**	7258	–	–	–
	OHL input shaft	(A)	**215**	227	(A)	**346**	360	(A)	**455**	473	(A)	**715**	744	(A)	**845**	871	–	–	–
	OHL output shaft **(B)**	2503	**2503**	2503	2503	**2503**	2503	2503	**2503**	2503	2503	**2503**	2503	2503	**2503**	2503	–	–	–
	Output RPM	59	**30**	20	59	**30**	20	59	**30**	20	59	**30**	20	59	**30**	20	–	–	–
	Input Hp (max) **(C)**	3.98	**2.02**	1.34	4.85	**2.46**	1.63	5.95	**3.46**	2.29	5.95	**3.46**	2.29	5.95	**3.46**	2.29	–	–	–
58.23	Output torque, in-lb	4234	**4236**	4234	5154	**5157**	5154	6334	**7262**	7258	6334	**7262**	7258	6334	**7262**	7258	–	–	–
	OHL input shaft	(A)	**217**	226	(A)	**346**	360	(A)	**456**	474	(A)	**715**	744	(A)	**837**	873	–	–	–
	OHL output shaft **(B)**	2503	**2503**	2503	2503	**2503**	2503	2503	**2503**	2503	2503	**2503**	2503	2503	**2503**	2503	–	–	–
	Output RPM	54	**28**	18	54	**28**	18	54	**28**	18	54	**28**	18	54	**28**	18	–	–	–
	Input Hp (max) **(C)**	3.98	**2.02**	1.34	4.85	**2.46**	1.63	5.60	**3.17**	2.10	5.60	**3.17**	2.10	5.60	**3.17**	2.10	–	–	–
63.57	Output torque, in-lb	4622	**4624**	4622	5627	**5630**	5627	6503	**7262**	7258	6503	**7262**	7258	6503	**7262**	7258	–	–	–
	OHL input shaft	(A)	**218**	226	(A)	**346**	360	(A)	**456**	474	(A)	**708**	744	(A)	**839**	873	–	–	–
	OHL output shaft **(B)**	2503	**2503**	2503	2503	**2503**	2503	2503	**2503**	2503	2503	**2503**	2503	2503	**2503**	2503	–	–	–
	Output RPM	49	**25**	17	49	**25**	17	49	**25**	17	49	**25**	17	49	**25**	17	–	–	–
	Input Hp (max) **(C)**	3.98	**2.02**	1.34	4.85	**2.46**	1.63	5.25	**2.89**	1.91	5.25	**2.89**	1.91	5.25	**2.89**	1.91	–	–	–
69.78	Output torque, in-lb	5073	**5076**	5073	6176	**6180**	6176	6688	**7262**	7258	6688	**7262**	7258	6688	**7262**	7258	–	–	–
	OHL input shaft	(A)	**218**	228	(A)	**346**	360	(A)	**456**	475	(A)	**709**	744	(A)	**840**	874	–	–	–
	OHL output shaft **(B)**	2503	**2503**	2503	2503	**2503**	2503	2503	**2503**	2503	2503	**2503**	2503	2503	**2503**	2503	–	–	–

Service factor: 1.0

(A) (B) (C) - See footnotes page on inside back cover

Blank areas (-) indicate configuration not available

RHB 68

Size: B_683

Triple reduction – Clamp collar, three-piece coupled, separate

NEMA motor frame		56C			—			140TC			180TC			—					210TC
IEC motor frame		71D			80D			90D			100D			112D					—
Separate group		71			80			90			100			112					—
Ratio	Output Rating data	3450	1750	1160	3450	1750	1160	3450	1750	1160	3450	1750	1160	3450	1750	1160	3450	1750	1160
	Output RPM	45	**23**	15	45	**23**	15	45	**23**	15	45	**23**	15	45	**23**	15	–	–	–
	Input Hp (max) **(C)**	3.98	**2.02**	1.34	4.85	**2.46**	1.63	4.90	**2.62**	1.74	4.90	**2.62**	1.74	4.90	**2.62**	1.74	–	–	–
76.84	Output torque, in-lb	5586	**5590**	5586	6801	**6805**	6801	6883	**7262**	7258	6883	**7262**	7258	6883	**7262**	7258	–	–	–
	OHL input shaft	(A)	**217**	227	(A)	**346**	360	(A)	**457**	475	(A)	**709**	737	(A)	**841**	876	–	–	–
	OHL output shaft **(B)**	2503	**2503**	2503	2503	**2503**	2503	2503	**2503**	2503	2503	**2503**	2503	2503	**2503**	2503	–	–	–
	Output RPM	41	**21**	14	41	**21**	14	41	**21**	14	41	**21**	14	41	**21**	14	–	–	–
	Input Hp (max) **(C)**	3.98	**2.02**	1.34	4.63	**2.42**	1.60	4.63	**2.42**	1.60	4.63	**2.42**	1.60	4.63	**2.42**	1.60	–	–	–
83.40	Output torque, in-lb	6063	**6067**	6063	7055	**7262**	7258	7055	**7262**	7258	7055	**7262**	7258	7055	**7262**	7258	–	–	–
	OHL input shaft	(A)	**218**	227	(A)	**346**	360	(A)	**457**	475	(A)	**710**	737	(A)	**842**	876	–	–	–
	OHL output shaft **(B)**	2503	**2503**	2503	2503	**2503**	2503	2503	**2503**	2503	2503	**2503**	2503	2503	**2503**	2503	–	–	–
	Output RPM	38	**19**	13	38	**19**	13	38	**19**	13	38	**19**	13	38	**19**	13	–	–	–
	Input Hp (max) **(C)**	3.98	**2.02**	1.34	4.36	**2.22**	1.47	4.36	**2.22**	1.47	4.36	**2.22**	1.47	4.36	**2.22**	1.47	–	–	–
90.89	Output torque, in-lb	6418	**6612**	6608	7239	**7262**	7258	7239	**7262**	7258	7239	**7262**	7258	7239	**7262**	7258	–	–	–
	OHL input shaft	(A)	**218**	226	(A)	**346**	360	(A)	**457**	476	(A)	**708**	738	(A)	**842**	877	–	–	–
	OHL output shaft **(B)**	2503	**2503**	2503	2503	**2503**	2503	2503	**2503**	2503	2503	**2503**	2503	2503	**2503**	2503	–	–	–
	Output RPM	35	**18**	12	35	**18**	12	35	**18**	12	35	**18**	12	35	**18**	12	–	–	–
	Input Hp (max) **(C)**	3.98	**1.97**	1.34	3.99	**2.03**	1.34	3.99	**2.03**	1.34	3.99	**2.03**	1.34	3.99	**2.03**	1.34	–	–	–
99.55	Output torque, in-lb	6559	**7046**	7237	7258	**7262**	7258	7258	**7262**	7258	7258	**7262**	7258	7258	**7262**	7258	–	–	–
	OHL input shaft	(A)	**217**	227	(A)	**346**	360	(A)	**457**	476	(A)	**709**	739	(A)	**843**	877	–	–	–
	OHL output shaft **(B)**	2503	**2503**	2503	2503	**2503**	2503	2503	**2503**	2503	2503	**2503**	2503	2503	**2503**	2503	–	–	–
	Output RPM	32	**16**	11	32	**16**	11	32	**16**	11	32	**16**	11	32	**16**	11	–	–	–
	Input Hp (max) **(C)**	3.62	**1.82**	1.22	3.62	**1.84**	1.22	3.62	**1.84**	1.22	3.62	**1.84**	1.22	3.62	**1.84**	1.22	–	–	–
109.64	Output torque, in-lb	6699	**7197**	7258	7258	**7262**	7258	7258	**7262**	7258	7258	**7262**	7258	7258	**7262**	7258	–	–	–
	OHL input shaft	(A)	**209**	219	(A)	**346**	360	(A)	**457**	476	(A)	**709**	740	(A)	**843**	878	–	–	–
	OHL output shaft **(B)**	2503	**2503**	2503	2503	**2503**	2503	2503	**2503**	2503	2503	**2503**	2503	2503	**2503**	2503	–	–	–
	Output RPM	27	**14**	9	27	**14**	9	27	**14**	9	27	**14**	9	27	**14**	9	–	–	–
	Input Hp (max) **(C)**	3.15	**1.60**	1.06	3.15	**1.60**	1.06	3.15	**1.60**	1.06	3.15	**1.60**	1.06	3.15	**1.60**	1.06	–	–	–
126.09	Output torque, in-lb	6890	**7262**	7258	7258	**7262**	7258	7258	**7262**	7258	7258	**7262**	7258	7258	**7262**	7258	–	–	–
	OHL input shaft	(A)	**210**	219	(A)	**346**	360	(A)	**457**	476	(A)	**710**	741	(A)	**844**	878	–	–	–
	OHL output shaft **(B)**	2503	**2503**	2503	2503	**2503**	2503	2503	**2503**	2503	2503	**2503**	2503	2503	**2503**	2503	–	–	–
	Output RPM	25	**13**	9	25	**13**	9	25	**13**	9	25	**13**	9	25	**13**	9	–	–	–
	Input Hp (max) **(C)**	2.91	**1.48**	0.98	2.91	**1.48**	0.98	2.91	**1.48**	0.98	2.91	**1.48**	0.98	2.91	**1.48**	0.98	–	–	–
136.60	Output torque, in-lb	6992	**7262**	7258	7258	**7262**	7258	7258	**7262**	7258	7258	**7262**	7258	7258	**7262**	7258	–	–	–
	OHL input shaft	(A)	**209**	219	(A)	**346**	360	(A)	**457**	476	(A)	**709**	741	(A)	**844**	879	–	–	–
	OHL output shaft **(B)**	2503	**2503**	2503	2503	**2503**	2503	2503	**2503**	2503	2503	**2503**	2503	2503	**2503**	2503	–	–	–
	Output RPM	23	**12**	8	23	**12**	8	23	**12**	8	23	**12**	8	–	–	–	–	–	–
	Input Hp (max) **(C)**	2.63	**1.34**	0.88	2.63	**1.34**	0.88	2.63	**1.34**	0.88	2.63	**1.34**	0.88	–	–	–	–	–	–
150.98	Output torque, in-lb	7112	**7262**	7258	7258	**7262**	7258	7258	**7262**	7258	7258	**7262**	7258	–	–	–	–	–	–
	OHL input shaft	(A)	**210**	218	(A)	**346**	360	(A)	**453**	472	(A)	**710**	742	–	–	–	–	–	–
	OHL output shaft **(B)**	2503	**2503**	2503	2503	**2503**	2503	2503	**2503**	2503	2503	**2503**	2503	–	–	–	–	–	–
	Output RPM	20	**10**	7	20	**10**	7	20	**10**	7	–	–	–	–	–	–	–	–	–
	Input Hp (max) **(C)**	2.26	**1.14**	0.76	2.26	**1.14**	0.76	2.26	**1.14**	0.76	–	–	–	–	–	–	–	–	–
176.14	Output torque, in-lb	7258	**7262**	7258	7258	**7262**	7258	7258	**7262**	7258	–	–	–	–	–	–	–	–	–
	OHL input shaft	(A)	**211**	218	(A)	**343**	357	(A)	**455**	473	–	–	–	–	–	–	–	–	–
	OHL output shaft **(B)**	2503	**2503**	2503	2503	**2503**	2503	2503	**2503**	2503	–	–	–	–	–	–	–	–	–
	Output RPM	18	**9**	6	18	**9**	6	18	**9**	6	–	–	–	–	–	–	–	–	–
	Input Hp (max) **(C)**	2.03	**1.03**	0.68	2.03	**1.03**	0.68	2.03	**1.03**	0.68	–	–	–	–	–	–	–	–	–
196.07	Output torque, in-lb	7258	**7262**	7258	7258	**7262**	7258	7258	**7262**	7258	–	–	–	–	–	–	–	–	–
	OHL input shaft	(A)	**211**	220	(A)	**344**	357	(A)	**455**	473	–	–	–	–	–	–	–	–	–
	OHL output shaft **(B)**	2503	**2503**	2503	2503	**2503**	2503	2503	**2503**	2503	–	–	–	–	–	–	–	–	–
	Output RPM	16	**8**	5	16	**8**	5	16	**8**	5	–	–	–	–	–	–	–	–	–
	Input Hp (max) **(C)**	1.84	**0.93**	0.62	1.84	**0.93**	0.62	1.84	**0.93**	0.62	–	–	–	–	–	–	–	–	–
215.68	Output torque, in-lb	7258	**7262**	7258	7258	**7262**	7258	7258	**7262**	7258	–	–	–	–	–	–	–	–	–
	OHL input shaft	(A)	**211**	219	(A)	**344**	358	(A)	**455**	474	–	–	–	–	–	–	–	–	–
	OHL output shaft **(B)**	2503	**2503**	2503	2503	**2503**	2503	2503	**2503**	2503	–	–	–	–	–	–	–	–	–
	Output RPM	14	**7**	5	14	**7**	5	–	–	–	–	–	–	–	–	–	–	–	–
	Input Hp (max) **(C)**	1.63	**0.83**	0.55	1.63	**0.83**	0.55	–	–	–	–	–	–	–	–	–	–	–	–
243.72	Output torque, in-lb	7258	**7262**	7258	7258	**7262**	7258	–	–	–	–	–	–	–	–	–	–	–	–
	OHL input shaft	(A)	**211**	220	(A)	**345**	358	–	–	–	–	–	–	–	–	–	–	–	–
	OHL output shaft **(B)**	2503	**2503**	2503	2503	**2503**	2503	–	–	–	–	–	–	–	–	–	–	–	–

Service factor: 1.0

(A) (B) (C) - See footnotes page on inside back cover

Blank areas (-) indicate configuration not available

RHB 68

Size: B_684

Four-stage reduction – Clamp collar, three-piece coupled, separate

NEMA motor frame		56C			—			140TC			180TC		
IEC motor frame		71D			80D			90D			100D		
Separate group		71			80			90			100		
Ratio	Output Rating data	3450	1750	1160	3450	1750	1160	3450	1750	1160	3450	1750	1160
	Output RPM	13.86	**7.03**	4.66	13.86	**7.03**	4.66	13.86	**7.03**	4.66	13.86	**7.03**	4.66
	Input Hp (max) **(C)**	1.60	**0.81**	0.54	1.60	**0.81**	0.54	1.60	**0.81**	0.54	1.60	**0.81**	0.54
248.88	Output torque, in-lb	7262	**7262**	7262	7262	**7262**	7262	7262	**7262**	7262	7262	**7262**	7262
	OHL input shaft	(A)	**(A)**	(A)	**(A)**	**(A)**	(A)	**(A)**	**(A)**	(A)	**(A)**	**(A)**	(A)
	OHL output shaft **(B)**	2503	**2503**	2503	**2503**	**2503**	2503	**2503**	**2503**	2503	**2503**	**2503**	2503
	Output RPM	12.32	**6.25**	4.14	12.32	**6.25**	4.14	12.32	**6.25**	4.14	12.32	**6.25**	4.14
	Input Hp (max) **(C)**	1.42	**0.72**	0.48	1.42	**0.72**	0.48	1.42	**0.72**	0.48	1.42	**0.72**	0.48
280.06	Output torque, in-lb	7262	**7262**	7262	7262	**7262**	7262	7262	**7262**	7262	7262	**7262**	7262
	OHL input shaft	(A)	**(A)**	(A)	**(A)**	**(A)**	(A)	**(A)**	**(A)**	(A)	**(A)**	**(A)**	(A)
	OHL output shaft **(B)**	2503	**2503**	2503	**2503**	**2503**	2503	**2503**	**2503**	2503	**2503**	**2503**	2503
	Output RPM	10.94	**5.55**	3.68	10.94	**5.55**	3.68	10.94	**5.55**	3.68	10.94	**5.55**	3.68
	Input Hp (max) **(C)**	1.26	**0.64**	0.42	1.26	**0.64**	0.42	1.26	**0.64**	0.42	1.26	**0.64**	0.42
315.23	Output torque, in-lb	7262	**7262**	7262	7262	**7262**	7262	7262	**7262**	7262	7262	**7262**	7262
	OHL input shaft	(A)	**(A)**	(A)	**(A)**	**(A)**	(A)	**(A)**	**(A)**	(A)	**(A)**	**(A)**	(A)
	OHL output shaft **(B)**	2503	**2503**	2503	**2503**	**2503**	2503	**2503**	**2503**	2503	**2503**	**2503**	2503
	Output RPM	9.51	**4.82**	3.20	9.51	**4.82**	3.20	9.51	**4.82**	3.20	9.51	**4.82**	3.20
	Input Hp (max) **(C)**	1.10	**0.56**	0.37	1.10	**0.56**	0.37	1.10	**0.56**	0.37	1.10	**0.56**	0.37
362.91	Output torque, in-lb	7262	**7262**	7262	7262	**7262**	7262	7262	**7262**	7262	7262	**7262**	7262
	OHL input shaft	**(A)**	**(A)**	(A)	**(A)**	**(A)**	(A)	**(A)**	**(A)**	(A)	**(A)**	**(A)**	(A)
	OHL output shaft **(B)**	2503	**2503**	2503	2503	**2503**	2503	2503	**2503**	2503	2503	**2503**	2503
	Output RPM	8.27	**4.19**	2.78	8.27	**4.19**	2.78	8.27	**4.19**	2.78	8.27	**4.19**	2.78
	Input Hp (max) **(C)**	0.95	**0.48**	0.32	0.95	**0.48**	0.32	0.95	**0.48**	0.32	0.95	**0.48**	0.32
417.36	Output torque, in-lb	7262	**7262**	7262	7262	**7262**	7262	7262	**7262**	7262	7262	**7262**	7262
	OHL input shaft	**(A)**	**(A)**	(A)	**(A)**	**(A)**	(A)	**(A)**	**(A)**	(A)	**(A)**	**(A)**	(A)
	OHL output shaft **(B)**	2503	**2503**	2503	2503	**2503**	2503	2503	**2503**	2503	2503	**2503**	2503
	Output RPM	7.33	**3.72**	2.46	7.33	**3.72**	2.46	7.33	**3.72**	2.46	7.33	**3.72**	2.46
	Input Hp (max) **(C)**	0.84	**0.43**	0.28	0.84	**0.43**	0.28	0.84	**0.43**	0.28	0.84	**0.43**	0.28
470.81	Output torque, in-lb	7262	**7262**	7262	7262	**7262**	7262	7262	**7262**	7262	7262	**7262**	7262
	OHL input shaft	**(A)**	**(A)**	(A)	**(A)**	**(A)**	(A)	**(A)**	**(A)**	(A)	**(A)**	**(A)**	(A)
	OHL output shaft **(B)**	2503	**2503**	2503	2503	**2503**	2503	2503	**2503**	2503	2503	**2503**	2503
	Output RPM	6.32	**3.21**	2.12	6.32	**3.21**	2.12	6.32	**3.21**	2.12	6.32	**3.21**	2.12
	Input Hp (max) **(C)**	0.73	**0.37**	0.24	0.73	**0.37**	0.24	0.73	**0.37**	0.24	0.73	**0.37**	0.24
545.93	Output torque, in-lb	7262	**7262**	7262	7262	**7262**	7262	7262	**7262**	7262	7262	**7262**	7262
	OHL input shaft	(A)	**(A)**	(A)	**(A)**	**(A)**	(A)	**(A)**	**(A)**	(A)	**(A)**	**(A)**	(A)
	OHL output shaft **(B)**	2503	**2503**	2503	2503	**2503**	2503	2503	**2503**	2503	2503	**2503**	2503
	Output RPM	5.64	**2.86**	1.90	5.64	**2.86**	1.90	5.64	**2.86**	1.90	–	**–**	–
	Input Hp (max) **(C)**	0.65	**0.33**	0.22	0.65	**0.33**	0.22	0.65	**0.33**	0.22	–	**–**	–
611.69	Output torque, in-lb	7262	**7262**	7262	7262	**7262**	7262	7262	**7262**	7262	–	**–**	–
	OHL input shaft	(A)	**(A)**	(A)	**(A)**	**(A)**	(A)	**(A)**	**(A)**	(A)	**–**	**–**	–
	OHL output shaft **(B)**	2503	**2503**	2503	2503	**2503**	2503	2503	**2503**	2503	–	**–**	–
	Output RPM	4.98	**2.53**	1.68	4.98	**2.53**	1.68	–	**–**	–	–	**–**	–
	Input Hp (max) **(C)**	0.57	**0.29**	0.19	0.57	**0.29**	0.19	–	**–**	–	–	**–**	–
692.22	Output torque, in-lb	7262	**7262**	7262	7262	**7262**	7262	–	**–**	–	–	**–**	–
	OHL input shaft	(A)	**(A)**	(A)	**(A)**	**(A)**	(A)	**–**	**–**	–	**–**	**–**	–
	OHL output shaft **(B)**	2503	**2503**	2503	2503	**2503**	2503	–	**–**	–	–	**–**	–
	Output RPM	4.28	**2.17**	1.44	4.28	**2.17**	1.44	4.28	**2.17**	1.44	4.28	**2.17**	1.44
	Input Hp (max) **(C)**	0.49	**0.25**	0.17	0.49	**0.25**	0.17	0.49	**0.25**	0.17	0.49	**0.25**	0.17
806.72	Output torque, in-lb	7262	**7262**	7262	7262	**7262**	7262	7262	**7262**	7262	7262	**7262**	7262
	OHL input shaft	(A)	**(A)**	(A)	(A)	**(A)**	(A)	(A)	**(A)**	(A)	(A)	**(A)**	(A)
	OHL output shaft **(B)**	2503	**2503**	2503	2503	**2503**	2503	2503	**2503**	2503	2503	**2503**	2503
	Output RPM	3.80	**1.93**	1.28	3.80	**1.93**	1.28	3.80	**1.93**	1.28	–	**–**	–
	Input Hp (max) **(C)**	0.44	**0.22**	0.15	0.44	**0.22**	0.15	0.44	**0.22**	0.15	–	**–**	–
907.85	Output torque, in-lb	7262	**7262**	7262	7262	**7262**	7262	7262	**7262**	7262	–	**–**	–
	OHL input shaft	(A)	**(A)**	(A)	(A)	**(A)**	(A)	(A)	**(A)**	(A)	–	**–**	–
	OHL output shaft **(B)**	2503	**2503**	2503	2503	**2503**	2503	2503	**2503**	2503	–	**–**	–

Service factor: 1.0

(A) (B) (C) - See footnotes page on inside back cover

Blank areas (-) indicate configuration not available

RHB 68

Size: B_684

Four-stage reduction – Clamp collar, three-piece coupled, separate

NEMA motor frame		56C			—			140TC			180TC		
IEC motor frame		71D			80D			90D			100D		
Separate group		71			80			90			100		
Ratio	Output Rating data	3450	1750	1160	3450	1750	1160	3450	1750	1160	3450	1750	1160
	Output RPM	3.31	**1.68**	1.11	3.31	**1.68**	1.11	3.31	**1.68**	1.11	–	–	–
	Input Hp (max) **(C)**	0.38	**0.19**	0.13	0.38	**0.19**	0.13	0.38	**0.19**	0.13	–	–	–
1042.75	Output torque, in-lb	7262	**7262**	7262	7262	**7262**	7262	7262	**7262**	7262	–	–	–
	OHL input shaft	(A)	**(A)**	(A)	(A)	**(A)**	(A)	(A)	**(A)**	(A)	–	–	–
	OHL output shaft **(B)**	2503	**2503**	2503	2503	**2503**	2503	2503	**2503**	2503	–	–	–
	Output RPM	2.93	**1.49**	0.99	2.93	**1.49**	0.99	–	–	–	–	–	–
	Input Hp (max) **(C)**	0.34	**0.17**	0.11	0.34	**0.17**	0.11	–	–	–	–	–	–
1176.42	Output torque, in-lb	7262	**7262**	7262	7262	**7262**	7262	–	–	–	–	–	–
	OHL input shaft	(A)	**(A)**	(A)	(A)	**(A)**	(A)	–	–	–	–	–	–
	OHL output shaft **(B)**	2503	**2503**	2503	2503	**2503**	2503	–	–	–	–	–	–
	Output RPM	2.61	**1.33**	0.88	2.61	**1.33**	0.88	2.61	**1.33**	0.88	–	–	–
	Input Hp (max) **(C)**	0.30	**0.15**	0.10	0.30	**0.15**	0.10	0.30	**0.15**	0.10	–	–	–
1319.55	Output torque, in-lb	7262	**7262**	7262	7262	**7262**	7262	7262	**7262**	7262	–	–	–
	OHL input shaft	(A)	**(A)**	(A)	(A)	**(A)**	(A)	(A)	**(A)**	(A)	–	–	–
	OHL output shaft **(B)**	2503	**2503**	2503	2503	**2503**	2503	2503	**2503**	2503	–	–	–
	Output RPM	2.22	**1.13**	0.75	2.22	**1.13**	0.75	2.22	**1.13**	0.75	–	–	–
	Input Hp (max) **(C)**	0.26	**0.13**	0.09	0.26	**0.13**	0.09	0.26	**0.13**	0.09	–	–	–
1552.90	Output torque, in-lb	7262	**7262**	7262	7262	**7262**	7262	7262	**7262**	7262	–	–	–
	OHL input shaft	(A)	**(A)**	(A)	(A)	**(A)**	(A)	(A)	**(A)**	(A)	–	–	–
	OHL output shaft **(B)**	2503	**2503**	2503	2503	**2503**	2503	2503	**2503**	2503	–	–	–
	Output RPM	1.97	**1.00**	0.66	1.97	**1.00**	0.66	1.97	**1.00**	0.66	–	–	–
	Input Hp (max) **(C)**	0.23	**0.11**	0.08	0.23	**0.11**	0.08	0.23	**0.11**	0.08	–	–	–
1754.78	Output torque, in-lb	7262	**7262**	7262	7262	**7262**	7262	7262	**7262**	7262	–	–	–
	OHL input shaft	(A)	**(A)**	(A)	(A)	**(A)**	(A)	(A)	**(A)**	(A)	–	–	–
	OHL output shaft **(B)**	2503	**2503**	2503	2503	**2503**	2503	2503	**2503**	2503	–	–	–
	Output RPM	1.71	**0.87**	0.58	1.71	**0.87**	0.58	–	–	–	–	–	–
	Input Hp (max) **(C)**	0.20	**0.10**	0.07	0.20	**0.10**	0.07	–	–	–	–	–	–
2012.29	Output torque, in-lb	7262	**7262**	7262	7262	**7262**	7262	–	–	–	–	–	–
	OHL input shaft	(A)	**(A)**	(A)	(A)	**(A)**	(A)	–	–	–	–	–	–
	OHL output shaft **(B)**	2503	**2503**	2503	2503	**2503**	2503	–	–	–	–	–	–

Service factor: 1.0

(A) (B) (C) - See footnotes page on inside back cover

Blank areas (-) indicate configuration not available

RHB 68

Size: B_684

Four-stage reduction – Clamp collar, three-piece coupled, separate

NEMA motor frame		56C			—			140TC			180TC		
IEC motor frame		71D			80D			90D			100D		
Separate group		71			80			90			100		
Ratio	Output Rating data	3450	1750	1160	3450	1750	1160	3450	1750	1160	3450	1750	1160
	Output RPM	1.75	**0.89**	0.59	1.75	**0.89**	0.59	1.75	**0.89**	0.59	1.75	**0.89**	0.59
	Input Hp (max) **(C)**	0.20	**0.10**	0.07	0.20	**0.10**	0.07	0.20	**0.10**	0.07	0.20	**0.10**	0.07
1972.05	Output torque, in-lb	7262	**7262**	7262	7262	**7262**	7262	7262	**7262**	7262	7262	**7262**	7262
	OHL input shaft	(A)	**(A)**	(A)	**(A)**	**(A)**	(A)	**(A)**	**(A)**	(A)	**(A)**	**(A)**	(A)
	OHL output shaft **(B)**	2503	**2503**	2503	**2503**	**2503**	2503	**2503**	**2503**	2503	**2503**	**2503**	2503
	Output RPM	1.55	**0.79**	0.52	1.55	**0.79**	0.52	1.55	**0.79**	0.52	–	**–**	–
	Input Hp (max) **(C)**	0.18	**0.09**	0.06	0.18	**0.09**	0.06	0.18	**0.09**	0.06	–	**–**	–
2226.81	Output torque, in-lb	7262	**7262**	7262	7262	**7262**	7262	7262	**7262**	7262	–	**–**	–
	OHL input shaft	(A)	**(A)**	(A)	**(A)**	**(A)**	(A)	**(A)**	**(A)**	(A)	**–**	**–**	–
	OHL output shaft **(B)**	2503	**2503**	2503	**2503**	**2503**	2503	**2503**	**2503**	2503	**–**	**–**	–
	Output RPM	1.34	**0.68**	0.45	1.34	**0.68**	0.45	1.34	**0.68**	0.45	1.34	**0.68**	0.45
	Input Hp (max) **(C)**	0.15	**0.08**	0.05	0.15	**0.08**	0.05	0.15	**0.08**	0.05	0.15	**0.08**	0.05
2576.12	Output torque, in-lb	7262	**7262**	7262	7262	**7262**	7262	7262	**7262**	7262	7262	**7262**	7262
	OHL input shaft	(A)	**(A)**	(A)	**(A)**	**(A)**	(A)	**(A)**	**(A)**	(A)	**(A)**	**(A)**	(A)
	OHL output shaft **(B)**	2503	**2503**	2503	**2503**	**2503**	2503	**2503**	**2503**	2503	**2503**	**2503**	2503
	Output RPM	1.19	**0.61**	0.40	1.19	**0.61**	0.40	1.19	**0.61**	0.40	–	**–**	–
	Input Hp (max) **(C)**	0.14	**0.07**	0.05	0.14	**0.07**	0.05	0.14	**0.07**	0.05	–	**–**	–
2890.30	Output torque, in-lb	7262	**7262**	7262	7262	**7262**	7262	7262	**7262**	7262	–	**–**	–
	OHL input shaft	**(A)**	**(A)**	(A)	**(A)**	**(A)**	(A)	**(A)**	**(A)**	(A)	**–**	**–**	–
	OHL output shaft **(B)**	2503	**2503**	2503	2503	**2503**	2503	2503	**2503**	2503	–	**–**	–
	Output RPM	1.02	**0.52**	0.34	1.02	**0.52**	0.34	1.02	**0.52**	0.34	–	**–**	–
	Input Hp (max) **(C)**	0.12	**0.06**	0.04	0.12	**0.06**	0.04	0.12	**0.06**	0.04	–	**–**	–
3388.68	Output torque, in-lb	7262	**7262**	7262	7262	**7262**	7262	7262	**7262**	7262	–	**–**	–
	OHL input shaft	**(A)**	**(A)**	(A)	**(A)**	**(A)**	(A)	**(A)**	**(A)**	(A)	**–**	**–**	–
	OHL output shaft **(B)**	2503	**2503**	2503	2503	**2503**	2503	2503	**2503**	2503	–	**–**	–
	Output RPM	0.90	**0.45**	0.30	0.90	**0.45**	0.30	0.90	**0.45**	0.30	0.90	**0.45**	0.30
	Input Hp (max) **(C)**	0.10	**0.05**	0.03	0.10	**0.05**	0.03	0.10	**0.05**	0.03	0.10	**0.05**	0.03
3850.81	Output Torque, In–Lb	7262	**7262**	7262	7262	**7262**	7262	7262	**7262**	7262	7262	**7262**	7262
	OHL input shaft	**(A)**	**(A)**	(A)	**(A)**	**(A)**	(A)	**(A)**	**(A)**	(A)	**(A)**	**(A)**	(A)
	OHL output shaft **(B)**	2503	**2503**	2503	2503	**2503**	2503	2503	**2503**	2503	2503	**2503**	2503
	Output RPM	0.79	**0.40**	0.27	0.79	**0.40**	0.27	0.79	**0.40**	0.27	–	**–**	–
	Input Hp (max) **(C)**	0.09	**0.05**	0.03	0.09	**0.05**	0.03	0.09	**0.05**	0.03	–	**–**	–
4343.88	Output torque, in-lb	7262	**7262**	7262	7262	**7262**	7262	7262	**7262**	7262	–	**–**	–
	OHL input shaft	(A)	**(A)**	(A)	**(A)**	**(A)**	(A)	**(A)**	**(A)**	(A)	**–**	**–**	–
	OHL output shaft **(B)**	2503	**2503**	2503	2503	**2503**	2503	2503	**2503**	2503	–	**–**	–
	Output RPM	0.70	**0.35**	0.23	0.70	**0.35**	0.23	–	**–**	–	–	**–**	–
	Input Hp (max) **(C)**	0.08	**0.04**	0.03	0.08	**0.04**	0.03	–	**–**	–	–	**–**	–
4947.77	Output torque, in-lb	7262	**7262**	7262	7262	**7262**	7262	–	**–**	–	–	**–**	–
	OHL input shaft	(A)	**(A)**	(A)	**(A)**	**(A)**	(A)	**–**	**–**	–	**–**	**–**	–
	OHL output shaft **(B)**	2503	**2503**	2503	2503	**2503**	2503	–	**–**	–	–	**–**	–
	Output RPM	0.62	**0.31**	0.21	0.62	**0.31**	0.21	0.62	**0.31**	0.21	–	**–**	–
	Input Hp (max) **(C)**	0.07	**0.04**	0.02	0.07	**0.04**	0.02	0.07	**0.04**	0.02	–	**–**	–
5601.25	Output torque, in-lb	7262	**7262**	7262	7262	**7262**	7262	7262	**7262**	7262	–	**–**	–
	OHL input shaft	(A)	**(A)**	(A)	**(A)**	**(A)**	(A)	**(A)**	**(A)**	(A)	**–**	**–**	–
	OHL output shaft **(B)**	2503	**2503**	2503	2503	**2503**	2503	2503	**2503**	2503	–	**–**	–
	Output RPM	0.52	**0.26**	0.17	0.52	**0.26**	0.17	–	**–**	–	–	**–**	–
	Input Hp (max) **(C)**	0.06	**0.03**	0.02	0.06	**0.03**	0.02	–	**–**	–	–	**–**	–
6661.24	Output torque, in-lb	7262	**7262**	7262	7262	**7262**	7262	–	**–**	–	–	**–**	–
	OHL input shaft	(A)	**(A)**	(A)	(A)	**(A)**	(A)	–	**–**	–	–	**–**	–
	OHL output shaft **(B)**	2503	**2503**	2503	2503	**2503**	2503	–	**–**	–	–	**–**	–
	Output RPM	0.50	**0.25**	0.17	0.50	**0.25**	0.17	–	**–**	–	–	**–**	–
	Input Hp (max) **(C)**	0.06	**0.03**	0.02	0.06	**0.03**	0.02	–	**–**	–	–	**–**	–
6911.73	Output torque, in-lb	7262	**7262**	7262	7262	**7262**	7262	–	**–**	–	–	**–**	–
	OHL input shaft	(A)	**(A)**	(A)	(A)	**(A)**	(A)	–	**–**	–	–	**–**	–
	OHL output shaft **(B)**	2503	**2503**	2503	2503	**2503**	2503	–	**–**	–	–	**–**	–
	Output RPM	0.47	**0.24**	0.16	0.47	**0.24**	0.16	0.47	**0.24**	0.16	–	**–**	–
	Input Hp (max) **(C)**	0.05	**0.03**	0.02	0.05	**0.03**	0.02	0.05	**0.03**	0.02	–	**–**	–
7341.75	Output torque, in-lb	7262	**7262**	7262	7262	**7262**	7262	7262	**7262**	7262	–	**–**	–
	OHL input shaft	(A)	**(A)**	(A)	(A)	**(A)**	(A)	(A)	**(A)**	(A)	–	**–**	–
	OHL output shaft **(B)**	2503	**2503**	2503	2503	**2503**	2503	2503	**2503**	2503	–	**–**	–

Service factor: 1.0

(A) (B) (C) - See footnotes page on inside back cover

Blank areas (-) indicate configuration not available

RHB 88

Size: B_883

Triple reduction – Clamp collar, three-piece coupled, separate

NEMA motor frame		56C			—			140TC			180TC			—			210TC			250TC		
IEC motor frame		71D			80D			90D			100D			112D			132D			-		
Separate group		71			80			90			100			112			132			-		
Ratio	Output Rating data	3450	1750	1160	3450	1750	1160	3450	1750	1160	3450	1750	1160	3450	1750	1160	3450	1750	1160	3450	1750	1160
	Output RPM	–	–	–	–	–	–	–	–	–	622	316	209	622	316	209	622	316	18.12	622	316	209
	Input Hp (max) (C)	–	–	–	–	–	–	–	–	–	20.42	10.36	6.87	27.34	13.88	9.19	42.96	26.94	5459	42.96	26.94	18.12
5.54	Output torque, in-lb	–	–	–	–	–	–	–	–	–	2068	2069	2068	2769	2770	2769	4350	5377	4518	4350	5377	5459
	OHL input shaft	–	–	–	–	–	–	–	–	–	(A)	713	742	(A)	843	877	(A)	947	994	(A)	947	994
	OHL output shaft (B)	–	–	–	–	–	–	–	–	–	(A)	4505	4512	(A)	4505	4512	(A)	4505	4512	(A)	4505	4512
	Output RPM	–	–	–	–	–	–	–	–	–	516	262	173	516	262	173	516	262	173	516	262	173
	Input Hp (max) (C)	–	–	–	–	–	–	–	–	–	20.42	10.36	6.87	27.34	13.88	9.19	37.92	25.39	17.09	37.92	25.39	17.09
6.69	Output torque, in-lb	–	–	–	–	–	–	–	–	–	2495	2496	2495	3340	3342	3340	4633	6116	6209	4633	6116	6209
	OHL input shaft	–	–	–	–	–	–	–	–	–	(A)	713	742	(A)	843	877	(A)	946	994	(A)	946	994
	OHL output shaft (B)	–	–	–	–	–	–	–	–	–	(A)	4505	4512	(A)	4505	4512	(A)	4505	4512	(A)	4505	4512
	Output RPM	–	–	–	430	218	145	430	218	145	430	218	145	430	218	145	430	218	145	430	218	145
	Input Hp (max) (C)	–	–	–	4.85	2.46	1.63	9.86	5.01	3.32	20.42	10.36	6.87	27.34	13.88	9.19	33.57	23.75	15.69	33.57	23.75	15.69
8.03	Output torque, in-lb	–	–	–	710	711	710	1446	1447	1446	2994	2995	2994	4008	4011	4008	4922	6865	6843	4922	6865	6843
	OHL input shaft	–	–	–	(A)	346	360	(A)	453	471	(A)	711	740	(A)	840	876	(A)	948	995	(A)	948	995
	OHL output shaft (B)	–	–	–	(A)	4512	4512	(A)	4512	4512	(A)	4512	4512	(A)	4512	4512	(A)	4512	4512	(A)	4512	4213
	Output RPM	–	–	–	367	186	123	367	186	123	367	186	123	367	186	123	367	186	123	367	186	123
	Input Hp (max) (C)	–	–	–	4.85	2.46	1.63	9.86	5.01	3.32	20.42	10.36	6.87	27.34	13.88	14.10	30.16	22.21	9.19	30.16	22.21	14.10
9.41	Output torque, in-lb	–	–	–	833	833	833	1695	1696	1695	3509	3511	3509	4699	4701	4698	5184	7526	7207	5184	7526	7207
	OHL input shaft	–	–	–	(A)	346	360	(A)	454	472	(A)	707	739	(A)	836	876	(A)	951	995	(A)	951	995
	OHL output shaft (B)	–	–	–	4505	4512	4512	4505	4512	4512	4505	4512	4512	4505	4512	4512	4505	4512	4512	4505	4512	4512
	Output RPM	–	–	–	–	–	–	–	–	–	296	150	100	296	150	100	296	150	100	296	150	100
	Input Hp (max) (C)	–	–	–	–	–	–	–	–	–	20.42	10.36	6.87	27.34	13.88	9.19	35.95	26.93	16.81	35.95	26.93	16.81
11.64	Output torque, in-lb	–	–	–	–	–	–	–	–	–	4342	4344	4342	5814	5817	5814	7645	11290	10630	7645	11290	10630
	OHL input shaft	–	–	–	–	–	–	–	–	–	(A)	713	742	(A)	843	877	(A)	947	994	(A)	947	994
	OHL output shaft (B)	–	–	–	–	–	–	–	–	–	4505	4512	4512	4505	4512	4512	4505	4512	4512	4505	4512	4512
	Output RPM	–	–	–	–	–	–	–	–	–	246	125	83	246	125	83	246	125	83	246	125	83
	Input Hp (max) (C)	–	–	–	–	–	–	–	–	–	20.42	10.36	6.87	27.34	13.88	9.19	31.53	24.90	17..74	31.53	24.90	14.74
14.04	Output torque, in-lb	–	–	–	–	–	–	–	–	–	5238	5241	5238	7014	7018	7014	8089	12592	11246	8089	12592	11246
	OHL input shaft	–	–	–	–	–	–	–	–	–	(A)	713	742	(A)	843	877	(A)	948	994	(A)	948	994
	OHL output shaft (B)	–	–	–	–	–	–	–	–	–	4512	4512	4512	4512	4512	4512	4512	4512	4512	4512	4512	4512
	Output RPM	–	–	–	205	104	69	205	104	69	205	104	69	205	104	69	205	104	69	205	104	69
	Input Hp (max) (C)	–	–	–	4.85	2.46	1.63	9.86	5.01	3.32	20.42	10.36	6.87	27.34	13.88	9.19	27.75	21.91	12.97	27.75	21.91	12.97
16.85	Output torque, in-lb	–	–	–	1492	1492	1492	3036	3038	3036	6286	6290	6286	8417	8422	8417	8544	13299	11879	8544	13299	11879
	OHL input shaft	–	–	–	(A)	346	360	(A)	453	471	(A)	711	740	(A)	840	876	(A)	951	995	(A)	951	995
	OHL output shaft (B)	–	–	–	4512	4512	4512	4512	4512	4512	4512	4512	4512	4512	4512	4512	4512	4512	4512	4512	4512	4512
	Output RPM	–	–	–	175	89	59	175	89	59	175	89	59	175	89	59	175	89	59	175	89	59
	Input Hp (max) (C)	–	–	–	4.85	2.46	1.63	9.86	5.01	3.32	20.42	10.36	6.87	24.83	13.88	8.26	24.83	19.60	11.61	24.83	19.60	11.61
19.75	Output torque, in-lb	–	–	–	1748	1749	1748	3559	3561	3559	7368	7373	7368	8960	9872	9.19	8960	13947	12458	8960	13947	12458
	OHL input shaft	–	–	–	(A)	346	360	(A)	454	472	(A)	707	739	(A)	836	9866	(A)	953	996	(A)	953	996
	OHL output shaft (B)	–	–	–	4512	4512	4512	4512	4512	4512	4512	4512	4512	4512	4512	4512	4512	4512	4512	4512	4512	4512
	Output RPM	–	–	–	147	74	49	147	74	49	147	74	49	147	74	49	147	74	49	147	74	49
	Input Hp (max) (C)	–	–	–	4.85	2.46	1.63	9.86	5.01	3.32	20.42	10.36	6.87	21.96	13.75	9.19	21.96	17.23	10.27	21.96	17.23	10.27
23.54	Output torque, in-lb	–	–	–	2084	2085	2084	4242	4244	4242	8782	8787	8782	9444	11656	11758	9444	14612	13131	9444	14612	13131
	OHL input shaft	–	–	–	(A)	346	360	(A)	456	474	(A)	708	738	(A)	838	853	(A)	955	996	(A)	955	996
	OHL output shaft (B)	–	–	–	4512	4512	4512	4512	4512	4512	4512	4512	4512	4512	4512	4512	4512	4512	4512	4512	4512	4512
	Output RPM	135	69	45	135	69	45	135	69	45	135	69	45	135	69	45	135	69	45	135	69	45
	Input Hp (max) (C)	3.98	2.02	1.34	4.85	2.46	1.63	9.86	5.01	3.32	20.42	10.36	6.87	20.75	13.25	8.95	20.75	15.89	9.70	20.75	15.89	9.70
25.53	Output torque, in-lb	1856	1857	1856	2260	2261	2260	4601	4603	4601	9524	9530	9524	9677	12185	12411	9677	14612	13455	9677	14612	13455
	OHL input shaft	(A)	218	225	(A)	346	360	(A)	456	475	(A)	712	738	(A)	828	819	(A)	956	997	(A)	956	997
	OHL output shaft (B)	4512	4512	4512	4512	4512	4512	4512	4512	4512	4512	4512	4512	4512	4512	4512	4512	4512	4512	4512	4512	4512
	Output RPM	121	61	41	121	61	41	121	61	41	121	69	41	121	61	41	121	61	41	–	–	–
	Input Hp (max) (C)	3.98	2.02	1.34	4.85	2.46	1.63	9.86	5.01	3.32	19.21	9.95	6.85	19.21	12.58	8.49	19.21	14.24	8.98	–	–	–
28.50	Output torque, in-lb	2072	2073	2072	2523	2524	2523	5135	5138	5135	10003	10212	13152	10003	12912	13152	10003	14612	13907	–	–	–
	OHL input shaft	(A)	218	226	(A)	346	360	(A)	456	475	(A)	695	738	(A)	773	770	(A)	957	997	–	–	–
	OHL output shaft (B)	4512	4512	4512	4512	4512	4512	4512	4512	4512	4512	4512	4512	4512	4512	4512	4512	4512	4512	–	–	–

Service factor: 1.0

(A) (B) (C) - See footnotes page on inside back cover

Blank areas (-) indicate configuration not available

RHB 88

Size: B_883

Triple reduction – Clamp collar, three-piece coupled, separate

NEMA motor frame		56C			—			140TC			180TC			—			210TC			250TC		
IEC motor frame		71D			80D			90D			100D			112D			132D			-		
Separate group		71			80			90			100			112			132			-		
Ratio	Output Rating data	3450	1750	1160	3450	1750	1160	3450	1750	1160	3450	1750	1160	3450	1750	1160	3450	1750	1160	3450	1750	1160
	Output RPM	112	57	38	112	57	38	112	57	38	112	57	38	112	57	38	112	57	38	–	–	–
	Input Hp (max) (C)	3.98	2.02	1.34	4.85	2.46	1.63	9.86	5.01	3.32	18.16	9.57	6.59	18.16	12.10	6.59	18.16	13.14	8.49	–	–	–
30.87	Output torque, in-lb	2244	2246	2244	2732	2734	2732	5562	5565	5562	10243	10635	11047	10243	13452	13702	10243	14612	14241	–	–	–
	OHL input shaft	(A)	217	226	(A)	346	360	(A)	455	475	(A)	660	737	(A)	729	733	(A)	958	997	–	–	–
	OHL output shaft (B)	4512	4512	4512	4512	4512	4512	4512	4512	4512	4512	4512	4512	4512	4512	4512	4512	4512	4512	–	–	–
	Output RPM	–	–	–	–	–	–	–	–	–	100	51	34	100	51	34	100	51	34	–	–	–
	Input Hp (max) (C)	–	–	–	–	–	–	–	–	–	18.13	10.36	6.87	18.13	11.80	7.81	18.13	11.80	7.81	–	–	–
34.40	Output torque, in-lb	–	–	–	–	–	–	–	–	–	11393	12837	12830	11393	14612	14604	11393	14612	14604	–	–	–
	OHL input shaft	–	–	–	–	–	–	–	–	–	(A)	713	742	(A)	840	874	(A)	958	997	–	–	–
	OHL output shaft (B)	–	–	–	–	–	–	–	–	–	4512	4512	4512	4512	4512	4512	4512	4512	4512	–	–	–
	Output RPM	–	–	–	–	–	–	–	–	–	83	42	28	83	42	28	83	42	28	–	–	–
	Input Hp (max) (C)	–	–	–	–	–	–	–	–	–	15.90	9.78	6.48	15.90	9.78	6.48	15.90	9.78	6.48	–	–	–
41.50	Output torque, in-lb	–	–	–	–	–	–	–	–	–	12055	14612	14604	12055	14612	14604	12055	14612	14604	–	–	–
	OHL input shaft	–	–	–	–	–	–	–	–	–	(A)	713	742	(A)	839	874	(A)	958	997	–	–	–
	OHL output shaft (B)	–	–	–	–	–	–	–	–	–	4512	4512	4512	4512	4512	4512	4512	4512	4512	–	–	–
	Output RPM	–	–	–	69	35	23	69	35	23	69	35	23	69	35	23	69	35	23	–	–	–
	Input Hp (max) (C)	–	–	–	4.85	2.46	1.63	9.86	5.01	3.32	13.99	8.15	5.40	13.99	8.15	5.54	13.99	8.15	5.40	–	–	–
49.80	Output torque, in-lb	–	–	–	4407	4410	4407	8972	8977	8972	12730	14612	14604	12730	14612	14604	12730	14612	14604	–	–	–
	OHL input shaft	–	–	–	(A)	346	360	(A)	453	471	(A)	708	737	(A)	842	876	(A)	959	998	–	–	–
	OHL output shaft (B)	–	–	–	4512	4512	4512	4512	4512	4512	4512	4512	4512	4512	4512	4512	4512	4512	4512	–	–	–
	Output RPM	–	–	–	59	30	20	59	30	20	59	30	20	59	30	20	59	30	20	–	–	–
	Input Hp (max) (C)	–	–	–	4.85	2.46	1.63	9.86	5.01	3.32	12.52	6.95	4.60	12.52	6.95	4.60	12.52	6.95	4.60	–	–	–
58.37	Output torque, in-lb	–	–	–	5166	5169	5156	10517	10523	10517	13353	14612	14604	13353	14612	14604	13353	14612	14604	–	–	–
	OHL input shaft	–	–	–	(A)	346	360	(A)	454	472	(A)	707	737	(A)	844	878	(A)	959	998	–	–	–
	OHL output shaft (B)	–	–	–	4512	4512	4512	4512	4512	4512	4512	4512	4512	4512	4512	4512	4512	4512	4512	–	–	–
	Output RPM	–	–	–	50	25	17	50	25	17	50	25	17	50	25	17	50	25	17	–	–	–
	Input Hp (max) (C)	–	–	–	4.85	2.46	1.63	9.86	5.01	3.32	11.08	5.83	3.86	11.08	5.83	3.86	11.08	5.83	3.86	–	–	–
69.57	Output torque, in-lb	–	–	–	6157	6161	6157	12535	12542	12535	14076	14612	14604	14076	14612	14604	14076	14612	14604	–	–	–
	OHL input shaft	–	–	–	(A)	346	360	(A)	456	474	(A)	711	740	(A)	844	879	(A)	(A)	998	–	–	–
	OHL output shaft (B)	–	–	–	4512	4512	4512	4512	4512	4512	4512	4512	4512	4512	4512	4512	4512	4512	4512	–	–	–
	Output RPM	46	23	15	46	23	15	46	23	15	46	23	15	46	23	15	46	23	15	–	–	–
	Input Hp (max) (C)	3.98	2.02	1.34	4.85	2.46	1.63	9.86	5.01	3.32	10.46	5.38	3.56	10.46	5.38	3.56	10.46	5.38	3.56	–	–	–
75.45	Output torque, in-lb	5484	5489	5485	6678	6682	6678	13594	13602	13594	14423	14612	14604	14423	14612	14604	14423	14612	14604	–	–	–
	OHL input shaft	(A)	218	225	(A)	346	360	(A)	456	475	(A)	712	741	(A)	845	879	(A)	(A)	998	–	–	–
	OHL output shaft (B)	4512	4512	4512	4512	4512	4512	4512	4512	4512	4512	4512	4512	4512	4512	4512	4512	4512	4512	–	–	–
	Output RPM	41	21	14	41	21	14	41	21	14	41	21	14	41	21	14	41	21	14	–	–	–
	Input Hp (max) (C)	3.98	2.02	1.34	4.85	2.46	1.63	9.49	4.82	3.09	9.49	4.82	3.19	9.49	4.82	3.19	9.49	4.82	3.19	–	–	–
84.21	Output torque, in-lb	6123	6126	6123	7454	7458	7454	14604	14612	14604	14604	14612	14604	14604	14612	14604	14604	14612	14604	–	–	–
	OHL input shaft	(A)	218	226	(A)	346	360	(A)	456	475	(A)	713	742	(A)	845	879	(A)	(A)	989	–	–	–
	OHL output shaft (B)	4512	4512	4512	4512	4512	4512	4512	4512	4512	4512	4512	4512	4512	4512	4512	4512	4512	4512	–	–	–
	Output RPM	38	19	13	38	19	13	38	19	13	38	19	13	38	19	13	38	19	13	–	–	–
	Input Hp (max) (C)	3.98	2.02	1.34	4.85	2.46	1.63	8.76	4.45	2.95	8.76	4.45	2.95	8.76	4.45	2.95	8.76	4.45	2.95	–	–	–
91.22	Output torque, in-lb	6632	6636	6632	8073	8078	8073	14604	14612	14604	14604	14612	14604	14604	14612	14604	14604	14612	14604	–	–	–
	OHL input shaft	(A)	217	226	(A)	346	360	(A)	456	475	(A)	713	742	(A)	845	879	(A)	(A)	990	–	–	–
	OHL output shaft (B)	4512	4512	4512	4512	4512	4512	4512	4512	4512	4512	4512	4512	4512	4512	4512	4512	4512	4512	–	–	–
	Output RPM	33	17	11	33	17	11	33	17	11	33	17	11	33	17	11	33	17	11	–	–	–
	Input Hp (max) (C)	3.98	2.02	1.34	4.85	2.46	1.63	7.73	3.92	2.60	7.73	3.92	2.60	7.73	3.92	2.60	7.73	3.92	2.60	–	–	–
103.38	Output torque, in-lb	7516	7521	7516	9150	9156	9150	14604	14612	14604	14604	14612	14604	14604	14612	14604	14604	14612	14604	–	–	–
	OHL input shaft	(A)	219	228	(A)	346	360	(A)	452	471	(A)	714	743	(A)	(A)	879	(A)	(A)	993	–	–	–
	OHL output shaft (B)	4512	4512	4512	4512	4512	4512	4512	4512	4512	4512	4512	4512	4512	4512	4512	4512	4512	4512	–	–	–
	Output RPM	31	16	10	31	16	10	31	16	10	31	16	10	31	16	10	31	16	10	–	–	–
	Input Hp (max) (C)	3.98	2.02	1.34	4.85	2.46	1.63	7.18	3.64	2.41	7.08	3.64	2.41	7.18	3.64	2.41	7.18	3.64	2.41	–	–	–
111.37	Output torque, in-lb	7904	8102	8097	9857	9863	9857	14604	14612	14604	14604	14612	14604	14604	14612	14604	14604	14612	14604	–	–	–
	OHL input shaft	(A)	218	227	(A)	346	360	(A)	453	472	(A)	714	743	(A)	(A)	879	(A)	(A)	993	–	–	–
	OHL output shaft (B)	4512	4512	4512	4512	4512	4512	4512	4512	4512	4512	4512	4512	4512	4512	4512	4512	4512	4512	–	–	–

Service factor: 1.0

(A) (B) (C) - See footnotes page on inside back cover

Blank areas (-) indicate configuration not available

RHB 88

Size: B_883

Triple reduction – Clamp collar, three-piece coupled, separate

NEMA motor frame		56C			—			140TC			180TC			—			210TC			250TC		
IEC motor frame		71D			80D			90D			100D			112D			132D			-		
Separate group		71			80			90			100			112			132			-		
Ratio	Output Rating data	3450	1750	1160	3450	1750	1160	3450	1750	1160	3450	1750	1160	3450	1750	1160	3450	1750	1160	3450	1750	1160
	Output RPM	29	**15**	10	29	**15**	10	29	**15**	10	29	**15**	10	29	**15**	10	29	**15**	10	–	–	–
	Input Hp (max) **(C)**	3.98	**2.02**	1.34	4.85	**2.46**	1.63	6.64	**3.37**	2.23	6.64	**3.37**	2.23	6.64	**3.37**	2.23	6.64	**3.37**	2.23	–	–	–
120.42	Output torque, in-lb	8044	**8760**	8755	10658	**10665**	10658	14604	**14612**	14604	14604	**14612**	14604	14604	**14612**	14604	14604	**14612**	14604	–	–	–
	OHL input shaft	**(A)**	**218**	227	**(A)**	**346**	360	**(A)**	**454**	471	**(A)**	**714**	743	**(A)**	**(A)**	879	**(A)**	**(A)**	994	–	–	–
	OHL output shaft **(B)**	4512	**4512**	4512	4512	**4512**	4512	4512	**4512**	4512	4512	**4512**	4512	4512	**4512**	4512	4512	**4512**	4512	–	–	–
	Output RPM	26	**13**	9	26	**13**	9	26	**13**	9	26	**13**	9	26	**13**	9	26	**13**	9	–	–	–
	Input Hp (max) **(C)**	3.98	**2.02**	1.34	4.85	**2.46**	1.63	6.11	**3.10**	2.06	6.11	**3.10**	2.06	6.11	**3.10**	2.06	6.11	**3.10**	2.06	–	–	–
130.77	Output torque, in-lb	8187	**9513**	9087	11574	**11581**	11574	14604	**14612**	14604	14604	**14612**	14604	14604	**14612**	14604	14604	**14612**	14604	–	–	–
	OHL input shaft	**(A)**	**218**	226	**(A)**	**345**	359	**(A)**	**454**	472	**(A)**	**714**	743	**(A)**	**(A)**	879	**(A)**	**(A)**	995	–	–	–
	OHL output shaft **(B)**	4512	**4512**	4512	4512	**4512**	4512	4512	**4512**	4512	4512	**4512**	4512	4512	**4512**	4512	4512	**4512**	4512	–	–	–
	Output RPM	24	**12**	8	24	**12**	8	24	**12**	8	24	**12**	8	24	**12**	8	24	**12**	8	–	–	–
	Input Hp (max) **(C)**	3.98	**2.01**	1.34	4.85	**2.46**	1.63	5.53	**2.81**	1.86	5.53	**2.81**	1.86	5.53	**2.81**	1.86	5.53	**2.81**	1.86	–	–	–
144.58	Output torque, in-lb	8349	**10445**	10511	12797	**12804**	12797	14604	**14612**	14604	14604	**14612**	14604	14604	**14612**	14604	14604	**14612**	14604	–	–	–
	OHL input shaft	**(A)**	**217**	227	**(A)**	**345**	359	**(A)**	**454**	473	**(A)**	**714**	744	**(A)**	**(A)**	872	**(A)**	**(A)**	996	–	–	–
	OHL output shaft **(B)**	4512	**4512**	4512	4512	**4512**	4512	4512	**4512**	4512	4512	**4512**	4512	4512	**4512**	4512	4512	**4512**	4512	–	–	–
	Output RPM	22	**11**	7	22	**11**	7	22	**11**	7	22	**11**	7	22	**11**	7	22	**11**	7	–	–	–
	Input Hp (max) **(C)**	3.98	**1.88**	1.34	4.85	**2.46**	1.63	5.10	**2.59**	1.72	5.10	**2.59**	1.72	5.10	**2.59**	1.72	5.10	**2.59**	1.72	–	–	–
156.63	Output torque, in-lb	8472	**10610**	11387	13863	**13871**	13863	14604	**14612**	14604	14604	**14612**	14604	14604	**14612**	14604	14604	**14612**	14604	–	–	–
	OHL input shaft	**(A)**	**218**	227	**(A)**	**345**	359	**(A)**	**455**	474	**(A)**	**715**	744	**(A)**	**(A)**	874	**(A)**	**(A)**	996	–	–	–
	OHL output shaft **(B)**	4512	**4512**	4512	4512	**4512**	4512	4512	**4512**	4512	4512	**4512**	4512	4512	**4512**	4512	4512	**4512**	4512	–	–	–
	Output RPM	20	**10**	7	20	**10**	7	20	**10**	7	20	**10**	7	20	**10**	7	–	–	–	–	–	–
	Input Hp (max) **(C)**	3.98	**1.70**	1.34	4.53	**2.30**	1.52	4.53	**2.30**	1.52	4.53	**2.30**	1.52	4.53	**2.30**	1.52	–	–	–	–	–	–
176.50	Output torque, in-lb	8648	**10834**	12832	14604	**14612**	14604	14604	**14612**	14604	14604	**14612**	14604	14604	**14612**	14604	–	–	–	–	–	–
	OHL input shaft	**(A)**	**218**	226	**(A)**	**345**	359	**(A)**	**456**	474	**(A)**	**714**	744	**(A)**	**(A)**	(A)	–	–	–	–	–	–
	OHL output shaft **(B)**	4512	**4512**	4512	4512	**4512**	4512	4512	**4512**	4512	4512	**4512**	4512	4512	**4512**	4512	–	–	–	–	–	–
	Output RPM	18	**9**	6	18	**9**	6	18	**9**	6	18	**9**	6	18	**9**	6	–	–	–	–	–	–
	Input Hp (max) **(C)**	3.23	**1.58**	1.33	3.23	**2.10**	1.39	3.23	**2.10**	1.39	3.23	**2.10**	1.39	3.23	**2.10**	1.39	–	–	–	–	–	–
193.24	Output torque, in-lb	8766	**10992**	13942	11393	**14612**	14604	11392	**14612**	14604	11393	**14612**	14604	11393	**14612**	14604	–	–	–	–	–	–
	OHL input shaft	**(A)**	**218**	226	**(A)**	**345**	359	**(A)**	**456**	475	**(A)**	**714**	744	**(A)**	**(A)**	**(A)**	–	–	–	–	–	–
	OHL output shaft **(B)**	4512	**4512**	4512	4512	**4512**	4512	4512	**4512**	4512	**4512**	**4512**	4512	4512	**4512**	4512	–	–	–	–	–	–
	Output RPM	16	**8**	5	16	**8**	5	16	**8**	5	16	**8**	5	–	–	–	–	–	–	–	–	–
	Input Hp (max) **(C)**	3.71	**1.44**	1.25	3.71	**1.88**	1.25	3.71	**1.88**	1.25	3.71	**1.88**	1.25	–	–	–	–	–	–	–	–	–
215.25	Output torque, in-lb	8901	**11169**	14584	14604	**14612**	14604	14604	**14612**	14604	14604	**14612**	14604	–	–	–	–	–	–	–	–	–
	OHL input shaft	**(A)**	**218**	228	**(A)**	**345**	359	**(A)**	**456**	475	**(A)**	**714**	744	–	–	–	–	–	–	–	–	–
	OHL output shaft **(B)**	4512	**4512**	4512	4512	**4512**	4512	4512	**4512**	4512	4512	**4512**	4512	–	–	–	–	–	–	–	–	–
	Output RPM	14	**7**	5	14	**7**	5	14	**7**	5	–	–	–	–	–	–	–	–	–	–	–	–
	Input Hp (max) **(C)**	3.25	**1.28**	1.09	3.25	**1.65**	1.09	3.25	**1.65**	1.09	–	–	–	–	–	–	–	–	–	–	–	–
246.13	Output torque, in-lb	9053	**11368**	14604	14604	**14612**	14604	14604	**14612**	14604	–	–	–	–	–	–	–	–	–	–	–	–
	OHL input shaft	**(A)**	**218**	228	**(A)**	**346**	360	**(A)**	**457**	475	–	–	–	–	–	–	–	–	–	–	–	–
	OHL output shaft **(B)**	4512	**4512**	4512	4512	**4512**	4512	4512	**4512**	4512	–	–	–	–	–	–	–	–	–	–	–	–
	Output RPM	13	**6**	4	13	**6**	4	13	**6**	4	–	–	–	–	–	–	–	–	–	–	–	–
	Input Hp (max) **(C)**	2.93	**1.17**	0.98	2.93	**1.49**	0.98	2.93	**1.49**	0.98	–	–	–	–	–	–	–	–	–	–	–	–
272.95	Output torque, in-lb	9160	**11508**	14604	14604	**14612**	14604	14604	**14612**	14604	–	–	–	–	–	–	–	–	–	–	–	–
	OHL input shaft	**(A)**	**219**	227	**(A)**	**346**	360	**(A)**	**457**	475	–	–	–	–	–	–	–	–	–	–	–	–
	OHL output shaft **(B)**	4512	**4512**	4512	4512	**4512**	4512	4512	**4512**	4512	–	–	–	–	–	–	–	–	–	–	–	–
	Output RPM	11	**6**	4	11	**6**	4	11	**6**	4	–	–	–	–	–	–	–	–	–	–	–	–
	Input Hp (max) **(C)**	2.64	**1.07**	0.89	2.64	**1.34**	0.89	2.64	**1.34**	0.89	–	–	–	–	–	–	–	–	–	–	–	–
302.68	Output torque, in-lb	9255	**11638**	14604	11993	**14612**	13268	11993	**14612**	13268	–	–	–	–	–	–	–	–	–	–	–	–
	OHL input shaft	**(A)**	**219**	228	**(A)**	**346**	360	**(A)**	**457**	475	–	–	–	–	–	–	–	–	–	–	–	–
	OHL output shaft **(B)**	4512	**4512**	4512	4512	**4512**	4512	4512	**4512**	4512	–	–	–	–	–	–	–	–	–	–	–	–

Service factor: 1.0

(A) (B) (C) - See footnotes page on inside back cover

Blank areas (-) indicate configuration not available

RHB 88

Size: B_884

Four-stage reduction – Clamp collar, three-piece coupled, separate

NEMA motor frame		56C			—			140TC			180TC		
IEC motor frame		71D			80D			90D			100D		
Separate group		71			80			90			100		
Ratio	Output Rating data	3450	1750	1160	3450	1750	1160	3450	1750	1160	3450	1750	1160
	Output RPM	10.57	**5.36**	3.55	10.57	**5.36**	3.55	10.57	**5.36**	3.55	10.57	**5.36**	3.55
	Input Hp (max) **(C)**	2.45	**1.24**	0.82	2.45	**1.24**	0.82	2.45	**1.24**	0.82	2.45	**1.24**	0.82
326.53	Output torque, in-lb	14612	**14612**	14612	14612	**14612**	14612	14612	**14612**	14612	14612	**14612**	14612
	OHL input shaft	**(A)**	**(A)**	(A)	**(A)**	**(A)**	(A)	**(A)**	**(A)**	(A)	**(A)**	**(A)**	(A)
	OHL output shaft **(B)**	**4512**	**4512**	4512	**4512**	**4512**	4512	**4512**	**4512**	4512	**4512**	**4512**	4512
	Output RPM	9.53	**4.84**	3.21	9.53	**4.84**	3.21	9.53	**4.84**	3.21	9.53	**4.84**	3.21
	Input Hp (max) **(C)**	2.21	**1.12**	0.74	2.21	**1.12**	0.74	2.21	**1.12**	0.74	2.21	**1.12**	0.74
361.83	Output torque, in-lb	14612	**14612**	14612	14612	**14612**	14612	14612	**14612**	14612	14612	**14612**	14612
	OHL input shaft	**(A)**	**(A)**	(A)	**(A)**	**(A)**	(A)	**(A)**	**(A)**	(A)	**(A)**	**(A)**	(A)
	OHL output shaft **(B)**	**4512**	**4512**	4512	**4512**	**4512**	4512	**4512**	**4512**	4512	**4512**	**4512**	4512
	Output RPM	7.97	**4.04**	2.68	7.97	**4.04**	2.68	7.97	**4.04**	2.68	7.97	**4.04**	2.68
	Input Hp (max) **(C)**	1.85	**0.94**	0.62	1.85	**0.94**	0.62	1.85	**0.94**	0.62	1.85	**0.94**	0.62
432.86	Output torque, in-lb	14612	**14612**	14612	14612	**14612**	14612	14612	**14612**	14612	14612	**14612**	14612
	OHL input shaft	**(A)**	**(A)**	(A)	**(A)**	**(A)**	(A)	**(A)**	**(A)**	(A)	**(A)**	**(A)**	(A)
	OHL output shaft **(B)**	**4512**	**4512**	4512	**4512**	**4512**	4512	**4512**	**4512**	4512	**4512**	**4512**	4512
	Output RPM	7.16	**3.63**	2.41	7.16	**3.63**	2.41	7.16	**3.63**	2.41	7.16	**3.63**	2.41
	Input Hp (max) **(C)**	1.66	**0.84**	0.56	1.66	**0.84**	0.56	1.66	**0.84**	0.56	1.66	**0.84**	0.56
481.85	Output torque, in-lb	14612	**14612**	14612	14612	**14612**	14612	14612	**14612**	14612	14612	**14612**	14612
	OHL input shaft	**(A)**	**(A)**	(A)	**(A)**	**(A)**	(A)	**(A)**	**(A)**	(A)	**(A)**	**(A)**	(A)
	OHL output shaft **(B)**	**4512**	**4512**	4512	**4512**	**4512**	4512	**4512**	**4512**	4512	**4512**	**4512**	4512
	Output RPM	6.41	**3.25**	2.16	6.41	**3.25**	2.16	6.41	**3.25**	2.16	6.41	**3.25**	2.16
	Input Hp (max) **(C)**	1.49	**0.75**	0.50	1.49	**0.75**	0.50	1.49	**0.75**	0.50	1.49	**0.75**	0.50
538.13	Output torque, in-lb	14612	**14612**	14612	14612	**14612**	14612	14612	**14612**	14612	14612	**14612**	14612
	OHL input shaft	**(A)**	**(A)**	(A)	**(A)**	**(A)**	(A)	**(A)**	**(A)**	(A)	**(A)**	**(A)**	(A)
	OHL output shaft **(B)**	**4512**	**4512**	4512	**4512**	**4512**	4512	**4512**	**4512**	4512	**4512**	**4512**	4512
	Output RPM	5.61	**2.84**	1.89	5.61	**2.84**	1.89	5.61	**2.84**	1.89	5.61	**2.84**	1.89
	Input Hp (max) **(C)**	1.30	**0.66**	0.44	1.30	**0.66**	0.44	1.30	**0.66**	0.44	1.30	**0.66**	0.44
615.33	Output torque, in-lb	14612	**14612**	14612	14612	**14612**	14612	14612	**14612**	14612	14612	**14612**	14612
	OHL input shaft	**(A)**	**(A)**	(A)	**(A)**	**(A)**	(A)	**(A)**	**(A)**	(A)	**(A)**	**(A)**	(A)
	OHL output shaft **(B)**	**4512**	**4512**	4512	**4512**	**4512**	4512	**4512**	**4512**	4512	**4512**	**4512**	4512
	Output RPM	4.86	**2.47**	1.64	4.86	**2.47**	1.64	4.86	**2.47**	1.64	4.86	**2.47**	1.64
	Input Hp (max) **(C)**	1.13	**0.57**	0.38	1.13	**0.57**	0.38	1.13	**0.57**	0.38	1.13	**0.57**	0.38
709.19	Output torque, in-lb	14612	**14612**	14612	14612	**14612**	14612	14612	**14612**	14612	14612	**14612**	14612
	OHL input shaft	**(A)**	**(A)**	(A)	**(A)**	**(A)**	(A)	**(A)**	**(A)**	(A)	**(A)**	**(A)**	(A)
	OHL output shaft **(B)**	**4512**	**4512**	4512	**4512**	**4512**	4512	**4512**	**4512**	4512	**4512**	**4512**	4512
	Output RPM	4.37	**2.22**	1.47	4.37	**2.22**	1.47	4.37	**2.22**	1.47	4.37	**2.22**	1.47
	Input Hp (max) **(C)**	1.01	**0.51**	0.34	1.01	**0.51**	0.34	1.01	**0.51**	0.34	1.01	**0.51**	0.34
789.97	Output torque, in-lb	14612	**14612**	14612	14612	**14612**	14612	14612	**14612**	14612	14612	**14612**	14612
	OHL input shaft	**(A)**	**(A)**	(A)	**(A)**	**(A)**	(A)	**(A)**	**(A)**	(A)	**(A)**	**(A)**	(A)
	OHL output shaft **(B)**	**4512**	**4512**	4512	**4512**	**4512**	4512	**4512**	**4512**	4512	**4512**	**4512**	4512
	Output RPM	3.82	**1.94**	1.28	3.82	**1.94**	1.28	3.82	**1.94**	1.28	3.82	**1.94**	1.28
	Input Hp (max) **(C)**	0.89	**0.45**	0.30	0.89	**0.45**	0.30	0.89	**0.45**	0.30	0.89	**0.45**	0.30
903.46	Output torque, in-lb	14612	**14612**	14612	14612	**14612**	14612	14612	**14612**	14612	14612	**14612**	14612
	OHL input shaft	(A)	**(A)**	(A)	**(A)**	**(A)**	(A)	**(A)**	**(A)**	(A)	**(A)**	**(A)**	(A)
	OHL output shaft **(B)**	**4512**	**4512**	4512	**4512**	**4512**	4512	**4512**	**4512**	4512	**4512**	**4512**	4512
	Output RPM	3.30	**1.67**	1.11	3.30	**1.67**	1.11	3.30	**1.67**	1.11	–	**–**	–
	Input Hp (max) **(C)**	0.77	**0.39**	0.26	0.77	**0.39**	0.26	0.77	**0.39**	0.26	–	**–**	–
1044.88	Output torque, in-lb	14612	**14612**	14612	14612	**14612**	14612	14612	**14612**	14612	–	**–**	–
	OHL input shaft	**(A)**	**(A)**	(A)	**(A)**	**(A)**	(A)	**(A)**	**(A)**	(A)	**–**	**–**	–
	OHL output shaft **(B)**	4512	**4512**	4512	4512	**4512**	4512	4512	**4512**	4512	–	**–**	–
	Output RPM	2.90	**1.47**	0.98	2.90	**1.47**	0.98	2.90	**1.47**	0.98	–	**–**	–
	Input Hp (max) **(C)**	0.67	**0.34**	0.23	0.67	**0.34**	0.23	0.67	**0.34**	0.23	–	**–**	–
1187.85	Output torque, in-lb	14612	**14612**	14612	14612	**14612**	14612	14612	**14612**	14612	–	**–**	–
	OHL input shaft	**(A)**	**(A)**	(A)	**(A)**	**(A)**	(A)	**(A)**	**(A)**	(A)	**–**	**–**	–
	OHL output shaft **(B)**	4512	**4512**	4512	4512	**4512**	4512	4512	**4512**	4512	–	**–**	–

Service factor: 1.0

(A) (B) (C) - See footnotes page on inside back cover

Blank areas (-) indicate configuration not available

RHB 88

Size: B_884

Four-stage reduction – Clamp collar, three-piece coupled, separate

NEMA motor frame		56C			—			140TC			180TC		
IEC motor frame		71D			80D			90D			100D		
Separate group		71			80			90			100		
Ratio	Output Rating data	3450	1750	1160	3450	1750	1160	3450	1750	1160	3450	1750	1160
	Output RPM	2.56	**1.30**	0.86	2.56	**1.30**	0.86	–	–	–	–	–	–
	Input Hp (max) **(C)**	0.59	**0.30**	0.20	0.59	**0.30**	0.20	–	–	–	–	–	–
1348.93	Output torque, in-lb	14612	**14612**	14612	14612	**14612**	14612	–	–	–	–	–	–
	OHL input shaft	(A)	**(A)**	(A)	(A)	**(A)**	(A)	–	–	–	–	–	–
	OHL output shaft **(B)**	4512	**4512**	4512	4512	**4512**	4512	–	–	–	–	–	–
	Output RPM	2.23	**1.13**	0.75	2.23	**1.13**	0.75	2.23	**1.13**	0.75	–	–	–
	Input Hp (max) **(C)**	0.52	**0.26**	0.17	0.52	**0.26**	0.17	0.52	**0.26**	0.17	–	–	–
1549.80	Output torque, in-lb	14612	**14612**	14612	14612	**14612**	14612	14612	**14612**	14612	–	–	–
	OHL input shaft	(A)	**(A)**	(A)	(A)	**(A)**	(A)	(A)	**(A)**	(A)	–	–	–
	OHL output shaft **(B)**	4512	**4512**	4512	4512	**4512**	4512	4512	**4512**	4512	–	–	–
	Output RPM	1.95	**0.99**	0.65	1.95	**0.99**	0.65	1.95	**0.99**	0.65	–	–	–
	Input Hp (max) **(C)**	0.45	**0.23**	0.15	0.45	**0.23**	0.15	0.45	**0.23**	0.15	–	–	–
1772.14	Output torque, in-lb	14612	**14612**	14612	14612	**14612**	14612	14612	**14612**	14612	–	–	–
	OHL input shaft	(A)	**(A)**	(A)	(A)	**(A)**	(A)	(A)	**(A)**	(A)	–	–	–
	OHL output shaft **(B)**	4512	**4512**	4512	4512	**4512**	4512	4512	**4512**	4512	–	–	–
	Output RPM	1.76	**0.89**	0.59	1.76	**0.89**	0.59	1.76	**0.89**	0.59	–	–	–
	Input Hp (max) **(C)**	0.41	**0.21**	0.14	0.41	**0.21**	0.14	0.41	**0.21**	0.14	–	–	–
1965.24	Output torque, in-lb	14612	**14612**	14612	14612	**14612**	14612	14612	**14612**	14612	–	–	–
	OHL input shaft	(A)	**(A)**	(A)	(A)	**(A)**	(A)	(A)	**(A)**	(A)	–	–	–
	OHL output shaft **(B)**	4512	**4512**	4512	4512	**4512**	4512	4512	**4512**	4512	–	–	–
	Output RPM	1.52	**0.77**	0.51	1.52	**0.77**	0.51	–	–	–	–	–	–
	Input Hp (max) **(C)**	0.35	**0.18**	0.12	0.35	**0.18**	0.12	–	–	–	–	–	–
2265.49	Output torque, in-lb	14612	**14612**	14612	14612	**14612**	14612	–	–	–	–	–	–
	OHL input shaft	(A)	**(A)**	(A)	(A)	**(A)**	(A)	–	–	–	–	–	–
	OHL output shaft **(B)**	4512	**4512**	4512	4512	**4512**	4512	–	–	–	–	–	–
	Output RPM	1.35	**0.69**	0.46	1.35	**0.69**	0.46	–	–	–	–	–	–
	Input Hp (max) **(C)**	0.31	**0.16**	0.11	0.31	**0.16**	0.11	–	–	–	–	–	–
2546.62	Output torque, in-lb	14612	**14612**	14612	14612	**14612**	14612	–	–	–	–	–	–
	OHL input shaft	(A)	**(A)**	(A)	(A)	**(A)**	(A)	–	–	–	–	–	–
	OHL output shaft **(B)**	4512	**4512**	4512	4512	**4512**	4512	–	–	–	–	–	–

Service factor: 1.0

(A) (B) (C) - See footnotes page on inside back cover

Blank areas (-) indicate configuration not available

RHB 88

Size: B_885

Five-stage reduction – Clamp collar, three-piece coupled, separate

NEMA motor frame		56C			—			140TC			180TC		
IEC motor frame		71D			80D			90D			100D		
Separate group		71			80			90			100		
Ratio	Output Rating data	3450	1750	1160	3450	1750	1160	3450	1750	1160	3450	1750	1160
	Output RPM	1.36	**0.69**	0.46	1.36	**0.69**	0.46	1.36	**0.69**	0.46	1.36	**0.69**	0.46
	Input Hp (max) **(C)**	0.31	**0.16**	0.11	0.31	**0.16**	0.11	0.31	**0.16**	0.11	0.31	**0.16**	0.11
2544.26	Output torque, in-lb	14612	**14612**	14612	14612	**14612**	14612	14612	**14612**	14612	14612	**14612**	14612
	OHL input shaft	**(A)**	**(A)**	(A)	**(A)**	**(A)**	(A)	**(A)**	**(A)**	(A)	**(A)**	**(A)**	(A)
	OHL output shaft **(B)**	**4512**	**4512**	4512	**4512**	**4512**	4512	**4512**	**4512**	4512	**4512**	**4512**	4512
	Output RPM	1.19	**0.60**	0.40	1.19	**0.60**	0.40	1.19	**0.60**	0.40	1.19	**0.60**	0.40
	Input Hp (max) **(C)**	0.27	**0.14**	0.09	0.27	**0.14**	0.09	0.27	**0.14**	0.09	0.27	**0.14**	0.09
2909.26	Output torque, in-lb	14612	**14612**	14612	14612	**14612**	14612	14612	**14612**	14612	14612	**14612**	14612
	OHL input shaft	**(A)**	**(A)**	(A)	**(A)**	**(A)**	(A)	**(A)**	**(A)**	(A)	**(A)**	**(A)**	(A)
	OHL output shaft **(B)**	**4512**	**4512**	4512	**4512**	**4512**	4512	**4512**	**4512**	4512	**4512**	**4512**	4512
	Output RPM	1.02	**0.52**	0.34	1.02	**0.52**	0.34	1.02	**0.52**	0.34	1.02	**0.52**	0.34
	Input Hp (max) **(C)**	0.24	**0.12**	0.08	0.24	**0.12**	0.08	0.24	**0.12**	0.08	0.24	**0.12**	0.08
3366.51	Output torque, in-lb	14612	**14612**	14612	14612	**14612**	14612	14612	**14612**	14612	14612	**14612**	14612
	OHL input shaft	**(A)**	**(A)**	(A)	**(A)**	**(A)**	(A)	**(A)**	**(A)**	(A)	**(A)**	**(A)**	(A)
	OHL output shaft **(B)**	**4512**	**4512**	4512	**4512**	**4512**	4512	**4512**	**4512**	4512	**4512**	**4512**	4512
	Output RPM	0.92	**0.47**	0.31	0.92	**0.47**	0.31	0.92	**0.47**	0.31	0.92	**0.47**	0.31
	Input Hp (max) **(C)**	0.21	**0.11**	0.07	0.21	**0.11**	0.07	0.21	**0.11**	0.07	0.21	**0.11**	0.07
3730.28	Output torque, in-lb	14612	**14612**	14612	14612	**14612**	14612	14612	**14612**	14612	14612	**14612**	14612
	OHL input shaft	**(A)**	**(A)**	(A)	**(A)**	**(A)**	(A)	**(A)**	**(A)**	(A)	**(A)**	**(A)**	(A)
	OHL output shaft **(B)**	**4512**	**4512**	4512	**4512**	**4512**	4512	**4512**	**4512**	4512	**4512**	**4512**	4512
	Output RPM	0.80	**0.40**	0.27	0.80	**0.40**	0.27	0.80	**0.40**	0.27	–	**–**	–
	Input Hp (max) **(C)**	0.18	**0.09**	0.06	0.18	**0.09**	0.06	0.18	**0.09**	0.06	–	**–**	–
4324.25	Output torque, in-lb	14612	**14612**	14612	14612	**14612**	14612	14612	**14612**	14612	–	**–**	–
	OHL input shaft	**(A)**	**(A)**	(A)	**(A)**	**(A)**	(A)	**(A)**	**(A)**	(A)	**–**	**–**	–
	OHL output shaft **(B)**	**4512**	**4512**	4512	**4512**	**4512**	4512	**4512**	**4512**	4512	**–**	**–**	–
	Output RPM	0.71	**0.36**	0.24	0.71	**0.36**	0.24	0.71	**0.36**	0.24	0.71	**0.36**	0.24
	Input Hp (max) **(C)**	0.17	**0.08**	0.06	0.17	**0.08**	0.06	0.17	**0.08**	0.06	0.17	**0.08**	0.06
4833.99	Output torque, in-lb	14612	**14612**	14612	14612	**14612**	14612	14612	**14612**	14612	14612	**14612**	14612
	OHL input shaft	**(A)**	**(A)**	(A)	**(A)**	**(A)**	(A)	**(A)**	**(A)**	(A)	**(A)**	**(A)**	(A)
	OHL output shaft **(B)**	**4512**	**4512**	4512	**4512**	**4512**	4512	**4512**	**4512**	4512	**4512**	**4512**	4512
	Output RPM	0.58	**0.30**	0.20	0.58	**0.30**	0.20	0.58	**0.30**	0.20	0.58	**0.30**	0.20
	Input Hp (max) **(C)**	0.14	**0.07**	0.05	0.14	**0.07**	0.05	0.14	**0.07**	0.05	0.14	**0.07**	0.05
5914.83	Output torque, in-lb	14612	**14612**	14612	14612	**14612**	14612	14612	**14612**	14612	14612	**14612**	14612
	OHL input shaft	**(A)**	**(A)**	(A)	**(A)**	**(A)**	(A)	**(A)**	**(A)**	(A)	**(A)**	**(A)**	(A)
	OHL output shaft **(B)**	**4512**	**4512**	4512	**4512**	**4512**	4512	**4512**	**4512**	4512	**4512**	**4512**	4512
	Output RPM	0.52	**0.27**	0.18	0.52	**0.27**	0.18	0.52	**0.27**	0.18	–	**–**	–
	Input Hp (max) **(C)**	0.12	**0.06**	0.04	0.12	**0.06**	0.04	0.12	**0.06**	0.04	–	**–**	–
6577.89	Output torque, in-lb	14612	**14612**	14612	14612	**14612**	14612	14612	**14612**	14612	–	**–**	–
	OHL input shaft	**(A)**	**(A)**	(A)	**(A)**	**(A)**	(A)	**(A)**	**(A)**	(A)	**–**	**–**	–
	OHL output shaft **(B)**	**4512**	**4512**	4512	**4512**	**4512**	4512	**4512**	**4512**	4512	**–**	**–**	–
	Output RPM	0.50	**0.25**	0.17	0.50	**0.25**	0.17	0.50	**0.25**	0.17	–	**–**	–
	Input Hp (max) **(C)**	0.12	**0.06**	0.04	0.12	**0.06**	0.04	0.12	**0.06**	0.04	–	**–**	–
6884.26	Output torque, in-lb	14612	**14612**	14612	14612	**14612**	14612	14612	**14612**	14612	–	**–**	–
	OHL input shaft	**(A)**	**(A)**	(A)	**(A)**	**(A)**	(A)	**(A)**	**(A)**	(A)	**–**	**–**	–
	OHL output shaft **(B)**	**4512**	**4512**	4512	**4512**	**4512**	4512	**4512**	**4512**	4512	**–**	**–**	–
	Output RPM	0.47	**0.24**	0.16	0.47	**0.24**	0.16	0.47	**0.24**	0.16	–	**–**	–
	Input Hp (max) **(C)**	0.11	**0.06**	0.04	0.11	**0.06**	0.04	0.11	**0.06**	0.04	–	**–**	–
7327.11	Output torque, in-lb	14612	**14612**	14612	14612	**14612**	14612	14612	**14612**	14612	–	**–**	–
	OHL input shaft	**(A)**	**(A)**	(A)	**(A)**	**(A)**	(A)	**(A)**	**(A)**	(A)	**–**	**–**	–
	OHL output shaft **(B)**	4512	**4512**	4512	4512	**4512**	4512	4512	**4512**	4512	–	**–**	–

Service factor: 1.0

(A) (B) (C) - See footnotes page on inside back cover

Blank areas (-) indicate configuration not available

RHB 108

Size: B_1083

Triple reduction – Clamp collar, three-piece coupled, separate

NEMA motor frame		—			140TC			180TC			—			210TC			250TC			280TC		
IEC motor frame		80D			90D			100D			112D			132D			160D			—		
Separate group		80			90			100			112			132			160			—		
Ratio	Output Rating data	3450	1750	1160	3450	1750	1160	3450	1750	1160	3450	1750	1160	3450	1750	1160	3450	1750	1160	3450	1750	1160
	Output RPM	–	–	–	–	–	–	–	–	–	449	228	151	449	228	151	449	228	151	449	228	151
	Input Hp (max) (C)	–	–	–	–	–	–	–	–	–	27.34	13.88	9.19	56.19	30.20	20.32	81.12	45.36	30.14	81.13	45.36	30.14
7.68	Output torque, in-lb	–	–	–	–	–	–	–	–	–	3834	3836	3834	7880	8348	8475	11375	12540	12569	11375	12540	12569
	OHL input shaft	–	–	–	–	–	–	–	–	–	(A)	838	872	(A)	946	993	(A)	1380	1574	(A)	1380	1574
	OHL output shaft (B)	–	–	–	–	–	–	–	–	–	(A)	5586	5586	(A)	5586	5586	(A)	5586	5586	(A)	5586	5586
	Output RPM	–	–	–	–	–	–	368	187	124	368	187	124	368	187	124	368	187	124	368	187	124
	Input Hp (max) (C)	–	–	–	–	–	–	20.42	10.36	6.87	27.34	13.88	9.19	53.27	28.63	19.27	69.65	37.72	25.33	69.65	37.72	25.33
9.36	Output torque, in-lb	–	–	–	–	–	–	3492	3494	3492	4676	4679	4676	9111	9655	9801	11912	12718	12883	11912	12718	12883
	OHL input shaft	–	–	–	–	–	–	(A)	713	742	(A)	843	877	(A)	952	993	(A)	1414	1575	(A)	1414	1575
	OHL output shaft (B)	–	–	–	–	–	–	(A)	5586	5586	(A)	5586	5586	(A)	5586	5586	(A)	5586	5586	(A)	5586	5586
	Output RPM	–	–	–	–	–	–	314	160	106	314	160	106	314	160	106	314	160	106	314	160	106
	Input Hp (max) (C)	–	–	–	–	–	–	20.42	10.36	6.87	27.34	13.88	9.19	50.56	27.18	18.29	60.13	32.56	21.86	60.13	32.56	21.86
10.97	Output Torque, In–Lb	–	–	–	–	–	–	4092	4094	4092	5479	5482	5479	10133	10737	10903	12050	12862	13027	12050	12862	13027
	OHL input shaft	–	–	–	–	–	–	(A)	713	742	(A)	843	877	(A)	952	994	(A)	1435	1586	(A)	1435	1586
	OHL output shaft (B)	–	–	–	–	–	–	(A)	5586	5586	(A)	5586	5586	(A)	5586	5586	(A)	5586	5586	(A)	5586	5586
	Output RPM	268	136	90	268	136	90	268	136	90	268	136	90	268	136	90	268	136	90	268	136	90
	Input Hp (max) (C)	3.64	2.46	1.63	9.86	5.01	3.32	20.42	10.36	6.87	27.34	13.87	9.19	47.55	25.56	17.21	51.74	28.01	18.81	51.74	28.01	18.81
12.90	Output torque, in-lb	857	1142	1141	2324	2325	2324	4810	4813	4810	6441	6444	6441	11203	11871	12056	12188	13010	13180	12188	13010	13180
	OHL input shaft	(A)	346	360	(A)	453	471	(A)	711	741	(A)	841	876	(A)	950	993	(A)	1452	1591	(A)	1452	1591
	OHL output shaft (B)	(A)	5586	5586	(A)	5586	5586	(A)	5586	5586	(A)	5586	5586	(A)	5586	5586	(A)	5586	5586	(A)	5586	5586
	Output RPM	–	–	–	–	–	–	–	–	–	251	127	84	251	127	84	251	127	84	251	127	84
	Input Hp (max) (C)	–	–	–	–	–	–	–	–	–	27.34	13.88	9.19	56.19	30.20	20.32	70.38	42.72	30.14	70.38	42.72	30.14
13.74	Output torque, in-lb	–	–	–	–	–	–	–	–	–	6861	6865	6861	14101	14939	15166	17662	21134	22493	17662	21134	22493
	OHL input shaft	–	–	–	–	–	–	–	–	–	(A)	838	872	(A)	946	993	(A)	1408	1574	(A)	1408	1574
	OHL output shaft (B)	–	–	–	–	–	–	–	–	–	(A)	5586	5586	(A)	5586	5586	(A)	5586	5586	(A)	5586	5586
	Output RPM	–	–	–	–	–	–	206	104	69	206	104	69	206	104	69	206	104	69	206	104	69
	Input Hp (max) (C)	–	–	–	–	–	–	20.42	10.36	6.87	27.34	13.88	9.19	53.27	28.64	19.27	61.24	37.17	26.73	61.24	37.17	26.73
16.75	Output torque, in-lb	–	–	–	–	–	–	6250	6253	6250	8368	8373	8368	16305	17279	17540	18744	22429	24330	18744	22429	24330
	OHL input shaft	–	–	–	–	–	–	(A)	713	742	(A)	843	877	(A)	952	993	(A)	1418	1587	(A)	1418	1587
	OHL output shaft (B)	–	–	–	–	–	–	5586	5586	5586	5586	5586	5586	5586	5586	5586	5586	5586	5586	5586	5586	5586
	Output RPM	–	–	–	–	–	–	178	90	60	178	90	60	178	90	60	178	90	60	178	90	60
	Input Hp (max) (C)	–	–	–	–	–	–	20.42	10.51	6.87	27.34	14.07	9.19	50.56	27.55	18.29	54.82	33.74	23.06	54.82	33.74	23.06
19.63	Output torque, in-lb	–	–	–	–	–	–	7323	7327	7323	9808	9811	9805	18134	19214	19511	19659	23527	24602	19659	23527	24602
	OHL input shaft	–	–	–	–	–	–	(A)	713	742	(A)	843	877	(A)	952	994	(A)	1423	1579	(A)	1423	1579
	OHL output shaft (B)	–	–	–	–	–	–	5586	5586	5586	5586	5586	5586	5586	5586	5586	5586	5586	5586	5586	5586	5586
	Output RPM	149	76	50	149	76	50	149	76	50	149	76	50	149	76	50	149	76	50	148	76	50
	Input Hp (max) (C)	3.64	2.46	1.63	9.86	5.01	3.32	20.42	10.36	6.87	27.34	13.88	9.19	47.55	25.56	17.21	48.93	29.56	19.85	48.93	29.56	19.85
23.08	Output torque, in-lb	1533	2044	2043	4158	4161	4158	8608	8613	8608	11526	11533	11526	20048	21244	21575	20629	24570	24886	20629	24570	24886
	OHL input shaft	(A)	346	360	(A)	453	471	(A)	711	741	(A)	841	876	(A)	950	993	(A)	1428	1587	(A)	1428	1587
	OHL output shaft (B)	5586	5586	5586	5586	5586	5586	5586	5586	5586	5586	5586	5586	5586	5586	5586	5586	5586	5586	5586	5586	5586
	Output RPM	130	66	44	130	66	44	130	66	44	130	66	44	130	66	44	130	66	44	130	66	44
	Input Hp (max) (C)	3.50	2.46	1.63	9.86	5.01	3.32	20.42	10.36	6.87	27.34	13.88	9.19	44.46	24.08	16.22	44.46	26.02	17.47	44.46	26.02	17.47
26.48	Output torque, in-lb	1694	2345	2344	4771	4774	4771	9877	9882	9877	13225	13232	13224	21504	22967	23331	21504	24813	25130	21504	24813	25130
	OHL input shaft	(A)	346	360	(A)	454	473	(A)	709	738	(A)	838	874	(A)	948	993	(A)	1443	1591	(A)	1443	1591
	OHL output shaft (B)	5586	5586	5586	5586	5586	5586	5586	5586	5586	5586	5586	5586	5586	5586	5586	5586	5586	5586	5586	5586	5586
	Output RPM	110	56	37	110	56	37	110	56	37	110	56	37	110	56	37	110	56	37	–	–	–
	Input Hp (max) (C)	3.32	2.46	1.63	9.86	5.01	3.32	20.42	10.36	6.87	27.34	13.88	9.19	39.58	22.30	14.98	39.58	22.31	14.98	–	–	–
31.25	Output torque, in-lb	1894	2768	2766	5631	5634	5631	11657	11664	11657	15608	15617	15608	22599	25101	25427	22599	25105	25427	–	–	–
	OHL input shaft	(A)	346	360	(A)	456	470	(A)	710	740	(A)	839	873	(A)	946	992	(A)	1457	1593	–	–	–
	OHL output shaft (B)	5586	5586	5586	5586	5586	5586	5586	5586	5586	5586	5586	5586	5586	5586	5586	5586	5586	5586	–	–	–
	Output RPM	102	52	34	102	52	34	102	52	34	102	52	34	102	52	34	102	52	34	–	–	–
	Input Hp (max) (C)	3.22	2.46	1.63	9.86	5.01	3.32	20.42	10.36	6.87	27.34	13.88	9.19	37.41	20.70	13.90	37.41	20.70	13.90	–	–	–
33.87	Output torque, in-lb	1993	3000	2998	6103	6107	6103	12635	12642	12635	16918	16928	16918	23150	25248	25574	23150	25248	25575	–	–	–
	OHL input shaft	(A)	346	360	(A)	456	474	(A)	707	739	(A)	757	873	(A)	948	992	(A)	1463	1595	–	–	–
	OHL output shaft (B)	5586	5586	5586	5586	5586	5586	5586	5586	5586	5586	5586	5586	5586	5586	5586	5586	5586	5586	–	–	–

Service factor: 1.0

(A) (B) (C) - See footnotes page on inside back cover

Blank areas (-) indicate configuration not available

RHB 108

Size: B_1083

Triple reduction – Clamp collar, three-piece coupled, separate

NEMA motor frame		—			140TC			180TC			—			210TC			250TC			280TC		
IEC motor frame		80D			90D			100D			112D			132D			160D			—		
Separate group		80			90			100			112			132			160			—		
Ratio	Output Rating data	3450	1750	1160	3450	1750	1160	3450	1750	1160	3450	1750	1160	3450	1750	1160	3450	1750	1160	3450	1750	1160
	Output RPM	–	–	–	–	–	–	–	–	–	95	48	32	95	48	32	95	48	32	–	–	–
	Input Hp (max) (C)	–	–	–	–	–	–	–	–	–	27.34	13.88	9.19	31.72	19.24	13.41	31.72	19.24	13.41	–	–	–
36.44	Output torque, in-lb	–	–	–	–	–	–	–	–	–	18199	18209	18199	21116	25251	26553	21116	25251	26552	–	–	–
	OHL input shaft	–	–	–	–	–	–	–	–	–	(A)	838	872	(A)	953	990	(A)	1530	1591	–	–	–
	OHL output shaft (B)	–	–	–	–	–	–	–	–	–	5586	5586	5586	5586	5586	5586	5586	5586	5586	–	–	–
	Output RPM	–	–	–	–	–	–	78	39	26	78	39	26	78	39	26	78	39	26	–	–	–
	Input Hp (max) (C)	–	–	–	–	–	–	20.42	10.36	6.87	27.34	13.88	9.19	27.61	16.60	11.00	27.61	16.60	11.00	–	–	–
44.44	Output torque, in-lb	–	–	–	–	–	–	16578	16587	16578	22197	22210	22197	22416	26568	26553	22416	26568	26553	–	–	–
	OHL input shaft	–	–	–	–	–	–	(A)	713	742	(A)	843	877	(A)	950	989	(A)	1531	1595	–	–	–
	OHL output shaft (B)	–	–	–	–	–	–	(A)	5586	5586	5586	5586	5586	5586	5586	5586	5586	5586	5586	–	–	–
	Output RPM	–	–	–	–	–	–	66	34	22	66	34	22	66	34	22	66	34	22	–	–	–
	Input Hp (max) (C)	–	–	–	–	–	–	20.42	10.36	6.87	24.71	13.88	9.19	24.71	14.17	9.38	24.71	14.17	9.38	–	–	–
52.08	Output torque, in-lb	–	–	–	–	–	–	19425	19436	19425	23507	26024	26010	23507	26568	26553	23507	26568	26553	–	–	–
	OHL input shaft	–	–	–	–	–	–	(A)	713	742	(A)	843	877	(A)	954	993	(A)	1533	1596	–	–	–
	OHL output shaft (B)	–	–	–	–	–	–	5586	5586	5586	5586	5586	5586	5586	5586	5586	5586	5586	5586	–	–	–
	Output RPM	56	29	19	56	29	19	56	29	19	56	29	19	56	29	19	56	29	19	–	–	–
	Input Hp (max) (C)	3.64	2.46	1.63	9.86	5.01	3.32	20.42	10.36	6.87	22.06	12.05	7.98	20.04	12.05	7.98	22.06	12.05	7.98	–	–	–
61.22	Output torque, in-lb	4067	5421	5418	11030	11036	11030	22834	22847	22834	24675	26568	26553	24674	26568	26553	24675	26568	26553	–	–	–
	OHL input shaft	(A)	346	360	(A)	453	471	(A)	711	741	(A)	843	878	(A)	956	995	(A)	1534	1596	–	–	–
	OHL output shaft (B)	5586	5586	5586	5586	5586	5586	5586	5586	5586	5586	5586	5586	5586	5586	5586	5586	5586	5586	–	–	–
	Output RPM	49	25	17	49	25	17	49	25	17	49	25	17	49	25	17	49	25	17	–	–	–
	Input Hp (max) (C)	3.50	2.46	1.63	9.86	5.01	3.32	20.04	10.36	6.87	20.04	10.50	6.96	17.53	10.50	6.96	20.04	10.50	6.96	–	–	–
70.24	Output torque, in-lb	4493	6220	6217	12655	12662	12655	25711	26213	26199	25711	26568	26553	25710	26568	26553	25711	26568	26553	–	–	–
	OHL input shaft	(A)	346	360	(A)	454	473	(A)	709	738	(A)	836	871	(A)	957	997	(A)	1534	1597	–	–	–
	OHL output shaft (B)	5586	5586	5586	5586	5586	5586	5586	5586	5586	5586	5586	5586	5586	5586	5586	5586	5586	5586	–	–	–
	Output RPM	42	21	14	42	21	14	42	21	14	42	21	14	42	21	14	42	21	14	–	–	–
	Input Hp (max) (C)	3.32	2.46	1.63	9.86	5.01	3.32	17.53	8.90	5.90	17.53	8.90	5.90	16.18	8.90	5.90	17.53	8.90	5.90	–	–	–
82.90	Output torque, in-lb	5024	7341	7337	14936	14945	14936	26553	26568	26553	26553	26568	26553	26552	26568	26553	26553	26568	26553	–	–	–
	OHL input shaft	(A)	346	360	(A)	456	470	(A)	711	741	(A)	840	870	(A)	958	997	(A)	1534	1597	–	–	–
	OHL output shaft (B)	5586	5586	5586	5586	5586	5586	5586	5586	5586	5586	5586	5586	5586	5586	5586	5586	5586	5586	–	–	–
	Output RPM	38	19	13	38	19	13	38	19	13	38	19	13	38	19	13	38	19	13	–	–	–
	Input Hp (max) (C)	3.22	2.46	1.63	9.86	5.01	3.32	16.18	8.21	5.44	16.18	8.21	5.44	14.55	8.21	5.44	16.18	8.21	5.44	–	–	–
89.85	Output torque, in-lb	5286	7957	7953	16190	16199	16190	26553	26568	26553	26553	26568	26553	26553	26568	26553	26553	26568	26553	–	–	–
	OHL input shaft	(A)	346	360	(A)	456	474	(A)	712	742	(A)	837	872	(A)	958	997	(A)	1534	1597	–	–	–
	OHL output shaft (B)	5586	5586	5586	5586	5586	5586	5586	5586	5586	5586	5586	5586	5586	5586	5586	5586	5586	5586	–	–	–
	Output RPM	35	18	12	35	18	12	35	18	12	35	18	12	35	18	12	35	18	12	–	–	–
	Input Hp (max) (C)	3.08	2.46	1.63	9.86	5.01	3.32	14.55	7.38	4.89	14.55	7.38	4.89	13.39	7.38	4.89	14.55	7.38	4.89	–	–	–
99.90	Output torque, in-lb	5629	8847	8842	18000	18011	18000	26553	26568	26553	26553	26568	26553	26553	26568	26553	26553	26568	26553	–	–	–
	OHL input shaft	(A)	346	360	(A)	456	474	(A)	713	742	(A)	840	874	(A)	959	998	(A)	1534	1597	–	–	–
	OHL output shaft (B)	5586	5586	5586	5586	5586	5586	5586	5586	5586	5586	5586	5586	5586	5586	5586	5586	5586	5586	–	–	–
	Output RPM	32	16	11	32	16	11	32	16	11	32	16	11	32	16	11	32	16	11	–	–	–
	Input Hp (max) (C)	2.97	2.46	1.63	9.86	5.01	3.32	13.39	6.80	4.50	13.39	6.80	4.50	12.11	6.80	4.50	13.39	6.80	4.50	–	–	–
108.52	Output torque, in-lb	5896	9610	9605	19553	19564	19552	26553	26568	26553	26553	26568	26553	26553	26568	26553	26553	26568	26553	–	–	–
	OHL input shaft	(A)	346	360	(A)	455	475	(A)	714	743	(A)	841	875	(A)	959	998	(A)	1534	1597	–	–	–
	OHL output shaft (B)	5586	5586	5586	5586	5586	5586	5586	5586	5586	5586	5586	5586	5586	5586	5586	5586	5586	5586	–	–	–
	Output RPM	29	15	10	29	15	10	29	15	10	29	15	10	29	15	10	29	15	10	–	–	–
	Input Hp (max) (C)	2.83	2.46	1.63	9.86	5.01	3.32	12.11	6.15	4.07	12.11	6.15	4.07	11.28	6.15	4.07	12.11	6.15	4.07	–	–	–
120.03	Output torque, in-lb	6216	10630	10624	21628	21640	21627	26553	26568	26553	26553	26568	26553	26553	26568	26553	26553	26568	26553	–	–	–
	OHL input shaft	(A)	346	360	(A)	454	475	(A)	714	743	(A)	842	877	(A)	959	998	(A)	1534	1597	–	–	–
	OHL output shaft (B)	5586	5586	5586	5586	5586	5586	5586	5586	5586	5586	5586	5586	5586	5586	5586	5586	5586	5586	–	–	–
	Output RPM	27	14	9	27	14	9	27	14	9	27	14	9	27	14	9	27	14	9	–	–	–
	Input Hp (max) (C)	2.73	2.46	1.63	9.63	5.01	3.32	11.28	5.72	3.79	11.28	5.72	3.79	10.47	5.72	3.79	11.28	5.72	3.79	–	–	–
128.86	Output torque, in-lb	6438	11412	11406	22676	23232	23218	26553	26568	26553	26553	26568	26553	26553	26568	26553	26553	26568	26553	–	–	–
	OHL input shaft	(A)	346	360	(A)	453	475	(A)	714	736	(A)	843	877	(A)	946	998	(A)	1534	1597	–	–	–
	OHL output shaft (B)	5586	5586	5586	5586	5586	5586	5586	5586	5586	5586	5586	5586	5586	5586	5586	5586	5586	5586	–	–	–

Service factor: 1.0

(A) (B) (C) - See footnotes page on inside back cover

Blank areas (-) indicate configuration not available

RHB 108

Size: B_1083

Triple reduction – Clamp collar, three-piece coupled, separate

NEMA motor frame		—			140TC			180TC			—			210TC			250TC			280TC		
IEC motor frame		80D			90D			100D			112D			132D			160D			—		
Separate group		80			90			100			112			132			160			—		
Ratio	Output Rating data	3450	1750	1160	3450	1750	1160	3450	1750	1160	3450	1750	1160	3450	1750	1160	3450	1750	1160	3450	1750	1160
	Output RPM	25	**13**	8	25	**13**	8	25	**13**	8	25	**13**	8	25	**13**	8	–	–	–	–	–	–
	Input Hp (max) **(C)**	2.63	**2.46**	1.63	9.26	**4.84**	3.32	10.47	**5.31**	3.52	10.47	**5.31**	3.52	9.67	**5.31**	3.52	–	–	–	–	–	–
138.87	Output torque, in-lb	6668	**12298**	12291	23489	**24183**	25021	26553	**26568**	26553	26553	**26568**	26553	26553	**26568**	26556	–	–	–	–	–	–
	OHL input shaft	**(A)**	**346**	360	**(A)**	**452**	474	**(A)**	**708**	738	**(A)**	**843**	878	**(A)**	**946**	998	–	–	–	–	–	–
	OHL output shaft **(B)**	5586	**5586**	5586	5586	**5586**	5586	5586	**5586**	5586	5586	**5586**	5586	5586	**5586**	5586	–	–	–	–	–	–
	Output RPM	23	**12**	8	23	**12**	8	23	**12**	8	23	**12**	8	23	**12**	8	–	–	–	–	–	–
	Input Hp (max) **(C)**	2.52	**2.46**	1.63	8.87	**4.63**	3.20	9.67	**4.91**	3.25	9.67	**4.91**	3.25	8.89	**4.91**	3.25	–	–	–	–	–	–
150.31	Output torque, in-lb	6907	**13311**	13304	24350	**25073**	26122	26553	**26568**	26553	26553	**26568**	26553	26553	**26568**	26553	–	–	–	–	–	–
	OHL input shaft	**(A)**	**345**	359	**(A)**	**452**	474	**(A)**	**709**	736	**(A)**	**843**	878	**(A)**	**946**	998	–	–	–	–	–	–
	OHL output shaft **(B)**	5586	**5586**	5586	5586	**5586**	5586	5586	**5586**	5586	5586	**5586**	5586	5586	**5586**	5586	–	–	–	–	–	–
	Output RPM	21	**11**	7	21	**11**	7	21	**11**	7	21	**11**	7	21	**11**	7	–	–	–	–	–	–
	Input Hp (max) **(C)**	2.40	**2.46**	1.63	8.46	**4.42**	2.99	8.89	**4.51**	2.99	8.89	**4.51**	2.99	8.12	**4.51**	2.99	–	–	–	–	–	–
163.51	Output torque, in-lb	7159	**14480**	14472	25277	**26033**	26552	26553	**26568**	26553	26553	**26568**	26553	26553	**26568**	26553	–	–	–	–	–	–
	OHL input shaft	**(A)**	**345**	359	**(A)**	**454**	474	**(A)**	**709**	738	**(A)**	**844**	878	**(A)**	**946**	998	–	–	–	–	–	–
	OHL output shaft **(B)**	5586	**5586**	5586	5586	**5586**	5586	5586	**5586**	5586	5586	**5586**	5586	5586	**5586**	5586	–	–	–	–	–	–
	Output RPM	19	**10**	6	19	**10**	6	19	**10**	6	19	**10**	6	–	–	–	–	–	–	–	–	–
	Input Hp (max) **(C)**	2.27	**2.46**	1.63	8.05	**4.12**	2.73	8.12	**4.12**	2.73	8.12	**4.12**	2.73	–	–	–	–	–	–	–	–	–
178.90	Output torque, in-lb	7425	**15844**	15834	26296	**26568**	26552	26553	**26568**	26553	26553	**26568**	26553	–	–	–	–	–	–	–	–	–
	OHL input shaft	**(A)**	**345**	359	**(A)**	**452**	474	**(A)**	**710**	739	**(A)**	**844**	879	–	–	–	–	–	–	–	–	–
	OHL output shaft **(B)**	5586	**5586**	5586	5586	**5586**	5586	5586	**5586**	5586	5586	**5586**	5586	–	–	–	–	–	–	–	–	–
	Output RPM	17	**9**	6	17	**9**	6	17	**9**	6	17	**9**	6	–	–	–	–	–	–	–	–	–
	Input Hp (max) **(C)**	2.12	**2.46**	1.63	7.23	**3.67**	2.43	7.23	**3.67**	2.43	7.23	**3.67**	2.43	–	–	–	–	–	–	–	–	–
201.11	Output torque, in-lb	7773	**17810**	17800	26553	**26568**	26552	26553	**26568**	26553	26553	**26568**	26553	–	–	–	–	–	–	–	–	–
	OHL input shaft	**(A)**	**344**	359	**(A)**	**454**	474	**(A)**	**711**	740	**(A)**	**(A)**	879	–	–	–	–	–	–	–	–	–
	OHL output shaft **(B)**	5586	**5586**	5586	5586	**5586**	5586	5586	**5586**	5586	5586	**5586**	5586	–	–	–	–	–	–	–	–	–
	Output RPM	16	**8**	5	16	**8**	5	16	**8**	5	16	**8**	5	–	–	–	–	–	–	–	–	–
	Input Hp (max) **(C)**	2.00	**2.46**	1.63	6.62	**3.36**	2.23	6.62	**3.36**	2.23	6.62	**3.36**	2.23	–	–	–	–	–	–	–	–	–
219.64	Output torque, in-lb	8042	**19451**	19440	26553	**26568**	26552	26553	**26568**	26553	26553	**26568**	26553	–	–	–	–	–	–	–	–	–
	OHL input shaft	**(A)**	**343**	359	**(A)**	**455**	474	**(A)**	**712**	741	(A)	**(A)**	879	–	–	–	–	–	–	–	–	–
	OHL output shaft **(B)**	5586	**5586**	5586	5586	**5586**	5586	5586	**5586**	5586	5586	**5586**	5586	–	–	–	–	–	–	–	–	–
	Output RPM	14	**7**	5	14	**7**	5	14	**7**	5	–	–	–	–	–	–	–	–	–	–	–	–
	Input Hp (max) **(C)**	1.88	**2.37**	1.55	5.97	**3.03**	2.01	5.97	**3.03**	2.01	–	–	–	–	–	–	–	–	–	–	–	–
243.47	Output torque, in-lb	8373	**20802**	20562	26553	**26568**	26553	26553	**26553**	26553	–	–	–	–	–	–	–	–	–	–	–	–
	OHL input shaft	**(A)**	**343**	359	**(A)**	**455**	474	**(A)**	**713**	742	–	–	–	–	–	–	–	–	–	–	–	–
	OHL output shaft **(B)**	5586	**5586**	5586	5586	**5586**	5586	5586	**5586**	5586	–	–	–	–	–	–	–	–	–	–	–	–
	Output RPM	12	**6**	4	12	**6**	4	–	–	–	–	–	–	–	–	–	–	–	–	–	–	–
	Input Hp (max) **(C)**	1.72	**2.17**	1.42	5.23	**2.65**	1.76	–	–	–	–	–	–	–	–	–	–	–	–	–	–	–
278.10	Output torque, in-lb	8761	**21764**	21461	26553	**26568**	26553	–	–	–	–	–	–	–	–	–	–	–	–	–	–	–
	OHL input shaft	**(A)**	**343**	359	**(A)**	**456**	475	–	–	–	–	–	–	–	–	–	–	–	–	–	–	–
	OHL output shaft **(B)**	5586	**5586**	5586	5586	**5586**	5586	–	–	–	–	–	–	–	–	–	–	–	–	–	–	–
	Output RPM	11	**6**	4	11	**6**	4	–	–	–	–	–	–	–	–	–	–	–	–	–	–	–
	Input Hp (max) **(C)**	1.61	**2.03**	1.32	4.73	**2.40**	1.59	–	–	–	–	–	–	–	–	–	–	–	–	–	–	–
307.24	Output torque, in-lb	9029	**22430**	22082	22970	**26568**	25389	–	–	–	–	–	–	–	–	–	–	–	–	–	–	–
	OHL input shaft	**(A)**	**343**	359	**(A)**	**456**	475	–	–	–	–	–	–	–	–	–	–	–	–	–	–	–
	OHL output shaft **(B)**	5586	**5586**	5586	5586	**5586**	5586	–	–	–	–	–	–	–	–	–	–	–	–	–	–	–

Service factor: 1.0

(A) (B) (C) - See footnotes page on inside back cover

Blank areas (-) indicate configuration not available

RHB 108

Size: B_1084

Four-stage reduction – Clamp collar, three-piece coupled, separate

NEMA motor frame		56C			—			140TC			180TC			—		
IEC motor frame		71D			80D			90D			100D			112D		
Separate group		71			80			90			100			112		
Ratio	Output Rating data	3450	1750	1160	3450	1750	1160	3450	1750	1160	3450	1750	1160	3450	1750	1160
	Output RPM	11.11	**5.64**	3.74	11.11	**5.64**	3.74	11.11	**5.64**	3.74	11.11	**5.64**	3.74	11.11	**5.64**	3.74
	Input Hp (max) **(C)**	3.98	**2.02**	1.34	4.68	**2.38**	1.57	4.68	**2.38**	1.57	4.68	**2.38**	1.57	4.68	**2.38**	1.57
310.55	Output torque, in-lb	22579	**22592**	22610	26568	**26568**	26568	26568	**26568**	26568	26568	**26568**	26568	26568	**26568**	26568
	OHL input shaft	(A)	**(A)**	(A)	**(A)**	**(A)**	(A)	**(A)**	**(A)**	(A)	**(A)**	**(A)**	(A)	**(A)**	**(A)**	(A)
	OHL output shaft **(B)**	5586	**5586**	5586	**5586**	**5586**	5586	**5586**	**5586**	5586	**5586**	**5586**	5586	**5586**	**5586**	5586
	Output RPM	10.31	**5.23**	3.47	10.31	**5.23**	3.47	10.31	**5.23**	3.47	10.31	**5.23**	3.47	10.31	**5.23**	3.47
	Input Hp (max) **(C)**	3.98	**2.02**	1.34	4.35	**2.20**	1.57	4.35	**2.20**	1.57	4.35	**2.20**	1.57	4.35	**2.20**	1.57
334.68	Output torque, in-lb	24333	**24347**	24366	26568	**26568**	26568	26568	**26568**	26568	26568	**26568**	26568	26568	**26568**	26568
	OHL input shaft	(A)	**(A)**	(A)	**(A)**	**(A)**	(A)	**(A)**	**(A)**	(A)	**(A)**	**(A)**	(A)	**(A)**	**(A)**	(A)
	OHL output shaft **(B)**	5586	**5586**	5586	**5586**	**5586**	5586	**5586**	**5586**	5586	**5586**	**5586**	5586	**5586**	**5586**	5586
	Output RPM	9.20	**4.67**	3.09	9.20	**4.67**	3.09	9.20	**4.67**	3.09	9.20	**4.67**	3.09	9.20	**4.67**	3.09
	Input Hp (max) **(C)**	3.88	**1.97**	1.30	3.88	**1.97**	1.30	3.88	**1.97**	1.30	3.88	**1.97**	1.30	3.88	**1.97**	1.30
374.95	Output torque, in-lb	26568	**26568**	26568	26568	**26568**	26568	26568	**26568**	26568	26568	**26568**	26568	26568	**26568**	26568
	OHL input shaft	(A)	**(A)**	(A)	**(A)**	**(A)**	(A)	**(A)**	**(A)**	(A)	**(A)**	**(A)**	(A)	**(A)**	**(A)**	(A)
	OHL output shaft **(B)**	5586	**5586**	5586	**5586**	**5586**	5586	**5586**	**5586**	5586	**5586**	**5586**	5586	**5586**	**5586**	5586
	Output RPM	8.07	**4.10**	2.71	8.07	**4.10**	2.71	8.07	**4.10**	2.71	8.07	**4.10**	2.71	8.07	**4.10**	2.71
	Input Hp (max) **(C)**	3.40	**1.73**	1.14	3.40	**1.73**	1.14	3.40	**1.73**	1.14	3.40	**1.73**	1.14	3.40	**1.73**	1.14
427.31	Output torque, in-lb	26568	**26568**	26568	26568	**26568**	26568	26568	**26568**	26568	26568	**26568**	26568	26568	**26568**	26568
	OHL input shaft	**(A)**	**(A)**	(A)	**(A)**	**(A)**	(A)	**(A)**	**(A)**	(A)	**(A)**	**(A)**	(A)	**(A)**	**(A)**	(A)
	OHL output shaft **(B)**	5586	**5586**	5586	5586	**5586**	5586	5586	**5586**	5586	5586	**5586**	5586	5586	**5586**	5586
	Output RPM	7.43	**3.77**	2.50	7.43	**3.77**	2.50	7.43	**3.77**	2.50	7.43	**3.77**	2.50	7.43	**3.77**	2.50
	Input Hp (max) **(C)**	3.13	**1.59**	1.05	3.13	**1.59**	1.05	3.13	**1.59**	1.05	3.13	**1.59**	1.05	3.13	**1.59**	1.05
464.52	Output torque, in-lb	26568	**26568**	26568	26568	**26568**	26568	26568	**26568**	26568	26568	**26568**	26568	26568	**26568**	26568
	OHL input shaft	**(A)**	**(A)**	(A)	**(A)**	**(A)**	(A)	**(A)**	**(A)**	(A)	**(A)**	**(A)**	(A)	**(A)**	**(A)**	(A)
	OHL output shaft **(B)**	5586	**5586**	5586	5586	**5586**	5586	5586	**5586**	5586	5586	**5586**	5586	5586	**5586**	5586
	Output RPM	6.22	**3.16**	2.09	6.22	**3.16**	2.09	6.22	**3.16**	2.09	6.22	**3.16**	2.09	6.22	**3.16**	2.09
	Input Hp (max) **(C)**	2.62	**1.33**	0.88	2.62	**1.33**	0.88	2.62	**1.33**	0.88	2.62	**1.33**	0.88	2.62	**1.33**	0.88
554.54	Output torque, in-lb	26568	**26568**	26568	26568	**26568**	26568	26568	**26568**	26568	26568	**26568**	26568	26568	**26568**	26568
	OHL input shaft	**(A)**	**(A)**	(A)	**(A)**	**(A)**	(A)	**(A)**	**(A)**	(A)	**(A)**	**(A)**	(A)	**(A)**	**(A)**	(A)
	OHL output shaft **(B)**	5586	**5586**	5586	5586	**5586**	5586	5586	**5586**	5586	5586	**5586**	5586	5586	**5586**	5586
	Output RPM	5.42	**2.75**	1.82	5.42	**2.75**	1.82	5.42	**2.75**	1.82	5.42	**2.75**	1.82	5.42	**2.75**	1.82
	Input Hp (max) **(C)**	2.28	**1.16**	0.77	2.28	**1.16**	0.77	2.28	**1.16**	0.77	2.28	**1.16**	0.77	2.28	**1.16**	0.77
636.88	Output torque, in-lb	26568	**26568**	26568	26568	**26568**	26568	26568	**26568**	26568	26568	**26568**	26568	26568	**26568**	26568
	OHL input shaft	(A)	**(A)**	(A)	**(A)**	**(A)**	(A)	**(A)**	**(A)**	(A)	**(A)**	**(A)**	(A)	**(A)**	**(A)**	(A)
	OHL output shaft **(B)**	5586	**5586**	5586	5586	**5586**	5586	5586	**5586**	5586	5586	**5586**	5586	5586	**5586**	5586
	Output RPM	4.80	**2.44**	1.62	4.80	**2.44**	1.62	4.80	**2.44**	1.62	4.80	**2.44**	1.62	4.80	**2.44**	1.62
	Input Hp (max) **(C)**	2.02	**1.03**	0.68	2.02	**1.03**	0.68	2.02	**1.03**	0.68	2.02	**1.03**	0.68	2.02	**1.03**	0.68
718.24	Output torque, in-lb	26568	**26568**	26568	26568	**26568**	26568	26568	**26568**	26568	26568	**26568**	26568	26568	**26568**	26568
	OHL input shaft	(A)	**(A)**	(A)	**(A)**	**(A)**	(A)	**(A)**	**(A)**	(A)	**(A)**	**(A)**	(A)	**(A)**	**(A)**	(A)
	OHL output shaft **(B)**	5586	**5586**	5586	5586	**5586**	5586	5586	**5586**	5586	5586	**5586**	5586	5586	**5586**	5586
	Output RPM	4.15	**2.11**	1.40	4.15	**2.11**	1.40	4.15	**2.11**	1.40	4.15	**2.11**	1.40	4.15	**2.11**	1.40
	Input Hp (max) **(C)**	1.75	**0.89**	0.59	1.75	**0.89**	0.59	1.75	**0.89**	0.59	1.75	**0.89**	0.59	1.75	**0.89**	0.59
830.63	Output torque, in-lb	26568	**26568**	26568	26568	**26568**	26568	26568	**26568**	26568	26568	**26568**	26568	26568	**26568**	26568
	OHL input shaft	(A)	**(A)**	(A)	**(A)**	**(A)**	(A)	**(A)**	**(A)**	(A)	**(A)**	**(A)**	(A)	**(A)**	**(A)**	(A)
	OHL output shaft **(B)**	5586	**5586**	5586	5586	**5586**	5586	5586	**5586**	5586	5586	**5586**	5586	5586	**5586**	5586
	Output RPM	3.63	**1.84**	1.22	3.63	**1.84**	1.22	3.63	**1.84**	1.22	3.63	**1.84**	1.22	3.63	**1.84**	1.22
	Input Hp (max) **(C)**	1.53	**0.78**	0.51	1.53	**0.78**	0.51	1.53	**0.78**	0.51	1.53	**0.78**	0.51	1.53	**0.78**	0.51
951.46	Output torque, in-lb	26568	**26568**	26568	26568	**26568**	26568	26568	**26568**	26568	26568	**26568**	26568	26568	**26568**	26568
	OHL input shaft	(A)	**(A)**	(A)	(A)	**(A)**	(A)	(A)	**(A)**	(A)	(A)	**(A)**	(A)	(A)	**(A)**	(A)
	OHL output shaft **(B)**	5586	**5586**	5586	5586	**5586**	5586	5586	**5586**	5586	5586	**5586**	5586	5586	**5586**	5586
	Output RPM	3.18	**1.61**	1.07	3.18	**1.61**	1.07	3.18	**1.61**	1.07	–	**–**	–	–	**–**	–
	Input Hp (max) **(C)**	1.34	**0.68**	0.45	1.34	**0.68**	0.45	1.34	**0.68**	0.45	–	**–**	–	–	**–**	–
1085.20	Output torque, in-lb	26568	**26568**	26568	26568	**26568**	26568	26568	**26568**	26568	–	**–**	–	–	**–**	–
	OHL input shaft	(A)	**(A)**	(A)	(A)	**(A)**	(A)	(A)	**(A)**	(A)	–	**–**	–	–	**–**	–
	OHL output shaft **(B)**	5586	**5586**	5586	5586	**5586**	5586	5586	**5586**	5586	–	**–**	–	–	**–**	–

Service factor: 1.0

(A) (B) (C) - See footnotes page on inside back cover

Blank areas (-) indicate configuration not available

RHB 108

Size: B_1084

Four-stage reduction – Clamp collar, three-piece coupled, separate

NEMA motor frame		56C			—			140TC			180TC			—		
IEC motor frame		71D			80D			90D			100D			112D		
Separate group		71			80			90			100			112		
Ratio	Output Rating data	3450	1750	1160	3450	1750	1160	3450	1750	1160	3450	1750	1160	3450	1750	1160
	Output RPM	2.81	**1.43**	0.94	2.81	**1.43**	0.94	2.81	**1.43**	0.94	–	–	–	–	–	–
	Input Hp (max) **(C)**	1.18	**0.60**	0.40	1.18	**0.60**	0.40	1.18	**0.60**	0.40	–	–	–	–	–	–
1228.03	Output torque, in-lb	26568	**26568**	26568	26568	**26568**	26568	26568	**26568**	26568	–	–	–	–	–	–
	OHL input shaft	(A)	**(A)**	(A)	(A)	**(A)**	(A)	(A)	**(A)**	(A)	–	–	–	–	–	–
	OHL output shaft **(B)**	5586	**5586**	5586	5586	**5586**	5586	5586	**5586**	5586	–	–	–	–	–	–
	Output RPM	2.45	**1.24**	0.82	2.45	**1.24**	0.82	2.45	**1.24**	0.82	2.45	**1.24**	0.82	–	–	–
	Input Hp (max) **(C)**	1.03	**0.52**	0.35	1.03	**0.52**	0.35	1.03	**0.52**	0.35	1.03	**0.52**	0.35	–	–	–
1407.77	Output torque, in-lb	26568	**26568**	26568	26568	**26568**	26568	26568	**26568**	26568	26568	**26568**	26568	–	–	–
	OHL input shaft	(A)	**(A)**	(A)	(A)	**(A)**	(A)	(A)	**(A)**	(A)	(A)	**(A)**	(A)	–	–	–
	OHL output shaft **(B)**	5586	**5586**	5586	5586	**5586**	5586	5586	**5586**	5586	5586	**5586**	5586	–	–	–
	Output RPM	2.10	**1.07**	0.71	2.10	**1.07**	0.71	2.10	**1.07**	0.71	–	–	–	–	–	–
	Input Hp (max) **(C)**	0.89	**0.45**	0.30	0.89	**0.45**	0.30	0.89	**0.45**	0.30	–	–	–	–	–	–
1643.07	Output torque, in-lb	26568	**26568**	26568	26568	**26568**	26568	26568	**26568**	26568	–	–	–	–	–	–
	OHL input shaft	(A)	**(A)**	(A)	(A)	**(A)**	(A)	(A)	**(A)**	(A)	–	–	–	–	–	–
	OHL output shaft **(B)**	5586	**5586**	5586	5586	**5586**	5586	5586	**5586**	5586	–	–	–	–	–	–
	Output RPM	1.87	**0.95**	0.63	1.87	**0.95**	0.63	–	–	–	–	–	–	–	–	–
	Input Hp (max) **(C)**	0.79	**0.40**	0.26	0.79	**0.40**	0.26	–	–	–	–	–	–	–	–	–
1847.66	Output torque, in-lb	26568	**26568**	26568	26568	**26568**	26568	–	–	–	–	–	–	–	–	–
	OHL input shaft	(A)	**(A)**	(A)	(A)	**(A)**	(A)	–	–	–	–	–	–	–	–	–
	OHL output shaft **(B)**	5586	**5586**	5586	5586	**5586**	5586	–	–	–	–	–	–	–	–	–
	Output RPM	1.71	**0.87**	0.57	1.71	**0.87**	0.57	–	–	–	–	–	–	–	–	–
	Input Hp (max) **(C)**	0.72	**0.36**	0.24	0.72	**0.36**	0.24	–	–	–	–	–	–	–	–	–
2021.57	Output torque, in-lb	26568	**26568**	26568	26568	**26568**	26568	–	–	–	–	–	–	–	–	–
	OHL input shaft	(A)	**(A)**	(A)	(A)	**(A)**	(A)	–	–	–	–	–	–	–	–	–
	OHL output shaft **(B)**	5586	**5586**	5586	5586	**5586**	5586	–	–	–	–	–	–	–	–	–
	Output RPM	1.57	**0.80**	0.53	1.57	**0.80**	0.53	1.57	**0.80**	0.53	–	–	–	–	–	–
	Input Hp (max) **(C)**	0.66	**0.34**	0.22	0.66	**0.34**	0.22	0.66	**0.34**	0.22	–	–	–	–	–	–
2196.40	Output torque, in-lb	26568	**26568**	26568	26568	**26568**	26568	26568	**26568**	26568	–	–	–	–	–	–
	OHL input shaft	(A)	**(A)**	(A)	(A)	**(A)**	(A)	(A)	**(A)**	(A)	–	–	–	–	–	–
	OHL output shaft **(B)**	5586	**5586**	5586	5586	**5586**	5586	5586	**5586**	5586	–	–	–	–	–	–
	Output RPM	1.42	**0.72**	0.48	1.42	**0.72**	0.48	1.42	**0.72**	0.48	–	–	–	–	–	–
	Input Hp (max) **(C)**	0.60	**0.30**	0.20	0.60	**0.30**	0.20	0.60	**0.30**	0.20	–	–	–	–	–	–
2434.70	Output torque, in-lb	26568	**26568**	26568	26568	**26568**	26568	26568	**26568**	26568	–	–	–	–	–	–
	OHL input shaft	(A)	**(A)**	(A)	(A)	**(A)**	(A)	(A)	**(A)**	(A)	–	–	–	–	–	–
	OHL output shaft **(B)**	5586	**5586**	5586	5586	**5586**	5586	5586	**5586**	5586	–	–	–	–	–	–
	Output RPM	1.25	**0.64**	0.42	1.25	**0.64**	0.42	–	–	–	–	–	–	–	–	–
	Input Hp (max) **(C)**	0.53	**0.27**	0.18	0.53	**0.27**	0.18	–	–	–	–	–	–	–	–	–
2751.21	Output torque, in-lb	26568	**26568**	26568	26568	**26568**	26568	–	–	–	–	–	–	–	–	–
	OHL input shaft	(A)	**(A)**	(A)	(A)	**(A)**	(A)	–	–	–	–	–	–	–	–	–
	OHL output shaft **(B)**	5586	**5586**	5586	5586	**5586**	5586	–	–	–	–	–	–	–	–	–

Service factor: 1.0

(A) (B) (C) - See footnotes page on inside back cover

Blank areas (-) indicate configuration not available

RHB 108

Size: B_1085

Five-stage reduction – Clamp collar, three-piece coupled, separate

NEMA motor frame		56C			—			140TC			180TC			—		
IEC motor frame		71D			80D			90D			100D			112D		
Separate group		71			80			90			100			112		
Ratio	Output Rating data	3450	1750	1160	3450	1750	1160	3450	1750	1160	3450	1750	1160	3450	1750	1160
	Output RPM	1.44	0.73	0.48	1.44	0.73	0.48	1.44	0.73	0.48	1.44	0.73	0.48	1.44	0.73	0.48
	Input Hp (max) (C)	0.61	0.31	0.20	0.61	0.31	0.20	0.61	0.31	0.20	0.61	0.31	0.20	0.61	0.31	0.20
2393.68	Output torque, in-lb	26568	26568	26568	26568	26568	26568	26568	26568	26568	26568	26568	26568	26568	26568	26568
	OHL input shaft	(A)	(A)	(A)	(A)	(A)	(A)	(A)	(A)	(A)	(A)	(A)	(A)	(A)	(A)	(A)
	OHL output shaft (B)	5586	5586	5586	5586	5586	5586	5586	5586	5586	5586	5586	5586	5586	5586	5586
	Output RPM	1.28	0.65	0.43	1.28	0.65	0.43	1.28	0.65	0.43	1.28	0.65	0.43	1.28	0.65	0.43
	Input Hp (max) (C)	0.54	0.27	0.18	0.54	0.27	0.18	0.54	0.27	0.18	0.54	0.27	0.18	0.54	0.27	0.18
2699.62	Output torque, in-lb	26568	26568	26568	26568	26568	26568	26568	26568	26568	26568	26568	26568	26568	26568	26568
	OHL input shaft	(A)	(A)	(A)	(A)	(A)	(A)	(A)	(A)	(A)	(A)	(A)	(A)	(A)	(A)	(A)
	OHL output shaft (B)	5586	5586	5586	5586	5586	5586	5586	5586	5586	5586	5586	5586	5586	5586	5586
	Output RPM	1.11	0.56	0.37	1.11	0.56	0.37	1.11	0.56	0.37	1.11	0.56	0.37	–	–	–
	Input Hp (max) (C)	0.47	0.24	0.16	0.47	0.24	0.16	0.47	0.24	0.16	0.47	0.24	0.16	–	–	–
3118.86	Output torque, in-lb	26568	26568	26568	26568	26568	26568	26568	26568	26568	26568	26568	26568	–	–	–
	OHL input shaft	(A)	(A)	(A)	(A)	(A)	(A)	(A)	(A)	(A)	(A)	(A)	(A)	–	–	–
	OHL output shaft (B)	5586	5586	5586	5586	5586	5586	5586	5586	5586	5586	5586	5586	–	–	–
	Output RPM	0.97	0.49	0.32	0.97	0.49	0.32	0.97	0.49	0.32	0.97	0.49	0.32	0.97	0.49	0.32
	Input Hp (max) (C)	0.41	0.21	0.14	0.41	0.21	0.14	0.41	0.21	0.14	0.41	0.21	0.14	0.41	0.21	0.14
3574.14	Output torque, in-lb	26568	26568	26568	26568	26568	26568	26568	26568	26568	26568	26568	26568	26568	26568	26568
	OHL input shaft	(A)	(A)	(A)	(A)	(A)	(A)	(A)	(A)	(A)	(A)	(A)	(A)	(A)	(A)	(A)
	OHL output shaft (B)	5586	5586	5586	5586	5586	5586	5586	5586	5586	5586	5586	5586	5586	5586	5586
	Output RPM	0.86	0.44	0.29	0.86	0.44	0.29	0.86	0.44	0.29	–	–	–	–	–	–
	Input Hp (max) (C)	0.36	0.18	0.12	0.36	0.18	0.12	0.36	0.18	0.12	–	–	–	–	–	–
4021.75	Output torque, in-lb	26568	26568	26568	26568	26568	26568	26568	26568	26568	–	–	–	–	–	–
	OHL input shaft	(A)	(A)	(A)	(A)	(A)	(A)	(A)	(A)	(A)	–	–	–	–	–	–
	OHL output shaft (B)	5586	5586	5586	5586	5586	5586	5586	5586	5586	–	–	–	–	–	–
	Output RPM	0.76	0.39	0.26	0.76	0.39	0.26	0.76	0.39	0.26	–	–	–	–	–	–
	Input Hp (max) (C)	0.32	0.16	0.11	0.32	0.16	0.11	0.32	0.16	0.11	–	–	–	–	–	–
4533.46	Output torque, in-lb	26568	26568	26568	26568	26568	26568	26568	26568	26568	–	–	–	–	–	–
	OHL input shaft	(A)	(A)	(A)	(A)	(A)	(A)	(A)	(A)	(A)	–	–	–	–	–	–
	OHL output shaft (B)	5586	5586	5586	5586	5586	5586	5586	5586	5586	–	–	–	–	–	–
	Output RPM	0.66	0.34	0.22	0.66	0.34	0.22	0.66	0.34	0.22	0.66	0.34	0.22	–	–	–
	Input Hp (max) (C)	0.28	0.14	0.09	0.28	0.14	0.09	0.28	0.14	0.09	0.28	0.14	0.09	–	–	–
5194.71	Output torque, in-lb	26568	26568	26568	26568	26568	26568	26568	26568	26568	26568	26568	26568	–	–	–
	OHL input shaft	(A)	(A)	(A)	(A)	(A)	(A)	(A)	(A)	(A)	(A)	(A)	(A)	–	–	–
	OHL output shaft (B)	5586	5586	5586	5586	5586	5586	5586	5586	5586	5586	5586	5586	–	–	–
	Output RPM	0.57	0.29	0.19	0.57	0.29	0.19	0.57	0.29	0.19	–	–	–	–	–	–
	Input Hp (max) (C)	0.24	0.12	0.08	0.24	0.12	0.08	0.24	0.12	0.08	–	–	–	–	–	–
6059.68	Output torque, in-lb	26568	26568	26568	26568	26568	26568	26568	26568	26568	–	–	–	–	–	–
	OHL input shaft	(A)	(A)	(A)	(A)	(A)	(A)	(A)	(A)	(A)	–	–	–	–	–	–
	OHL output shaft (B)	5586	5586	5586	5586	5586	5586	5586	5586	5586	–	–	–	–	–	–
	Output RPM	0.51	0.26	0.17	0.51	0.26	0.17	0.51	0.26	0.17	–	–	–	–	–	–
	Input Hp (max) (C)	0.21	0.11	0.07	0.21	0.11	0.07	0.21	0.11	0.07	–	–	–	–	–	–
6821.07	Output torque, in-lb	26568	26568	26568	26568	26568	26568	26568	26568	26568	–	–	–	–	–	–
	OHL input shaft	(A)	(A)	(A)	(A)	(A)	(A)	(A)	(A)	(A)	–	–	–	–	–	–
	OHL output shaft (B)	5586	5586	5586	5586	5586	5586	5586	5586	5586	–	–	–	–	–	–
	Output RPM	0.49	0.25	0.17	0.49	0.25	0.17	0.49	0.25	0.17	0.49	0.25	0.17	–	–	–
	Input Hp (max) (C)	0.21	0.11	0.07	0.21	0.11	0.07	0.21	0.11	0.07	0.21	0.11	0.07	–	–	–
6997.33	Output torque, in-lb	26568	26568	26568	26568	26568	26568	26568	26568	26568	26568	26568	26568	–	–	–
	OHL input shaft	(A)	(A)	(A)	(A)	(A)	(A)	(A)	(A)	(A)	(A)	(A)	(A)	–	–	–
	OHL output shaft (B)	5586	5586	5586	5586	5586	5586	5586	5586	5586	5586	5586	5586	–	–	–
	Output RPM	0.45	0.23	0.15	0.45	0.23	0.15	0.45	0.23	0.15	0.45	0.23	0.15	–	–	–
	Input Hp (max) (C)	0.19	0.10	0.06	0.19	0.10	0.06	0.19	0.10	0.06	0.19	0.10	0.06	–	–	–
7735.04	Output torque, in-lb	26568	26568	26568	26568	26568	26568	26568	26568	26568	26568	26568	26568	–	–	–
	OHL input shaft	(A)	(A)	(A)	(A)	(A)	(A)	(A)	(A)	(A)	(A)	(A)	(A)	–	–	–
	OHL output shaft (B)	5586	5586	5586	5586	5586	5586	5586	5586	5586	5586	5586	5586	–	–	–

Service factor: 1.0

(A) (B) (C) - See footnotes page on inside back cover

Blank areas (-) indicate configuration not available

RHB 128

Size: B_1283

Triple reduction – Clamp collar, three-piece coupled, separate

NEMA motor frame		140TC			180TC			—			210TC			250TC			280TC					320TC
IEC motor frame		90D			100D			112D			132D			160D			180D/200D					—
Separate group		90			100			112			132			160			180					—
Ratio	Output Rating data	3450	1750	1160	3450	1750	1160	3450	1750	1160	3450	1750	1160	3450	1750	1160	3450	1750	1160	3450	1750	1160
	Output RPM	–	–	–	–	–	–	–	–	–	486	**246**	163	486	**246**	163	486	**246**	163	486	246	163
	Input Hp (max) **(C)**	–	–	–	–	–	–	–	–	–	64.54	**32.76**	21.70	89.63	**45.49**	30.14	140.63	**92.65**	61.38	140.63	92.65	61.38
7.10	Output torque, in-lb	–	–	–	–	–	–	–	–	–	8374	**8378**	8373	11629	**11635**	11628	18245	**23697**	23683	18245	23697	23683
	OHL input shaft	–	–	–	–	–	–	–	–	–	**(A)**	**949**	989	**(A)**	**1473**	1586	**(A)**	**1534**	1955	(A)	1534	1955
	OHL output shaft **(B)**	–	–	–	–	–	–	–	–	–	**(A)**	**6907**	6907	**(A)**	**6907**	6907	**(A)**	**6907**	6907	(A)	6907	6907
	Output RPM	–	–	–	–	–	–	–	–	–	418	**212**	140	418	**212**	140	418	**212**	140	418	212	140
	Input Hp (max) **(C)**	–	–	–	–	–	–	–	–	–	64.54	**32.76**	21.70	89.64	**45.49**	30.14	127.06	**85.54**	57.44	127.06	85.54	57.44
8.26	Output torque, in-lb	–	–	–	–	–	–	–	–	–	9742	**9748**	9742	13529	**13537**	13529	19179	**25452**	25785	19179	25452	25785
	OHL input shaft	–	–	–	–	–	–	–	–	–	**(A)**	**948**	989	**(A)**	**1439**	1586	**(A)**	**1551**	1911	(A)	1551	1911
	OHL output shaft **(B)**	–	–	–	–	–	–	–	–	–	**(A)**	**6907**	6907	**(A)**	**6907**	6907	**(A)**	**6907**	6907	(A)	6907	6907
	Output RPM	–	–	–	–	–	–	377	**191**	127	377	**191**	127	377	**191**	127	377	**191**	127	377	191	127
	Input Hp (max) **(C)**	–	–	–	–	–	–	27.34	**13.87**	9.19	64.54	**32.76**	21.70	89.63	**45.49**	30.14	118.56	**78.21**	52.51	118.56	78.21	52.51
9.16	Output torque, in-lb	–	–	–	–	–	–	4574	**4576**	4574	10798	**10804**	10797	14995	**15003**	14995	19835	**25796**	26125	19835	35796	26125
	OHL input shaft	–	–	–	–	–	–	**(A)**	**838**	873	**(A)**	**943**	990	**(A)**	**1413**	1585	**(A)**	**1551**	1889	(A)	1551	1889
	OHL output shaft **(B)**	–	–	–	–	–	–	**(A)**	**6907**	6907	**(A)**	**6907**	6907	**(A)**	**6907**	6907	**(A)**	**6907**	6907	(A)	6907	6907
	Output RPM	–	–	–	317	**161**	107	317	**161**	107	317	**161**	107	317	**167**	107	317	**161**	107	317	161	107
	Input Hp (max) **(C)**	–	–	–	20.42	**10.42**	6.87	27.34	**13.95**	9.19	64.38	**32.94**	21.70	84.99	**45.75**	30.14	105.49	**67.60**	45.14	105.49	67.60	45.14
10.88	Output torque, in-lb	–	–	–	4059	**4061**	4059	5435	**5438**	5435	12798	**12838**	12830	16896	**17829**	17818	20970	**26345**	26690	20970	26345	26690
	OHL input shaft	–	–	–	**(A)**	**713**	742	**(A)**	**843**	869	**(A)**	**949**	988	**(A)**	**1360**	1583	**(A)**	**1579**	1924	(A)	1579	1924
	OHL output shaft **(B)**	–	–	–	**(A)**	**6907**	6907	**(A)**	**6907**	6907	**(A)**	**6907**	6907	**(A)**	**6907**	6907	**(A)**	**6907**	6907	(A)	6907	6907
	Output RPM	–	–	–	275	**139**	92	275	**139**	92	275	**139**	92	275	**139**	92	275	**139**	92	275	139	92
	Input Hp (max) **(C)**	–	–	–	20.42	**10.36**	6.87	27.34	**13.88**	9.19	62.19	**32.76**	21.70	79.92	**43.57**	28.97	95.70	**59.21**	39.75	95.70	59.21	39.75
12.56	Output torque, in-lb	–	–	–	4685	**4687**	4685	6273	**6276**	6273	14267	**14816**	14808	18336	**19709**	19765	21956	**26782**	27126	21956	26782	27126
	OHL input shaft	–	–	–	**(A)**	**713**	742	**(A)**	**843**	877	**(A)**	**951**	985	**(A)**	**1332**	1582	**(A)**	**1602**	1949	(A)	1602	1949
	OHL output shaft **(B)**	–	–	–	**(A)**	**6907**	6907	**(A)**	**6907**	6907	**(A)**	**6907**	6907	**(A)**	**6907**	6907	**(A)**	**6907**	6907	(A)	6907	6907
	Output RPM	–	–	–	–	–	–	–	–	–	265	**135**	89	265	**135**	89	265	**135**	89	265	135	89
	Input Hp (max) **(C)**	–	–	–	–	–	–	–	–	–	64.54	**32.76**	21.70	89.63	**45.49**	30.14	125.35	**75.26**	55.79	125.35	75.26	55.79
13.00	Output torque, in-lb	–	–	–	–	–	–	–	–	–	15329	**15338**	15329	21289	**21301**	21288	29772	**35237**	39410	29772	35237	39410
	OHL input shaft	–	–	–	–	–	–	–	–	–	**(A)**	**949**	989	**(A)**	**1473**	1586	**(A)**	**1700**	1969	(A)	1700	1969
	OHL output shaft **(B)**	–	–	–	–	–	–	–	–	–	**(A)**	**6907**	6907	**(A)**	**6907**	6907	**(A)**	**6907**	6907	(A)	6907	6907
	Output RPM	–	–	–	–	–	–	–	–	–	228	**116**	77	228	**116**	77	228	**116**	77	228	116	77
	Input Hp (max) **(C)**	–	–	–	–	–	–	–	–	–	64.54	**32.76**	21.70	89.63	**45.49**	30.14	112.74	**67.69**	48.49	112.74	67.69	48.49
15.13	Output torque, in-lb	–	–	–	–	–	–	–	–	–	17835	**17845**	17834	24768	**24782**	24767	31153	**36876**	39847	31153	36876	39847
	OHL input shaft	–	–	–	–	–	–	–	–	–	**(A)**	**948**	989	**(A)**	**1439**	1586	**(A)**	**1712**	2008	(A)	1712	2008
	OHL output shaft **(B)**	–	–	–	–	–	–	–	–	–	6907	**6907**	6907	6907	**6907**	6907	6907	**6907**	6907	6907	6907	6907
	Output RPM	–	–	–	–	–	–	206	**104**	69	206	**104**	69	206	**104**	69	206	**104**	69	206	104	69
	Input Hp (max) **(C)**	–	–	–	–	–	–	27.34	**13.85**	9.19	64.54	**32.76**	21.70	89.63	**45.49**	30.14	104.92	**62.99**	44.07	104.92	62.99	44.07
16.76	Output torque, in-lb	–	–	–	–	–	–	8373	**8360**	8373	19767	**19778**	19766	27451	**27467**	27450	32134	**38032**	40141	32134	38032	40141
	OHL input shaft	–	–	–	–	–	–	**(A)**	**838**	873	**(A)**	**943**	990	**(A)**	**1413**	1585	**(A)**	**1717**	2033	(A)	1717	2033
	OHL output shaft **(B)**	–	–	–	–	–	–	6907	**6907**	6907	6907	**6907**	6907	6907	**6907**	6907	6907	**6907**	6907	6907	6907	6907
	Output RPM	–	–	–	173	**88**	58	173	**88**	58	173	**88**	58	173	**88**	58	173	**88**	58	173	88	58
	Input Hp (max) **(C)**	–	–	–	20.42	**10.36**	6.87	27.34	**13.88**	9.19	64.38	**32.76**	21.70	84.99	**45.49**	30.14	92.98	**55.82**	37.56	92.98	55.82	37.56
19.92	Output torque, in-lb	–	–	–	7431	**7435**	7431	9950	**9956**	9950	23429	**23503**	23489	30931	**32639**	32620	33838	**40048**	40654	33838	40048	40654
	OHL input shaft	–	–	–	**(A)**	**713**	742	**(A)**	**843**	869	**(A)**	**949**	988	**(A)**	**1360**	1583	**(A)**	**1723**	2070	(A)	1723	2070
	OHL output shaft **(B)**	–	–	–	6907	**6907**	6907	6907	**6907**	6907	6907	**6907**	6907	6907	**6907**	6907	6907	**6907**	6907	6907	6907	6907
	Output RPM	–	–	–	151	**76**	51	151	**76**	51	151	**76**	51	151	**76**	51	151	**76**	51	151	76	51
	Input Hp (max) **(C)**	–	–	–	20.42	**10.39**	6.87	27.34	**13.92**	9.19	62.19	**32.86**	21.70	79.92	**43.71**	28.97	84.10	**49.11**	32.88	84.10	49.11	32.88
22.92	Output torque, in-lb	–	–	–	8576	**8581**	8576	11483	**11490**	11483	26119	**27124**	27108	33568	**36082**	36184	35324	**40539**	41076	35324	40539	41076
	OHL input shaft	–	–	–	**(A)**	**713**	742	**(A)**	**843**	877	**(A)**	**951**	985	**(A)**	**1332**	1582	**(A)**	**1745**	2094	(A)	1745	2094
	OHL output shaft **(B)**	–	–	–	6907	**6907**	6907	6907	**6907**	6907	6907	**6907**	6907	6907	**6907**	6907	6907	**6907**	6907	6907	6907	6907
	Output RPM	128	**65**	43	128	**65**	43	128	**65**	43	128	**65**	43	128	**65**	43	128	**65**	43	128	65	43
	Input Hp (max) **(C)**	9.86	**5.01**	3.32	20.42	**10.36**	6.87	27.34	**13.88**	9.19	59.33	**31.87**	21.45	74.14	**40.43**	26.87	75.14	**42.16**	28.32	75.14	42.16	28.32
27.02	Output torque, in-lb	4868	**4870**	4868	10077	**10083**	10077	13493	**13500**	13493	29280	**31010**	31485	36590	**39336**	39443	37081	**41016**	41564	37081	41016	41564
	OHL input shaft	**(A)**	**453**	471	**(A)**	**711**	740	**(A)**	**842**	877	**(A)**	**951**	991	**(A)**	**1266**	1581	**(A)**	**1768**	2116	(A)	1769	2116
	OHL output shaft **(B)**	6907	**6907**	6907	6907	**6907**	6907	6907	**6907**	6907	6907	**6907**	6907	6907	**6907**	6907	6907	**6907**	6907	6907	6907	6907

Service factor: 1.0

(A) (B) (C) - See footnotes page on inside back cover

Blank areas (-) indicate configuration not available

RHB 128

Size: B_1283

Triple reduction – Clamp collar, three-piece coupled, separate

NEMA motor frame		140TC			180TC			—			210TC			250TC			280TC					320TC
IEC motor frame		90D			100D			112D			132D			160D			180D/200D					—
Separate group		90			100			112			132			160			180					—
Ratio	Output Rating data	3450	1750	1160	3450	1750	1160	3450	1750	1160	3450	1750	1160	3450	1750	1160	3450	1750	1160	3450	1750	1160
	Output RPM	113	**57**	38	113	**57**	38	113	**57**	38	113	**57**	38	113	**57**	38	113	**57**	38	–	–	–
	Input Hp (max) **(C)**	9.86	**5.01**	3.32	20.42	**10.36**	6.87	27.34	**13.88**	9.19	56.88	**30.56**	20.57	68.84	**37.54**	25.01	68.84	**37.54**	25.01	–	–	–
30.61	Output torque, in-lb	5516	**5519**	5516	11419	**11426**	11419	15290	**15299**	15290	31813	**33693**	34214	38498	**41391**	41599	38498	**41391**	41600	–	–	–
	OHL input shaft	**(A)**	**454**	473	**(A)**	**708**	738	**(A)**	**839**	875	**(A)**	**935**	989	**(A)**	**1255**	1580	**(A)**	**1782**	2136	–	–	–
	OHL output shaft **(B)**	6907	**6907**	6907	6907	**6907**	6907	6907	**6907**	6907	6907	**6907**	6907	6907	**6907**	6907	6907	**6907**	6907	–	–	–
	Output RPM	96	**49**	32	96	**49**	32	96	**49**	32	96	**49**	32	96	**49**	32	96	**49**	32	–	–	–
	Input Hp (max) **(C)**	9.86	**5.01**	3.32	20.42	**10.36**	6.87	27.34	**13.88**	9.19	51.24	**28.80**	19.38	59.69	**32.17**	21.31	59.69	**32.17**	21.31	–	–	–
35.92	Output torque, in-lb	6473	**6477**	6473	13400	**13408**	13400	17942	**17953**	17942	33626	**37263**	37825	39173	**41623**	41599	39173	**41623**	41600	–	–	–
	OHL input shaft	**(A)**	**456**	470	**(A)**	**709**	739	**(A)**	**840**	874	**(A)**	**646**	986	**(A)**	**1271**	1587	**(A)**	**1802**	2159	–	–	–
	OHL output shaft **(B)**	6907	**6907**	6907	6907	**6907**	6907	6907	**6907**	6907	6907	**6907**	6907	6907	**6907**	6907	6907	**6907**	6907	–	–	–
	Output RPM	88	**45**	30	88	**45**	30	88	**45**	30	88	**45**	30	88	**45**	30	88	**45**	30	–	–	–
	Input Hp (max) **(C)**	9.86	**5.01**	3.32	20.42	**10.36**	6.87	27.18	**13.88**	9.19	47.70	**27.84**	18.74	54.34	**29.47**	19.54	54.34	**29.47**	19.54	–	–	–
39.19	Output torque, in-lb	7061	**7065**	7061	14618	**14627**	14618	19457	**19585**	19573	34151	**39300**	39901	38904	**41587**	41599	38904	**41587**	41600	–	–	–
	OHL input shaft	**(A)**	**456**	474	**(A)**	**712**	738	**(A)**	**755**	874	**(A)**	**480**	994	**(A)**	**1298**	1585	**(A)**	**1813**	2170	–	–	–
	OHL output shaft **(B)**	6907	**6907**	6907	6907	**6907**	6907	6907	**6907**	6907	6907	**6907**	6907	6907	**6907**	6907	6907	**6907**	6907	–	–	–
	Output RPM	–	–	–	–	–	–	–	–	–	83	**42**	28	83	**42**	28	83	**42**	28	–	–	–
	Input Hp (max) **(C)**	–	–	–	–	–	–	–	–	–	48.18	**27.93**	18.50	48.18	**27.93**	18.50	48.18	**27.93**	18.50	–	–	–
41.38	Output torque, in-lb	–	–	–	–	–	–	–	–	–	36425	**41623**	41600	36425	**41623**	41600	36425	**41623**	41600	–	–	–
	OHL input shaft	–	–	–	–	–	–	–	–	–	**(A)**	**953**	992	**(A)**	**1526**	1579	**(A)**	**2158**	2501	–	–	–
	OHL output shaft **(B)**	–	–	–	–	–	–	–	–	–	6907	**6907**	6907	6907	**6907**	6907	6907	**6907**	6907	–	–	–
	Output RPM	–	–	–	–	–	–	–	–	–	72	**36**	24	72	**36**	24	72	**36**	24	–	–	–
	Input Hp (max) **(C)**	–	–	–	–	–	–	–	–	–	43.34	**24.01**	15.90	43.34	**24.01**	15.90	43.43	**24.01**	15.90	–	–	–
48.14	Output torque, in-lb	–	–	–	–	–	–	–	–	–	38118	**41623**	41600	38118	**41623**	41600	38118	**41623**	41600	–	–	–
	OHL input shaft	–	–	–	–	–	–	–	–	–	**(A)**	**946**	986	**(A)**	**1524**	1588	**(A)**	**2174**	2502	–	–	–
	OHL output shaft **(B)**	–	–	–	–	–	–	–	–	–	6907	**6907**	6907	6907	**6907**	6907	6907	**6907**	6907	–	–	–
	Output RPM	–	–	–	–	–	–	65	**33**	22	65	**33**	22	65	**33**	22	65	**33**	22	–	–	–
	Input Hp (max) **(C)**	–	–	–	–	–	–	27.34	**13.88**	9.19	40.33	**21.66**	14.35	40.33	**21.66**	14.35	40.33	**21.66**	14.35	–	–	–
53.36	Output torque, in-lb	–	–	–	–	–	–	26650	**26665**	26650	39312	**41623**	41600	39312	**41623**	41600	39312	**41623**	41600	–	–	–
	OHL input shaft	–	–	–	–	–	–	**(A)**	**838**	873	**(A)**	**950**	989	**(A)**	**1527**	1590	**(A)**	**2183**	2502	–	–	–
	OHL output shaft **(B)**	–	–	–	–	–	–	6907	**6907**	6907	6907	**6907**	6907	6907	**6907**	6907	6907	**6907**	6907	–	–	–
	Output RPM	–	–	–	54	**28**	18	54	**28**	18	54	**28**	18	54	**28**	18	54	**28**	18	–	–	–
	Input Hp (max) **(C)**	–	–	–	20.42	**10.36**	6.87	27.34	**13.88**	9.19	35.11	**18.23**	12.08	35.11	**18.23**	12.08	35.11	**18.23**	12.08	–	–	–
63.41	Output torque, in-lb	–	–	–	23651	**23665**	23651	31669	**31686**	31669	40669	**41623**	41600	40669	**41623**	41600	40669	**41623**	41600	–	–	–
	OHL input shaft	–	–	–	**(A)**	**713**	742	**(A)**	**843**	869	**(A)**	**947**	987	**(A)**	**1531**	1594	**(A)**	**2198**	2503	–	–	–
	OHL output shaft **(B)**	–	–	–	6907	**6907**	6907	6907	**6907**	6907	6907	**6907**	6907	6907	**6907**	6907	6907	**6907**	6907	–	–	–
	Output RPM	–	–	–	47	**24**	16	47	**24**	16	47	**24**	16	47	**24**	16	47	**24**	16	–	–	–
	Input Hp (max) **(C)**	–	–	–	20.42	**10.36**	6.87	27.34	**13.88**	9.19	30.75	**15.79**	10.46	30.75	**15.79**	10.46	30.75	**15.79**	10.46	–	–	–
73.18	Output torque, in-lb	–	–	–	27296	**27311**	27296	36549	**36569**	36549	41104	**41623**	41600	41104	**41623**	41600	41104	**41623**	41600	–	–	–
	OHL input shaft	–	–	–	**(A)**	**713**	742	**(A)**	**843**	877	**(A)**	**952**	992	**(A)**	**1532**	1595	**(A)**	**2209**	2503	–	–	–
	OHL output shaft **(B)**	–	–	–	6907	**6907**	6907	6907	**6907**	6907	6907	**6907**	6907	6907	**6907**	6907	6907	**6907**	6907	–	–	–
	Output RPM	40	**20**	13	40	**20**	13	40	**20**	13	40	**20**	13	40	**20**	13	40	**20**	13	–	–	–
	Input Hp (max) **(C)**	9.86	**5.01**	3.32	20.42	**10.36**	6.87	26.48	**13.44**	8.90	26.48	**13.44**	8.90	26.48	**13.44**	8.90	26.48	**13.44**	8.90	–	–	–
85.98	Output torque, in-lb	15493	**15501**	15493	32073	**32091**	32073	41600	**41623**	41600	41600	**41623**	41600	41600	**41623**	41600	41600	**41623**	41600	–	–	–
	OHL input shaft	**(A)**	**453**	471	**(A)**	**711**	740	**(A)**	**842**	877	**(A)**	**955**	994	**(A)**	**1533**	1596	**(A)**	**2220**	2503	–	–	–
	OHL output shaft **(B)**	6907	**6907**	6907	6907	**6907**	6907	6907	**6907**	6907	6907	**6907**	6907	6907	**6907**	6907	6907	**6907**	6907	–	–	–
	Output RPM	35	**18**	12	35	**18**	12	35	**18**	12	35	**18**	12	35	**18**	12	35	**18**	12	–	–	–
	Input Hp (max) **(C)**	9.86	**5.01**	3.32	20.42	**10.36**	6.87	23.37	**11.86**	7.86	23.37	**11.86**	7.86	23.37	**11.86**	7.86	23.37	**11.86**	7.86	–	–	–
97.44	Output torque, in-lb	17556	**17566**	17556	36345	**36365**	36345	41600	**41623**	41600	41600	**41623**	41600	41600	**41623**	41600	41600	**41623**	41600	–	–	–
	OHL input shaft	**(A)**	**454**	473	**(A)**	**708**	738	**(A)**	**843**	878	**(A)**	**956**	996	**(A)**	**1534**	1596	**(A)**	**2227**	2503	–	–	–
	OHL output shaft **(B)**	6907	**6907**	6907	6907	**6907**	6907	6907	**6907**	6907	6907	**6907**	6907	6907	**6907**	6907	6907	**6907**	6907	–	–	–
	Output RPM	30	**15**	10	30	**15**	10	30	**15**	10	30	**15**	10	30	**15**	10	30	**15**	10	–	–	–
	Input Hp (max) **(C)**	9.86	**5.01**	3.32	19.92	**10.11**	6.70	19.92	**10.11**	6.70	19.92	**10.11**	6.70	19.92	**10.11**	6.70	19.92	**10.11**	6.70	–	–	–
114.34	Output torque, in-lb	20602	**20614**	20602	41600	**41623**	41600	41600	**41623**	41600	41600	**41623**	41600	41600	**41623**	41600	41600	**41623**	41600	–	–	–
	OHL input shaft	(A)	**456**	470	(A)	**710**	740	(A)	**844**	878	(A)	**958**	997	(A)	**1534**	1597	(A)	**2234**	2480	–	–	–
	OHL output shaft **(B)**	6907	**6907**	6907	6907	**6907**	6907	6907	**6907**	6907	6907	**6907**	6907	6907	**6907**	6907	6907	**6907**	6907	–	–	–

Service factor: 1.0

(A) (B) (C) - See footnotes page on inside back cover

Blank areas (-) indicate configuration not available

RHB 128

Size: B_1283

Triple reduction – Clamp collar, three-piece coupled, separate

NEMA motor frame		140TC			180TC			—			210TC			250TC			280TC					320TC
IEC motor frame		90D			100D			112D			132D			160D			180D/200D					—
Separate group		90			100			112			132			160			180					—
Ratio	Output Rating data	3450	1750	1160	3450	1750	1160	3450	1750	1160	3450	1750	1160	3450	1750	1160	3450	1750	1160	3450	1750	1160
	Output RPM	28	14	9	28	14	9	28	14	9	28	14	9	28	14	9	28	14	9	–	–	–
	Input Hp (max) (C)	9.86	5.01	3.32	18.26	9.27	6.14	18.26	9.27	6.14	18.26	9.27	6.14	18.26	9.27	6.14	18.26	9.27	6.14	–	–	–
124.74	Output torque, in-lb	22475	22488	22475	41600	41623	41600	41600	41623	41600	41600	41623	41600	41600	41623	41600	41600	41623	41600	–	–	–
	OHL input shaft	(A)	456	474	(A)	706	736	(A)	836	871	(A)	958	997	(A)	1534	1597	(A)	2238	2481	–	–	–
	OHL output shaft (B)	6907	6907	6907	6907	6907	6907	6907	6907	6907	6907	6907	6907	6907	6907	6907	6907	6907	6907	–	–	–
	Output RPM	25	13	9	25	13	9	25	13	9	25	13	9	25	13	9	25	13	9	–	–	–
	Input Hp (max) (C)	9.86	5.01	3.32	16.74	8.49	5.63	16.74	8.49	5.63	16.74	8.49	5.63	16.74	8.49	5.63	16.74	8.49	5.63	–	–	–
136.07	Output torque, in-lb	24516	24530	24516	41600	41623	41600	41600	41623	41600	41600	41623	41600	41600	41623	41600	41600	41623	41600	–	–	–
	OHL input shaft	(A)	456	475	(A)	708	738	(A)	838	873	(A)	958	997	(A)	1534	1597	(A)	2241	2485	–	–	–
	OHL output shaft (B)	6907	6907	6907	6907	6907	6907	6907	6907	6907	6907	6907	6907	6907	6907	6907	6907	6907	6907	–	–	–
	Output RPM	23	12	8	23	12	8	23	12	8	23	12	8	23	12	8	23	12	8	–	–	–
	Input Hp (max) (C)	9.86	5.01	3.32	15.51	7.87	5.21	15.51	7.87	5.21	15.51	7.87	5.21	15.51	7.87	5.21	15.51	7.87	5.21	–	–	–
146.84	Output torque, in-lb	26457	26472	26456	41600	41623	41600	41600	41623	41600	41600	41623	41600	41600	41623	41600	41600	41623	41600	–	–	–
	OHL input shaft	(A)	455	475	(A)	710	740	(A)	839	871	(A)	958	998	(A)	1534	1597	(A)	2240	2489	–	–	–
	OHL output shaft (B)	6907	6907	6907	6907	6907	6907	6907	6907	6907	6907	6907	6907	6907	6907	6907	6907	6907	6907	–	–	–
	Output RPM	21	11	7	21	11	7	21	11	7	21	11	7	21	11	7	–	–	–	–	–	–
	Input Hp (max) (C)	9.86	5.01	3.32	13.88	7.04	4.67	13.88	7.04	4.67	13.88	7.04	4.67	13.88	7.04	4.67	–	–	–	–	–	–
164.11	Output torque, in-lb	29570	29587	29569	41600	41623	41600	41600	41623	41600	41600	41623	41600	41600	41623	41600	–	–	–	–	–	–
	OHL input shaft	(A)	454	475	(A)	711	741	(A)	838	873	(A)	959	998	(A)	1534	1597	–	–	–	–	–	–
	OHL output shaft (B)	6907	6907	6907	6907	6907	6907	6907	6907	6907	6907	6907	6907	6907	6907	6907	–	–	–	–	–	–
	Output RPM	20	10	7	20	10	7	20	10	7	20	10	7	20	10	7	–	–	–	–	–	–
	Input Hp (max) (C)	9.59	5.01	3.32	12.95	6.57	4.36	12.95	6.57	4.36	12.95	6.57	4.36	12.95	6.57	4.36	–	–	–	–	–	–
175.80	Output torque, in-lb	30812	31693	31675	41600	41623	41600	41600	41623	41600	41600	41623	41600	41600	41623	41600	–	–	–	–	–	–
	OHL input shaft	(A)	452	475	(A)	712	741	(A)	839	874	(A)	959	998	(A)	1534	1597	–	–	–	–	–	–
	OHL output shaft (B)	6907	6907	6907	6907	6907	6907	6907	6907	6907	6907	6907	6907	6907	6907	6907	–	–	–	–	–	–
	Output RPM	18	9	6	18	9	6	18	9	6	18	9	6	–	–	–	–	–	–	–	–	–
	Input Hp (max) (C)	9.22	4.82	3.32	12.05	6.11	4.05	12.05	6.11	4.05	12.05	6.11	4.05	–	–	–	–	–	–	–	–	–
189.04	Output torque, in-lb	31846	32784	34061	41600	41623	41600	41600	41623	41600	41600	41623	41600	–	–	–	–	–	–	–	–	–
	OHL input shaft	(A)	452	474	(A)	713	742	(A)	840	875	(A)	959	998	–	–	–	–	–	–	–	–	–
	OHL output shaft (B)	6907	6907	6907	6907	6907	6907	6907	6907	6907	6907	6907	6907	–	–	–	–	–	–	–	–	–
	Output RPM	17	9	6	17	9	6	17	9	6	17	9	6	–	–	–	–	–	–	–	–	–
	Input Hp (max) (C)	8.83	4.61	3.19	11.15	5.66	3.75	11.15	5.66	3.75	11.15	5.66	3.75	–	–	–	–	–	–	–	–	–
204.18	Output torque, in-lb	32937	33915	35335	41600	41623	41600	41600	41623	41600	41600	41623	41600	–	–	–	–	–	–	–	–	–
	OHL input shaft	(A)	452	474	(A)	713	742	(A)	842	876	(A)	959	998	–	–	–	–	–	–	–	–	–
	OHL output shaft (B)	6907	6907	6907	6907	6907	6907	6907	6907	6907	6907	6907	6907	–	–	–	–	–	–	–	–	–
	Output RPM	16	8	5	16	8	5	16	8	5	16	8	5	–	–	–	–	–	–	–	–	–
	Input Hp (max) (C)	8.43	4.40	3.04	10.27	5.21	3.45	10.27	5.21	3.45	10.27	5.21	3.45	–	–	–	–	–	–	–	–	–
221.64	Output torque, in-lb	34116	35135	36606	41600	41623	41600	41600	41623	41600	41600	41623	41600	–	–	–	–	–	–	–	–	–
	OHL input shaft	(A)	454	474	(A)	714	743	(A)	842	877	(A)	959	998	–	–	–	–	–	–	–	–	–
	OHL output shaft (B)	6907	6907	6907	6907	6907	6907	6907	6907	6907	6907	6907	6907	–	–	–	–	–	–	–	–	–
	Output RPM	14	7	5	14	7	5	14	7	5	14	7	5	–	–	–	–	–	–	–	–	–
	Input Hp (max) (C)	8.01	4.18	2.89	9.41	4.78	3.16	9.41	4.78	3.16	9.41	4.78	3.16	–	–	–	–	–	–	–	–	–
242.02	Output torque, in-lb	35412	36473	38002	41600	41623	41600	41600	41623	41600	41600	41623	41600	–	–	–	–	–	–	–	–	–
	OHL input shaft	(A)	454	474	(A)	714	743	(A)	843	877	(A)	959	998	–	–	–	–	–	–	–	–	–
	OHL output shaft (B)	6907	6907	6907	6907	6907	6907	6907	6907	6907	6907	6907	6907	–	–	–	–	–	–	–	–	–
	Output RPM	13	6	4	13	6	4	13	6	4	–	–	–	–	–	–	–	–	–	–	–	–
	Input Hp (max) (C)	7.51	3.93	2.71	8.41	4.27	2.83	8.41	4.27	2.83	–	–	–	–	–	–	–	–	–	–	–	–
270.90	Output torque, in-lb	37182	38299	39910	41600	41623	41600	41600	41623	41600	–	–	–	–	–	–	–	–	–	–	–	–
	OHL input shaft	(A)	453	474	(A)	714	743	(A)	843	878	–	–	–	–	–	–	–	–	–	–	–	–
	OHL output shaft (B)	6907	6907	6907	6907	6907	6907	6907	6907	6907	–	–	–	–	–	–	–	–	–	–	–	–
	Output RPM	12	6	4	12	6	4	12	6	4	–	–	–	–	–	–	–	–	–	–	–	–
	Input Hp (max) (C)	7.16	3.74	2.58	7.71	3.91	2.59	7.71	3.91	2.59	–	–	–	–	–	–	–	–	–	–	–	–
295.38	Output torque, in-lb	38646	39802	41473	41600	41623	41600	41600	41623	41600	–	–	–	–	–	–	–	–	–	–	–	–
	OHL input shaft	(A)	453	474	(A)	714	743	(A)	844	878	–	–	–	–	–	–	–	–	–	–	–	–
	OHL output shaft (B)	6907	6907	6907	6907	6907	6907	6907	6907	6907	–	–	–	–	–	–	–	–	–	–	–	–

Service factor: 1.0

(A) (B) (C) - See footnotes page on inside back cover

Blank areas (-) indicate configuration not available

RHB 128

Size: B_1284

Four-stage reduction – Clamp collar, three-piece coupled, separate

NEMA motor frame		56C			—			140TC			180TC			—		
IEC motor frame		71D			80D			90D			100D			112D		
Separate group		71			80			90			100			112		
Ratio	Output **Rating data**	3450	1750	1160	3450	1750	1160	3450	1750	1160	3450	1750	1160	3450	1750	1160
	Output RPM	11.48	**5.82**	3.86	11.48	**5.82**	3.86	11.48	**5.82**	3.86	11.48	**5.82**	3.86	11.48	**5.82**	3.86
	Input Hp (max) **(C)**	3.98	**2.02**	1.34	4.85	**2.46**	1.53	7.58	**3.84**	2.55	7.58	**3.84**	2.55	7.58	**3.84**	2.55
300.60	Output torque, in-lb	21856	**21868**	21885	26633	**26632**	24988	41623	**41623**	41623	41623	**41623**	41623	41623	**41623**	41623
	OHL input shaft	(A)	**(A)**	(A)	**(A)**	**(A)**	(A)	**(A)**	**(A)**	(A)	**(A)**	**(A)**	(A)	**(A)**	**(A)**	(A)
	OHL output shaft **(B)**	6907	**6907**	6907	**6907**	**6907**	6907	**6907**	**6907**	6907	**6907**	**6907**	6907	**6907**	**6907**	6907
	Output RPM	9.95	**5.04**	3.34	9.95	**5.04**	3.34	9.95	**5.04**	3.34	9.95	**5.04**	3.34	9.95	**5.04**	3.34
	Input Hp (max) **(C)**	3.98	**2.02**	1.34	4.85	**2.46**	1.53	6.57	**3.33**	2.21	6.57	**3.33**	2.21	6.57	**3.33**	2.21
346.89	Output torque, in-lb	25221	**25236**	25255	30734	**30732**	28836	41623	**41623**	41623	41623	**41623**	41623	41623	**41623**	41623
	OHL input shaft	(A)	**(A)**	(A)	**(A)**	**(A)**	(A)	**(A)**	**(A)**	(A)	**(A)**	**(A)**	(A)	**(A)**	**(A)**	(A)
	OHL output shaft **(B)**	6907	**6907**	6907	**6907**	**6907**	6907	**6907**	**6907**	6907	**6907**	**6907**	6907	**6907**	**6907**	6907
	Output RPM	9.15	**4.64**	3.08	9.15	**4.64**	3.08	9.15	**4.64**	3.08	9.15	**4.64**	3.08	9.15	**4.64**	3.08
	Input Hp (max) **(C)**	3.98	**2.02**	1.34	4.85	**2.46**	1.53	6.04	**3.06**	2.03	6.04	**3.06**	2.03	6.04	**3.06**	2.03
377.09	Output torque, in-lb	27417	**27433**	27454	33411	**33409**	31347	41623	**41623**	41623	41623	**41623**	41623	41623	**41623**	41623
	OHL input shaft	(A)	**(A)**	(A)	**(A)**	**(A)**	(A)	**(A)**	**(A)**	(A)	**(A)**	**(A)**	(A)	**(A)**	**(A)**	(A)
	OHL output shaft **(B)**	6907	**6907**	6907	**6907**	**6907**	6907	**6907**	**6907**	6907	**6907**	**6907**	6907	**6907**	**6907**	6907
	Output RPM	7.96	**4.04**	2.68	7.96	**4.04**	2.68	7.96	**4.04**	2.68	7.96	**4.04**	2.68	7.96	**4.04**	2.68
	Input Hp (max) **(C)**	3.98	**2.02**	1.34	4.85	**2.46**	1.53	5.26	**2.67**	1.77	5.26	**2.67**	1.77	5.26	**2.67**	1.77
433.18	Output torque, in-lb	31495	**31513**	31537	38380	**38377**	36009	41623	**41623**	41623	41623	**41623**	41623	41623	**41623**	41623
	OHL input shaft	**(A)**	**(A)**	(A)	**(A)**	**(A)**	(A)	**(A)**	**(A)**	(A)	**(A)**	**(A)**	(A)	**(A)**	**(A)**	(A)
	OHL output shaft **(B)**	6907	**6907**	6907	6907	**6907**	6907	6907	**6907**	6907	6907	**6907**	6907	6907	**6907**	6907
	Output RPM	6.76	**3.43**	2.27	6.76	**3.43**	2.27	6.76	**3.43**	2.27	6.76	**3.43**	2.27	6.76	**3.43**	2.27
	Input Hp (max) **(C)**	3.98	**2.02**	1.34	4.46	**2.26**	1.50	4.46	**2.26**	1.50	4.46	**2.26**	1.50	4.46	**2.26**	1.50
510.41	Output torque, in-lb	37110	**37132**	37160	41623	**41623**	41623	41623	**41623**	41623	41623	**41623**	41623	41623	**41623**	41623
	OHL input shaft	**(A)**	**(A)**	(A)	**(A)**	**(A)**	(A)	**(A)**	**(A)**	(A)	**(A)**	**(A)**	(A)	**(A)**	**(A)**	(A)
	OHL output shaft **(B)**	6907	**6907**	6907	6907	**6907**	6907	6907	**6907**	6907	6907	**6907**	6907	6907	**6907**	6907
	Output RPM	6.02	**3.06**	2.03	6.02	**3.06**	2.03	6.02	**3.06**	2.03	6.02	**3.06**	2.03	6.02	**3.06**	2.03
	Input Hp (max) **(C)**	3.98	**2.02**	1.34	3.98	**2.02**	1.34	3.98	**2.02**	1.34	3.98	**2.02**	1.34	3.98	**2.02**	1.34
572.81	Output torque, in-lb	41623	**41623**	41623	41623	**41623**	41623	41623	**41623**	41623	41623	**41623**	41623	41623	**41623**	41623
	OHL input shaft	**(A)**	**(A)**	(A)	**(A)**	**(A)**	(A)	**(A)**	**(A)**	(A)	**(A)**	**(A)**	(A)	**(A)**	**(A)**	(A)
	OHL output shaft **(B)**	6907	**6907**	6907	6907	**6907**	6907	6907	**6907**	6907	6907	**6907**	6907	6907	**6907**	6907
	Output RPM	5.28	**2.68**	1.78	5.28	**2.68**	1.78	5.28	**2.68**	1.78	5.28	**2.68**	1.78	5.28	**2.68**	1.78
	Input Hp (max) **(C)**	3.49	**1.77**	1.17	3.49	**1.77**	1.17	3.49	**1.77**	1.17	3.49	**1.77**	1.17	3.49	**1.77**	1.17
653.45	Output torque, in-lb	41623	**41623**	41623	41623	**41623**	41623	41623	**41623**	41623	41623	**41623**	41623	41623	**41623**	41623
	OHL input shaft	(A)	**(A)**	(A)	**(A)**	**(A)**	(A)	**(A)**	**(A)**	(A)	**(A)**	**(A)**	(A)	**(A)**	**(A)**	(A)
	OHL output shaft **(B)**	6907	**6907**	6907	6907	**6907**	6907	6907	**6907**	6907	6907	**6907**	6907	6907	**6907**	6907
	Output RPM	4.66	**2.36**	1.57	4.66	**2.36**	1.57	4.66	**2.36**	1.57	4.66	**2.36**	1.57	4.66	**2.36**	1.57
	Input Hp (max) **(C)**	3.08	**1.56**	1.04	3.08	**1.56**	1.04	3.08	**1.56**	1.04	3.08	**1.56**	1.04	3.08	**1.56**	1.04
740.12	Output torque, in-lb	41623	**41623**	41623	41623	**41623**	41623	41623	**41623**	41623	41623	**41623**	41623	41623	**41623**	41623
	OHL input shaft	(A)	**(A)**	(A)	**(A)**	**(A)**	(A)	**(A)**	**(A)**	(A)	**(A)**	**(A)**	(A)	**(A)**	**(A)**	(A)
	OHL output shaft **(B)**	6907	**6907**	6907	6907	**6907**	6907	6907	**6907**	6907	6907	**6907**	6907	6907	**6907**	6907
	Output RPM	4.02	**2.04**	1.35	4.02	**2.04**	1.35	4.02	**2.04**	1.35	4.02	**2.04**	1.35	4.02	**2.04**	1.35
	Input Hp (max) **(C)**	2.66	**1.35**	0.89	2.66	**1.35**	0.89	2.66	**1.35**	0.89	2.66	**1.35**	0.89	2.66	**1.35**	0.89
857.75	Output torque, in-lb	41623	**41623**	41623	41623	**41623**	41623	41623	**41623**	41623	41623	**41623**	41623	41623	**41623**	41623
	OHL input shaft	(A)	**(A)**	(A)	**(A)**	**(A)**	(A)	**(A)**	**(A)**	(A)	**(A)**	**(A)**	(A)	**(A)**	**(A)**	(A)
	OHL output shaft **(B)**	6907	**6907**	6907	6907	**6907**	6907	6907	**6907**	6907	6907	**6907**	6907	6907	**6907**	6907
	Output RPM	3.62	**1.84**	1.22	3.62	**1.84**	1.22	3.62	**1.84**	1.22	3.62	**1.84**	1.22	–	–	–
	Input Hp (max) **(C)**	2.39	**1.21**	0.80	2.39	**1.21**	0.80	2.39	**1.21**	0.80	2.39	**1.21**	0.80	–	–	–
952.42	Output Torque, In–Lb	41623	**41623**	41623	41623	**41623**	41623	41623	**41623**	41623	41623	**41623**	41623	–	–	–
	OHL input shaft	(A)	**(A)**	(A)	(A)	**(A)**	(A)	(A)	**(A)**	(A)	(A)	**(A)**	(A)	–	–	–
	OHL output shaft **(B)**	6907	**6907**	6907	6907	**6907**	6907	6907	**6907**	6907	6907	**6907**	6907	–	–	–
	Output RPM	3.12	**1.58**	1.05	3.12	**1.58**	1.05	3.12	**1.58**	1.05	3.12	**1.58**	1.05	3.12	**1.58**	1.05
	Input Hp (max) **(C)**	2.06	**1.05**	0.69	2.06	**1.05**	0.69	2.06	**1.05**	0.69	2.06	**1.05**	0.69	2.06	**1.05**	0.69
1105.88	Output torque, in-lb	41623	**41623**	41623	41623	**41623**	41623	41623	**41623**	41623	41623	**41623**	41623	41623	**41623**	41623
	OHL input shaft	(A)	**(A)**	(A)	(A)	**(A)**	(A)	(A)	**(A)**	(A)	(A)	**(A)**	(A)	(A)	**(A)**	(A)
	OHL output shaft **(B)**	6907	**6907**	6907	6907	**6907**	6907	6907	**6907**	6907	6907	**6907**	6907	6907	**6907**	6907

Service factor: 1.0

(A) (B) (C) - See footnotes page on inside back cover

Blank areas (-) indicate configuration not available

RHB 128

Size: B_1284

Four-stage reduction – Clamp collar, three-piece coupled, separate

NEMA motor frame		56C			—			140TC			180TC			—		
IEC motor frame		71D			80D			90D			100D			112D		
Separate group		71			80			90			100			112		
Ratio	Output **Rating data**	3450	1750	1160	3450	1750	1160	3450	1750	1160	3450	1750	1160	3450	1750	1160
	Output RPM	2.77	**1.40**	0.93	2.77	**1.40**	0.93	2.77	**1.40**	0.93	–	–	–	–	–	–
	Input Hp (max) **(C)**	1.83	**0.93**	0.61	1.83	**0.93**	0.61	1.83	**0.93**	0.61	–	–	–	–	–	–
1247.30	Output torque, in-lb	41623	**41623**	41623	41623	**41623**	41623	41623	**41623**	41623	–	–	–	–	–	–
	OHL input shaft	(A)	**(A)**	(A)	(A)	**(A)**	(A)	(A)	**(A)**	(A)	–	–	–	–	–	–
	OHL output shaft **(B)**	6907	**6907**	6907	6907	**6907**	6907	6907	**6907**	6907	–	–	–	–	–	–
	Output RPM	2.41	**1.22**	0.81	2.41	**1.22**	0.81	2.41	**1.22**	0.81	2.41	**1.22**	0.81	–	–	–
	Input Hp (max) **(C)**	1.59	**0.81**	0.54	1.59	**0.81**	0.54	1.59	**0.81**	0.54	1.59	**0.81**	0.54	–	–	–
1429.26	Output torque, in-lb	41623	**41623**	41623	41623	**41623**	41623	41623	**41623**	41623	41623	**41623**	41623	–	–	–
	OHL input shaft	(A)	**(A)**	(A)	(A)	**(A)**	(A)	(A)	**(A)**	(A)	(A)	**(A)**	(A)	–	–	–
	OHL output shaft **(B)**	6907	**6907**	6907	6907	**6907**	6907	6907	**6907**	6907	6907	**6907**	6907	–	–	–
	Output RPM	2.10	**1.07**	0.71	2.10	**1.07**	0.71	2.10	**1.07**	0.71	–	–	–	–	–	–
	Input Hp (max) **(C)**	1.39	**0.70**	0.47	1.39	**0.70**	0.47	1.39	**0.70**	0.47	–	–	–	–	–	–
1641.10	Output torque, in-lb	41623	**41623**	41623	41623	**41623**	41623	41623	**41623**	41623	–	–	–	–	–	–
	OHL input shaft	(A)	**(A)**	(A)	(A)	**(A)**	(A)	(A)	**(A)**	(A)	–	–	–	–	–	–
	OHL output shaft **(B)**	6907	**6907**	6907	6907	**6907**	6907	6907	**6907**	6907	–	–	–	–	–	–
	Output RPM	1.86	**0.94**	0.63	1.86	**0.94**	0.63	1.86	**0.94**	0.63	–	–	–	–	–	–
	Input Hp (max) **(C)**	1.23	**0.62**	0.41	1.23	**0.62**	0.41	1.23	**0.62**	0.41	–	–	–	–	–	–
1856.00	Output torque, in-lb	41623	**41623**	41623	41623	**41623**	41623	41623	**41623**	41623	–	–	–	–	–	–
	OHL input shaft	(A)	**(A)**	(A)	(A)	**(A)**	(A)	(A)	**(A)**	(A)	–	–	–	–	–	–
	OHL output shaft **(B)**	6907	**6907**	6907	6907	**6907**	6907	6907	**6907**	6907	–	–	–	–	–	–
	Output RPM	1.62	**0.82**	0.54	1.62	**0.82**	0.54	–	–	–	–	–	–	–	–	–
	Input Hp (max) **(C)**	1.07	**0.54**	0.36	1.07	**0.54**	0.36	–	–	–	–	–	–	–	–	–
2136.15	Output torque, in-lb	41623	**41623**	41623	41623	**41623**	41623	–	–	–	–	–	–	–	–	–
	OHL input shaft	(A)	**(A)**	(A)	(A)	**(A)**	(A)	–	–	–	–	–	–	–	–	–
	OHL output shaft **(B)**	6907	**6907**	6907	6907	**6907**	6907	–	–	–	–	–	–	–	–	–
	Output RPM	1.43	**0.72**	0.48	1.43	**0.72**	0.48	1.43	**0.72**	0.48	–	–	–	–	–	–
	Input Hp (max) **(C)**	0.94	**0.48**	0.32	0.94	**0.48**	0.32	0.94	**0.48**	0.32	–	–	–	–	–	–
2420.20	Output torque, in-lb	41623	**41623**	41623	41623	**41623**	41623	41623	**41623**	41623	–	–	–	–	–	–
	OHL input shaft	(A)	**(A)**	(A)	(A)	**(A)**	(A)	(A)	**(A)**	(A)	–	–	–	–	–	–
	OHL output shaft **(B)**	6907	**6907**	6907	6907	**6907**	6907	6907	**6907**	6907	–	–	–	–	–	–
	Output RPM	1.26	**0.64**	0.42	1.26	**0.64**	0.42	–	–	–	–	–	–	–	–	–
	Input Hp (max) **(C)**	0.83	**0.42**	0.28	0.83	**0.42**	0.28	–	–	–	–	–	–	–	–	–
2734.83	Output torque, in-lb	41623	**41623**	41623	41623	**41623**	41623	–	–	–	–	–	–	–	–	–
	OHL input shaft	(A)	**(A)**	(A)	(A)	**(A)**	(A)	–	–	–	–	–	–	–	–	–
	OHL output shaft **(B)**	6907	**6907**	6907	6907	**6907**	6907	–	–	–	–	–	–	–	–	–

Service factor: 1.0

(A) (B) (C) - See footnotes page on inside back cover

Blank areas (-) indicate configuration not available

RHB 128

Size: B_1285

Five-stage reduction – Clamp collar, three-piece coupled, separate

NEMA motor frame		56C			—			140TC			180TC			—		
IEC motor frame		71D			80D			90D			100D			112D		
Separate group		71			80			90			100			112		
Ratio	Output **Rating data**	3450	1750	1160	3450	1750	1160	3450	1750	1160	3450	1750	1160	3450	1750	1160
	Output RPM	1.24	**0.63**	0.42	1.24	**0.63**	0.42	1.24	**0.63**	0.42	1.24	**0.63**	0.42	1.24	**0.63**	0.42
	Input Hp (max) **(C)**	0.82	**0.42**	0.28	0.82	**0.42**	0.28	0.82	**0.42**	0.28	0.82	**0.42**	0.28	0.82	**0.42**	0.28
2775.11	Output torque, in-lb	41623	**41623**	41623	41623	**41623**	41623	41623	**41623**	41623	41623	**41623**	41623	41623	**41623**	41623
	OHL input shaft	(A)	**(A)**	(A)	**(A)**	**(A)**	(A)	**(A)**	**(A)**	(A)	**(A)**	**(A)**	(A)	**(A)**	**(A)**	(A)
	OHL output shaft **(B)**	6907	**6907**	6907	**6907**	**6907**	6907	**6907**	**6907**	6907	**6907**	**6907**	6907	**6907**	**6907**	6907
	Output RPM	1.12	**0.57**	0.38	1.12	**0.57**	0.38	1.12	**0.57**	0.38	1.12	**0.57**	0.38	1.12	**0.57**	0.38
	Input Hp (max) **(C)**	0.74	**0.37**	0.25	0.74	**0.37**	0.25	0.74	**0.37**	0.25	0.74	**0.37**	0.25	0.74	**0.37**	0.25
3085.29	Output torque, in-lb	41623	**41623**	41623	41623	**41623**	41623	41623	**41623**	41623	41623	**41623**	41623	41623	**41623**	41623
	OHL input shaft	(A)	**(A)**	(A)	**(A)**	**(A)**	(A)	**(A)**	**(A)**	(A)	**(A)**	**(A)**	(A)	**(A)**	**(A)**	(A)
	OHL output shaft **(B)**	6907	**6907**	6907	**6907**	**6907**	6907	**6907**	**6907**	6907	**6907**	**6907**	6907	**6907**	**6907**	6907
	Output RPM	0.96	**0.49**	0.32	0.96	**0.49**	0.32	0.96	**0.49**	0.32	0.96	**0.49**	0.32	0.96	**0.49**	0.32
	Input Hp (max) **(C)**	0.64	**0.32**	0.21	0.64	**0.32**	0.21	0.64	**0.32**	0.21	0.64	**0.32**	0.21	0.64	**0.32**	0.21
3583.92	Output torque, in-lb	41623	**41623**	41623	41623	**41623**	41623	41623	**41623**	41623	41623	**41623**	41623	41623	**41623**	41623
	OHL input shaft	(A)	**(A)**	(A)	**(A)**	**(A)**	(A)	**(A)**	**(A)**	(A)	**(A)**	**(A)**	(A)	**(A)**	**(A)**	(A)
	OHL output shaft **(B)**	6907	**6907**	6907	**6907**	**6907**	6907	**6907**	**6907**	6907	**6907**	**6907**	6907	**6907**	**6907**	6907
	Output RPM	0.85	**0.43**	0.29	0.85	**0.43**	0.29	0.85	**0.43**	0.29	0.85	**0.43**	0.29	–	–	–
	Input Hp (max) **(C)**	0.56	**0.28**	0.19	0.56	**0.28**	0.19	0.56	**0.28**	0.19	0.56	**0.28**	0.19	–	–	–
4055.71	Output torque, in-lb	41623	**41623**	41623	41623	**41623**	41623	41623	**41623**	41623	41623	**41623**	41623	–	–	–
	OHL input shaft	**(A)**	**(A)**	(A)	**(A)**	**(A)**	(A)	**(A)**	**(A)**	(A)	**(A)**	**(A)**	(A)	–	–	–
	OHL output shaft **(B)**	6907	**6907**	6907	6907	**6907**	6907	6907	**6907**	6907	6907	**6907**	6907	–	–	–
	Output RPM	0.74	**0.38**	0.25	0.74	**0.38**	0.25	0.74	**0.38**	0.25	0.74	**0.38**	0.25	–	–	–
	Input Hp (max) **(C)**	0.49	**0.25**	0.16	0.49	**0.25**	0.16	0.49	**0.25**	0.16	0.49	**0.25**	0.16	–	–	–
4665.11	Output torque, in-lb	41623	**41623**	41623	41623	**41623**	41623	41623	**41623**	41623	41623	**41623**	41623	–	–	–
	OHL input shaft	(A)	(A)	(A)	**(A)**	**(A)**	(A)	**(A)**	**(A)**	(A)	**(A)**	**(A)**	(A)	–	–	–
	OHL output shaft **(B)**	6907	**6907**	6907	6907	**6907**	6907	6907	**6907**	6907	6907	**6907**	6907	–	–	–
	Output RPM	0.64	**0.32**	0.21	0.64	**0.32**	0.21	0.64	**0.32**	0.21	0.64	**0.32**	0.21	–	–	–
	Input Hp (max) **(C)**	0.42	**0.21**	0.14	0.42	**0.21**	0.14	0.42	**0.21**	0.14	0.42	**0.21**	0.14	–	–	–
5416.90	Output torque, in-lb	41623	**41623**	41623	41623	**41623**	41623	41623	**41623**	41623	41623	**41623**	41623	–	–	–
	OHL input shaft	**(A)**	**(A)**	(A)	**(A)**	**(A)**	(A)	**(A)**	**(A)**	(A)	**(A)**	**(A)**	(A)	–	–	–
	OHL output shaft **(B)**	6907	**6907**	6907	6907	**6907**	6907	6907	**6907**	6907	6907	**6907**	6907	–	–	–
	Output RPM	0.57	**0.29**	0.19	0.57	**0.29**	0.19	0.57	**0.29**	0.19	0.57	**0.29**	0.19	–	–	–
	Input Hp (max) **(C)**	0.38	**0.19**	0.13	0.38	**0.19**	0.13	0.38	**0.19**	0.13	0.38	**0.19**	0.13	–	–	–
6005.80	Output torque, in-lb	41623	**41623**	41623	41623	**41623**	41623	41623	**41623**	41623	41623	**41623**	41623	–	–	–
	OHL input shaft	(A)	**(A)**	(A)	**(A)**	**(A)**	(A)	**(A)**	**(A)**	(A)	**(A)**	**(A)**	(A)	–	–	–
	OHL output shaft **(B)**	6907	**6907**	6907	6907	**6907**	6907	6907	**6907**	6907	6907	**6907**	6907	–	–	–
	Output RPM	0.49	**0.25**	0.17	0.49	**0.25**	0.17	–	–	–	–	–	–	–	–	–
	Input Hp (max) **(C)**	0.33	**0.17**	0.11	0.33	**0.17**	0.11	–	–	–	–	–	–	–	–	–
6977.16	Output torque, in-lb	41623	**41623**	41623	41623	**41623**	41623	–	–	–	–	–	–	–	–	–
	OHL input shaft	(A)	**(A)**	(A)	**(A)**	**(A)**	(A)	–	–	–	–	–	–	–	–	–
	OHL output shaft **(B)**	6907	**6907**	6907	6907	**6907**	6907	–	–	–	–	–	–	–	–	–

Service factor: 1.0

(A) (B) (C) - See footnotes page on inside back cover

Blank areas (-) indicate configuration not available

RHB 148

Size: B_1483

Triple reduction – Clamp collar, three-piece coupled, separate

NEMA motor frame		180TC			—			210TC			250TC			280TC			320TC			360TC		
IEC motor frame		100D			112D			132D			160D			180D/200D			225D			—		
Separate group		100			112			132			160			180			225			—		
Ratio	Output Rating data	3450	1750	1160	3450	1750	1160	3450	1750	1160	3450	1750	1160	3450	1750	1160	3450	1750	1160	3450	1750	1160
	Output RPM	–	–	–	–	–	–	–	–	–	714	**362**	240	714	**362**	240	714	**362**	240	714	**362**	240
	Input Hp (max) **(C)**	–	–	–	–	–	–	–	–	–	89.63	**45.49**	30.14	182.55	**92.65**	61.38	247.87	**136.15**	89.92	247.87	**136.15**	89.92
4.83	Output torque, in-lb	–	–	–	–	–	–	–	–	–	7910	**7915**	7910	16110	**16120**	16110	21875	**23688**	23602	21875	**23688**	23602
	OHL input shaft	–	–	–	–	–	–	–	–	–	**(A)**	**1523**	1587	**(A)**	**1739**	2148	**(A)**	**2182**	2284	**(A)**	**2182**	2284
	OHL output shaft **(B)**	–	–	–	–	–	–	–	–	–	**(A)**	**9207**	10246	**(A)**	**9207**	10246	**(A)**	**9207**	10246	**(A)**	**9207**	10246
	Output RPM	–	–	–	–	–	–	–	–	–	537	**272**	181	537	**272**	181	537	**272**	181	537	**272**	181
	Input Hp (max) **(C)**	–	–	–	–	–	–	–	–	–	89.63	**45.49**	30.14	181.92	**92.65**	61.38	209.62	**126.51**	86.71	209.62	**126.51**	86.71
6.43	Output torque, in-lb	–	–	–	–	–	–	–	–	–	10525	**10531**	10524	21361	**21448**	21435	24613	**29288**	30281	24613	**29288**	30281
	OHL input shaft	–	–	–	–	–	–	–	–	–	**(A)**	**1474**	1587	**(A)**	**1631**	2075	**(A)**	**2133**	2274	**(A)**	**2133**	2274
	OHL output shaft **(B)**	–	–	–	–	–	–	–	–	–	**(A)**	**9207**	10246	**(A)**	**9207**	10246	**(A)**	**9207**	10246	**(A)**	**9207**	10246
	Output RPM	–	–	–	–	–	–	464	**235**	156	464	**235**	156	464	**235**	156	464	**235**	156	464	**235**	156
	Input Hp (max) **(C)**	–	–	–	–	–	–	64.56	**32.76**	21.70	89.63	**45.49**	30.14	176.60	**92.67**	61.38	189.91	**116.71**	84.42	189.91	**116.71**	84.42
7.44	Output torque, in-lb	–	–	–	–	–	–	8775	**8780**	8775	12187	**12193**	12186	24011	**24838**	24819	25819	**31280**	34136	25819	**31280**	34136
	OHL input shaft	–	–	–	–	–	–	**(A)**	**948**	990	**(A)**	**1442**	1588	**(A)**	**1562**	2036	**(A)**	**2094**	2287	**(A)**	**2094**	2287
	OHL output shaft **(B)**	–	–	–	–	–	–	**(A)**	**10246**	10246	**(A)**	**10246**	10246	**(A)**	**10246**	10246	**(A)**	**10246**	10246	**(A)**	**10246**	10246
	Output RPM	–	–	–	–	–	–	393	**199**	132	393	**199**	132	393	**199**	132	393	**199**	132	393	**199**	132
	Input Hp (max) **(C)**	–	–	–	–	–	–	64.38	**32.76**	21.70	84.99	**45.49**	30.14	167.09	**91.75**	60.62	169.74	**105.76**	76.39	169.74	**105.76**	76.39
8.79	Output torque, in-lb	–	–	–	–	–	–	10334	**10366**	10360	13643	**14396**	14387	26820	**29036**	28938	27246	**33468**	36466	27246	**33468**	36466
	OHL input shaft	–	–	–	–	–	–	**(A)**	**949**	990	**(A)**	**1397**	1589	**(A)**	**1321**	2003	**(A)**	**2058**	2285	**(A)**	**2058**	2285
	OHL output shaft **(B)**	–	–	–	–	–	–	9207	**10246**	11162	9207	**10246**	11162	9207	**10246**	11162	9207	**10246**	11162	(A)	**10246**	11162
	Output RPM	–	–	–	–	–	–	–	–	–	353	**179**	119	353	**179**	119	353	**179**	119	353	**179**	119
	Input Hp (max) **(C)**	–	–	–	–	–	–	–	–	–	89.63	**45.49**	30.14	182.55	**92.66**	61.38	244.22	**136.16**	89.92	244.22	**136.16**	89.92
9.77	Output torque, in-lb	–	–	–	–	–	–	–	–	–	16000	**16009**	16000	32587	**32606**	32586	43594	**47914**	47739	43594	**47914**	47739
	OHL input shaft	–	–	–	–	–	–	–	–	–	**(A)**	**1523**	1587	**(A)**	**1739**	2148	**(A)**	**2182**	2284	**(A)**	**2182**	2284
	OHL output shaft **(B)**	–	–	–	–	–	–	–	–	–	9207	**10246**	11162	9207	**10246**	11162	9207	**10246**	11162	9207	**10246**	11162
	Output RPM	–	–	–	–	–	–	–	–	–	265	**135**	89	265	**135**	89	265	**135**	89	265	**135**	89
	Input Hp (max) **(C)**	–	–	–	–	–	–	–	–	–	89.63	**45.49**	30.14	181.92	**92.65**	61.38	207.73	**126.53**	86.71	207.73	**126.53**	86.71
13.00	Output torque, in-lb	–	–	–	–	–	–	–	–	–	21289	**21301**	21288	43207	**43383**	43357	49338	**59242**	61251	49338	**59242**	61251
	OHL input shaft	–	–	–	–	–	–	–	–	–	**(A)**	**1474**	1587	**(A)**	**1631**	2075	**(A)**	**2128**	2274	**(A)**	**2128**	2274
	OHL output shaft **(B)**	–	–	–	–	–	–	–	–	–	9207	**11162**	11951	9207	**11162**	11951	9207	**11162**	11951	9207	**11162**	11951
	Output RPM	–	–	–	–	–	–	229	**116**	77	229	**116**	77	229	**116**	77	229	**116**	77	229	**116**	77
	Input Hp (max) **(C)**	–	–	–	–	–	–	64.38	**32.76**	21.70	89.63	**45.49**	30.14	176.60	**92.65**	61.38	189.91	**116.70**	81.15	189.91	**116.7**	81.15
15.05	Output torque, in-lb	–	–	–	–	–	–	20902	**17760**	17749	24650	**24664**	24649	48567	**50233**	50203	52226	**63268**	66374	52226	**63268**	66374
	OHL input shaft	–	–	–	–	–	–	**(A)**	**948**	990	**(A)**	**1442**	1588	**(A)**	**1562**	2036	**(A)**	**2094**	2287	**(A)**	**2094**	2287
	OHL output shaft **(B)**	–	–	–	–	–	–	10246	**11162**	11951	10246	**11162**	11951	10246	**11162**	11951	10246	**11162**	11951	10246	**11162**	11951
	Output RPM	–	–	–	–	–	–	194	**98**	65	194	**98**	65	194	**98**	65	194	**98**	65	194	**98**	65
	Input Hp (max) **(C)**	–	–	–	–	–	–	64.38	**32.76**	21.70	84.99	**45.49**	30.14	167.09	**91.76**	60.62	169.74	**103.53**	69.59	169.74	**103.53**	69.59
17.77	Output torque, in-lb	–	–	–	–	–	–	20902	**20968**	20955	27595	**29119**	29102	54250	**58731**	58534	55111	**66265**	67198	55111	**66265**	67198
	OHL input shaft	–	–	–	–	–	–	**(A)**	**949**	990	**(A)**	**1397**	1589	**(A)**	**1321**	2003	**(A)**	**2120**	2285	**(A)**	**2120**	2285
	OHL output shaft **(B)**	–	–	–	–	–	–	10246	**11951**	11951	10246	**11951**	11951	10246	**11951**	11951	10246	**11951**	11951	10246	**11951**	11951
	Output RPM	–	–	–	174	**88**	59	174	**88**	59	174	**88**	59	174	**88**	59	174	**88**	59	174	**88**	59
	Input Hp (max) **(C)**	–	–	–	27.34	**13.88**	9.19	62.19	**32.76**	21.70	79.92	**43.58**	28.97	145.01	**87.33**	57.70	157.48	**93.52**	62.90	157.48	**93.52**	62.9
19.84	Output torque, in-lb	–	–	–	9911	**9917**	9911	22543	**23411**	23397	28973	**31142**	31230	52568	**62412**	62215	57090	**66834**	67818	57090	**66834**	67818
	OHL input shaft	–	–	–	**(A)**	**835**	870	**(A)**	**949**	991	**(A)**	**1384**	1589	**(A)**	**1250**	1983	**(A)**	**2192**	2285	**(A)**	**2192**	2285
	OHL output shaft **(B)**	–	–	–	10246	**11951**	12561	10246	**11951**	12561	10246	**11951**	12561	10246	**11951**	12561	10246	**11951**	12561	10246	**11951**	12561
	Output RPM	149	**75**	50	149	**75**	50	149	**75**	50	149	**75**	50	149	**75**	50	149	**75**	50	149	**75**	50
	Input Hp (max) **(C)**	20.42	**10.36**	6.87	27.34	**13.88**	9.19	59.33	**31.87**	21.45	74.14	**40.43**	26.87	128.69	**81.03**	54.46	141.61	**81.03**	54.46	141.61	**81.03**	54.46
23.19	Output torque, in-lb	8649	**8654**	8649	11581	**11588**	11581	25132	**26617**	27024	31406	**33762**	33854	54513	**67670**	68609	59983	**67670**	68611	59983	**67670**	68611
	OHL input shaft	**(A)**	**713**	742	**(A)**	**843**	877	**(A)**	**946**	990	**(A)**	**1370**	1589	**(A)**	**1151**	1938	**(A)**	**2199**	2292	**(A)**	**2199**	2292
	OHL output shaft **(B)**	11162	**11951**	12561	11162	**11951**	12561	11162	**11951**	12561	11162	**11951**	12561	11162	**11951**	12561	11162	**11951**	12561	1162	**11951**	12561
	Output RPM	130	**66**	44	130	**66**	44	130	**66**	44	130	**66**	44	130	**66**	44	130	**66**	44	130	**66**	44
	Input Hp (max) **(C)**	20.42	**10.36**	6.87	27.34	**13.88**	9.19	56.88	**30.56**	20.57	69.86	**38.10**	25.32	115.52	**71.44**	48.00	128.96	**71.44**	48.00	128.96	**71.44**	48.00
26.58	Output torque, in-lb	9916	**9922**	9916	13277	**13285**	13277	27626	**29258**	29711	33926	**36474**	36575	56100	**68393**	69333	62627	**68393**	69335	62627	**68393**	69335
	OHL input shaft	**(A)**	**712**	741	**(A)**	**842**	877	**(A)**	**952**	988	**(A)**	**1352**	1588	**(A)**	**1213**	1873	**(A)**	**2189**	2283	**(A)**	**2189**	2283
	OHL output shaft **(B)**	11162	**11951**	12561	11162	**11951**	12561	11162	**11951**	12561	11162	**11951**	12561	11162	**11951**	12561	11162	**11951**	12561	11162	**11951**	12561

Service factor: 1.0

(A) (B) (C) - See footnotes page on inside back cover

Blank areas (-) indicate configuration not available

RHB 148

Size: B_1483

Triple reduction – Clamp collar, three-piece coupled, separate

NEMA motor frame		180TC			—			210TC			250TC			280TC			320TC			360TC		
IEC motor frame		100D			112D			132D			160D			180D/200D			225D			—		
Separate group		100			112			132			160			180			225			—		
Ratio	Output Rating data	3450	1750	1160	3450	1750	1160	3450	1750	1160	3450	1750	1160	3450	1750	1160	3450	1750	1160	3450	1750	1160
	Output RPM	–	–	–	112	**57**	38	112	**57**	38	112	**57**	38	112	**57**	38	112	**57**	38	112	**57**	38
	Input Hp (max) **(C)**	–	–	–	27.34	**13.88**	9.19	53.58	**28.80**	19.38	64.94	**35.42**	23.54	114.77	**62.48**	41.99	114.77	**62.48**	41.99	114.77	**62.48**	41.99
30.74	Output torque, in-lb	–	–	–	15351	**15359**	15350	30083	**31881**	32361	36463	**39207**	39308	64442	**69154**	70112	64442	**69154**	70112	64442	**69154**	70112
	OHL input shaft	–	–	–	**(A)**	**840**	877	**(A)**	**953**	986	**(A)**	**1334**	1587	**(A)**	**1268**	1824	**(A)**	**2197**	2290	**(A)**	**2197**	2290
	OHL output shaft **(B)**	–	–	–	11162	**12561**	13027	11162	**12561**	13027	11162	**12561**	13027	11162	**12561**	13027	11162	**12561**	13027	11162	**12561**	13027
	Output RPM	–	–	–	–	–	–	–	–	–	111	**56**	37	111	**56**	37	111	**56**	37	–	–	–
	Input Hp (max) **(C)**	–	–	–	–	–	–	–	–	–	89.63	**45.49**	30.14	116.84	**63.25**	41.90	116.84	**63.25**	41.90	–	–	–
31.10	Output torque, in-lb	–	–	–	–	–	–	–	–	–	50925	**50954**	50924	66384	**70848**	70808	66384	**70848**	70808	–	–	–
	OHL input shaft	–	–	–	–	–	–	–	–	–	**(A)**	**1523**	1587	**(A)**	**1957**	2313	**(A)**	**2205**	2297	–	–	–
	OHL output shaft **(B)**	–	–	–	–	–	–	–	–	–	11162	**12561**	13027	11162	**12561**	13027	11162	**12561**	13027	–	–	–
	Output RPM	–	–	–	–	–	–	–	–	–	83	**42**	28	83	**42**	28	83	**42**	28	–	–	–
	Input Hp (max) **(C)**	–	–	–	–	–	–	–	–	–	77.27	**42.12**	28.00	87.78	**47.54**	31.49	91.66	**47.54**	31.49	–	–	–
41.38	Output torque, in-lb	–	–	–	–	–	–	–	–	–	58413	**62775**	62944	66357	**70848**	70806	69288	**70848**	70808	–	–	–
	OHL input shaft	–	–	–	–	–	–	–	–	–	**(A)**	**1504**	1592	**(A)**	**2018**	2443	**(A)**	**2194**	2287	–	–	–
	OHL output shaft **(B)**	–	–	–	–	–	–	–	–	–	11951	**12561**	13027	11951	**12561**	13027	11951	**12561**	13027	–	–	–
	Output RPM	–	–	–	–	–	–	72	**37**	24	72	**37**	24	72	**37**	24	72	**37**	24	–	–	–
	Input Hp (max) **(C)**	–	–	–	–	–	–	64.54	**32.76**	21.70	80.10	**41.06**	27.20	80.10	**41.06**	27.20	80.10	**41.06**	27.20	–	–	–
47.91	Output torque, in-lb	–	–	–	–	–	–	56494	**56526**	56493	70108	**70848**	70806	70108	**70848**	70808	70108	**70848**	70808	–	–	–
	OHL input shaft	–	–	–	–	–	–	**(A)**	**948**	991	**(A)**	**1484**	1588	**(A)**	**2044**	2403	**(A)**	**2190**	2283	–	–	–
	OHL output shaft **(B)**	–	–	–	–	–	–	11951	**13027**	13027	11951	**13027**	13027	11951	**13027**	13027	11951	**13027**	13027	–	–	–
	Output RPM	–	–	–	–	–	–	61	**31**	21	61	**31**	21	61	**31**	21	61	**31**	21	–	–	–
	Input Hp (max) **(C)**	–	–	–	–	–	–	64.38	**32.76**	21.70	68.52	**34.78**	23.04	68.52	**34.78**	23.04	68.52	**34.78**	23.04	–	–	–
56.57	Output torque, in-lb	–	–	–	–	–	–	66528	**66736**	66697	70808	**70848**	70808	70808	**70848**	70808	70808	**70848**	70808	–	–	–
	OHL input shaft	–	–	–	–	–	–	**(A)**	**949**	990	**(A)**	**1509**	1591	**(A)**	**2068**	2426	**(A)**	**2199**	2292	–	–	–
	OHL output shaft **(B)**	–	–	–	–	–	–	12561	**13027**	13027	12561	**13027**	13027	12561	**13027**	13027	12561	**13027**	13027	–	–	–
	Output RPM	–	–	–	55	**28**	18	55	**28**	18	55	**28**	18	55	**28**	18	55	**28**	18	–	–	–
	Input Hp (max) **(C)**	–	–	–	27.34	**13.88**	9.19	61.37	**31.15**	20.63	61.37	**31.15**	20.63	61.37	**31.15**	20.63	61.37	**31.15**	20.63	–	–	–
63.16	Output torque, in-lb	–	–	–	31545	**31563**	31545	70808	**70848**	70806	70808	**70848**	70808	70808	**70848**	70808	70808	**70848**	70808	–	–	–
	OHL input shaft	–	–	–	**(A)**	**835**	870	**(A)**	**950**	994	**(A)**	**1524**	1593	**(A)**	**2084**	2439	**(A)**	**2202**	2295	–	–	–
	OHL output shaft **(B)**	–	–	–	12561	**13027**	13027	12561	**13027**	13027	12561	**13027**	13027	12561	**13027**	13027	12561	**13027**	13027	–	–	–
	Output RPM	47	**24**	16	47	**24**	16	47	**24**	16	47	**24**	16	47	**24**	16	47	**24**	16	–	–	–
	Input Hp (max) **(C)**	20.42	**10.36**	6.87	27.34	**13.88**	9.19	52.52	**26.66**	17.66	52.52	**26.66**	17.66	52.52	**26.66**	17.66	52.52	**26.66**	17.66	–	–	–
73.80	Output torque, in-lb	27528	**27544**	27528	36860	**36881**	36860	70808	**70848**	70808	70808	**70848**	70808	70808	**70848**	70808	70808	**70848**	70808	–	–	–
	OHL input shaft	**(A)**	**713**	742	**(A)**	**843**	877	**(A)**	**950**	995	**(A)**	**1531**	1594	**(A)**	**2100**	2455	**(A)**	**2206**	2298	–	–	–
	OHL output shaft **(B)**	12561	**13027**	13027	12561	**13027**	13027	12561	**13027**	13027	12561	**13027**	13027	12561	**13027**	13027	12561	**13027**	13027	–	–	–
	Output RPM	41	**21**	14	41	**21**	14	41	**21**	14	41	**21**	14	41	**21**	14	41	**21**	14	–	–	–
	Input Hp (max) **(C)**	20.42	**10.36**	6.87	27.34	**13.88**	9.19	45.81	**23.25**	15.40	45.81	**23.25**	15.40	45.81	**23.25**	15.40	45.81	**23.25**	15.40	–	–	–
84.61	Output torque, in-lb	31561	**31579**	31561	42259	**42283**	42258	70808	**70848**	70808	70808	**70848**	70808	70808	**70848**	70808	70808	**70848**	70808	–	–	–
	OHL input shaft	**(A)**	**712**	741	**(A)**	**842**	877	**(A)**	**954**	995	**(A)**	**1532**	1595	**(A)**	**2113**	2468	**(A)**	**2207**	2300	–	–	–
	OHL output shaft **(B)**	12561	**13027**	13027	12561	**13027**	13027	12561	**13027**	13027	12561	**13027**	13027	12561	**13027**	13027	12561	**13027**	13027	–	–	–
	Output RPM	–	–	–	35	**18**	12	35	**18**	12	35	**18**	12	35	**18**	12	35	**18**	12	–	–	–
	Input Hp (max) **(C)**	–	–	–	27.34	**13.88**	9.19	39.62	**20.11**	13.32	39.62	**20.11**	13.32	39.62	**20.11**	13.32	39.62	**20.11**	13.32	–	–	–
97.82	Output torque, in-lb	–	–	–	48858	**48886**	48857	70808	**70848**	70808	70808	**70848**	70808	70808	**70848**	70808	70808	**70848**	70808	–	–	–
	OHL input shaft	–	–	–	**(A)**	**840**	877	**(A)**	**956**	996	**(A)**	**1521**	1585	**(A)**	**2124**	2483	**(A)**	**2208**	2301	–	–	–
	OHL output shaft **(B)**	–	–	–	13027	**13027**	13027	13027	**13027**	13027	13027	**13027**	13027	13027	**13027**	13027	13027	**13027**	13027	–	–	–
	Output RPM	34	**17**	11	34	**17**	11	34	**17**	11	34	**17**	11	34	**17**	11	34	**17**	11	–	–	–
	Input Hp (max) **(C)**	20.42	**10.36**	6.87	27.18	**13.88**	9.19	38.17	**19.37**	12.84	38.17	**19.37**	12.84	38.17	**19.37**	12.84	38.17	**19.37**	12.84	–	–	–
101.53	Output torque, in-lb	37873	**37894**	37872	50410	**50740**	50710	70808	**70848**	70808	70808	**70848**	70808	70808	**70848**	70808	70808	**70848**	70808	–	–	–
	OHL input shaft	**(A)**	**708**	740	**(A)**	**839**	878	**(A)**	**956**	996	**(A)**	**1522**	1586	**(A)**	**2127**	2485	**(A)**	**2209**	2301	–	–	–
	OHL output shaft **(B)**	13027	**13027**	13027	13027	**13027**	13027	13027	**13027**	13027	13027	**13027**	13027	13027	**13027**	13027	13027	**13027**	13027	–	–	–
	Output RPM	31	**16**	10	31	**16**	10	31	**16**	10	31	**16**	10	31	**16**	10	31	**16**	10	–	–	–
	Input Hp (max) **(C)**	20.42	**10.36**	6.87	26.07	**13.88**	9.19	34.50	**17.51**	11.60	34.50	**17.51**	11.60	34.50	**17.51**	11.60	34.50	**17.51**	11.60	–	–	–
112.35	Output torque, in-lb	41908	**41932**	41907	53509	**56146**	56112	70808	**70848**	70808	70808	**70848**	70808	70808	**70848**	70808	70808	**70848**	70808	–	–	–
	OHL input shaft	**(A)**	**711**	739	**(A)**	**835**	877	**(A)**	**957**	997	**(A)**	**1520**	1583	**(A)**	**2134**	2491	**(A)**	**2209**	2301	–	–	–
	OHL output shaft **(B)**	13027	**13027**	13027	13027	**13027**	13027	13027	**13027**	13027	13027	**13027**	13027	13027	**13027**	13027	13027	**13027**	13027	–	–	–

Service factor: 1.0

(A) (B) (C) - See footnotes page on inside back cover

Blank areas (-) indicate configuration not available

RHB 148

Size: B_1483

Triple reduction – Clamp collar, three-piece coupled, separate

NEMA motor frame		180TC			—			210TC			250TC			280TC			320TC			360TC		
IEC motor frame		100D			112D			132D			160D			180D/200D			225D			—		
Separate group		100			112			132			160			180			225			—		
Ratio	Output Rating data	3450	1750	1160	3450	1750	1160	3450	1750	1160	3450	1750	1160	3450	1750	1160	3450	1750	1160	3450	1750	1160
	Output RPM	26	13	9	26	13	9	26	13	9	26	13	9	26	13	9	26	13	9	–	–	–
	Input Hp (max) (C)	20.36	10.36	6.87	25.11	13.44	9.08	29.48	14.96	9.91	29.48	14.96	9.91	29.48	14.96	9.91	29.48	14.96	9.91	–	–	–
131.49	Output torque, in-lb	48895	49075	49046	60305	63665	64845	70808	70848	70808	70808	70848	70808	70808	70848	70808	70808	70848	70808	–	–	–
	OHL input shaft	(A)	712	737	(A)	838	876	(A)	957	988	(A)	1525	1589	(A)	2143	2499	(A)	2210	2302	–	–	–
	OHL output shaft (B)	13027	13027	13027	13027	13027	13027	13027	13027	13027	13027	13027	13027	13027	13027	13027	13027	13027	13027	–	–	–
	Output RPM	24	12	8	24	12	8	24	12	8	24	12	8	24	12	8	24	12	8	–	–	–
	Input Hp (max) (C)	19.23	10.09	6.87	23.72	12.71	8.58	27.22	13.81	9.15	27.22	13.81	9.15	27.22	13.81	9.15	27.22	13.81	9.15	–	–	–
142.41	Output torque, in-lb	50033	51758	53117	61716	65162	66372	70808	70848	70808	70808	70848	70808	70808	70848	70808	70808	70848	70808	–	–	–
	OHL input shaft	(A)	712	737	(A)	838	876	(A)	958	990	(A)	1527	1590	(A)	2147	2503	(A)	2210	2302	–	–	–
	OHL output shaft (B)	13027	13027	13027	13027	13027	13027	13027	13027	13027	13027	13027	13027	13027	13027	13027	13027	13027	13027	–	–	–
	Output RPM	22	11	7	22	11	7	22	11	7	22	11	7	22	11	7	–	–	–	–	–	–
	Input Hp (max) (C)	18.57	9.75	6.71	22.96	12.30	8.20	24.39	12.38	8.20	24.39	12.38	8.20	24.39	12.38	8.2	–	–	–	–	–	–
158.93	Output torque, in-lb	53928	55811	57958	66677	70405	70806	70808	70848	70808	70808	70848	70808	70808	70848	70808	–	–	–	–	–	–
	OHL input shaft	(A)	659	736	(A)	751	875	(A)	949	989	(A)	1529	1592	(A)	2153	2503	–	–	–	–	–	–
	OHL output shaft (B)	13027	13027	13027	13027	13027	13027	13027	13027	13027	13027	13027	13027	(A)	13027	13027	–	–	–	–	–	–
	Output RPM	21	10	7	21	10	7	21	10	7	21	10	7	21	10	7	–	–	–	–	–	–
	Input Hp (max) (C)	17.89	9.39	6.47	22.19	11.67	7.73	23.00	11.67	7.73	23.00	11.67	7.73	23.00	11.67	7.73	–	–	–	–	–	–
168.50	Output torque, in-lb	55077	57009	59201	68310	70848	70806	70808	70848	70808	70808	70848	70808	70808	70848	70808	–	–	–	–	–	–
	OHL input shaft	(A)	639	736	(A)	755	875	(A)	950	991	(A)	1530	1593	(A)	2155	2503	–	–	–	–	–	–
	OHL output shaft (B)	13027	13027	13027	13027	13027	13027	13027	13027	13027	13027	13027	13027	13027	13027	13027	–	–	–	–	–	–
	Output RPM	18	9	6	18	9	6	18	9	6	18	9	6	–	–	–	–	–	–	–	–	–
	Input Hp (max) (C)	17.23	9.04	6.23	20.29	10.30	6.82	20.29	10.30	6.82	20.29	10.30	6.82	–	–	–	–	–	–	–	–	–
191.02	Output torque, in-lb	60116	62204	64612	70808	70848	70806	70808	70848	70808	70808	70848	70808	–	–	–	–	–	–	–	–	–
	OHL input shaft	(A)	514	738	(A)	786	873	(A)	950	992	(A)	1531	1594	–	–	–	–	–	–	–	–	–
	OHL output shaft (B)	13027	13027	13027	13027	13027	13027	13027	13027	13027	13027	13027	13027	–	–	–	–	–	–	–	–	–
	Output RPM	17	9	6	17	9	6	17	9	6	17	9	6	–	–	–	–	–	–	–	–	–
	Input Hp (max) (C)	16.58	8.55	5.99	18.96	9.63	6.38	18.96	9.63	6.38	18.96	9.63	6.38	–	–	–	–	–	–	–	–	–
204.38	Output torque, in-lb	61904	62906	66524	70808	70848	70806	70808	70848	70808	70808	70848	70808	–	–	–	–	–	–	–	–	–
	OHL input shaft	(A)	507	737	(A)	801	873	(A)	951	993	(A)	1532	1595	–	–	–	–	–	–	–	–	–
	OHL output shaft (B)	13027	13027	13027	13027	13027	13027	13027	13027	13027	13027	13027	13027	–	–	–	–	–	–	–	–	–
	Output RPM	16	8	5	16	8	5	16	8	5	–	–	–	–	–	–	–	–	–	–	–	–
	Input Hp (max) (C)	15.93	12.06	5.76	18.03	9.15	6.06	18.03	9.15	6.06	–	–	–	–	–	–	–	–	–	–	–	–
214.96	Output torque, in-lb	62546	63335	67238	70808	70848	70806	70808	70848	70808	–	–	–	–	–	–	–	–	–	–	–	–
	OHL input shaft	(A)	(A)	738	(A)	815	873	(A)	952	994	–	–	–	–	–	–	–	–	–	–	–	–
	OHL output shaft (B)	13027	13027	13027	13027	13027	13027	13027	13027	13027	–	–	–	–	–	–	–	–	–	–	–	–
	Output RPM	15	8	5	15	8	5	15	8	5	–	–	–	–	–	–	–	–	–	–	–	–
	Input Hp (max) (C)	15.13	11.26	5.48	16.71	8.48	5.62	16.71	8.48	5.62	–	–	–	–	–	–	–	–	–	–	–	–
231.95	Output torque, in-lb	64128	64024	69062	70808	70848	70808	70808	70848	70808	–	–	–	–	–	–	–	–	–	–	–	–
	OHL input shaft	(A)	(A)	737	(A)	830	874	(A)	953	995	–	–	–	–	–	–	–	–	–	–	–	–
	OHL output shaft (B)	13027	13027	13027	13027	13027	13027	13027	13027	13027	–	–	–	–	–	–	–	–	–	–	–	–
	Output RPM	14	7	5	14	7	5	14	7	5	–	–	–	–	–	–	–	–	–	–	–	–
	Input Hp (max) (C)	14.07	7.13	5.18	15.41	7.81	5.18	15.41	7.81	5.18	–	–	–	–	–	–	–	–	–	–	–	–
251.55	Output torque, in-lb	64653	64739	70806	70808	70848	70808	70808	70848	70808	–	–	–	–	–	–	–	–	–	–	–	–
	OHL input shaft	(A)	(A)	742	(A)	840	875	(A)	955	994	–	–	–	–	–	–	–	–	–	–	–	–
	OHL output shaft (B)	13027	13027	13027	13027	13027	13027	13027	13027	13027	–	–	–	–	–	–	–	–	–	–	–	–
	Output RPM	13	6	4	13	6	4	13	6	4	–	–	–	–	–	–	–	–	–	–	–	–
	Input Hp (max) (C)	13.00	6.62	4.75	14.12	7.17	4.75	14.12	7.17	4.75	–	–	–	–	–	–	–	–	–	–	–	–
274.42	Output torque, in-lb	65181	65438	70808	70808	70848	70808	70808	70848	70808	–	–	–	–	–	–	–	–	–	–	–	–
	OHL input shaft	(A)	(A)	683	(A)	841	876	(A)	955	994	–	–	–	–	–	–	–	–	–	–	–	–
	OHL output shaft (B)	13027	13027	13027	13027	13027	13027	13027	13027	13027	–	–	–	–	–	–	–	–	–	–	–	–
	Output RPM	11	6	4	11	6	4	–	–	–	–	–	–	–	–	–	–	–	–	–	–	–
	Input Hp (max) (C)	11.77	6.01	4.26	12.66	6.43	4.26	–	–	–	–	–	–	–	–	–	–	–	–	–	–	–
306.08	Output torque, in-lb	65793	66221	70808	70808	70848	70808	–	–	–	–	–	–	–	–	–	–	–	–	–	–	–
	OHL input shaft	(A)	(A)	700	(A)	842	877	–	–	–	–	–	–	–	–	–	–	–	–	–	–	–
	OHL output shaft (B)	13027	13027	13027	13027	13027	13027	–	–	–	–	–	–	–	–	–	–	–	–	–	–	–

Service factor: 1.0

(A) (B) (C) - See footnotes page on inside back cover

Blank areas (-) indicate configuration not available

RHB 148

Size: B_1484

Four-stage reduction – Clamp collar, three-piece coupled, separate

NEMA motor frame		56C			—			140TC			180TC			—			210TC		
IEC motor frame		71D			80D			90D			100D			112D			132D		
Separate group		71			80			90			100			112			132		
Ratio	Output Rating data	3450	1750	1160	3450	1750	1160	3450	1750	1160	3450	1750	1160	3450	1750	1160	3450	1750	1160
	Output RPM	10.90	**5.53**	3.67	10.90	**5.53**	3.67	10.90	**5.53**	3.67	10.90	**5.53**	3.67	10.90	**5.53**	3.67	10.90	**5.53**	3.67
	Input Hp (max) **(C)**	3.98	**2.02**	1.34	4.85	**2.46**	1.63	8.83	**4.48**	2.97	12.26	**6.22**	4.12	12.26	**6.22**	4.12	12.26	**6.22**	4.12
316.44	Output torque, in-lb	23008	**23021**	23038	28037	**28035**	28024	51044	**51056**	51063	70848	**70848**	70848	70848	**70848**	70848	70848	**70848**	70848
	OHL input shaft	(A)	**(A)**	(A)	(A)	**(A)**	(A)	(A)	**(A)**	(A)	**(A)**	**(A)**	(A)	**(A)**	**(A)**	(A)	**(A)**	**(A)**	(A)
	OHL output shaft **(B)**	13027	**13027**	13027	13027	**13027**	13027	13027	**13027**	13027	**13027**	**13027**	13027	**13027**	**13027**	13027	**13027**	**13027**	13027
	Output RPM	9.48	**4.81**	3.19	9.48	**4.81**	3.19	9.48	**4.81**	3.19	9.48	**4.81**	3.19	9.48	**4.81**	3.19	9.48	**4.81**	3.19
	Input Hp (max) **(C)**	3.98	**2.02**	1.34	4.85	**2.46**	1.63	7.69	**3.90**	2.59	10.66	**5.41**	3.58	10.66	**5.41**	3.58	10.66	**5.41**	3.58
363.83	Output torque, in-lb	26453	**26469**	26489	32236	**32234**	32221	51112	**51103**	51199	70848	**70848**	70848	70848	**70848**	70848	70848	**70848**	70848
	OHL input shaft	(A)	**(A)**	(A)	(A)	**(A)**	(A)	(A)	**(A)**	(A)	**(A)**	**(A)**	(A)	**(A)**	**(A)**	(A)	**(A)**	**(A)**	(A)
	OHL output shaft **(B)**	12561	**13027**	13027	12561	**13027**	13027	12561	**13027**	13027	**12561**	**13027**	13027	**12561**	**13027**	13027	**12561**	**13027**	13027
	Output RPM	8.49	**4.31**	2.86	8.49	**4.31**	2.86	8.49	**4.31**	2.86	8.49	**4.31**	2.86	8.49	**4.31**	2.86	8.49	**4.31**	2.86
	Input Hp (max) **(C)**	3.98	**2.02**	1.34	4.85	**2.46**	1.63	9.55	**4.84**	3.24	9.55	**4.84**	3.21	9.55	**4.84**	3.21	9.55	**4.84**	3.21
406.30	Output torque, in-lb	29541	**29558**	29581	35999	**35997**	35983	70848	**70848**	70848	70848	**70848**	70848	70848	**70848**	70848	70848	**70848**	70848
	OHL input shaft	(A)	**(A)**	(A)	**(A)**	**(A)**	(A)	**(A)**	**(A)**	(A)	**(A)**	**(A)**	(A)	**(A)**	**(A)**	(A)	**(A)**	**(A)**	(A)
	OHL output shaft **(B)**	13027	**13027**	13027	**13027**	**13027**	13027	**13027**	**13027**	13027	**13027**	**13027**	13027	**13027**	**13027**	13027	**13027**	**13027**	13027
	Output RPM	7.45	**3.78**	2.51	7.45	**3.78**	2.51	7.45	**3.78**	2.51	7.45	**3.78**	2.51	7.45	**3.78**	2.51	7.45	**3.78**	2.51
	Input Hp (max) **(C)**	3.98	**2.02**	1.34	4.85	**2.46**	1.63	8.02	**4.07**	2.70	8.38	**4.25**	2.82	8.38	**4.25**	2.82	8.38	**4.25**	2.82
462.98	Output torque, in-lb	33662	**33681**	33707	41020	**41017**	41002	67831	**67862**	67917	70848	**70848**	70848	70848	**70848**	70848	70848	**70848**	70848
	OHL input shaft	(A)	**(A)**	(A)	**(A)**	**(A)**	(A)	**(A)**	**(A)**	(A)	**(A)**	**(A)**	(A)	**(A)**	**(A)**	(A)	**(A)**	**(A)**	(A)
	OHL output shaft **(B)**	13027	**13027**	13027	13027	**13027**	13027	13027	**13027**	13027	13027	**13027**	13027	13027	**13027**	13027	13027	**13027**	13027
	Output RPM	6.63	**3.36**	2.23	6.63	**3.36**	2.23	6.63	**3.36**	2.23	6.63	**3.36**	2.23	6.63	**3.36**	2.23	6.63	**3.36**	2.23
	Input Hp (max) **(C)**	3.98	**2.02**	1.34	4.85	**2.46**	1.63	7.45	**3.78**	2.53	7.45	**3.78**	2.50	7.45	**3.78**	2.50	7.45	**3.78**	2.50
520.67	Output torque, in-lb	37856	**37878**	37907	46131	**46128**	46111	70848	**70848**	70848	70848	**70848**	70848	70848	**70848**	70848	70848	**70848**	70848
	OHL input shaft	(A)	**(A)**	(A)	(A)	**(A)**	(A)	(A)	**(A)**	(A)	**(A)**	**(A)**	(A)	**(A)**	**(A)**	(A)	**(A)**	**(A)**	(A)
	OHL output shaft **(B)**	13027	**13027**	13027	13027	**13027**	13027	13027	**13027**	13027	13027	**13027**	13027	13027	**13027**	13027	13027	**13027**	13027
	Output RPM	5.64	**2.86**	1.90	5.64	**2.86**	1.90	5.64	**2.86**	1.90	5.64	**2.86**	1.90	5.64	**2.86**	1.90	–	**–**	–
	Input Hp (max) **(C)**	3.41	**1.73**	1.15	4.57	**2.32**	1.54	6.23	**3.16**	2.13	6.34	**3.22**	2.13	6.34	**3.22**	2.13	–	**–**	–
611.73	Output torque, in-lb	38107	**38114**	38222	51070	**51112**	51184	69621	**69618**	69464	70848	**70848**	70848	70848	**70848**	70848	–	**–**	–
	OHL input shaft	(A)	**(A)**	(A)	(A)	**(A)**	(A)	(A)	**(A)**	(A)	**(A)**	**(A)**	(A)	**(A)**	**(A)**	(A)	**–**	**–**	–
	OHL output shaft **(B)**	12561	**13027**	13027	12561	**13027**	13027	12561	**13027**	13027	12561	**13027**	13027	12561	**13027**	13027	–	**–**	–
	Output RPM	4.91	**2.49**	1.65	4.91	**2.49**	1.65	4.91	**2.49**	1.65	4.91	**2.49**	1.65	4.91	**2.49**	1.65	4.91	**2.49**	1.65
	Input Hp (max) **(C)**	3.98	**2.02**	1.34	4.85	**2.46**	1.63	5.52	**2.80**	1.86	5.52	**2.80**	1.86	5.52	**2.80**	1.86	5.52	**2.80**	1.86
702.08	Output torque, in-lb	51046	**51076**	51115	62205	**62201**	62177	70848	**70848**	70848	70848	**70848**	70848	70848	**70848**	70848	70848	**70848**	70848
	OHL input shaft	(A)	**(A)**	(A)	**(A)**	**(A)**	(A)	**(A)**	**(A)**	(A)	**(A)**	**(A)**	(A)	**(A)**	**(A)**	(A)	**(A)**	**(A)**	(A)
	OHL output shaft **(B)**	13027	**13027**	13027	13027	**13027**	13027	13027	**13027**	13027	13027	**13027**	13027	13027	**13027**	13027	13027	**13027**	13027
	Output RPM	4.40	**2.23**	1.48	4.40	**2.23**	1.48	4.40	**2.23**	1.48	4.40	**2.23**	1.48	4.40	**2.23**	1.48	4.40	**2.23**	1.48
	Input Hp (max) **(C)**	3.98	**2.02**	1.34	4.85	**2.46**	1.63	4.95	**2.51**	1.66	4.95	**2.51**	1.66	4.95	**2.51**	1.66	4.95	**2.51**	1.66
783.52	Output torque, in-lb	56968	**57001**	57044	69421	**69417**	69390	70848	**70848**	70848	70848	**70848**	70848	70848	**70848**	70848	70848	**70848**	70848
	OHL input shaft	(A)	**(A)**	(A)	**(A)**	**(A)**	(A)	**(A)**	**(A)**	(A)	**(A)**	**(A)**	(A)	**(A)**	**(A)**	(A)	**(A)**	**(A)**	(A)
	OHL output shaft **(B)**	13027	**13027**	13027	13027	**13027**	13027	13027	**13027**	13027	13027	**13027**	13027	13027	**13027**	13027	13027	**13027**	13027
	Output RPM	3.82	**1.94**	1.28	3.82	**1.94**	1.28	3.82	**1.94**	1.28	3.82	**1.94**	1.28	3.82	**1.94**	1.28	3.82	**1.94**	1.28
	Input Hp (max) **(C)**	3.98	**2.02**	1.34	4.29	**2.18**	1.44	4.29	**2.18**	1.44	4.29	**2.18**	1.44	4.29	**2.18**	1.44	4.29	**2.18**	1.44
903.16	Output torque, in-lb	65666	**65704**	65754	70848	**70848**	70848	70848	**70848**	70848	70848	**70848**	70848	70848	**70848**	70848	70848	**70848**	70848
	OHL input shaft	(A)	**(A)**	(A)	**(A)**	**(A)**	(A)	**(A)**	**(A)**	(A)	**(A)**	**(A)**	(A)	**(A)**	**(A)**	(A)	**(A)**	**(A)**	(A)
	OHL output shaft **(B)**	13027	**13027**	13027	13027	**13027**	13027	13027	**13027**	13027	13027	**13027**	13027	13027	**13027**	13027	13027	**13027**	13027
	Output RPM	3.35	**1.70**	1.13	3.35	**1.70**	1.13	3.35	**1.70**	1.13	3.35	**1.70**	1.13	3.35	**1.70**	1.13	–	**–**	–
	Input Hp (max) **(C)**	3.41	**1.73**	1.15	3.77	**1.91**	1.27	3.77	**1.91**	1.27	3.77	**1.91**	1.27	3.77	**1.91**	1.27	–	**–**	–
1029.62	Output torque, in-lb	64140	**64150**	64333	70848	**70848**	70848	70848	**70848**	70848	70848	**70848**	70848	70848	**70848**	70848	–	**–**	–
	OHL input shaft	**(A)**	**(A)**	(A)	**(A)**	**(A)**	(A)	**(A)**	**(A)**	(A)	**(A)**	**(A)**	(A)	**(A)**	**(A)**	(A)	**–**	**–**	–
	OHL output shaft **(B)**	13027	**13027**	13027	13027	**13027**	13027	13027	**13027**	13027	13027	**13027**	13027	13027	**13027**	13027	–	**–**	–
	Output RPM	2.97	**1.50**	1.00	2.97	**1.50**	1.00	2.97	**1.50**	1.00	2.97	**1.50**	1.00	2.97	**1.50**	1.00	2.97	**1.50**	1.00
	Input Hp (max) **(C)**	3.33	**1.69**	1.12	3.33	**1.69**	1.12	3.33	**1.69**	1.12	3.33	**1.69**	1.12	3.33	**1.69**	1.12	3.33	**1.69**	1.12
1163.54	Output torque, in-lb	70848	**70848**	70848	70848	**70848**	70848	70848	**70848**	70848	70848	**70848**	70848	70848	**70848**	70848	70848	**70848**	70848
	OHL input shaft	**(A)**	**(A)**	(A)	**(A)**	**(A)**	(A)	**(A)**	**(A)**	(A)	**(A)**	**(A)**	(A)	**(A)**	**(A)**	(A)	**(A)**	**(A)**	(A)
	OHL output shaft **(B)**	13027	**13027**	13027	13027	**13027**	13027	13027	**13027**	13027	13027	**13027**	13027	13027	**13027**	13027	13027	**13027**	13027

Service factor: 1.0

(A) (B) (C) - See footnotes page on inside back cover

Blank areas (-) indicate configuration not available

RHB 148

Size: B_1484

Four-stage reduction – Clamp collar, three-piece coupled, separate

NEMA motor frame		56C			—			140TC			180TC			—			210TC		
IEC motor frame		71D			80D			90D			100D			112D			132D		
Separate group		71			80			90			100			112			132		
Ratio	Output Rating data	3450	1750	1160	3450	1750	1160	3450	1750	1160	3450	1750	1160	3450	1750	1160	3450	1750	1160
	Output RPM	2.59	**1.31**	0.87	2.59	**1.31**	0.87	2.59	**1.31**	0.87	2.59	**1.31**	0.87	2.59	**1.31**	0.87	–	–	–
	Input Hp (max) **(C)**	2.91	**1.47**	0.98	2.91	**1.47**	0.98	2.91	**1.47**	0.98	2.91	**1.47**	0.98	2.91	**1.47**	0.98	–	–	–
1334.52	Output torque, in-lb	70848	**70848**	70848	70848	**70848**	70848	70848	**70848**	70848	70848	**70848**	70848	70848	**70848**	70848	–	–	–
	OHL input shaft	(A)	**(A)**	(A)	(A)	**(A)**	(A)	(A)	**(A)**	(A)	(A)	**(A)**	(A)	(A)	**(A)**	(A)	–	–	–
	OHL output shaft **(B)**	13027	**13027**	13027	13027	**13027**	13027	13027	**13027**	13027	13027	**13027**	13027	13027	**13027**	13027	–	–	–
	Output RPM	2.22	**1.13**	0.75	2.22	**1.13**	0.75	2.22	**1.13**	0.75	2.22	**1.13**	0.75	2.22	**1.13**	0.75	–	–	–
	Input Hp (max) **(C)**	2.50	**1.27**	0.84	2.50	**1.27**	0.84	2.50	**1.27**	0.84	2.50	**1.27**	0.84	2.50	**1.27**	0.84	–	–	–
1554.16	Output torque, in-lb	70848	**70848**	70848	70848	**70848**	70848	70848	**70848**	70848	70848	**70848**	70848	70848	**70848**	70848	–	–	–
	OHL input shaft	(A)	**(A)**	(A)	(A)	**(A)**	(A)	(A)	**(A)**	(A)	(A)	**(A)**	(A)	(A)	**(A)**	(A)	–	–	–
	OHL output shaft **(B)**	13027	**13027**	13027	13027	**13027**	13027	13027	**13027**	13027	13027	**13027**	13027	13027	**13027**	13027	–	–	–
	Output RPM	2.03	**1.03**	0.68	2.03	**1.03**	0.68	2.03	**1.03**	0.68	2.03	**1.03**	0.68	2.03	**1.03**	0.68	–	–	–
	Input Hp (max) **(C)**	2.28	**1.16**	0.77	2.28	**1.16**	0.77	2.28	**1.16**	0.77	2.28	**1.16**	0.77	2.28	**1.16**	0.77	–	–	–
1702.48	Output torque, in-lb	70848	**70848**	70848	70848	**70848**	70848	70848	**70848**	70848	70848	**70848**	70848	70848	**70848**	70848	–	–	–
	OHL input shaft	(A)	**(A)**	(A)	(A)	**(A)**	(A)	(A)	**(A)**	(A)	(A)	**(A)**	(A)	(A)	**(A)**	(A)	–	–	–
	OHL output shaft **(B)**	13027	**13027**	13027	13027	**13027**	13027	13027	**13027**	13027	13027	**13027**	13027	13027	**13027**	13027	–	–	–
	Output RPM	1.79	**0.91**	0.60	1.79	**0.91**	0.60	1.79	**0.91**	0.60	–	–	–	–	–	–	–	–	–
	Input Hp (max) **(C)**	2.01	**1.02**	0.68	2.01	**1.02**	0.68	2.01	**1.02**	0.68	–	–	–	–	–	–	–	–	–
1925.48	Output torque, in-lb	70848	**70848**	70848	70848	**70848**	70848	70848	**70848**	70848	–	–	–	–	–	–	–	–	–
	OHL input shaft	(A)	**(A)**	(A)	(A)	**(A)**	(A)	(A)	**(A)**	(A)	–	–	–	–	–	–	–	–	–
	OHL output shaft **(B)**	13027	**13027**	13027	13027	**13027**	13027	13027	**13027**	13027	–	–	–	–	–	–	–	–	–
	Output RPM	1.51	**0.77**	0.51	1.51	**0.77**	0.51	1.51	**0.77**	0.51	–	–	–	–	–	–	–	–	–
	Input Hp (max) **(C)**	1.70	**0.86**	0.57	1.70	**0.86**	0.57	1.70	**0.86**	0.57	–	–	–	–	–	–	–	–	–
2284.97	Output torque, in-lb	70848	**70848**	70848	70848	**70848**	70848	70848	**70848**	70848	–	–	–	–	–	–	–	–	–
	OHL input shaft	(A)	**(A)**	(A)	(A)	**(A)**	(A)	(A)	**(A)**	(A)	–	–	–	–	–	–	–	–	–
	OHL output shaft **(B)**	13027	**13027**	13027	13027	**13027**	13027	13027	**13027**	13027	–	–	–	–	–	–	–	–	–
	Output RPM	1.33	**0.67**	0.45	1.33	**0.67**	0.45	1.33	**0.67**	0.45	–	–	–	–	–	–	–	–	–
	Input Hp (max) **(C)**	1.50	**0.76**	0.50	1.50	**0.76**	0.50	1.50	**0.76**	0.50	–	–	–	–	–	–	–	–	–
2593.20	Output torque, in-lb	70848	**70848**	70848	70848	**70848**	70848	70848	**70848**	70848	–	–	–	–	–	–	–	–	–
	OHL input shaft	(A)	**(A)**	(A)	(A)	**(A)**	(A)	(A)	**(A)**	(A)	–	–	–	–	–	–	–	–	–
	OHL output shaft **(B)**	13027	**13027**	13027	13027	**13027**	13027	13027	**13027**	13027	–	–	–	–	–	–	–	–	–
	Output RPM	1.20	**0.61**	0.40	1.20	**0.61**	0.40	1.20	**0.61**	0.40	–	–	–	–	–	–	–	–	–
	Input Hp (max) **(C)**	1.35	**0.68**	0.45	1.35	**0.68**	0.45	1.35	**0.68**	0.45	–	–	–	–	–	–	–	–	–
2876.18	Output torque, in-lb	70848	**70848**	70848	70848	**70848**	70848	70848	**70848**	70848	–	–	–	–	–	–	–	–	–
	OHL input shaft	(A)	**(A)**	(A)	(A)	**(A)**	(A)	(A)	**(A)**	(A)	–	–	–	–	–	–	–	–	–
	OHL output shaft **(B)**	13027	**13027**	13027	13027	**13027**	13027	13027	**13027**	13027	–	–	–	–	–	–	–	–	–

Service factor: 1.0

(A) (B) (C) - See footnotes page on inside back cover

Blank areas (-) indicate configuration not available

RHB 148

Size: B_1485

Five-stage reduction – Clamp collar, three-piece coupled, separate

NEMA motor frame		56C			—			140TC			180TC			—		
IEC motor frame		71D			80D			90D			100D			112D		
Separate group		71			80			90			100			112		
Ratio	Output Rating data	3450	1750	1160	3450	1750	1160	3450	1750	1160	3450	1750	1160	3450	1750	1160
	Output RPM	1.15	**0.58**	0.39	1.15	**0.58**	0.39	1.15	**0.58**	0.39	1.15	**0.58**	0.39	1.15	**0.58**	0.39
	Input Hp (max) **(C)**	1.29	**0.66**	0.43	1.29	**0.66**	0.43	1.29	**0.66**	0.43	1.29	**0.66**	0.43	1.29	**0.66**	0.43
2999.41	Output torque, in-lb	70848	**70848**	70848	70848	**70848**	70848	70848	**70848**	70848	70848	**70848**	70848	70848	**70848**	70848
	OHL input shaft	(A)	**(A)**	(A)	**(A)**	**(A)**	(A)	**(A)**	**(A)**	(A)	**(A)**	**(A)**	(A)	**(A)**	**(A)**	(A)
	OHL output shaft **(B)**	13027	**13027**	13027	**13027**	**13027**	13027	**13027**	**13027**	13027	**13027**	**13027**	13027	**13027**	**13027**	13027
	Output RPM	1.03	**0.52**	0.35	1.03	**0.52**	0.35	1.03	**0.52**	0.35	1.03	**0.52**	0.35	1.03	**0.52**	0.35
	Input Hp (max) **(C)**	1.15	**0.59**	0.39	1.15	**0.59**	0.39	1.15	**0.59**	0.39	1.15	**0.59**	0.39	1.15	**0.59**	0.39
3361.65	Output torque, in-lb	70848	**70848**	70848	70848	**70848**	70848	70848	**70848**	70848	70848	**70848**	70848	70848	**70848**	70848
	OHL input shaft	(A)	**(A)**	(A)	**(A)**	**(A)**	(A)	**(A)**	**(A)**	(A)	**(A)**	**(A)**	(A)	**(A)**	**(A)**	(A)
	OHL output shaft **(B)**	13027	**13027**	13027	**13027**	**13027**	13027	**13027**	**13027**	13027	**13027**	**13027**	13027	**13027**	**13027**	13027
	Output RPM	0.91	**0.46**	0.31	0.91	**0.46**	0.31	0.91	**0.46**	0.31	0.91	**0.46**	0.31	0.91	**0.46**	0.31
	Input Hp (max) **(C)**	1.03	**0.52**	0.35	1.03	**0.52**	0.35	1.03	**0.52**	0.35	1.03	**0.52**	0.35	1.03	**0.52**	0.35
3772.55	Output torque, in-lb	70848	**70848**	70848	70848	**70848**	70848	70848	**70848**	70848	70848	**70848**	70848	70848	**70848**	70848
	OHL input shaft	(A)	**(A)**	(A)	**(A)**	**(A)**	(A)	**(A)**	**(A)**	(A)	**(A)**	**(A)**	(A)	**(A)**	**(A)**	(A)
	OHL output shaft **(B)**	13027	**13027**	13027	**13027**	**13027**	13027	**13027**	**13027**	13027	**13027**	**13027**	13027	**13027**	**13027**	13027
	Output RPM	0.78	**0.40**	0.26	0.78	**0.40**	0.26	0.78	**0.40**	0.26	0.78	**0.40**	0.26	–	–	–
	Input Hp (max) **(C)**	0.88	**0.45**	0.30	0.88	**0.45**	0.30	0.88	**0.45**	0.30	0.88	**0.45**	0.30	–	–	–
4406.83	Output torque, in-lb	70848	**70848**	70848	70848	**70848**	70848	70848	**70848**	70848	70848	**70848**	70848	–	–	–
	OHL input shaft	**(A)**	**(A)**	(A)	**(A)**	**(A)**	(A)	**(A)**	**(A)**	(A)	**(A)**	**(A)**	(A)	–	–	–
	OHL output shaft **(B)**	13027	**13027**	13027	13027	**13027**	13027	13027	**13027**	13027	13027	**13027**	13027	–	–	–
	Output RPM	0.68	**0.35**	0.23	0.68	**0.35**	0.23	0.68	**0.35**	0.23	0.68	**0.35**	0.23	–	–	–
	Input Hp (max) **(C)**	0.77	**0.39**	0.26	0.77	**0.39**	0.26	0.77	**0.39**	0.26	0.77	**0.39**	0.26	–	–	–
5065.85	Output torque, in-lb	70848	**70848**	70848	70848	**70848**	70848	70848	**70848**	70848	70848	**70848**	70848	–	–	–
	OHL input shaft	(A)	(A)	(A)	**(A)**	**(A)**	(A)	**(A)**	**(A)**	(A)	**(A)**	**(A)**	(A)	–	–	–
	OHL output shaft **(B)**	13027	**13027**	13027	13027	**13027**	13027	13027	**13027**	13027	13027	**13027**	13027	–	–	–
	Output RPM	0.60	**0.31**	0.20	0.60	**0.31**	0.20	0.60	**0.31**	0.20	0.60	**0.31**	0.20	–	–	–
	Input Hp (max) **(C)**	0.68	**0.34**	0.23	0.68	**0.34**	0.23	0.68	**0.34**	0.23	0.68	**0.34**	0.23	–	–	–
5702.89	Output torque, in-lb	70848	**70848**	70848	70848	**70848**	70848	70848	**70848**	70848	70848	**70848**	70848	–	–	–
	OHL input shaft	**(A)**	**(A)**	(A)	**(A)**	**(A)**	(A)	**(A)**	**(A)**	(A)	**(A)**	**(A)**	(A)	–	–	–
	OHL output shaft **(B)**	13027	**13027**	13027	13027	**13027**	13027	13027	**13027**	13027	13027	**13027**	13027	–	–	–
	Output RPM	0.56	**0.28**	0.19	0.56	**0.28**	0.19	0.56	**0.28**	0.19	0.56	**0.28**	0.19	–	–	–
	Input Hp (max) **(C)**	0.63	**0.32**	0.21	0.63	**0.32**	0.21	0.63	**0.32**	0.21	0.63	**0.32**	0.21	–	–	–
6177.95	Output torque, in-lb	70848	**70848**	70848	70848	**70848**	70848	70848	**70848**	70848	70848	**70848**	70848	–	–	–
	OHL input shaft	(A)	**(A)**	(A)	**(A)**	**(A)**	(A)	**(A)**	**(A)**	(A)	**(A)**	**(A)**	(A)	–	–	–
	OHL output shaft **(B)**	13027	**13027**	13027	13027	**13027**	13027	13027	**13027**	13027	13027	**13027**	13027	–	–	–
	Output RPM	0.53	**0.27**	0.18	0.53	**0.27**	0.18	0.53	**0.27**	0.18	0.53	**0.27**	0.18	–	–	–
	Input Hp (max) **(C)**	0.60	**0.30**	0.20	0.60	**0.30**	0.20	0.60	**0.30**	0.20	0.60	**0.30**	0.20	–	–	–
6493.15	Output torque, in-lb	70848	**70848**	70848	70848	**70848**	70848	70848	**70848**	70848	70848	**70848**	70848	–	–	–
	OHL input shaft	(A)	**(A)**	(A)	**(A)**	**(A)**	(A)	**(A)**	**(A)**	(A)	**(A)**	**(A)**	(A)	–	–	–
	OHL output shaft **(B)**	13027	**13027**	13027	13027	**13027**	13027	13027	**13027**	13027	13027	**13027**	13027	–	–	–
	Output RPM	0.49	**0.25**	0.16	0.49	**0.25**	0.16	0.49	**0.25**	0.16	–	–	–	–	–	–
	Input Hp (max) **(C)**	0.55	**0.28**	0.18	0.55	**0.28**	0.18	0.55	**0.28**	0.18	–	–	–	–	–	–
7079.20	Output torque, in-lb	70848	**70848**	70848	70848	**70848**	70848	70848	**70848**	70848	–	-	–	–	–	–
	OHL input shaft	(A)	**(A)**	(A)	(A)	**(A)**	(A)	(A)	**(A)**	(A)	–	–	–	–	–	–
	OHL output shaft **(B)**	13027	**13027**	13027	13027	**13027**	13027	13027	**13027**	13027	–	–	–	–	–	–
	Output RPM	0.47	**0.24**	0.16	0.47	**0.24**	0.16	0.47	**0.24**	0.16	0.47	**0.24**	0.16	–	–	–
	Input Hp (max) **(C)**	0.53	**0.27**	0.18	0.53	**0.27**	0.18	0.53	**0.27**	0.18	0.53	**0.27**	0.18	–	–	–
7280.36	Output torque, in-lb	70848	**70848**	70848	70848	**70848**	70848	70848	**70848**	70848	70848	**70848**	70848	–	–	–
	OHL input shaft	(A)	**(A)**	(A)	(A)	**(A)**	(A)	(A)	**(A)**	(A)	(A)	**(A)**	(A)	–	–	–
	OHL output shaft **(B)**	13027	**13027**	13027	13027	**13027**	13027	13027	**13027**	13027	13027	**13027**	13027	–	–	–

Service factor: 1.0

(A) (B) (C) - See footnotes page on inside back cover

Blank areas (-) indicate configuration not available

RHB 168

Size: B_1683

Triple reduction – Clamp collar, three-piece coupled, separate

NEMA motor frame		210TC			250TC			280TC			320TC			360TC		
IEC motor frame		132D			160D			180D/200D			225D			250D		
Separate group		132			160			180			225			250		
Ratio	Output Rating data	3450	1750	1160	3450	1750	1160	3450	1750	1160	3450	1750	1160	3450	1750	1160
	Output RPM	–	–	–	522	**265**	176	522	**265**	176	522	**265**	176	522	**265**	176
	Input Hp (max) **(C)**	–	–	–	89.63	**45.49**	30.14	182.55	**92.65**	61.38	92.70	**116.82**	93.51	95.95	**120.91**	96.78
6.61	Output torque, in-lb	–	–	–	10825	**10831**	10825	22047	**22060**	22047	11196	**27813**	33587	11588	**28787**	34764
	OHL input shaft	–	–	–	**(A)**	**1523**	1587	**(A)**	**1745**	2479	**(A)**	**2188**	2281	**(A)**	**2275**	2730
	OHL output shaft **(B)**	–	–	–	**(A)**	**13774**	15278	**(A)**	**13774**	15278	**(A)**	**13774**	15278	**(A)**	**13774**	15278
	Output RPM	–	–	–	399	**203**	134	399	**203**	134	399	**203**	134	399	**203**	134
	Input Hp (max) **(C)**	–	–	–	89.63	**45.49**	30.14	181.92	**92.65**	61.38	89.76	**113.11**	90.54	93.46	**117.78**	94.27
8.64	Output torque, in-lb	–	–	–	14144	**14152**	14144	28707	**28824**	28807	14164	**35186**	42491	14748	**36639**	44245
	OHL input shaft	–	–	–	**(A)**	**1488**	1588	**(A)**	**1640**	2491	**(A)**	**2193**	2284	**(A)**	**2170**	2626
	OHL output shaft **(B)**	–	–	–	13774	**15278**	16566	13774	**15278**	16566	13774	**15278**	16566	13774	**15278**	16566
	Output RPM	339	**172**	114	339	**172**	114	339	**172**	114	339	**172**	114	339	**172**	114
	Input Hp (max) **(C)**	64.54	**32.76**	21.70	89.63	**45.49**	30.14	176.60	**92.65**	61.38	87.59	**110.37**	88.35	91.51	**114.28**	92.31
10.17	Output torque, in-lb	11996	**12003**	11995	16659	**16668**	16658	32822	**33948**	33928	16278	**40439**	48835	17008	**41872**	51025
	OHL input shaft	**(A)**	**948**	990	**(A)**	**1451**	1588	**(A)**	**1546**	2484	**(A)**	**2189**	2284	**(A)**	**2067**	2548
	OHL output shaft **(B)**	13774	**15278**	16566	13774	**15278**	16566	13774	**15278**	16566	13774	**15278**	16566	13774	**15278**	16566
	Output RPM	296	**150**	99	296	**150**	99	296	**150**	99	296	**150**	99	296	**150**	99
	Input Hp (max) **(C)**	64.38	**32.76**	21.70	84.99	**45.49**	30.14	167.09	**91.75**	60.62	84.19	**106.09**	84.92	88.33	**104.90**	89.10
11.67	Output torque, in-lb	13723	**13767**	13758	18118	**19118**	19107	35618	**38560**	38431	17947	**44583**	53840	18830	**44083**	56491
	OHL input shaft	**(A)**	**942**	990	**(A)**	**1415**	1589	**(A)**	**1334**	2007	**(A)**	**2066**	2277	**(A)**	**2034**	2495
	OHL output shaft **(B)**	13774	**16566**	17607	13774	**16566**	17607	13774	**16566**	17607	13774	**16566**	17607	13774	**16566**	17607
	Output RPM	–	–	–	278	**141**	94	278	**141**	94	278	**141**	94	278	**141**	94
	Input Hp (max) **(C)**	–	–	–	89.63	**45.49**	30.14	182.55	**92.66**	61.38	92.70	**116.82**	93.51	95.95	**120.91**	96.78
12.41	Output torque, in-lb	–	–	–	20316	**20328**	20316	41378	**41401**	41377	21012	**52198**	63035	21748	**54027**	65244
	OHL input shaft	–	–	–	**(A)**	**1523**	1587	**(A)**	**1745**	2479	**(A)**	**2188**	2281	**(A)**	**2275**	2730
	OHL output shaft **(B)**	–	–	–	13774	**16566**	17607	13774	**16566**	17607	13774	**16566**	17607	13774	**16566**	17607
	Output RPM	–	–	–	213	**108**	72	213	**108**	72	213	**108**	72	213	**108**	72
	Input Hp (max) **(C)**	–	–	–	89.63	**45.49**	30.14	181.92	**92.65**	61.38	89.76	**113.10**	90.54	93.46	**117.77**	94.27
16.21	Output torque, in-lb	–	–	–	26546	**26561**	26545	53876	**54096**	54063	26582	**66036**	79746	27679	**68762**	83038
	OHL input shaft	–	–	–	**(A)**	**1488**	1588	**(A)**	**1640**	2491	**(A)**	**2193**	2284	**(A)**	**2170**	2626
	OHL output shaft **(B)**	–	–	–	15278	**16566**	17607	15278	**16566**	17607	15278	**16566**	17607	15278	**16566**	17607
	Output RPM	181	**92**	61	181	**92**	61	181	**92**	61	181	**92**	61	181	**92**	61
	Input Hp (max) **(C)**	64.54	**32.76**	21.70	89.63	**45.49**	30.14	176.60	**92.65**	61.38	87.59	**110.37**	88.35	91.51	**114.28**	92.31
19.09	Output torque, in-lb	22513	**22526**	22512	31265	**31283**	31264	61600	**63713**	63675	30550	**75894**	91651	31920	**78583**	95761
	OHL input shaft	**(A)**	**948**	990	**(A)**	**1451**	1588	**(A)**	**1546**	2484	**(A)**	**2189**	2284	**(A)**	**2067**	2548
	OHL output shaft **(B)**	15278	**17607**	19423	15278	**17607**	19423	15278	**17607**	19423	15278	**17607**	19423	15278	**17607**	19423
	Output RPM	158	**80**	53	158	**80**	53	158	**80**	53	158	**80**	53	158	**80**	53
	Input Hp (max) **(C)**	64.38	**32.76**	21.70	84.99	**45.49**	30.14	167.09	**91.75**	60.62	84.19	**106.09**	84.92	88.33	**104.90**	89.10
21.90	Output torque, in-lb	25756	**25837**	25821	34003	**35880**	35859	66846	**72368**	72125	33681	**83672**	101044	35340	**82734**	106020
	OHL input shaft	**(A)**	**942**	991	**(A)**	**1415**	1589	**(A)**	**1334**	2007	**(A)**	**2066**	2277	**(A)**	**2034**	2495
	OHL output shaft **(B)**	16566	**17607**	19423	16566	**17607**	19423	16566	**17607**	19423	16566	**17607**	19423	16566	**17607**	19423
	Output RPM	143	**73**	48	143	**73**	48	143	**73**	48	143	**73**	48	143	**73**	48
	Input Hp (max) **(C)**	62.19	**32.76**	21.70	79.92	**43.58**	28.97	159.05	**87.33**	57.70	81.64	**100.11**	82.35	85.91	**98.43**	86.56
24.14	Output torque, in-lb	27420	**28476**	28459	35241	**37880**	37987	70131	**75916**	75676	35997	**87022**	107992	37881	**85562**	113524
	OHL input shaft	**(A)**	**949**	991	**(A)**	**1404**	1581	**(A)**	**1280**	1994	**(A)**	**2027**	2268	**(A)**	**2014**	2451
	OHL output shaft **(B)**	16566	**17607**	19423	16566	**17607**	19423	16566	**17607**	19423	16566	**17607**	19423	16566	**17607**	19423
	Output RPM	121	**61**	41	121	**61**	41	121	**61**	41	121	**61**	41	121	**61**	41
	Input Hp (max) **(C)**	59.33	**31.87**	21.45	74.14	**40.43**	26.87	151.27	**83.10**	54.89	77.92	**89.27**	74.20	82.35	**87.74**	74.20
28.54	Output torque, in-lb	30936	**32763**	33265	38658	**41559**	41673	78873	**85423**	85116	40629	**91759**	115070	42937	**90186**	115070
	OHL input shaft	**(A)**	**947**	990	**(A)**	**1385**	1579	**(A)**	**1078**	1939	**(A)**	**1990**	2290	**(A)**	**1979**	2253
	OHL output shaft **(B)**	16566	**19423**	19423	16566	**19423**	19423	16566	**19423**	19423	16566	**19423**	19423	16566	**19423**	19423
	Output RPM	106	**54**	36	106	**54**	36	106	**54**	36	106	**54**	36	106	**54**	36
	Input Hp (max) **(C)**	56.88	**30.56**	20.57	69.86	**38.10**	25.32	147.61	**81.07**	53.56	74.57	**81.25**	65.79	79.11	**79.85**	65.79
32.53	Output torque, in-lb	33806	**35803**	36358	41516	**44634**	44758	87725	**94984**	94672	44314	**95199**	116284	47014	**93552**	116288
	OHL input shaft	**(A)**	**952**	988	**(A)**	**1387**	1577	**(A)**	**860**	1876	**(A)**	**1967**	2292	**(A)**	**1956**	2050
	OHL output shaft **(B)**	16566	**19423**	18949	16566	**19423**	18949	16566	**19423**	18949	16566	**19423**	18949	16566	**19423**	18949

Service factor: 1.0

(A) (B) (C) - See footnotes page on inside back cover

Blank areas (-) indicate configuration not available

RHB 168

Size: B_1683

Triple reduction – Clamp collar, three-piece coupled, separate

NEMA motor frame		210TC			250TC			280TC			320TC			360TC		
IEC motor frame		132D			160D			180D/200D			225D			250D		
Separate group		132			160			180			225			250		
Ratio	Output Rating data	3450	1750	1160	3450	1750	1160	3450	1750	1160	3450	1750	1160	3450	1750	1160
	Output RPM	–	–	–	100	**51**	34	100	**51**	34	100	**51**	34	100	**51**	34
	Input Hp (max) **(C)**	–	–	–	89.63	**45.49**	30.14	165.01	**92.65**	61.38	92.70	**96.07**	63.65	95.95	**96.07**	63.65
34.55	Output Torque, In–Lb	–	–	–	56580	**56612**	56578	104160	**115300**	115232	58516	**119556**	119489	60567	**119556**	119489
	OHL input shaft	–	–	–	**(A)**	**1523**	1575	**(A)**	**1745**	2154	**(A)**	**2194**	2286	**(A)**	**2446**	2785
	OHL output shaft **(B)**	–	–	–	16566	**19423**	18949	16566	**19423**	18949	16566	**19423**	18949	16566	**19423**	18949
	Output RPM	–	–	–	76	**39**	26	76	**39**	26	76	**39**	26	76	**39**	26
	Input Hp (max) **(C)**	–	–	–	89.63	**45.49**	30.14	136.83	**73.53**	48.71	89.76	**73.53**	48.71	93.46	**73.53**	48.71
45.15	Output torque, in-lb	–	–	–	73928	**73970**	73926	112855	**119556**	119489	74030	**119556**	119489	77086	**119556**	119489
	OHL input shaft	–	–	–	**(A)**	**1488**	1574	**(A)**	**1801**	2158	**(A)**	**2192**	2287	**(A)**	**2520**	2784
	OHL output shaft **(B)**	–	–	–	17607	**18949**	18949	17607	**18949**	18949	17607	**18949**	18949	17607	**18949**	18949
	Output RPM	65	**33**	22	65	**33**	22	65	**33**	22	65	**33**	22	65	**33**	22
	Input Hp (max) **(C)**	64.54	**32.76**	21.70	89.63	**45.49**	30.14	122.03	**62.43**	41.36	87.59	**62.43**	41.36	91.51	**62.43**	41.36
53.18	Output torque, in-lb	62698	**62733**	62696	87071	**87120**	87069	118538	**119556**	119489	85081	**119556**	119489	88896	**119556**	119489
	OHL input shaft	**(A)**	**948**	990	**(A)**	**1451**	1584	**(A)**	**1841**	2198	**(A)**	**2202**	2295	**(A)**	**2555**	2792
	OHL output shaft **(B)**	17607	**18949**	18949	17607	**18949**	18949	17607	**18949**	18949	17607	**18949**	18949	17607	**18949**	18949
	Output RPM	57	**29**	19	57	**29**	19	57	**29**	19	57	**29**	19	57	**29**	19
	Input Hp (max) **(C)**	64.38	**32.76**	21.70	84.99	**45.49**	30.14	107.24	**54.43**	36.06	84.19	**54.43**	36.06	88.33	**54.43**	36.06
60.99	Output torque, in-lb	71728	**71953**	71911	94695	**99924**	99865	119489	**119556**	119489	93801	**119556**	119489	98420	**119556**	119489
	OHL input shaft	**(A)**	**942**	991	**(A)**	**1415**	1582	**(A)**	**1869**	2227	**(A)**	**2206**	2299	**(A)**	**2580**	2796
	OHL output shaft **(B)**	19423	**18949**	18949	19423	**18949**	18949	19423	**18949**	18949	19423	**18949**	18949	19423	**18949**	18949
	Output RPM	51	**26**	17	51	**26**	17	51	**26**	17	51	**26**	17	51	**26**	17
	Input Hp (max) **(C)**	62.19	**32.76**	21.70	79.92	**43.58**	28.97	97.30	**49.38**	32.72	81.64	**49.38**	32.72	85.91	**49.38**	32.72
67.22	Output torque, in-lb	76364	**79304**	79257	98144	**105494**	105792	119489	**119556**	119489	100250	**119556**	119489	105496	**119556**	119489
	OHL input shaft	**(A)**	**949**	991	**(A)**	**1404**	1590	**(A)**	**1887**	2244	**(A)**	**2207**	2299	**(A)**	**2596**	2797
	OHL output shaft **(B)**	19423	**18949**	18949	19423	**18949**	18949	19423	**18949**	18949	19423	**18949**	18949	19423	**18949**	18949
	Output RPM	43	**22**	15	43	**22**	15	43	**22**	15	43	**22**	15	43	**22**	15
	Input Hp (max) **(C)**	59.33	**31.87**	21.45	74.14	**40.43**	26.87	82.29	**41.76**	27.67	77.92	**41.76**	27.67	82.29	**41.76**	27.67
79.49	Output torque, in-lb	86155	**91244**	92640	107662	**115740**	116056	119489	**119556**	119489	113149	**119556**	119489	119489	**119556**	119489
	OHL input shaft	**(A)**	**947**	990	**(A)**	**1385**	1590	**(A)**	**1914**	2271	**(A)**	**2208**	2300	**(A)**	**2623**	2798
	OHL output shaft **(B)**	19423	**18949**	18949	19423	**18949**	18949	19423	**18949**	18949	19423	**18949**	18949	19423	**18949**	18949
	Output RPM	38	**19**	13	38	**19**	13	38	**19**	13	38	**19**	13	38	**19**	13
	Input Hp (max) **(C)**	56.88	**30.56**	20.57	69.86	**36.64**	24.27	72.20	**36.64**	24.27	72.20	**36.64**	24.27	72.20	**36.64**	24.27
90.60	Output torque, in-lb	94148	**99711**	101254	115619	**119556**	119485	119489	**119556**	119489	119489	**119556**	119489	119489	**119556**	119489
	OHL input shaft	**(A)**	**952**	988	**(A)**	**1387**	1590	**(A)**	**1931**	2288	**(A)**	**2209**	2301	**(A)**	**2638**	2774
	OHL output shaft **(B)**	18949	**18949**	18949	18949	**18949**	18949	18949	**18949**	18949	18949	**18949**	18949	18949	**18949**	18949
	Output RPM	33	**17**	11	33	**17**	11	33	**17**	11	33	**17**	11	33	**17**	11
	Input Hp (max) **(C)**	53.58	**28.80**	19.38	62.79	**31.87**	21.11	62.79	**31.87**	21.11	62.79	**31.87**	21.11	62.79	**31.87**	21.11
104.18	Output torque, in-lb	101966	**108058**	109688	119489	**119556**	119485	119489	**119556**	119489	119489	**119556**	119489	119489	**119556**	119489
	OHL input shaft	**(A)**	**953**	987	**(A)**	**1403**	1590	**(A)**	**1948**	2304	**(A)**	**2191**	2284	**(A)**	**2652**	2772
	OHL output shaft **(B)**	18949	**18949**	18949	18949	**18949**	18949	18949	**18949**	18949	18949	**18949**	18949	18949	**18949**	18949
	Output RPM	29	**15**	10	29	**15**	10	29	**15**	10	29	**15**	10	29	**15**	10
	Input Hp (max) **(C)**	51.80	**27.84**	18.47	54.92	**27.88**	18.47	54.92	**27.88**	18.47	54.92	**27.88**	18.47	54.92	**27.88**	18.47
119.09	Output torque, in-lb	112697	**119422**	119485	119489	**119556**	119489	119489	**119556**	119489	119489	**119556**	119489	119489	**119556**	119489
	OHL input shaft	**(A)**	**951**	991	**(A)**	**1417**	1588	**(A)**	**1961**	2318	**(A)**	**2190**	2283	**(A)**	**2665**	2781
	OHL output shaft **(B)**	18949	**18949**	18949	18949	**18949**	18949	18949	**18949**	18949	18949	**18949**	18949	18949	**18949**	18949
	Output RPM	25	**13**	8	25	**13**	8	25	**13**	8	25	**13**	8	–	–	–
	Input Hp (max) **(C)**	47.40	**24.05**	15.94	47.40	**24.05**	15.94	47.40	**24.05**	15.94	47.40	**24.05**	15.94	–	–	–
138.01	Output torque, in-lb	119489	**119556**	119485	119489	**119556**	119489	119489	**119556**	119489	119489	**119556**	119489	–	–	–
	OHL input shaft	**(A)**	**954**	986	**(A)**	**1432**	1591	**(A)**	**1974**	2331	**(A)**	**2196**	2289	–	–	–
	OHL output shaft **(B)**	18949	**18949**	18949	18949	**18949**	18949	18949	**18949**	18949	18949	**18949**	18949	–	–	-
	Output RPM	23	**12**	8	23	**12**	8	23	**12**	8	23	**12**	8	–	–	–
	Input Hp (max) **(C)**	43.50	**22.08**	14.63	43.50	**22.08**	14.63	43.50	**22.08**	14.63	43.50	**22.08**	14.63	–	–	–
150.36	Output torque, in-lb	119489	**119556**	119489	119489	**119556**	119489	119489	**119556**	119489	119489	**119556**	119489	–	–	–
	OHL input shaft	**(A)**	**955**	994	**(A)**	**1439**	1593	**(A)**	**1980**	2337	**(A)**	**2200**	2293	–	–	–
	OHL output shaft **(B)**	18949	**18949**	18949	18949	**18949**	18949	18949	**18949**	18949	18949	**18949**	18949	–	–	–

Service factor: 1.0

(A) (B) (C) - See footnotes page on inside back cover

Blank areas (-) indicate configuration not available

RHB 168

Size: B_1683

Triple reduction – Clamp collar, three-piece coupled, separate

NEMA motor frame		210TC			250TC			280TC			320TC			360TC		
IEC motor frame		132D			160D			180D/200D			225D			250D		
Separate group		132			160			180			225			250		
Ratio	Output Rating data	3450	1750	1160	3450	1750	1160	3450	1750	1160	3450	1750	1160	3450	1750	1160
	Output RPM	21	**10**	7	21	**10**	7	21	**10**	7	–	–	–	–	–	–
	Input Hp (max) **(C)**	39.05	**19.82**	13.13	39.05	**19.82**	13.13	39.05	**19.82**	13.13	–	–	–	–	–	–
167.50	Output torque, in-lb	119489	**119556**	119489	119489	**119556**	119489	119489	**119556**	119489	–	–	–	–	–	–
	OHL input shaft	**(A)**	**956**	987	**(A)**	**1446**	1594	**(A)**	**1988**	2345	–	–	–	–	–	–
	OHL output shaft **(B)**	18949	**18949**	18949	18949	**18949**	18949	18949	**18949**	18949	–	–	–	–	–	–
	Output RPM	19	**10**	7	19	**10**	7	19	**10**	7	–	–	–	–	–	–
	Input Hp (max) **(C)**	36.86	**18.71**	12.40	36.86	**18.71**	12.40	36.86	**18.71**	12.40	–	–	–	–	–	–
177.43	Output torque, in-lb	119489	**119556**	119489	119489	**119556**	119489	119489	**119556**	119489	–	–	–	–	–	–
	OHL input shaft	**(A)**	**948**	988	**(A)**	**1450**	1595	**(A)**	**1992**	2349	–	–	–	–	–	–
	OHL output shaft **(B)**	18949	**18949**	18949	18949	**18949**	18949	18949	**18949**	18949	–	–	–	–	–	–
	Output RPM	17	**9**	6	17	**9**	6	–	–	–	–	–	–	–	–	–
	Input Hp (max) **(C)**	32.78	**16.64**	11.02	32.78	**16.64**	11.02	–	–	–	–	–	–	–	–	–
199.54	Output torque, in-lb	119489	**119556**	119489	119489	**119556**	119489	–	–	–	–	–	–	–	–	–
	OHL input shaft	**(A)**	**951**	991	**(A)**	**1444**	1595	–	–	–	–	–	–	–	–	–
	OHL output shaft **(B)**	18949	**18949**	18949	18949	**18949**	18949	–	–	–	–	–	–	–	–	–
	Output RPM	16	**8**	5	16	**8**	5	–	–	–	–	–	–	–	–	–
	Input Hp (max) **(C)**	30.66	**15.56**	10.31	30.66	**15.56**	10.31	–	–	–	–	–	–	–	–	–
213.33	Output torque, in-lb	119489	**119556**	119489	119489	**119556**	119489	–	–	–	–	–	–	–	–	–
	OHL input shaft	**(A)**	**952**	988	**(A)**	**1448**	1596	–	–	–	–	–	–	–	–	–
	OHL output shaft **(B)**	18949	**18949**	18949	18949	**18949**	18949	–	–	–	–	–	–	–	–	–
	Output RPM	15	**8**	5	–	–	–	–	–	–	–	–	–	–	–	–
	Input Hp (max) **(C)**	28.92	**14.68**	9.72	–	–	–	–	–	–	–	–	–	–	–	–
226.15	Output torque, in-lb	119489	**119556**	119489	–	–	–	–	–	–	–	–	–	–	–	–
	OHL input shaft	**(A)**	**949**	989	–	–	–	–	–	–	–	–	–	–	–	–
	OHL output shaft **(B)**	18949	**18949**	18949	–	–	–	–	–	–	–	–	–	–	–	–
	Output RPM	14	**7**	5	–	–	–	–	–	–	–	–	–	–	–	–
	Input Hp (max) **(C)**	26.83	**13.62**	9.02	–	–	–	–	–	–	–	–	–	–	–	–
243.80	Output torque, in-lb	119489	**119556**	119489	–	–	–	–	–	–	–	–	–	–	–	–
	OHL input shaft	**(A)**	**951**	991	–	–	–	–	–	–	–	–	–	–	–	–
	OHL output shaft **(B)**	18949	**18949**	18949	–	–	–	–	–	–	–	–	–	–	–	–
	Output RPM	13	**7**	4	–	–	–	–	–	–	–	–	–	–	–	–
	Input Hp (max) **(C)**	24.76	**12.57**	8.32	–	–	–	–	–	–	–	–	–	–	–	–
264.18	Output torque, in-lb	119489	**119556**	119485	–	–	–	–	–	–	–	–	–	–	–	–
	OHL input shaft	**(A)**	**952**	995	–	–	–	–	–	–	–	–	–	–	–	–
	OHL output shaft **(B)**	18949	**18949**	18949	–	–	–	–	–	–	–	–	–	–	–	–
	Output RPM	12	**6**	4	–	–	–	–	–	–	–	–	–	–	–	–
	Input Hp (max) **(C)**	18.82	**10.11**	6.81	–	–	–	–	–	–	–	–	–	–	–	–
287.95	Output torque, in-lb	98985	**104886**	106497	–	–	–	–	–	–	–	–	–	–	–	–
	OHL input shaft	**(A)**	**957**	989	–	–	–	–	–	–	–	–	–	–	–	–
	OHL output shaft **(B)**	18949	**18949**	18949	–	–	–	–	–	–	–	–	–	–	–	–

Service factor: 1.0

(A) (B) (C) - See footnotes page on inside back cover

Blank areas (-) indicate configuration not available

RHB 168

Size: B_1684

Four-stage reduction – Clamp collar, three-piece coupled, separate

NEMA motor frame		56C			—			140TC			180TC			—			210TC		
IEC motor frame		71D			80D			90D			100D			112D			132D		
Separate group		71			80			90			100			112			132		
Ratio	Output Rating data	3450	1750	1160	3450	1750	1160	3450	1750	1160	3450	1750	1160	3450	1750	1160	3450	1750	1160
	Output RPM	10.72	**5.44**	3.60	10.72	**5.44**	3.60	10.72	**5.44**	3.60	10.72	**5.44**	3.60	10.72	**5.44**	3.60	10.72	**5.44**	3.60
	Input Hp (max) **(C)**	3.98	**2.02**	1.34	4.85	**2.46**	1.63	9.58	**4.86**	3.22	17.59	**8.92**	5.91	20.33	**10.31**	6.84	20.33	**10.31**	6.84
321.92	Output torque, in-lb	23406	**23419**	23437	28522	**28520**	28509	56338	**56345**	56319	103443	**103415**	103368	119556	**119556**	119556	119556	**119556**	119556
	OHL input shaft	(A)	**(A)**	(A)	(A)	**(A)**	(A)	(A)	**(A)**	(A)	**(A)**	**(A)**	(A)	**(A)**	**(A)**	(A)	**(A)**	**(A)**	(A)
	OHL output shaft **(B)**	18949	**18949**	18949	18949	**18949**	18949	18949	**18949**	18949	**18949**	**18949**	18949	**18949**	**18949**	18949	**18949**	**18949**	18949
	Output RPM	9.38	**4.76**	3.15	9.38	**4.76**	3.15	9.38	**4.76**	3.15	9.38	**4.76**	3.15	9.38	**4.76**	3.15	9.38	**4.76**	3.15
	Input Hp (max) **(C)**	3.98	**2.02**	1.34	4.85	**2.46**	1.63	9.58	**4.86**	3.22	17.59	**8.92**	5.91	17.78	**9.02**	5.98	17.78	**9.02**	5.98
367.99	Output torque, in-lb	26755	**26771**	26791	32604	**32602**	32589	64401	**64409**	64379	118248	**118215**	118162	119556	**119556**	119556	119556	**119556**	119556
	OHL input shaft	(A)	**(A)**	(A)	(A)	**(A)**	(A)	(A)	**(A)**	(A)	**(A)**	**(A)**	(A)	**(A)**	**(A)**	(A)	**(A)**	**(A)**	(A)
	OHL output shaft **(B)**	18949	**18949**	18949	18949	**18949**	18949	18949	**18949**	18949	**18949**	**18949**	18949	**18949**	**18949**	18949	**18949**	**18949**	18949
	Output RPM	8.40	**4.26**	2.82	8.40	**4.26**	2.82	8.40	**4.26**	2.82	8.40	**4.26**	2.82	8.40	**4.26**	2.82	8.40	**4.26**	2.82
	Input Hp (max) **(C)**	3.98	**2.02**	1.34	4.85	**2.46**	1.63	9.17	**4.65**	3.08	15.93	**8.08**	5.36	15.93	**8.08**	5.36	15.93	**8.08**	5.36
410.86	Output torque, in-lb	29872	**29890**	29913	36402	**36400**	36386	68827	**68805**	68754	119556	**119556**	119556	119556	**119556**	119556	119556	**119556**	119556
	OHL input shaft	(A)	**(A)**	(A)	**(A)**	**(A)**	(A)	**(A)**	**(A)**	(A)	**(A)**	**(A)**	(A)	**(A)**	**(A)**	(A)	**(A)**	**(A)**	(A)
	OHL output shaft **(B)**	18949	**18949**	18949	**18949**	**18949**	18949	**18949**	**18949**	18949	**18949**	**18949**	18949	**18949**	**18949**	18949	**18949**	**18949**	18949
	Output RPM	7.25	**3.68**	2.44	7.25	**3.68**	2.44	7.25	**3.68**	2.44	7.25	**3.68**	2.44	7.25	**3.68**	2.44	7.25	**3.68**	2.44
	Input Hp (max) **(C)**	3.98	**2.02**	1.34	4.85	**2.46**	1.63	9.17	**4.65**	3.08	13.75	**6.97**	4.62	13.75	**6.97**	4.62	13.75	**6.97**	4.62
476.13	Output torque, in-lb	34618	**34638**	34665	42186	**42183**	42167	79761	**79737**	79677	119556	**119556**	119556	119556	**119556**	119556	119556	**119556**	119556
	OHL input shaft	(A)	**(A)**	(A)	**(A)**	**(A)**	(A)	**(A)**	**(A)**	(A)	**(A)**	**(A)**	(A)	**(A)**	**(A)**	(A)	**(A)**	**(A)**	(A)
	OHL output shaft **(B)**	18949	**18949**	18949	18949	**18949**	18949	18949	**18949**	18949	18949	**18949**	18949	18949	**18949**	18949	18949	**18949**	18949
	Output RPM	6.65	**3.37**	2.24	6.65	**3.37**	2.24	6.65	**3.37**	2.24	6.65	**3.37**	2.24	6.65	**3.37**	2.24	6.65	**3.37**	2.24
	Input Hp (max) **(C)**	3.98	**2.02**	1.34	4.85	**2.46**	1.63	9.17	**4.65**	3.08	12.62	**6.40**	4.24	12.62	**6.40**	4.24	12.62	**6.40**	4.24
518.74	Output torque, in-lb	37716	**37738**	37767	45961	**45958**	45940	86899	**86872**	86807	119556	**119556**	119556	119556	**119556**	119556	119556	**119556**	119556
	OHL input shaft	(A)	**(A)**	(A)	(A)	**(A)**	(A)	(A)	**(A)**	(A)	**(A)**	**(A)**	(A)	**(A)**	**(A)**	(A)	**(A)**	**(A)**	(A)
	OHL output shaft **(B)**	18949	**18949**	18949	18949	**18949**	18949	18949	**18949**	18949	18949	**18949**	18949	18949	**18949**	18949	18949	**18949**	18949
	Output RPM	6.29	**3.19**	2.12	6.29	**3.19**	2.12	6.29	**3.19**	2.12	6.29	**3.19**	2.12	6.29	**3.19**	2.12	6.29	**3.19**	2.12
	Input Hp (max) **(C)**	3.98	**2.02**	1.34	4.85	**2.46**	1.63	9.58	**4.86**	3.22	11.94	**6.05**	4.01	11.94	**6.05**	4.01	11.94	**6.05**	4.01
548.26	Output torque, in-lb	39862	**39885**	39916	48576	**48573**	48554	95950	**95961**	95917	119556	**119556**	119556	119556	**119556**	119556	119556	**119556**	119556
	OHL input shaft	(A)	**(A)**	(A)	(A)	**(A)**	(A)	(A)	**(A)**	(A)	**(A)**	**(A)**	(A)	**(A)**	**(A)**	(A)	**(A)**	**(A)**	(A)
	OHL output shaft **(B)**	18949	**18949**	18949	18949	**18949**	18949	18949	**18949**	18949	18949	**18949**	18949	18949	**18949**	18949	18949	**18949**	18949
	Output RPM	5.59	**2.84**	1.88	5.59	**2.84**	1.88	5.59	**2.84**	1.88	5.59	**2.84**	1.88	5.59	**2.84**	1.88	5.59	**2.84**	1.88
	Input Hp (max) **(C)**	3.80	**1.93**	1.28	4.85	**2.46**	1.63	6.96	**3.53**	2.34	10.61	**5.38**	3.57	10.61	**5.38**	3.57	10.61	**5.38**	3.57
616.75	Output torque, in-lb	42814	**42868**	42891	54644	**54641**	54620	78417	**78407**	78411	119556	**119556**	119556	119556	**119556**	119556	119556	**119556**	119556
	OHL input shaft	(A)	**(A)**	(A)	**(A)**	**(A)**	(A)	**(A)**	**(A)**	(A)	**(A)**	**(A)**	(A)	**(A)**	**(A)**	(A)	**(A)**	**(A)**	(A)
	OHL output shaft **(B)**	18949	**18949**	18949	18949	**18949**	18949	18949	**18949**	18949	18949	**18949**	18949	18949	**18949**	18949	18949	**18949**	18949
	Output RPM	4.89	**2.48**	1.65	4.89	**2.48**	1.65	4.89	**2.48**	1.65	4.89	**2.48**	1.65	4.89	**2.48**	1.65	4.89	**2.48**	1.65
	Input Hp (max) **(C)**	3.80	**1.93**	1.28	4.85	**2.46**	1.63	6.96	**3.53**	2.34	9.28	**4.71**	3.12	9.28	**4.71**	3.12	9.28	**4.71**	3.12
705.01	Output torque, in-lb	48941	**49004**	49030	62464	**62461**	62437	89640	**89629**	89633	119556	**119556**	119556	119556	**119556**	119556	119556	**119556**	119556
	OHL input shaft	(A)	**(A)**	(A)	**(A)**	**(A)**	(A)	**(A)**	**(A)**	(A)	**(A)**	**(A)**	(A)	**(A)**	**(A)**	(A)	**(A)**	**(A)**	(A)
	OHL output shaft **(B)**	18949	**18949**	18949	18949	**18949**	18949	18949	**18949**	18949	18949	**18949**	18949	18949	**18949**	18949	18949	**18949**	18949
	Output RPM	4.32	**2.19**	1.45	4.32	**2.19**	1.45	4.32	**2.19**	1.45	4.32	**2.19**	1.45	4.32	**2.19**	1.45	4.32	**2.19**	1.45
	Input Hp (max) **(C)**	3.98	**2.02**	1.34	4.85	**2.46**	1.63	8.20	**4.16**	2.76	8.20	**4.16**	2.76	8.20	**4.16**	2.76	8.20	**4.16**	2.76
797.85	Output torque, in-lb	58010	**58043**	58088	70690	**70686**	70659	119556	**119556**	119556	119556	**119556**	119556	119556	**119556**	119556	119556	**119556**	119556
	OHL input shaft	(A)	**(A)**	(A)	**(A)**	**(A)**	(A)	**(A)**	**(A)**	(A)	**(A)**	**(A)**	(A)	**(A)**	**(A)**	(A)	**(A)**	**(A)**	(A)
	OHL output shaft **(B)**	18949	**18949**	18949	18949	**18949**	18949	18949	**18949**	18949	18949	**18949**	18949	18949	**18949**	18949	18949	**18949**	18949
	Output RPM	3.84	**1.95**	1.29	3.84	**1.95**	1.29	3.84	**1.95**	1.29	3.84	**1.95**	1.29	3.84	**1.95**	1.29	3.84	**1.95**	1.29
	Input Hp (max) **(C)**	3.98	**2.02**	1.34	4.85	**2.46**	1.63	7.29	**3.70**	2.45	7.29	**3.70**	2.45	7.29	**3.70**	2.45	7.29	**3.70**	2.45
897.80	Output torque, in-lb	65276	**65314**	65364	79545	**79541**	79510	119556	**119556**	119556	119556	**119556**	119556	119556	**119556**	119556	119556	**119556**	119556
	OHL input shaft	**(A)**	**(A)**	(A)	**(A)**	**(A)**	(A)	**(A)**	**(A)**	(A)	**(A)**	**(A)**	(A)	**(A)**	**(A)**	(A)	**(A)**	**(A)**	(A)
	OHL output shaft **(B)**	18949	**18949**	18949	18949	**18949**	18949	18949	**18949**	18949	18949	**18949**	18949	18949	**18949**	18949	18949	**18949**	18949
	Output RPM	3.35	**1.70**	1.12	3.35	**1.70**	1.12	3.35	**1.70**	1.12	3.35	**1.70**	1.12	3.35	**1.70**	1.12	3.35	**1.70**	1.12
	Input Hp (max) **(C)**	3.98	**2.02**	1.34	4.85	**2.46**	1.63	6.35	**3.22**	2.13	6.35	**3.22**	2.13	6.35	**3.22**	2.13	6.35	**3.22**	2.13
1031.24	Output torque, in-lb	74979	**75022**	75079	91369	**91363**	91328	119556	**119556**	119556	119556	**119556**	119556	119556	**119556**	119556	119556	**119556**	119556
	OHL input shaft	**(A)**	**(A)**	(A)	**(A)**	**(A)**	(A)	**(A)**	**(A)**	(A)	**(A)**	**(A)**	(A)	**(A)**	**(A)**	(A)	**(A)**	**(A)**	(A)
	OHL output shaft **(B)**	18949	**18949**	18949	18949	**18949**	18949	18949	**18949**	18949	18949	**18949**	18949	18949	**18949**	18949	18949	**18949**	18949

Service factor: 1.0

(A) (B) (C) - See footnotes page on inside back cover

Blank areas (-) indicate configuration not available

RHB 168

Size: B_1684

Four-stage reduction – Clamp collar, three-piece coupled, separate

NEMA motor frame		56C			—			140TC			180TC			—			210TC		
IEC motor frame		71D			80D			90D			100D			112D			132D		
Separate group		71			80			90			100			112			132		
Ratio	Output Rating data	3450	1750	1160	3450	1750	1160	3450	1750	1160	3450	1750	1160	3450	1750	1160	3450	1750	1160
	Output RPM	2.92	**1.48**	0.98	2.92	**1.48**	0.98	2.92	**1.48**	0.98	2.92	**1.48**	0.98	2.92	**1.48**	0.98	2.92	**1.48**	0.98
	Input Hp (max) **(C)**	3.80	**1.93**	1.28	4.85	**2.46**	1.63	5.54	**2.81**	1.86	5.54	**2.81**	1.86	5.54	**2.81**	1.86	5.54	**2.81**	1.86
1181.28	Output torque, in-lb	82003	**82108**	82152	104662	**104655**	104615	119556	**119556**	119556	119556	**119556**	119556	119556	**119556**	119556	119556	**119556**	119556
	OHL input shaft	(A)	**(A)**	(A)	(A)	**(A)**	(A)	(A)	**(A)**	(A)	(A)	**(A)**	(A)	(A)	**(A)**	(A)	(A)	**(A)**	(A)
	OHL output shaft **(B)**	18949	**18949**	18949	18949	**18949**	18949	18949	**18949**	18949	18949	**18949**	18949	18949	**18949**	18949	18949	**18949**	18949
	Output RPM	2.58	**1.31**	0.87	2.58	**1.31**	0.87	2.58	**1.31**	0.87	2.58	**1.31**	0.87	2.58	**1.31**	0.87	2.58	**1.31**	0.87
	Input Hp (max) **(C)**	3.80	**1.93**	1.28	4.85	**2.46**	1.63	4.89	**2.48**	1.64	4.89	**2.48**	1.64	4.89	**2.48**	1.64	4.89	**2.48**	1.64
1338.81	Output torque, in-lb	92938	**93057**	93107	118619	**118612**	118566	119556	**119556**	119556	119556	**119556**	119556	119556	**119556**	119556	119556	**119556**	119556
	OHL input shaft	(A)	**(A)**	(A)	(A)	**(A)**	(A)	(A)	**(A)**	(A)	(A)	**(A)**	(A)	(A)	**(A)**	(A)	(A)	**(A)**	(A)
	OHL output shaft **(B)**	18949	**18949**	18949	18949	**18949**	18949	18949	**18949**	18949	18949	**18949**	18949	18949	**18949**	18949	18949	**18949**	18949
	Output RPM	2.24	**1.13**	0.75	2.24	**1.13**	0.75	2.24	**1.13**	0.75	2.24	**1.13**	0.75	2.24	**1.13**	0.75	–	**–**	–
	Input Hp (max) **(C)**	3.41	**1.73**	1.15	4.24	**2.15**	1.43	4.24	**2.15**	1.43	4.24	**2.15**	1.43	4.24	**2.15**	1.43	–	**–**	–
1542.38	Output Torque, In–Lb	96081	**96097**	96370	119556	**119556**	119556	119556	**119556**	119556	119556	**119556**	119556	119556	**119556**	119556	–	**–**	–
	OHL input shaft	(A)	**(A)**	(A)	(A)	**(A)**	(A)	(A)	**(A)**	(A)	(A)	**(A)**	(A)	(A)	**(A)**	(A)	–	**–**	–
	OHL output shaft **(B)**	18949	**18949**	18949	18949	**18949**	18949	18949	**18949**	18949	18949	**18949**	18949	18949	**18949**	18949	–	**–**	–
	Output RPM	1.96	**0.99**	0.66	1.96	**0.99**	0.66	1.96	**0.99**	0.66	1.96	**0.99**	0.66	–	**–**	–	–	**–**	–
	Input Hp (max) **(C)**	3.06	**1.55**	1.03	3.72	**1.89**	1.25	3.72	**1.89**	1.25	3.72	**1.89**	1.25	–	**–**	–	–	**–**	–
1759.94	Output torque, in-lb	98382	**98244**	98490	119556	**119556**	119556	119556	**119556**	119556	119556	**119556**	119556	–	**–**	–	–	**–**	–
	OHL input shaft	(A)	**(A)**	(A)	(A)	**(A)**	(A)	(A)	**(A)**	(A)	(A)	**(A)**	(A)	–	**–**	–	–	**–**	–
	OHL output shaft **(B)**	18949	**18949**	18949	18949	**18949**	18949	18949	**18949**	18949	18949	**18949**	18949	–	**–**	–	–	**–**	–
	Output RPM	1.79	**0.91**	0.60	1.79	**0.91**	0.60	1.79	**0.91**	0.60	1.79	**0.91**	0.60	1.79	**0.91**	0.60	–	**–**	–
	Input Hp (max) **(C)**	3.25	**1.65**	1.09	3.39	**1.72**	1.14	3.39	**1.72**	1.14	3.39	**1.72**	1.14	3.39	**1.72**	1.14	–	**–**	–
1930.90	Output torque, in-lb	114640	**114741**	114351	119556	**119556**	119556	119556	**119556**	119556	119556	**119556**	119556	119556	**119556**	119556	–	**–**	–
	OHL input shaft	(A)	**(A)**	(A)	(A)	**(A)**	(A)	(A)	**(A)**	(A)	(A)	**(A)**	(A)	(A)	**(A)**	(A)	–	**–**	–
	OHL output shaft **(B)**	18949	**18949**	18949	18949	**18949**	18949	18949	**18949**	18949	18949	**18949**	18949	18949	**18949**	18949	–	**–**	–
	Output RPM	1.51	**0.77**	0.51	1.51	**0.77**	0.51	1.51	**0.77**	0.51	–	**–**	–	–	**–**	–	–	**–**	–
	Input Hp (max) **(C)**	2.82	**1.43**	0.95	2.87	**1.46**	0.97	2.87	**1.46**	0.97	–	**–**	–	–	**–**	–	–	**–**	–
2279.59	Output torque, in-lb	117436	**117400**	117662	119556	**119556**	119556	119556	**119556**	119556	–	**–**	–	–	**–**	–	–	**–**	–
	OHL input shaft	(A)	**(A)**	(A)	(A)	**(A)**	(A)	(A)	**(A)**	(A)	–	**–**	–	–	**–**	–	–	**–**	–
	OHL output shaft **(B)**	18949	**18949**	18949	18949	**18949**	18949	18949	**18949**	18949	–	**–**	–	–	**–**	–	–	**–**	–
	Output RPM	1.30	**0.66**	0.44	1.30	**0.66**	0.44	1.30	**0.66**	0.44	–	**–**	–	–	**–**	–	–	**–**	–
	Input Hp (max) **(C)**	2.44	**1.24**	0.82	2.47	**1.25**	0.83	2.47	**1.25**	0.83	–	**–**	–	–	**–**	–	–	**–**	–
2645.29	Output torque, in-lb	117912	**118133**	117853	119556	**119556**	119556	119556	**119556**	119556	–	**–**	–	–	**–**	–	–	**–**	–
	OHL input shaft	(A)	**(A)**	(A)	(A)	**(A)**	(A)	(A)	**(A)**	(A)	–	**–**	–	–	**–**	–	–	**–**	–
	OHL output shaft **(B)**	18949	**18949**	18949	18949	**18949**	18949	18949	**18949**	18949	–	**–**	–	–	**–**	–	–	**–**	–
	Output RPM	1.14	**0.58**	0.38	1.14	**0.58**	0.38	1.14	**0.58**	0.38	–	**–**	–	–	**–**	–	–	**–**	–
	Input Hp (max) **(C)**	2.16	**1.10**	0.73	2.16	**1.10**	0.73	2.16	**1.10**	0.73	–	**–**	–	–	**–**	–	–	**–**	–
3023.12	Output torque, in-lb	119556	**119556**	119556	119556	**119556**	119556	119556	**119556**	119556	–	**–**	–	–	**–**	–	–	**–**	–
	OHL input shaft	(A)	**(A)**	(A)	(A)	**(A)**	(A)	(A)	**(A)**	(A)	–	**–**	–	–	**–**	–	–	**–**	–
	OHL output shaft **(B)**	18949	**18949**	18949	18949	**18949**	18949	18949	**18949**	18949	–	**–**	–	–	**–**	–	–	**–**	–

Service factor: 1.0

(A) (B) (C) - See footnotes page on inside back cover

Blank areas (-) indicate configuration not available

RHB 168

Size: B_1685

Five-stage reduction – Clamp collar, three-piece coupled, separate

NEMA motor frame		56C			—			140TC			180TC			—			210TC		
IEC motor frame		71D			80D			90D			100D			112D			132D		
Separate group		71			80			90			100			112			132		
Ratio	Output Rating data	3450	1750	1160	3450	1750	1160	3450	1750	1160	3450	1750	1160	3450	1750	1160	3450	1750	1160
	Output RPM	1.32	**0.67**	0.44	1.32	**0.67**	0.44	1.32	**0.67**	0.44	1.32	**0.67**	0.44	1.32	**0.67**	0.44	1.32	**0.67**	0.44
	Input Hp (max) **(C)**	2.50	**1.27**	0.84	2.50	**1.27**	0.84	2.50	**1.27**	0.84	2.50	**1.27**	0.84	2.50	**1.27**	0.84	2.50	**1.27**	0.84
2615.32	Output torque, in-lb	119556	**119556**	119556	119556	**119556**	119556	119556	**119556**	119556	119556	**119556**	119556	119556	**119556**	119556	119556	**119556**	119556
	OHL input shaft	(A)	**(A)**	(A)	(A)	**(A)**	(A)	(A)	**(A)**	(A)	**(A)**	**(A)**	(A)	**(A)**	**(A)**	(A)	**(A)**	**(A)**	(A)
	OHL output shaft **(B)**	18949	**18949**	18949	18949	**18949**	18949	18949	**18949**	18949	**18949**	**18949**	18949	**18949**	**18949**	18949	**18949**	**18949**	18949
	Output RPM	1.15	**0.58**	0.39	1.15	**0.58**	0.39	1.15	**0.58**	0.39	1.15	**0.58**	0.39	1.15	**0.58**	0.39	1.15	**0.58**	0.39
	Input Hp (max) **(C)**	2.18	**1.11**	0.73	2.18	**1.11**	0.73	2.18	**1.11**	0.73	2.18	**1.11**	0.73	2.18	**1.11**	0.73	2.18	**1.11**	0.73
3003.10	Output torque, in-lb	119556	**119556**	119556	119556	**119556**	119556	119556	**119556**	119556	119556	**119556**	119556	119556	**119556**	119556	119556	**119556**	119556
	OHL input shaft	(A)	**(A)**	(A)	(A)	**(A)**	(A)	(A)	**(A)**	(A)	**(A)**	**(A)**	(A)	**(A)**	**(A)**	(A)	**(A)**	**(A)**	(A)
	OHL output shaft **(B)**	18949	**18949**	18949	18949	**18949**	18949	18949	**18949**	18949	**18949**	**18949**	18949	**18949**	**18949**	18949	**18949**	**18949**	18949
	Output RPM	1.03	**0.52**	0.35	1.03	**0.52**	0.35	1.03	**0.52**	0.35	1.03	**0.52**	0.35	1.03	**0.52**	0.35	1.03	**0.52**	0.35
	Input Hp (max) **(C)**	1.96	**1.00**	0.66	1.96	**1.00**	0.66	1.96	**1.00**	0.66	1.96	**1.00**	0.66	1.96	**1.00**	0.66	1.96	**1.00**	0.66
3333.45	Output torque, in-lb	119556	**119556**	119556	119556	**119556**	119556	119556	**119556**	119556	119556	**119556**	119556	119556	**119556**	119556	119556	**119556**	119556
	OHL input shaft	(A)	**(A)**	(A)	**(A)**	**(A)**	(A)	**(A)**	**(A)**	(A)	**(A)**	**(A)**	(A)	**(A)**	**(A)**	(A)	**(A)**	**(A)**	(A)
	OHL output shaft **(B)**	18949	**18949**	18949	**18949**	**18949**	18949	**18949**	**18949**	18949	**18949**	**18949**	18949	**18949**	**18949**	18949	**18949**	**18949**	18949
	Output RPM	0.89	**0.45**	0.30	0.89	**0.45**	0.30	0.89	**0.45**	0.30	0.89	**0.45**	0.30	0.89	**0.45**	0.30	0.89	**0.45**	0.30
	Input Hp (max) **(C)**	1.68	**0.85**	0.57	1.68	**0.85**	0.57	1.68	**0.85**	0.57	1.68	**0.85**	0.57	1.68	**0.85**	0.57	1.68	**0.85**	0.57
3894.01	Output torque, in-lb	119556	**119556**	119556	119556	**119556**	119556	119556	**119556**	119556	119556	**119556**	119556	119556	**119556**	119556	119556	**119556**	119556
	OHL input shaft	(A)	**(A)**	(A)	**(A)**	**(A)**	(A)	**(A)**	**(A)**	(A)	**(A)**	**(A)**	(A)	**(A)**	**(A)**	(A)	**(A)**	**(A)**	(A)
	OHL output shaft **(B)**	18949	**18949**	18949	18949	**18949**	18949	18949	**18949**	18949	18949	**18949**	18949	18949	**18949**	18949	18949	**18949**	18949
	Output RPM	0.77	**0.39**	0.26	0.77	**0.39**	0.26	0.77	**0.39**	0.26	0.77	**0.39**	0.26	0.77	**0.39**	0.26	–	**–**	–
	Input Hp (max) **(C)**	1.46	**0.74**	0.49	1.46	**0.74**	0.49	1.46	**0.74**	0.49	1.46	**0.74**	0.49	1.46	**0.74**	0.49	–	**–**	–
4496.84	Output torque, in-lb	119556	**119556**	119556	119556	**119556**	119556	119556	**119556**	119556	119556	**119556**	119556	119556	**119556**	119556	–	**–**	–
	OHL input shaft	(A)	**(A)**	(A)	(A)	**(A)**	(A)	(A)	**(A)**	(A)	**(A)**	**(A)**	(A)	**(A)**	**(A)**	(A)	**–**	**–**	–
	OHL output shaft **(B)**	18949	**18949**	18949	18949	**18949**	18949	18949	**18949**	18949	18949	**18949**	18949	18949	**18949**	18949	–	**–**	–
	Output RPM	0.69	**0.35**	0.23	0.69	**0.35**	0.23	0.69	**0.35**	0.23	0.69	**0.35**	0.23	0.69	**0.35**	0.23	0.69	**0.35**	0.23
	Input Hp (max) **(C)**	1.30	**0.66**	0.44	1.30	**0.66**	0.44	1.30	**0.66**	0.44	1.30	**0.66**	0.44	1.30	**0.66**	0.44	1.30	**0.66**	0.44
5019.65	Output torque, in-lb	119556	**119556**	119556	119556	**119556**	119556	119556	**119556**	119556	119556	**119556**	119556	119556	**119556**	119556	119556	**119556**	119556
	OHL input shaft	(A)	**(A)**	(A)	(A)	**(A)**	(A)	(A)	**(A)**	(A)	**(A)**	**(A)**	(A)	**(A)**	**(A)**	(A)	**(A)**	**(A)**	(A)
	OHL output shaft **(B)**	18949	**18949**	18949	18949	**18949**	18949	18949	**18949**	18949	18949	**18949**	18949	18949	**18949**	18949	18949	**18949**	18949
	Output RPM	0.59	**0.30**	0.20	0.59	**0.30**	0.20	0.59	**0.30**	0.20	0.59	**0.30**	0.20	–	**–**	–	–	**–**	–
	Input Hp (max) **(C)**	1.13	**0.57**	0.38	1.13	**0.57**	0.38	1.13	**0.57**	0.38	1.13	**0.57**	0.38	–	**–**	–	–	**–**	–
5804.70	Output Torque, In–Lb	119556	**119556**	119556	119556	**119556**	119556	119556	**119556**	119556	119556	**119556**	119556	–	**–**	–	–	**–**	–
	OHL input shaft	(A)	**(A)**	(A)	**(A)**	**(A)**	(A)	**(A)**	**(A)**	(A)	**(A)**	**(A)**	(A)	**–**	**–**	–	**–**	**–**	–
	OHL output shaft **(B)**	18949	**18949**	18949	18949	**18949**	18949	18949	**18949**	18949	18949	**18949**	18949	–	**–**	–	–	**–**	–
	Output RPM	0.53	**0.27**	0.18	0.53	**0.27**	0.18	0.53	**0.27**	0.18	0.53	**0.27**	0.18	0.53	**0.27**	0.18	0.53	**0.27**	0.18
	Input Hp (max) **(C)**	1.00	**0.51**	0.34	1.00	**0.51**	0.34	1.00	**0.51**	0.34	1.00	**0.51**	0.34	1.00	**0.51**	0.34	1.00	**0.51**	0.34
6527.90	Output torque, in-lb	119556	**119556**	119556	119556	**119556**	119556	119556	**119556**	119556	119556	**119556**	119556	119556	**119556**	119556	119556	**119556**	119556
	OHL input shaft	(A)	**(A)**	(A)	**(A)**	**(A)**	(A)	**(A)**	**(A)**	(A)	**(A)**	**(A)**	(A)	**(A)**	**(A)**	(A)	**(A)**	**(A)**	(A)
	OHL output shaft **(B)**	18949	**18949**	18949	18949	**18949**	18949	18949	**18949**	18949	18949	**18949**	18949	18949	**18949**	18949	18949	**18949**	18949
	Output RPM	0.50	**0.25**	0.17	0.50	**0.25**	0.17	0.50	**0.25**	0.17	0.50	**0.25**	0.17	0.50	**0.25**	0.17	0.50	**0.25**	0.17
	Input Hp (max) **(C)**	0.95	**0.48**	0.32	0.95	**0.48**	0.32	0.95	**0.48**	0.32	0.95	**0.48**	0.32	0.95	**0.48**	0.32	0.95	**0.48**	0.32
6920.19	Output torque, in-lb	119556	**119556**	119556	119556	**119556**	119556	119556	**119556**	119556	119556	**119556**	119556	119556	**119556**	119556	119556	**119556**	119556
	OHL input shaft	(A)	**(A)**	(A)	**(A)**	**(A)**	(A)	**(A)**	**(A)**	(A)	**(A)**	**(A)**	(A)	**(A)**	**(A)**	(A)	**(A)**	**(A)**	(A)
	OHL output shaft **(B)**	18949	**18949**	18949	18949	**18949**	18949	18949	**18949**	18949	18949	**18949**	18949	18949	**18949**	18949	18949	**18949**	18949
	Output RPM	0.46	**0.23**	0.16	0.46	**0.23**	0.16	0.46	**0.23**	0.16	0.46	**0.23**	0.16	0.46	**0.23**	0.16	0.46	**0.23**	0.16
	Input Hp (max) **(C)**	0.88	**0.44**	0.29	0.88	**0.44**	0.29	0.88	**0.44**	0.29	0.88	**0.44**	0.29	0.88	**0.44**	0.29	0.88	**0.44**	0.29
7463.09	Output torque, in-lb	119556	**119556**	119556	119556	**119556**	119556	119556	**119556**	119556	119556	**119556**	119556	119556	**119556**	119556	119556	**119556**	119556
	OHL input shaft	**(A)**	**(A)**	(A)	**(A)**	**(A)**	(A)	**(A)**	**(A)**	(A)	**(A)**	**(A)**	(A)	**(A)**	**(A)**	(A)	**(A)**	**(A)**	(A)
	OHL output shaft **(B)**	18949	**18949**	18949	18949	**18949**	18949	18949	**18949**	18949	18949	**18949**	18949	18949	**18949**	18949	18949	**18949**	18949

Service factor: 1.0

(A) (B) (C) - See footnotes page on inside back cover

Blank areas (-) indicate configuration not available

RHB Integral Gearmotors - 60 Hz

1750 RPM – 60 Hz

Input power (Hp)	Speed (RPM)	Ratio	OHL (LBF) (B)	Output torque (in-lb)	Gear stage	Service factor (SF)	Catalog number
	65	26.90	726	242	3	7.03	
	55	31.59	926	284	3	7.79	
	48	36.69	926	330	3	6.71	
	44	39.73	926	358	3	6.18	
	39	44.94	1150	405	3	5.46	
	35	49.38	1150	445	3	4.97	
	32	54.47	1150	490	3	4.52	
	29	60.33	1150	543	3	4.08	
	26	67.18	1150	605	3	3.66	**B_383GH71C4**
	23	77.09	1411	694	3	3.19	
	21	85.33	1411	768	3	2.88	
	18	97.05	1411	874	3	2.53	
	16	110.75	1411	997	3	2.22	
	14	124.78	1411	1123	3	1.97	
	13	139.43	1411	1255	3	1.76	
	11	159.04	1411	1432	3	1.55	
	10	179.13	1411	1613	3	1.37	
	64	27.55	1149	248	3	7.35	
	29	60.08	1591	541	3	7.36	
	26	66.60	1591	600	3	6.64	
	23	75.45	1878	679	3	5.87	
	21	83.25	1878	750	3	5.31	
	19	94.12	1878	847	3	4.70	**B_483GH71C4**
	16	107.47	1878	968	3	4.11	
	14	122.19	1878	1100	3	3.62	
	13	130.78	1878	1177	3	3.38	
	12	150.76	1878	1357	3	2.94	
	10	169.53	1878	1526	3	2.61	
	8.76	199.80	1591	1799	4	2.21	
	7.74	226.05	1878	2035	4	1.96	
	6.81	256.95	1878	2313	4	1.72	
	5.97	292.95	1878	2638	4	1.51	
	5.35	326.95	1878	2944	4	1.35	
0.25	4.64	376.90	1878	3393	4	1.17	
	4.13	423.83	1878	3816	4	1.04	
	3.56	492.21	1878	3983	4	0.90	
	3.16	553.29	1878	3983	4	0.80	**B_484GH71C4**
	2.75	636.22	1878	3983	4	0.70	
	2.42	723.36	1878	3983	4	0.61	
	2.13	822.34	1878	3983	4	0.54	
	1.86	941.62	1878	3983	4	0.47	
	1.61	1085.62	1878	3983	4	0.41	
	1.43	1220.62	1878	3983	4	0.36	
	1.24	1406.59	1878	3983	4	0.31	
	1.11	1581.71	1878	3983	4	0.28	
	1.11	1578.69	1878	3983	5	0.28	
	0.97	1804.03	1878	3983	5	0.25	
	0.86	2045.40	1878	3983	5	0.22	
	0.74	2357.89	1878	3983	5	0.19	
	0.66	2651.45	1878	3983	5	0.17	
	0.58	3005.94	1878	3983	5	0.15	
	0.51	3417.65	1878	3983	5	0.13	**B_485GH71C4**
	0.45	3873.42	1878	3983	5	0.11	
	0.37	4741.75	1878	3983	5	0.09	
	0.34	5131.87	1878	3983	5	0.09	
	0.30	5915.82	1878	3983	5	0.07	
	0.26	6652.36	1878	3983	5	0.07	
	0.23	7479.66	1878	3983	5	0.06	
	239	7.31	2200	66	3	8.08	
	215	8.12	2200	73	3	8.08	
	187	9.34	2200	84	3	8.08	
	174	10.05	2200	90	3	8.08	
	150	11.7	2200	105	3	8.08	**B_583GH71C4**
	122	14.29	2200	129	3	8.08	
	107	16.43	2200	148	3	8.08	
	99	17.67	2200	159	3	8.08	
	85	20.59	2200	185	3	8.08	

(B) - See footnotes page on inside back cover

RHB integral gearmotors

1750 RPM – 60 Hz

Input power (Hp)	Speed (RPM)	Ratio	OHL (LBF) (B)	Output torque (in-lb)	Gear stage	Service factor (SF)	Catalog number
0.25 (cont.)	78	22.32	2200	201	3	8.08	B_583GH71C4
	72	24.29	2200	219	3	8.08	
	47	37.01	2200	333	3	8.08	
	41	42.57	2200	383	3	8.08	
	33	53.34	2200	480	3	8.08	
	30	57.83	2200	521	3	8.08	
	28	62.92	2200	567	3	8.08	
	25	68.74	2200	619	3	8.08	
	23	75.45	2200	679	3	7.96	
	21	83.28	2200	750	3	7.2	
	19	93.96	2200	846	3	6.36	
	17	103.33	2200	930	3	5.8	
	15	114.4	2200	1030	3	5.24	
	13	134.17	2200	1208	3	4.44	
	12	148.05	2200	1333	3	4.04	
	11	164.71	2200	1483	3	3.64	
	9	185.07	2200	1666	3	3.24	
	16	109.64	2503	987	3	7.29	B_683GH71C4
	14	126.09	2503	1135	3	6.39	
	13	136.60	2503	1230	3	5.90	
	12	150.98	2503	1359	3	5.34	
	10	176.14	2503	1586	3	4.58	
	9	196.07	2503	1765	3	4.11	
	8	215.68	2503	1942	3	3.74	
	7	243.72	2503	2194	3	3.31	
	7.03	248.88	2503	2241	4	3.24	B_684GH71C4
	6.25	280.06	2503	2522	4	2.88	
	5.55	315.23	2503	2838	4	2.56	
	4.82	362.91	2503	3267	4	2.22	
	4.19	417.36	2503	3758	4	1.93	
	3.72	470.81	2503	4239	4	1.71	
	3.21	545.93	2503	4915	4	1.48	
	2.86	611.69	2503	5507	4	1.32	
	2.53	692.22	2503	6232	4	1.17	
	2.17	806.72	2503	7262	4	1.00	
	1.93	907.85	2503	7262	4	0.89	
	1.68	1042.75	2503	7262	4	0.77	
	1.49	1176.42	2503	7262	4	0.69	
	1.33	1319.55	2503	7262	4	0.61	
	1.13	1552.90	2503	7262	4	0.52	
	1.00	1754.78	2503	7262	4	0.46	
	0.87	2012.29	2503	7262	4	0.40	
	0.89	1972.05	2503	7262	5	0.41	B_685GH71C4
	0.79	2226.81	2503	7262	5	0.36	
	0.68	2576.12	2503	7262	5	0.31	
	0.61	2890.30	2503	7262	5	0.28	
	0.52	3388.68	2503	7262	5	0.24	
	0.45	3850.81	2503	7262	5	0.21	
	0.40	4343.88	2503	7262	5	0.19	
	0.35	4947.77	2503	7262	5	0.16	
	0.31	5601.25	2503	7262	5	0.14	
	0.26	6661.24	2503	7262	5	0.12	
	0.25	6911.73	2503	7262	5	0.12	
	0.24	7341.75	2503	7262	5	0.11	
	10	176.50	4512	1589	3	6.81	B_883GH71C4
	9	193.24	4512	1740	3	6.31	
	8	215.25	4512	1938	3	5.76	
	7	246.13	4512	2216	3	5.13	
	6	272.95	4512	2458	3	4.68	
	6	302.68	4512	2725	3	4.27	
	5.36	326.53	4512	2940	4	4.97	B_884GH71C4
	4.84	361.83	4512	3258	4	4.49	
	4.04	432.86	4512	3897	4	3.75	
	3.63	481.85	4512	4338	4	3.37	
	3.25	538.13	4512	4845	4	3.02	
	2.84	615.33	4512	5540	4	2.64	
	2.47	709.19	4512	6385	4	2.29	

(B) - See footnotes page on inside back cover

RHB integral gearmotors

1750 RPM – 60 Hz

Input power (Hp)	Speed (RPM)	Ratio	OHL (LBF) (B)	Output torque (in-lb)	Gear stage	Service factor (SF)	Catalog number
0.25 (cont.)	2.22	789.97	4512	7113	4	2.05	B_884GH71C4
	1.94	903.46	4512	8134	4	1.80	
	1.67	1044.88	4512	9408	4	1.55	
	1.47	1187.85	4512	10695	4	1.37	
	1.30	1348.93	4512	12145	4	1.20	
	1.13	1549.80	4512	13954	4	1.05	
	0.99	1772.14	4512	14612	4	0.92	
	0.89	1965.24	4512	14612	4	0.83	
	0.77	2265.49	4512	14612	4	0.72	
	0.69	2546.62	4512	14612	4	0.64	
	0.69	2544.26	4512	14612	5	0.64	B_885GH71C4
	0.60	2909.26	4512	14612	5	0.56	
	0.52	3366.51	4512	14612	5	0.48	
	0.47	3730.28	4512	14612	5	0.44	
	0.40	4324.25	4512	14612	5	0.38	
	0.36	4833.99	4512	14612	5	0.34	
	0.30	5914.83	4512	14612	5	0.27	
	0.27	6577.89	4512	14612	5	0.25	
	0.25	6884.26	4512	14612	5	0.24	
	0.24	7327.11	4512	14612	5	0.22	
	5.64	310.55	5586	2796	4	9.50	B_1084GH71C4
	5.23	334.68	5586	3013	4	8.82	
	4.67	374.95	5586	3376	4	7.87	
	4.10	427.31	5586	3847	4	6.91	
	3.77	464.52	5586	4182	4	6.35	
	3.16	554.54	5586	4993	4	5.32	B_1084GH71C4
	2.75	636.88	5586	5734	4	4.63	
	2.44	718.24	5586	6467	4	4.11	
	2.11	830.63	5586	7479	4	3.55	
	1.84	951.46	5586	8567	4	3.10	
	1.61	1085.20	5586	9771	4	2.72	
	1.43	1228.03	5586	11057	4	2.40	
	1.24	1407.77	5586	12675	4	2.10	
	1.07	1643.07	5586	14793	4	1.80	
	0.95	1847.66	5586	16636	4	1.60	
	0.87	2021.57	5586	18201	4	1.46	
	0.80	2196.40	5586	19775	4	1.34	
	0.72	2434.70	5586	21921	4	1.21	
	0.64	2751.21	5586	24771	4	1.07	
	0.73	2393.68	5586	21552	5	1.23	B_1085GH71C4
	0.65	2699.62	5586	24306	5	1.09	
	0.56	3118.86	5586	26568	5	0.95	
	0.49	3574.14	5586	26568	5	0.83	
	0.44	4021.75	5586	26568	5	0.73	
	0.39	4533.46	5586	26568	5	0.65	
	0.34	5194.71	5586	26568	5	0.57	
	0.29	6059.68	5586	26568	5	0.49	
	0.26	6821.07	5586	26568	5	0.43	
	0.25	6997.33	5586	26568	5	0.42	
	0.23	7735.04	5586	26568	5	0.38	
	5.82	300.60	6907	2706	4	15.38	B_1284GH71C4
	5.04	346.89	6907	3123	4	13.33	
	4.64	377.09	6907	3395	4	12.26	
	4.04	433.18	6907	3900	4	10.67	
	3.43	510.41	6907	4595	4	9.06	
	3.06	572.81	6907	5157	4	8.07	
	2.68	653.45	6907	5883	4	7.07	
	2.36	740.12	6907	6664	4	6.25	
	2.04	857.75	6907	7723	4	5.39	
	1.84	952.42	6907	8575	4	4.85	
	1.58	1105.88	6907	9957	4	4.18	
	1.40	1247.30	6907	11230	4	3.71	
	1.22	1429.26	6907	12868	4	3.23	
	1.07	1641.10	6907	14776	4	2.82	
	0.94	1856.00	6907	16711	4	2.49	
	0.82	2136.15	6907	19233	4	2.16	
	0.72	2420.20	6907	21790	4	1.91	
	0.64	2734.83	6907	24623	4	1.69	B_1284GH71C4

(B) - See footnotes page on inside back cover

RHB integral gearmotors

1750 RPM – 60 Hz

Input power (Hp)	Speed (RPM)	Ratio	OHL (LBF) (B)	Output torque (in-lb)	Gear stage	Service factor (SF)	Catalog number
0.25 (cont.)	0.63	2775.11	6907	24986	5	1.67	B_1285GH71C4
	0.57	3085.29	6907	27779	5	1.50	
	0.49	3583.92	6907	32268	5	1.29	
	0.43	4055.71	6907	36516	5	1.14	
	0.38	4665.11	6907	41623	5	0.99	
	0.32	5416.90	6907	41623	5	0.85	
	0.29	6005.80	6907	41623	5	0.77	
	0.25	6977.16	6907	41623	5	0.66	
	5.53	316.44	13027	2849	4	24.87	B_1484GH71C4
	4.81	363.83	13027	3276	4	21.63	
	4.31	406.30	13027	3658	4	19.37	
	3.78	462.98	13027	4168	4	17.00	
	3.36	520.67	13027	4688	4	15.11	
	2.86	611.73	13027	5508	4	12.86	
	2.49	702.08	13027	6321	4	11.21	
	2.23	783.52	13027	7055	4	10.04	
	1.94	903.16	13027	8132	4	8.71	
	1.70	1029.62	13027	9270	4	7.64	
	1.50	1163.54	13027	10476	4	6.76	
	1.31	1334.52	13027	12015	4	5.90	
	1.13	1554.16	13027	13993	4	5.06	
	1.03	1702.48	13027	15328	4	4.62	
	0.91	1925.48	13027	17336	4	4.09	
	0.77	2284.97	13027	20573	4	3.44	B_1484GH71C4
	0.67	2593.20	13027	23348	4	3.03	
	0.61	2876.18	13027	25896	4	2.74	
	0.58	2999.41	13027	27005	5	2.62	B_1485GH71C4
	0.52	3361.65	13027	30267	5	2.34	
	0.46	3772.55	13027	33966	5	2.09	
	0.40	4406.83	13027	39677	5	1.79	
	0.35	5065.85	13027	45611	5	1.55	
	0.31	5702.89	13027	51346	5	1.38	
	0.28	6177.95	13027	55624	5	1.27	
	0.27	6493.15	13027	58462	5	1.21	
	0.25	7079.20	13027	63738	5	1.11	
	0.24	7280.36	13027	65549	5	1.08	
	5.44	321.92	18949	2898	4	41.25	B_1684GH71C4
	4.76	367.99	18949	3313	4	36.08	
	4.26	410.86	18949	3699	4	32.32	
	3.68	476.13	18949	4287	4	27.89	
	3.37	518.74	18949	4671	4	25.60	
	3.19	548.26	18949	4936	4	24.22	
	2.84	616.75	18949	5553	4	21.53	
	2.48	705.01	18949	6348	4	18.83	
	2.19	797.85	18949	7184	4	16.64	
	1.95	897.80	18949	8083	4	14.79	
	1.70	1031.24	18949	9285	4	12.88	
	1.48	1181.28	18949	10636	4	11.24	
	1.31	1338.81	18949	12054	4	9.92	
	1.13	1542.38	18949	13887	4	8.61	
	0.99	1759.94	18949	15846	4	7.54	
	0.91	1930.90	18949	17385	4	6.88	
	0.77	2279.59	18949	20524	4	5.83	
	0.66	2645.29	18949	23817	4	5.02	
	0.58	3023.12	18949	27219	4	4.39	
	0.67	2615.32	18949	23547	5	5.08	B_1685GH71C4
	0.58	3003.10	18949	27039	5	4.42	
	0.52	3333.45	18949	30013	5	3.98	
	0.45	3894.01	18949	35060	5	3.41	
	0.39	4496.84	18949	40488	5	2.95	
	0.35	5019.65	18949	45195	5	2.65	
	0.30	5804.70	18949	52263	5	2.29	
	0.27	6527.90	18949	58774	5	2.03	
	0.25	6920.19	18949	62306	5	1.92	
	0.23	7463.09	18949	67194	5	1.78	

(B) - See footnotes page on inside back cover

RHB integral gearmotors

1750 RPM – 60 Hz

Input power (Hp)	Speed (RPM)	Ratio	OHL (LBF) (B)	Output torque (in-lb)	Gear stage	Service factor (SF)	Catalog number
0.33	310	5.65	589	67	3	6.13	B_383GH71D4
	281	6.22	589	74	3	6.11	
	242	7.22	620	86	3	6.11	
	224	7.82	620	93	3	6.11	
	198	8.85	620	105	3	6.12	
	180	9.72	620	116	3	6.09	
	163	10.72	620	127	3	6.14	
	152	11.50	617	137	3	6.10	
	138	12.65	617	150	3	6.13	
	119	14.69	617	175	3	6.10	
	110	15.91	617	189	3	6.12	
	97	17.99	726	214	3	6.11	
	88	19.78	726	235	3	6.12	
	80	21.81	726	259	3	6.12	
	72	24.16	726	287	3	5.74	
	65	26.90	726	320	3	5.32	
	61	28.72	926	341	3	6.12	
	55	31.59	926	375	3	5.90	
	48	36.69	926	436	3	5.08	
	44	39.73	926	472	3	4.69	
	39	44.94	1150	534	3	4.14	
	35	49.38	1150	587	3	3.77	
	32	54.47	1150	647	3	3.42	
	29	60.33	1150	717	3	3.09	
	26	67.18	1150	798	3	2.77	
	23	77.09	1141	916	3	2.42	B_383GH71D4
	21	85.33	1141	1014	3	2.18	
	18	97.05	1141	1153	3	1.92	
	16	110.75	1141	1316	3	1.68	
	14	124.78	1141	1483	3	1.49	
	13	139.43	1141	1657	3	1.34	
	11	159.04	1141	1890	3	1.17	
	10	179.13	1141	2129	3	1.04	
	188	9.32	1032	111	3	6.10	B_483GH71D4
	172	10.15	1032	121	3	6.10	
	113	15.42	1110	183	3	6.13	
	104	16.79	1110	200	3	6.10	
	93	18.78	1149	223	3	6.12	
	85	20.54	1149	244	3	6.12	
	78	22.54	1149	268	3	6.11	
	70	24.85	1149	295	3	6.01	
	64	27.55	1149	327	3	5.57	
	61	28.90	1266	343	3	6.13	
	52	33.60	1266	399	3	6.12	
	47	37.28	1266	443	3	6.12	
	43	40.60	1266	483	3	6.11	
	39	45.41	1591	540	3	6.11	
	35	49.65	1591	590	3	6.12	
	32	54.49	1591	648	3	6.11	
	29	60.08	1591	714	3	5.58	
	26	66.60	1591	792	3	5.03	
	23	75.45	1878	897	3	4.44	
	21	83.25	1878	989	3	4.03	
	19	94.12	1878	1119	3	3.56	
	16	107.47	1878	1277	3	3.12	
	14	122.19	1878	1452	3	2.74	
	13	130.78	1878	1554	3	2.56	
	12	150.76	1878	1792	3	2.22	
	10	169.53	1878	2015	3	1.98	
	8.76	199.80	1591	2375	4	1.68	B_484GH71D4
	7.74	226.05	1878	2687	4	1.48	
	6.81	256.95	1878	3054	4	1.30	
	5.97	292.95	1878	3482	4	1.14	
	5.35	326.95	1878	3886	4	1.03	
	4.64	376.90	1878	3393	4	0.89	
	4.13	423.83	1878	3816	4	0.79	

(B) - See footnotes page on inside back cover

RHB integral gearmotors

1750 RPM – 60 Hz

Input power (Hp)	Speed (RPM)	Ratio	OHL (LBF) (B)	Output torque (in-lb)	Gear stage	Service factor (SF)	Catalog number
0.33 (cont.)	239	7.31	2200	87	3	6.12	B_583GH71D4
	215	8.12	2200	97	3	6.12	
	187	9.34	2200	111	3	6.12	
	174	10.05	2200	119	3	6.12	
	150	11.7	2200	139	3	6.12	
	122	14.29	2200	170	3	6.12	
	107	16.43	2200	195	3	6.12	
	99	17.67	2200	210	3	6.12	
	85	20.59	2200	245	3	6.12	
	78	22.32	2200	265	3	6.12	
	72	24.29	2200	289	3	6.12	
	47	37.01	2200	440	3	6.12	
	41	42.57	2200	506	3	6.12	
	33	53.34	2200	634	3	6.12	
	30	57.83	2200	687	3	6.12	
	28	62.92	2200	748	3	6.12	
	25	68.74	2200	817	3	6.12	
	23	75.45	2200	897	3	5.98	
	21	83.28	2200	990	3	5.45	
	19	93.96	2200	1117	3	4.81	
	17	103.33	2200	1228	3	4.39	
	15	114.4	2200	1360	3	3.97	
	13	134.17	2200	1595	3	3.36	
	12	148.05	2200	1760	3	3.06	
	11	164.71	2200	1958	3	2.76	
	9	185.07	2200	2200	3	2.45	
	206	8.50	2503	101	3	6.12	B_683GH71D4
	184	9.52	2503	113	3	6.13	
	168	10.40	2503	124	3	6.10	
	92	18.93	2503	225	3	6.12	
	82	21.22	2503	252	3	6.12	
	76	23.16	2503	275	3	6.12	
	69	25.42	2503	302	3	6.12	
	63	27.99	2503	333	3	6.11	
	58	30.38	2503	361	3	6.12	
	34	51.96	2503	618	3	6.11	
	30	58.23	2503	692	3	6.12	
	28	63.57	2503	756	3	6.11	
	25	69.78	2503	829	3	6.12	
	23	76.84	2503	913	3	6.12	
	21	83.40	2503	991	3	6.12	
	19	90.89	2503	1080	3	6.12	
	18	99.55	2503	1183	3	5.95	
	16	109.64	2503	1303	3	5.52	
	14	126.09	2503	1499	3	4.84	
	13	136.60	2503	1623	3	4.47	
	12	150.98	2503	1794	3	4.05	
	10	176.14	2503	2093	3	3.47	
	9	196.07	2503	2330	3	3.11	
	8	215.68	2503	2563	3	2.83	
	7	243.72	2503	2897	3	2.51	
	7.03	248.88	2503	2958	4	2.46	B_684GH71D4
	6.25	280.06	2503	3328	4	2.18	
	5.55	315.23	2503	3746	4	1.94	
	4.82	362.91	2503	4313	4	1.68	
	4.19	417.36	2503	4960	4	1.46	
	3.72	470.81	2503	5595	4	1.30	
	3.21	545.93	2503	6488	4	1.12	
	2.86	611.69	2503	5507	4	1.00	
	2.53	692.22	2503	6232	4	0.88	
	2.17	806.72	2503	7262	4	0.76	
	69	25.53	4512	303	3	6.13	B_883GH71D4
	61	28.50	4512	339	3	6.11	
	57	30.87	4512	367	3	6.12	
	23	75.45	4512	897	3	6.12	
	21	84.21	4512	1001	3	6.12	
	19	91.22	4512	1084	3	6.12	

(B) - See footnotes page on inside back cover

RHB integral gearmotors

1750 RPM – 60 Hz

Input power (Hp)	Speed (RPM)	Ratio	OHL (LBF) (B)	Output torque (in-lb)	Gear stage	Service factor (SF)	Catalog number
0.33 (cont.)	17	103.38	4512	1229	3	6.12	B_883GH71D4
	16	111.37	4512	1324	3	6.12	
	15	120.42	4512	1431	3	6.12	
	13	130.77	4512	1554	3	6.12	
	12	144.58	4512	1718	3	6.08	
	11	156.63	4512	1862	3	5.69	
	10	176.50	4512	2098	3	5.16	
	9	193.24	4512	2297	3	4.78	
	8	215.25	4512	2558	3	4.36	
	7	246.13	4512	2925	3	3.88	
	6	272.95	4512	3244	3	3.55	
	6	302.68	4512	3597	3	3.23	
	5.36	326.53	4512	3881	4	3.77	B_884GH71D4
	4.84	361.83	4512	4300	4	3.40	
	4.04	432.86	4512	5144	4	2.84	
	3.63	481.85	4512	5727	4	2.55	
	3.25	538.13	4512	6395	4	2.28	
	2.84	615.33	4512	7313	4	2.00	
	2.47	709.19	4512	8429	4	1.73	
	2.22	789.97	4512	9389	4	1.56	
	1.94	903.46	4512	10737	4	1.36	
	1.67	1044.88	4512	12418	4	1.18	
	1.47	1187.85	4512	14117	4	1.04	
	1.30	1348.93	4512	12145	4	0.91	
	1.13	1549.80	4512	13954	4	0.79	
	5.64	310.55	5586	3691	4	7.20	B_1084GH71D4
	5.23	334.68	5586	3978	4	6.68	
	4.67	374.95	5586	4456	4	5.96	
	4.10	427.31	5586	5078	4	5.23	
	3.77	464.52	5586	5521	4	4.81	
	3.16	554.54	5586	6591	4	4.03	
	2.75	636.88	5586	7569	4	3.51	
	2.44	718.24	5586	8536	4	3.11	
	2.11	830.63	5586	9872	4	2.69	
	1.84	951.46	5586	11308	4	2.35	
	1.61	1085.20	5586	12897	4	2.06	
	1.43	1228.03	5586	14595	4	1.82	
	1.24	1407.77	5586	16731	4	1.59	
	1.07	1643.07	5586	19527	4	1.36	
	0.95	1847.66	5586	21959	4	1.21	
	0.87	2021.57	5586	24026	4	1.11	
	0.80	2196.40	5586	26104	4	1.02	
	0.72	2434.70	5586	21921	4	0.92	
	0.64	2751.21	5586	24771	4	0.81	
	0.73	2393.68	5586	21552	5	0.93	B_1085GH71D4
	0.65	2699.62	5586	24306	5	0.83	
	5.82	300.60	6907	3573	4	11.65	B_1284GH71D4
	5.04	346.89	6907	4123	4	10.10	
	4.64	377.09	6907	4482	4	9.29	
	4.04	433.18	6907	5148	4	8.08	
	3.43	510.41	6907	6066	4	6.86	
	3.06	572.81	6907	6808	4	6.11	B_1284GH71D4
	2.68	653.45	6907	7766	4	5.36	
	2.36	740.12	6907	8796	4	4.73	
	2.04	857.75	6907	10194	4	4.08	
	1.84	952.42	6907	11319	4	3.68	
	1.58	1105.88	6907	13143	4	3.17	
	1.40	1247.30	6907	14824	4	2.81	
	1.22	1429.26	6907	16986	4	2.45	
	1.07	1641.10	6907	19504	4	2.13	
	0.94	1856.00	6907	22058	4	1.89	
	0.82	2136.15	6907	25388	4	1.64	
	0.72	2420.20	6907	28763	4	1.45	
	0.64	2734.83	6907	32503	4	1.28	

(B) - See footnotes page on inside back cover

RHB integral gearmotors

1750 RPM – 60 Hz

Input power (Hp)	Speed (RPM)	Ratio	OHL (LBF) (B)	Output torque (in-lb)	Gear stage	Service factor (SF)	Catalog number
0.33 (cont.)	0.63	2775.11	6907	32981	5	1.26	B_1285GH71D4
	0.57	3085.29	6907	36668	5	1.14	
	0.49	3583.92	6907	32268	5	0.98	
	0.43	4055.71	6907	36516	5	0.86	
	0.38	4665.11	6907	41623	5	0.75	
	0.32	5416.90	6907	41623	5	0.65	
	0.29	6005.80	6907	41623	5	0.58	
	0.25	6977.16	6907	41623	5	0.50	
	5.53	316.44	13027	3761	4	18.84	B_1484GH71D4
	4.81	363.83	13027	4324	4	16.38	
	4.31	406.30	13027	4829	4	14.67	
	3.78	462.98	13027	5502	4	12.88	
	3.36	520.67	13027	6188	4	11.45	
	2.86	611.73	13027	7270	4	9.74	
	2.49	702.08	13027	8344	4	8.49	
	2.23	783.52	13027	9312	4	7.61	
	1.94	903.16	13027	10734	4	6.60	
	1.70	1029.62	13027	12237	4	5.79	
	1.50	1163.54	13027	13828	4	5.12	
	1.31	1334.52	13027	15860	4	4.47	
	1.13	1554.16	13027	18471	4	3.84	
	1.03	1702.48	13027	20234	4	3.50	
	0.91	1925.48	13027	22884	4	3.10	
	0.77	2284.97	13027	27156	4	2.61	
	0.67	2593.20	13027	30819	4	2.30	
	0.61	2876.18	13027	34183	4	2.07	
	0.58	2999.41	13027	35647	5	1.99	B_1485GH71D4
	0.52	3361.65	13027	39952	5	1.77	
	0.46	3772.55	13027	44836	5	1.58	
	0.40	4406.83	13027	52374	5	1.35	
	0.35	5065.85	13027	60206	5	1.18	
	0.31	5702.89	13027	67777	5	1.05	
	0.28	6177.95	13027	55624	5	0.96	
	0.27	6493.15	13027	58462	5	0.92	
	0.25	7079.20	13027	63738	5	0.84	
	0.24	7280.36	13027	65549	5	0.82	
	5.44	321.92	18949	3826	4	31.25	B_1684GH71D4
	4.76	367.99	18949	4373	4	27.34	
	4.26	410.86	18949	4883	4	24.48	
	3.68	476.13	18949	5659	4	21.13	
	3.37	518.74	18949	6165	4	19.39	
	3.19	548.26	18949	6516	4	18.35	
	2.84	616.75	18949	7330	4	16.31	
	2.48	705.01	18949	8379	4	14.27	
	2.19	797.85	18949	9482	4	12.61	
	1.95	897.80	18949	10670	4	11.20	
	1.70	1031.24	18949	12256	4	9.75	
	1.48	1181.28	18949	14039	4	8.52	
	1.31	1338.81	18949	15911	4	7.51	
	1.13	1542.38	18949	18331	4	6.52	
	0.99	1759.94	18949	20916	4	5.72	
	0.91	1930.90	18949	22948	4	5.21	
	0.77	2279.59	18949	27092	4	4.41	
	0.66	2645.29	18949	31439	4	3.80	B_1684GH71D4
	0.58	3023.12	18949	35929	4	3.33	
	0.67	2615.32	18949	31082	5	3.85	B_1685GH71D4
	0.58	3003.10	18949	35691	5	3.35	
	0.52	3333.45	18949	39617	5	3.02	
	0.45	3894.01	18949	46279	5	2.58	
	0.39	4496.84	18949	53444	5	2.24	
	0.35	5019.65	18949	59657	5	2.00	
	0.30	5804.70	18949	68987	5	1.73	
	0.27	6527.90	18949	77582	5	1.54	
	0.25	6920.19	18949	82244	5	1.45	
	0.23	7463.09	18949	88697	5	1.35	

(B) - See footnotes page on inside back cover

RHB integral gearmotors

1750 RPM – 60 Hz

Input power (Hp)	Speed (RPM)	Ratio	OHL (LBF) (B)	Output torque (in-lb)	Gear stage	Service factor (SF)	Catalog number
	310	5.65	589	102	3	4.03	
	281	6.22	589	112	3	4.04	
	242	7.22	620	130	3	4.04	
	224	7.82	620	141	3	4.03	
	198	8.85	620	159	3	4.04	
	180	9.72	620	175	3	4.04	
	163	10.72	620	193	3	4.04	
	152	11.50	617	207	3	4.04	
	138	12.65	617	228	3	4.03	
	119	14.69	617	265	3	4.03	
	110	15.91	617	286	3	4.04	
	97	17.99	726	324	3	4.04	
	88	19.78	726	356	3	4.04	
	80	21.81	726	393	3	4.04	
	72	24.16	726	435	3	3.79	**B_383GH71E4**
	65	26.90	726	484	3	3.52	
	61	28.72	926	517	3	4.04	
	55	31.59	926	569	3	3.89	
	48	36.69	926	661	3	3.35	
	44	39.73	926	715	3	3.09	
	39	44.94	1150	809	3	2.74	
	35	49.38	1150	889	3	2.49	
	32	54.47	1150	981	3	2.26	
	29	60.33	1150	1086	3	2.04	
	26	67.18	1150	1210	3	1.83	
	23	77.09	1411	1388	3	1.59	
	21	85.33	1411	1537	3	1.44	
	18	97.05	1411	1748	3	1.27	
	16	110.75	1411	1994	3	1.11	
	242	7.22	1032	130	3	4.04	
	208	8.40	1032	151	3	4.04	
	188	9.32	1032	168	3	4.03	
	172	10.15	1032	183	3	4.03	
0.5	146	11.95	1110	215	3	4.04	
	126	13.90	1110	250	3	4.04	
	113	15.42	1110	278	3	4.03	
	104	16.79	1110	302	3	4.04	
	93	18.78	1149	338	3	4.04	
	85	20.54	1149	370	3	4.04	
	78	22.54	1149	406	3	4.04	
	70	24.85	1149	447	3	3.97	
	64	27.55	1149	496	3	3.68	**B_483GH71E4**
	61	28.90	1266	520	3	4.04	
	52	33.60	1266	605	3	4.04	
	47	37.28	1266	671	3	4.04	
	43	40.60	1266	731	3	4.04	
	39	45.41	1591	818	3	4.04	
	35	49.65	1591	894	3	4.04	
	32	54.49	1591	981	3	4.04	
	29	60.08	1591	1082	3	3.68	
	26	66.60	1591	1199	3	3.32	
	23	75.45	1878	1359	3	2.93	
	21	83.25	1878	1499	3	2.66	
	19	94.12	1878	1695	3	2.35	
	16	107.47	1878	1935	3	2.06	
	14	122.19	1878	2200	3	1.81	
	13	130.78	1878	2355	3	1.69	**B_483GH71E4**
	12	150.76	1878	2715	3	1.47	
	10	169.53	1878	3053	3	1.30	
	8.76	199.80	1591	3598	4	1.11	
	7.74	226.05	1878	3983	4	0.98	
	6.81	256.95	1878	3983	4	0.86	**B_484GH71E4**
	5.97	292.95	1878	3983	4	0.76	
	5.35	326.95	1878	3983	4	0.68	
	239	7.31	2200	132	3	4.04	
	215	8.12	2200	146	3	4.04	**B_583GH71E4**
	187	9.34	2200	168	3	4.04	

(B) - See footnotes page on inside back cover

RHB integral gearmotors

1750 RPM – 60 Hz

Input power (Hp)	Speed (RPM)	Ratio	OHL (LBF) (B)	Output torque (in-lb)	Gear stage	Service factor (SF)	Catalog number
0.5 (cont.)	174	10.05	2200	181	3	4.04	B_583GH71E4
	150	11.7	2200	211	3	4.04	
	122	14.29	2200	257	3	4.04	
	107	16.43	2200	296	3	4.04	
	99	17.67	2200	318	3	4.04	
	85	20.59	2200	371	3	4.04	
	78	22.32	2200	402	3	4.04	
	72	24.29	2200	437	3	4.04	
	47	37.01	2200	666	3	4.04	
	41	42.57	2200	767	3	4.04	
	33	53.34	2200	961	3	4.04	
	30	57.83	2200	1041	3	4.04	
	28	62.92	2200	1133	3	4.04	
	25	68.74	2200	1238	3	4.04	
	23	75.45	2200	1359	3	3.98	
	21	83.28	2200	1500	3	3.6	
	19	93.96	2200	1692	3	3.18	
	17	103.33	2200	1861	3	2.9	
	15	114.4	2200	2060	3	2.62	
	13	134.17	2200	2416	3	2.22	
	12	148.05	2200	2666	3	2.02	
	11	164.71	2200	2966	3	1.82	
	9	185.07	2200	3333	3	1.62	
	206	8.50	2503	153	3	4.04	B_683GH71E4
	184	9.52	2503	171	3	4.05	
	168	10.40	2503	187	3	4.04	
	92	18.93	2503	341	3	4.04	
	82	21.22	2503	382	3	4.04	
	76	23.16	2503	417	3	4.04	
	69	25.42	2503	458	3	4.04	
	63	27.99	2503	504	3	4.04	
	58	30.38	2503	547	3	4.04	
	34	51.96	2503	936	3	4.04	
	30	58.23	2503	1049	3	4.04	
	28	63.57	2503	1145	3	4.04	
	25	69.78	2503	1257	3	4.04	
	23	76.84	2503	1384	3	4.04	
	21	83.40	2503	1502	3	4.04	
	19	90.89	2503	1637	3	4.04	
	18	99.55	2503	1793	3	3.93	
	16	109.64	2503	1974	3	3.64	
	14	126.09	2503	2271	3	3.20	
	13	136.60	2503	2460	3	2.95	
	12	150.98	2503	2719	3	2.67	
	10	176.14	2503	3172	3	2.29	
	9	196.07	2503	3531	3	2.06	
	8	215.68	2503	3884	3	1.87	
	7	243.72	2503	4389	3	1.65	
	7.03	248.88	2503	4482	4	1.62	B_684GH71E4
	6.25	280.06	2503	5043	4	1.44	
	5.55	315.23	2503	5676	4	1.28	
	4.82	362.91	2503	6535	4	1.11	
	4.19	417.36	2503	7262	4	0.97	
	3.72	470.81	2503	7262	4	0.86	
	3.21	545.93	2503	7262	4	0.74	
	2.86	611.69	2503	7262	4	0.66	
	69	25.53	4512	460	3	4.04	B_883GH71E4
	61	28.50	4512	513	3	4.04	
	57	30.87	4512	556	3	4.04	
	23	75.45	4512	1359	3	4.04	
	21	84.21	4512	1516	3	4.04	
	19	91.22	4512	1643	3	4.04	
	17	103.38	4512	1862	3	4.04	
	16	111.37	4512	2005	3	4.04	
	15	120.42	4512	2168	3	4.04	
	13	130.77	4512	2355	3	4.04	
	12	144.58	4512	2603	3	4.01	

(B) - See footnotes page on inside back cover

RHB integral gearmotors

1750 RPM – 60 Hz

Input power (Hp)	Speed (RPM)	Ratio	OHL (LBF) (B)	Output torque (in-lb)	Gear stage	Service factor (SF)	Catalog number
0.5 (cont.)	11	156.63	4512	2820	3	3.76	B_883GH71E4
	10	176.50	4512	3178	3	3.41	
	9	193.24	4512	3480	3	3.16	
	8	215.25	4512	3876	3	2.88	
	7	246.13	4512	4432	3	2.56	
	6	272.95	4512	4915	3	2.34	
	6	302.68	4512	5450	3	2.13	
	5.36	326.53	4512	5880	4	2.49	B_884GH71E4
	4.84	361.83	4512	6515	4	2.24	
	4.04	432.86	4512	7795	4	1.87	
	3.63	481.85	4512	8677	4	1.68	
	3.25	538.13	4512	9690	4	1.51	
	2.84	615.33	4512	11080	4	1.32	
	2.47	709.19	4512	12771	4	1.14	B_884GH71E4
	2.22	789.97	4512	14225	4	1.03	
	1.94	903.46	4512	14612	4	0.90	
	1.67	1044.88	4512	14612	4	0.78	
	1.47	1187.85	4512	14612	4	0.68	
	5.64	310.55	5586	5592	4	4.75	B_1084GH71E4
	5.23	334.68	5586	6027	4	4.41	
	4.67	374.95	5586	6752	4	3.93	
	4.10	427.31	5586	7695	4	3.45	
	3.77	464.52	5586	8365	4	3.18	
	3.16	554.54	5586	9986	4	2.66	
	2.75	636.88	5586	11468	4	2.32	
	2.44	718.24	5586	12933	4	2.05	
	2.11	830.63	5586	14957	4	1.78	
	1.84	951.46	5586	17133	4	1.55	
	1.61	1085.20	5586	19541	4	1.36	
	1.43	1228.03	5586	22113	4	1.20	
	1.24	1407.77	5586	25350	4	1.05	
	1.07	1643.07	5586	26568	4	0.90	
	0.95	1847.66	5586	26568	4	0.80	
	0.87	2021.57	5586	26568	4	0.73	
	0.80	2196.40	5586	26568	4	0.67	
	5.82	300.60	6907	5413	4	7.69	B_1284GH71E4
	5.04	346.89	6907	6246	4	6.66	
	4.64	377.09	6907	6790	4	6.13	
	4.04	433.18	6907	7800	4	5.34	
	3.43	510.41	6907	9191	4	4.53	
	3.06	572.81	6907	10315	4	4.04	
	2.68	653.45	6907	11767	4	3.54	
	2.36	740.12	6907	13327	4	3.12	
	2.04	857.75	6907	15446	4	2.69	
	1.84	952.42	6907	17150	4	2.43	
	1.58	1105.88	6907	19914	4	2.09	
	1.40	1247.30	6907	22460	4	1.85	
	1.22	1429.26	6907	25737	4	1.62	
	1.07	1641.10	6907	29552	4	1.41	
	0.94	1856.00	6907	33421	4	1.25	
	0.82	2136.15	6907	38466	4	1.08	
	0.72	2420.20	6907	41623	4	0.96	
	0.64	2734.83	6907	41623	4	0.85	
	0.63	2775.11	6907	41623	5	0.83	B_1285GH71E4
	0.57	3085.29	6907	41623	5	0.75	
	0.49	3583.92	6907	41623	5	0.64	
	0.43	4055.71	6907	41623	5	0.57	
	2.49	702.08	13027	12642	4	5.60	B_1484GH71E4
	2.23	783.52	13027	14109	4	5.02	
	1.94	903.16	13027	16263	4	4.36	
	1.70	1029.62	13027	18541	4	3.82	
	1.50	1163.54	13027	20952	4	3.38	
	1.31	1334.52	13027	24031	4	2.95	
	1.13	1554.16	13027	27986	4	2.53	
	1.03	1702.48	13027	30657	4	2.31	
	0.91	1925.48	13027	34672	4	2.04	

(B) - See footnotes page on inside back cover

RHB integral gearmotors

1750 RPM – 60 Hz

Input power (Hp)	Speed (RPM)	Ratio	OHL (LBF) (B)	Output torque (in-lb)	Gear stage	Service factor (SF)	Catalog number
0.5 (cont.)	0.77	2284.97	13027	41146	4	1.72	B_1484GH71E4
	0.67	2593.20	13027	46696	4	1.52	
	0.61	2876.18	13027	51792	4	1.37	
	0.58	2999.41	13027	54011	5	1.31	B_1485GH71E4
	0.52	3361.65	13027	60534	5	1.17	
	0.46	3772.55	13027	67933	5	1.04	
	0.40	4406.83	13027	70848	5	0.89	
	0.35	5065.85	13027	70848	5	0.78	
	0.31	5702.89	13027	70848	5	0.69	
	5.44	321.92	18949	5797	4	20.62	B_1684GH71E4
	4.76	367.99	18949	6626	4	18.04	
	4.26	410.86	18949	7398	4	16.16	
	3.68	476.13	18949	8574	4	13.94	
	3.37	518.74	18949	9341	4	12.80	
	3.19	548.26	18949	9873	4	12.11	B_1684GH71E4
	2.84	616.75	18949	11106	4	10.77	
	2.48	705.01	18949	12695	4	9.42	
	2.19	797.85	18949	14367	4	8.32	
	1.95	897.80	18949	16167	4	7.40	
	1.70	1031.24	18949	18570	4	6.44	
	1.48	1181.28	18949	21271	4	5.62	
	1.31	1338.81	18949	24108	4	4.96	
	1.13	1542.38	18949	27774	4	4.30	
	0.99	1759.94	18949	31692	4	3.77	
	0.91	1930.90	18949	34770	4	3.44	
	0.77	2279.59	18949	41049	4	2.91	
	0.66	2645.29	18949	47634	4	2.51	
	0.58	3023.12	18949	54438	4	2.20	
	0.67	2615.32	18949	47094	5	2.54	B_1685GH71E4
	0.58	3003.10	18949	54077	5	2.21	
	0.52	3333.45	18949	60026	5	1.99	
	0.45	3894.01	18949	70120	5	1.71	
	0.39	4496.84	18949	80975	5	1.48	
	0.35	5019.65	18949	90390	5	1.32	
	0.30	5804.70	18949	104526	5	1.14	
	0.27	6527.90	18949	117549	5	1.02	
	0.25	6920.19	18949	119556	5	0.96	
	0.23	7463.09	18949	119556	5	0.89	
0.75	310	5.65	589	153	3	2.69	B_383GH80F4
	281	6.22	589	168	3	2.69	
	242	7.22	620	195	3	2.69	
	224	7.82	620	211	3	2.69	
	198	8.85	620	239	3	2.69	
	180	9.72	620	263	3	2.69	
	163	10.72	620	290	3	2.69	
	152	11.50	617	311	3	2.69	
	138	12.65	617	342	3	2.69	
	119	14.69	617	397	3	2.69	
	110	15.91	617	430	3	2.69	
	97	17.99	726	486	3	2.69	
	88	19.78	726	534	3	2.69	
	80	21.81	726	589	3	2.69	
	72	24.16	726	653	3	2.52	
	65	26.90	726	727	3	2.34	
	61	28.72	926	776	3	2.69	
	55	31.59	926	853	3	2.59	
	48	36.69	926	991	3	2.23	
	44	39.73	926	1073	3	2.06	
	39	44.94	1150	1214	3	1.82	
	35	49.38	1150	1334	3	1.66	
	32	54.47	1150	1471	3	1.50	
	29	60.33	1150	1630	3	1.36	
	26	67.18	1150	1815	3	1.22	
	23	77.09	1411	2082	3	1.06	
	242	7.22	1032	195	3	2.69	B_483GH80F4
	208	8.40	1032	227	3	2.69	

(B) - See footnotes page on inside back cover

RHB integral gearmotors

1750 RPM – 60 Hz

Input power (Hp)	Speed (RPM)	Ratio	OHL (LBF) (B)	Output torque (in-lb)	Gear stage	Service factor (SF)	Catalog number
0.75 (cont.)	188	9.32	1032	252	3	2.69	B_483GH80F4
	172	10.15	1032	274	3	2.69	
	146	11.95	1110	323	3	2.69	
	126	13.90	1110	375	3	2.69	
	113	15.42	1110	417	3	2.69	
	104	16.79	1110	454	3	2.69	
	93	18.78	1149	507	3	2.69	
	85	20.54	1149	555	3	2.69	
	78	22.54	1149	609	3	2.69	
	70	24.85	1149	671	3	2.64	
	64	27.55	1149	744	3	2.45	
	61	28.90	1266	781	3	2.69	
	52	33.60	1266	908	3	2.69	
	47	37.28	1266	1007	3	2.69	
	43	40.60	1266	1097	3	2.69	B_483GH80F4
	39	45.41	1591	1227	3	2.69	
	35	49.65	1591	1341	3	2.69	
	32	54.49	1591	1472	3	2.69	
	29	60.08	1591	1623	3	2.45	
	26	66.60	1591	1799	3	2.21	
	23	75.45	1878	2038	3	1.95	
	21	83.25	1878	2249	3	1.77	
	19	94.12	1878	2542	3	1.57	
	16	107.47	1878	2903	3	1.37	
	14	122.19	1878	3300	3	1.21	
	13	130.78	1878	3532	3	1.13	
	8.76	199.80	1591	3983	4	0.74	B_484GH80F4
	300	5.83	2200	157	3	3.28	B_583GH80F4
	239	7.31	2200	197	3	3.28	
	215	8.12	2200	219	3	3.28	
	187	9.34	2200	252	3	3.28	
	174	10.05	2200	271	3	3.28	
	150	11.7	2200	316	3	3.28	
	136	12.86	2200	347	3	3.28	
	122	14.29	2200	386	3	3.28	
	107	16.43	2200	444	3	3.28	
	99	17.67	2200	477	3	3.28	
	85	20.59	2200	556	3	3.28	
	78	22.32	2200	603	3	3.28	
	72	24.29	2200	656	3	3.28	
	66	26.55	2200	717	3	3.28	
	53	33.31	2200	900	3	3.28	
	47	37.01	2200	1000	3	3.28	
	41	42.57	2200	1150	3	3.28	
	33	53.34	2200	1441	3	3.28	
	30	57.83	2200	1562	3	3.28	
	28	62.92	2200	1700	3	3.17	
	25	68.74	2200	1857	3	2.91	
	23	75.45	2200	2038	3	2.65	
	21	83.28	2200	2249	3	2.4	
	19	93.96	2200	2538	3	2.12	
	17	103.33	2200	2791	3	1.93	
	15	114.4	2200	3090	3	1.75	
	13	134.17	2200	3624	3	1.48	
	12	148.05	2200	3999	3	1.35	
	11	164.71	2200	4449	3	1.21	
	9	185.07	2200	4999	3	1.08	
	206	8.50	2503	230	3	2.69	B_683GH80F4
	184	9.52	2503	257	3	2.69	
	168	10.40	2503	281	3	2.69	
	92	18.93	2503	511	3	2.69	
	82	21.22	2503	573	3	2.69	
	76	23.16	2503	626	3	2.69	
	69	25.42	2503	687	3	2.69	
	63	27.99	2503	756	3	2.69	
	58	30.38	2503	821	3	2.69	

(B) - See footnotes page on inside back cover

RHB integral gearmotors

1750 RPM – 60 Hz

Input power (Hp)	Speed (RPM)	Ratio	OHL (LBF) (B)	Output torque (in-lb)	Gear stage	Service factor (SF)	Catalog number
0.75 (cont.)	34	51.96	2503	1403	3	2.69	B_683GH80F4
	30	58.23	2503	1573	3	2.69	
	28	63.57	2503	1717	3	2.69	
	25	69.78	2503	1885	3	2.69	
	23	76.84	2503	2076	3	2.69	
	21	83.40	2503	2253	3	2.69	
	19	90.89	2503	2455	3	2.69	
	18	99.55	2503	2689	3	2.62	
	16	109.64	2503	2961	3	2.43	
	14	126.09	2503	3406	3	2.13	
	13	136.60	2503	3690	3	1.97	
	12	150.98	2503	4078	3	1.78	
	10	176.14	2503	4758	3	1.53	
	9	196.07	2503	5296	3	1.37	
	8	215.68	2503	5826	3	1.25	
	7	243.72	2503	6583	3	1.10	
	7.03	248.88	2503	6722	4	1.08	B_684GH80F4
	6.25	280.06	2503	7262	4	0.96	
	5.55	315.23	2503	7262	4	0.85	
	4.82	362.91	2503	7262	4	0.74	
	69	25.53	4512	690	3	2.69	B_883GH80F4
	61	28.50	4512	770	3	2.69	
	57	30.87	4512	834	3	2.69	
	23	75.45	4512	2038	3	2.69	
	21	84.21	4512	2275	3	2.69	
	19	91.22	4512	2464	3	2.69	
	17	103.38	4512	2792	3	2.69	
	16	111.37	4512	3008	3	2.69	
	15	120.42	4512	3253	3	2.69	
	13	130.77	4512	3532	3	2.69	
	12	144.58	4512	3905	3	2.67	
	11	156.63	4512	4231	3	2.51	
	10	176.50	4512	4767	3	2.27	
	9	193.24	4512	5220	3	2.10	
	8	215.25	4512	5814	3	1.92	
	7	246.13	4512	6648	3	1.71	
	6	272.95	4512	7373	3	1.56	
	6	302.68	4512	8176	3	1.42	
	5.36	326.53	4512	8820	4	1.66	B_884GH80F4
	4.84	361.83	4512	9773	4	1.50	
	4.04	432.86	4512	11692	4	1.25	
	3.63	481.85	4512	13015	4	1.12	
	3.25	538.13	4512	14535	4	1.01	
	2.84	615.33	4512	14612	4	0.88	
	2.47	709.19	4512	14612	4	0.76	B_884GH80F4
	2.22	789.97	4512	14612	4	0.68	
	5.64	310.55	5586	8388	4	3.17	B_1084GH80F4
	5.23	334.68	5586	9040	4	2.94	
	4.67	374.95	5586	10128	4	2.62	
	4.10	427.31	5586	11542	4	2.30	
	3.77	464.52	5586	12547	4	2.12	
	3.16	554.54	5586	14978	4	1.77	
	2.75	636.88	5586	17203	4	1.54	
	2.44	718.24	5586	19400	4	1.37	
	2.11	830.63	5586	22436	4	1.18	
	1.84	951.46	5586	25700	4	1.03	
	1.61	1085.20	5586	26568	4	0.91	
	1.43	1228.03	5586	26568	4	0.80	
	1.24	1407.77	5586	26568	4	0.70	
	5.82	300.60	6907	8119	4	5.13	B_1284GH80F4
	5.04	346.89	6907	9370	4	4.44	
	4.64	377.09	6907	10186	4	4.09	
	4.04	433.18	6907	11700	4	3.56	
	3.43	510.41	6907	13786	4	3.02	
	3.06	572.81	6907	15472	4	2.69	
	2.68	653.45	6907	17650	4	2.36	

(B) - See footnotes page on inside back cover

RHB integral gearmotors

1750 RPM – 60 Hz

Input power (Hp)	Speed (RPM)	Ratio	OHL (LBF) (B)	Output torque (in-lb)	Gear stage	Service factor (SF)	Catalog number
0.75 (cont.)	2.36	740.12	6907	19991	4	2.08	B_1284GH80F4
	2.04	857.75	6907	23168	4	1.80	
	1.84	952.42	6907	25726	4	1.62	
	1.58	1105.88	6907	29871	4	1.39	
	1.40	1247.30	6907	33690	4	1.24	
	1.22	1429.26	6907	38605	4	1.08	
	1.07	1641.10	6907	41623	4	0.94	
	0.94	1856.00	6907	41623	4	0.83	
	0.82	2136.15	6907	41623	4	0.72	
	5.53	316.44	13027	8547	4	8.29	B_1484GH80F4
	4.81	363.83	13027	9827	4	7.21	
	4.31	406.30	13027	10975	4	6.46	
	3.78	462.98	13027	12505	4	5.67	
	3.36	520.67	13027	14064	4	5.04	
	2.86	611.73	13027	16523	4	4.29	
	2.49	702.08	13027	18964	4	3.74	
	2.23	783.52	13027	21164	4	3.35	
	1.94	903.16	13027	24395	4	2.90	
	1.70	1029.62	13027	27811	4	2.55	
	1.50	1163.54	13027	31428	4	2.25	
	1.31	1334.52	13027	36046	4	1.97	
	1.13	1554.16	13027	41979	4	1.69	
	1.03	1702.48	13027	45985	4	1.54	
	0.91	1925.48	13027	52009	4	1.36	
	0.77	2284.97	13027	61719	4	1.15	
	0.67	2593.20	13027	70044	4	1.01	
	0.61	2876.18	13027	70848	4	0.91	
	0.58	2999.41	13027	70848	5	0.87	B_1485GH80F4
	0.52	3361.65	13027	70848	5	0.78	
	0.46	3772.55	13027	70848	5	0.70	
	5.44	321.92	18949	8695	4	13.75	B_1684GH80F4
	4.76	367.99	18949	9940	4	12.03	
	4.26	410.86	18949	11098	4	10.77	
	3.68	476.13	18949	12861	4	9.30	
	3.37	518.74	18949	14012	4	8.53	
	3.19	548.26	18949	14809	4	8.07	
	2.84	616.75	18949	16659	4	7.18	
	2.48	705.01	18949	19043	4	6.28	
	2.19	797.85	18949	21551	4	5.55	
	1.95	897.80	18949	24250	4	4.93	
	1.70	1031.24	18949	27855	4	4.29	
	1.48	1181.28	18949	31907	4	3.75	
	1.31	1338.81	18949	36162	4	3.31	
	1.13	1542.38	18949	41661	4	2.87	
	0.99	1759.94	18949	47537	4	2.51	B_1684GH80F4
	0.91	1930.90	18949	52155	4	2.29	
	0.77	2279.59	18949	61573	4	1.94	
	0.66	2645.29	18949	71451	4	1.67	
	0.58	3023.12	18949	81657	4	1.46	
	0.67	2615.32	18949	70642	5	1.69	B_1685GH80F4
	0.58	3003.10	18949	81116	5	1.47	
	0.52	3333.45	18949	90039	5	1.33	
	0.45	3894.01	18949	105180	5	1.14	
	0.39	4496.84	18949	119556	5	0.98	
	0.35	5019.65	18949	119556	5	0.88	
	0.30	5804.70	18949	119556	5	0.76	
	0.27	6527.90	18949	119556	5	0.68	
	0.25	6920.19	18949	119556	5	0.64	
	0.23	7463.09	18949	119556	5	0.59	

(B) - See footnotes page on inside back cover

RHB integral gearmotors

1750 RPM – 60 Hz

Input power (Hp)	Speed (RPM)	Ratio	OHL (LBF) (B)	Output torque (in-lb)	Gear stage	Service factor (SF)	Catalog number
	310	5.65	589	203	3	2.46	
	281	6.22	589	224	3	2.46	
	242	7.22	620	260	3	2.46	
	224	7.82	620	282	3	2.45	
	198	8.85	620	319	3	2.45	
	180	9.72	620	350	3	2.46	
	163	10.72	620	386	3	2.46	
	152	11.50	617	414	3	2.46	
	138	12.65	617	456	3	2.46	
	119	14.69	617	529	3	2.46	
	110	15.91	617	573	3	2.46	
	97	17.99	726	648	3	2.46	
	88	19.78	726	712	3	2.46	B_383GH80G4
	80	21.81	726	785	3	2.46	
	72	24.16	726	870	3	2.46	
	65	26.90	726	969	3	2.28	
	61	28.72	926	1034	3	2.14	
	55	31.59	926	1138	3	1.94	
	48	36.69	926	1321	3	1.68	
	44	39.73	926	1431	3	1.55	
	39	44.94	1150	1618	3	1.37	
	35	49.38	1150	1778	3	1.24	
	32	54.47	1150	1962	3	1.13	
	29	60.33	1150	2173	3	1.02	
	242	7.22	1032	260	3	2.46	
	208	8.40	1032	303	3	2.45	
	188	9.32	1032	336	3	2.45	
	172	10.15	1032	366	3	2.45	
	146	11.95	1110	430	3	2.46	
	126	13.90	1110	501	3	2.46	
	113	15.42	1110	555	3	2.46	
	104	16.79	1110	605	3	2.46	
1	93	18.78	1149	676	3	2.40	
	85	20.54	1149	740	3	2.26	
	78	22.54	1149	812	3	2.12	
	70	24.85	1149	895	3	1.98	
	64	27.55	1149	992	3	1.84	
	61	28.90	1266	1041	3	2.46	B_483GH80G4
	52	33.60	1266	1210	3	2.46	
	47	37.28	1266	1343	3	2.46	
	43	40.60	1266	1462	3	2.46	
	39	45.41	1591	1635	3	2.44	
	35	49.65	1591	1788	3	2.23	
	32	54.49	1591	1962	3	2.03	
	29	60.08	1591	2164	3	1.84	
	26	66.60	1591	2399	3	1.66	
	23	75.45	1878	2717	3	1.47	
	21	83.25	1878	2998	3	1.33	
	19	94.12	1878	3390	3	1.17	
	16	107.47	1878	3870	3	1.03	
	300	5.83	2200	210	3	2.46	
	239	7.31	2200	263	3	2.46	
	215	8.12	2200	292	3	2.46	
	187	9.34	2200	336	3	2.46	
	174	10.05	2200	362	3	2.46	
	150	11.7	2200	421	3	2.46	
	136	12.86	2200	463	3	2.46	
	122	14.29	2200	515	3	2.46	B_583GH80G4
	107	16.43	2200	592	3	2.46	
	99	17.67	2200	636	3	2.46	
	85	20.59	2200	742	3	2.46	
	78	22.32	2200	804	3	2.46	
	72	24.29	2200	875	3	2.46	
	66	26.55	2200	956	3	2.46	
	53	33.31	2200	1200	3	2.46	

(B) - See footnotes page on inside back cover

RHB integral gearmotors

1750 RPM – 60 Hz

Input power (Hp)	Speed (RPM)	Ratio	OHL (LBF) (B)	Output torque (in-lb)	Gear stage	Service factor (SF)	Catalog number
1 (cont.)	47	37.01	2200	1333	3	2.46	B_583GH80G4
	41	42.57	2200	1533	3	2.46	
	33	53.34	2200	1921	3	2.46	
	30	57.83	2200	2083	3	2.46	
	28	62.92	2200	2266	3	2.38	
	25	68.74	2200	2476	3	2.18	
	23	75.45	2200	2717	3	1.99	
	21	83.28	2200	2999	3	1.8	
	19	93.96	2200	3384	3	1.59	
	17	103.33	2200	3721	3	1.45	
	15	114.4	2200	4120	3	1.31	
	13	134.17	2200	4832	3	1.11	
	12	148.05	2200	5332	3	1.01	
	326	5.36	2503	193	3	2.46	B_683GH80G4
	272	6.44	2503	232	3	2.46	
	231	7.58	2503	273	3	2.46	
	206	8.50	2503	306	3	2.46	
	184	9.52	2503	343	3	2.46	
	168	10.40	2503	375	3	2.45	
	147	11.94	2503	430	3	2.46	
	122	14.35	2503	517	3	2.46	
	104	16.89	2503	608	3	2.46	
	92	18.93	2503	682	3	2.46	
	82	21.22	2503	764	3	2.46	
	76	23.16	2503	834	3	2.46	
	69	25.42	2503	915	3	2.46	
	63	27.99	2503	1008	3	2.46	
	58	30.38	2503	1094	3	2.46	
	53	32.78	2503	1181	3	2.46	
	44	39.39	2503	1419	3	2.46	
	38	46.37	2503	1670	3	2.46	
	34	51.96	2503	1871	3	2.46	
	30	58.23	2503	2097	3	2.46	
	28	63.57	2503	2289	3	2.46	
	25	69.78	2503	2513	3	2.46	
	23	76.84	2503	2767	3	2.46	
	21	83.40	2503	3004	3	2.42	
	19	90.89	2503	3273	3	2.22	
	18	99.55	2503	3585	3	2.02	
	16	109.64	2503	3949	3	1.84	
	14	126.09	2503	4541	3	1.60	
	13	136.60	2503	4920	3	1.48	
	12	150.98	2503	5437	3	1.33	
	10	176.14	2503	6344	3	1.14	
	9	196.07	2503	7061	3	1.03	
	7.03	248.88	2503	7262	4	0.81	B_684GH80G4
	218	8.03	4512	289	3	2.46	B_883GH80G4
	186	9.41	4512	339	3	2.46	
	104	16.85	4512	607	3	2.46	
	89	19.75	4512	711	3	2.46	
	74	23.54	4512	848	3	2.46	
	69	25.53	4512	919	3	2.46	
	61	28.50	4512	1026	3	2.46	
	57	30.87	4512	1112	3	2.46	
	35	49.80	4512	1794	3	2.46	
	30	58.37	4512	2102	3	2.46	
	25	69.57	4512	2506	3	2.46	
	23	75.45	4512	2717	3	2.46	
	21	84.21	4512	3033	3	2.46	
	19	91.22	4512	3285	3	2.46	
	17	103.38	4512	3723	3	2.46	
	16	111.37	4512	4011	3	2.46	
	15	120.42	4512	4337	3	2.46	
	13	130.77	4512	4710	3	2.46	
	12	144.58	4512	5207	3	2.46	
	11	156.63	4512	5641	3	2.46	
	10	176.50	4512	6357	3	2.30	

(B) - See footnotes page on inside back cover

RHB integral gearmotors

1750 RPM – 60 Hz

Input power (Hp)	Speed (RPM)	Ratio	OHL (LBF) (B)	Output torque (in-lb)	Gear stage	Service factor (SF)	Catalog number
1 (cont.)	9	193.24	4512	6959	3	2.10	B_883GH80G4
	8	215.25	4512	7752	3	1.88	
	7	246.13	4512	8864	3	1.65	
	6	272.95	4512	9830	3	1.49	
	6	302.68	4512	10901	3	1.34	
	5.36	326.53	4512	11760	4	1.24	B_884GH80G4
	4.84	361.83	4512	13031	4	1.12	
	4.04	432.86	4512	14612	4	0.94	
	3.63	481.85	4512	14612	4	0.84	
	3.25	538.13	4512	14612	4	0.75	
	136	12.90	5586	465	3	2.45	B_1083GH80G4
	76	23.08	5586	831	3	2.46	
	66	26.48	5586	954	3	2.46	
	56	31.25	5586	1125	3	2.46	B_1083GH80G4
	52	33.87	5586	1220	3	2.46	
	29	61.22	5586	2205	3	2.46	
	25	70.24	5586	2530	3	2.46	
	21	82.90	5586	2986	3	2.46	
	19	89.85	5586	3236	3	2.46	
	18	99.90	5586	3598	3	2.46	
	16	108.52	5586	3908	3	2.46	
	15	120.03	5586	4323	3	2.46	
	14	128.86	5586	4641	3	2.46	
	13	138.87	5586	5001	3	2.46	
	12	150.31	5586	5413	3	2.46	
	11	163.51	5586	5889	3	2.46	
	10	178.90	5586	6443	3	2.46	
	9	201.11	5586	7243	3	2.46	
	8	219.64	5586	7910	3	2.46	
	7	243.47	5586	8768	3	2.37	
	6	278.10	5586	10016	3	2.17	
	6	307.24	5586	11065	3	2.03	
	5.64	310.55	5586	11184	4	2.38	B_1084GH80G4
	5.23	334.68	5586	12053	4	2.20	
	4.67	374.95	5586	13504	4	1.97	
	4.10	427.31	5586	15389	4	1.73	
	3.77	464.52	5586	16729	4	1.59	
	3.16	554.54	5586	19971	4	1.33	
	2.75	636.88	5586	22937	4	1.16	
	2.44	718.24	5586	25867	4	1.03	
	2.11	830.63	5586	26568	4	0.89	
	1.84	951.46	5586	26568	4	0.78	
	5.82	300.60	6907	10826	4	3.84	B_1284GH80G4
	5.04	346.89	6907	12493	4	3.33	
	4.64	377.09	6907	13581	4	3.06	
	4.04	433.18	6907	15601	4	2.67	
	3.43	510.41	6907	18382	4	2.26	
	3.06	572.81	6907	20629	4	2.02	
	2.68	653.45	6907	23534	4	1.77	
	2.36	740.12	6907	26655	4	1.56	
	2.04	857.75	6907	30891	4	1.35	
	1.84	952.42	6907	34301	4	1.21	
	1.58	1105.88	6907	39828	4	1.05	
	1.40	1247.30	6907	41623	4	0.93	
	1.22	1429.26	6907	41623	4	0.81	
	5.53	316.44	13027	11396	4	6.22	B_1484GH80G4
	4.81	363.83	13027	13103	4	5.41	
	4.31	406.30	13027	14633	4	4.84	
	3.78	462.98	13027	16674	4	4.25	
	3.36	520.67	13027	18751	4	3.78	
	2.86	611.73	13027	22031	4	3.22	
	2.49	702.08	13027	25285	4	2.80	
	2.23	783.52	13027	28218	4	2.51	
	1.94	903.16	13027	32527	4	2.18	
	1.70	1029.62	13027	37081	4	1.91	

(B) - See footnotes page on inside back cover

RHB integral gearmotors

1750 RPM – 60 Hz

Input power (Hp)	Speed (RPM)	Ratio	OHL (LBF) (B)	Output torque (in-lb)	Gear stage	Service factor (SF)	Catalog number
1 (cont.)	1.50	1163.54	13027	41904	4	1.69	B_1484GH80G4
	1.31	1334.52	13027	48062	4	1.47	
	1.13	1554.16	13027	55972	4	1.27	
	1.03	1702.48	13027	61314	4	1.16	
	0.91	1925.48	13027	69345	4	1.02	
	0.77	2284.97	13027	70848	4	0.86	
	0.67	2593.20	13027	70848	4	0.76	
	5.44	321.92	18949	11594	4	10.31	B_1684GH80G4
	4.76	367.99	18949	13253	4	9.02	
	4.26	410.86	18949	14797	4	8.08	
	3.68	476.13	18949	17148	4	6.97	
	3.37	518.74	18949	18682	4	6.40	
	3.19	548.26	18949	19745	4	6.05	
	2.84	616.75	18949	22212	4	5.38	B_1684GH80G4
	2.48	705.01	18949	25391	4	4.71	
	2.19	797.85	18949	28734	4	4.16	
	1.95	897.80	18949	32334	4	3.70	
	1.70	1031.24	18949	37140	4	3.22	
	1.48	1181.28	18949	42543	4	2.81	
	1.31	1338.81	18949	48216	4	2.48	
	1.13	1542.38	18949	55548	4	2.15	
	0.99	1759.94	18949	63383	4	1.89	
	0.91	1930.90	18949	69540	4	1.72	
	0.77	2279.59	18949	82098	4	1.46	
	0.66	2645.29	18949	95268	4	1.25	
	0.58	3023.12	18949	108876	4	1.10	
	0.67	2615.32	18949	94189	5	1.27	B_1685GH80G4
	0.58	3003.10	18949	108154	5	1.11	
	0.52	3333.45	18949	119556	5	1.00	
	0.45	3894.01	18949	119556	5	0.85	
	0.39	4496.84	18949	119556	5	0.74	
	0.35	5019.65	18949	119556	5	0.66	
	0.30	5804.70	18949	119556	5	0.57	
	0.27	6527.90	18949	119556	5	0.51	
1.5	310	5.65	589	305	3	3.34	B_383GH90H4
	281	6.22	589	336	3	3.33	
	242	7.22	620	390	3	3.34	
	224	7.82	620	422	3	3.33	
	198	8.85	620	478	3	2.94	
	180	9.72	620	525	3	2.68	
	163	10.72	620	579	3	2.43	
	152	11.50	617	621	3	3.34	
	138	12.65	617	683	3	3.24	
	119	14.69	617	794	3	2.79	
	110	15.91	617	859	3	2.58	
	97	17.99	726	972	3	2.28	
	88	19.78	726	1069	3	2.07	
	80	21.81	726	1178	3	1.88	
	72	24.16	726	1305	3	1.70	
	65	26.90	726	1453	3	1.52	
	61	28.72	926	1551	3	1.43	
	55	31.59	926	1707	3	1.30	
	48	36.69	926	1982	3	1.12	
	44	39.73	926	2146	3	1.03	
	242	7.22	1032	390	3	3.34	B_483GH90H4
	208	8.40	1032	454	3	3.33	
	188	9.32	1032	503	3	3.34	
	172	10.15	1032	548	3	3.33	
	146	11.95	1110	646	3	3.33	
	126	13.90	1110	751	3	3.33	
	113	15.42	1110	833	3	3.34	
	104	16.79	1110	907	3	3.33	
	93	18.78	1149	1015	3	3.17	
	85	20.54	1149	1110	3	3.04	
	78	22.54	1149	1218	3	2.90	
	70	24.85	1149	1342	3	2.77	
	64	27.55	1149	1488	3	2.63	

(B) - See footnotes page on inside back cover

RHB integral gearmotors

1750 RPM – 60 Hz

Input power (Hp)	Speed (RPM)	Ratio	OHL (LBF) (B)	Output torque (in-lb)	Gear stage	Service factor (SF)	Catalog number
1.5 (cont.)	61	28.90	1266	1561	3	2.55	B_483GH90H4
	52	33.60	1266	1815	3	2.19	
	47	37.28	1266	2014	3	1.98	
	43	40.60	1266	2193	3	1.82	
	39	45.41	1591	2453	3	1.62	
	35	49.65	1591	2682	3	1.49	
	32	54.49	1591	2944	3	1.35	
	29	60.08	1591	3246	3	1.23	
	26	66.60	1591	3598	3	1.11	
	300	5.83	2200	315	3	3.34	B_583GH90H4
	239	7.31	2200	395	3	3.34	
	215	8.12	2200	439	3	3.34	
	187	9.34	2200	505	3	3.34	
	174	10.05	2200	543	3	3.34	
	150	11.7	2200	632	3	3.34	
	136	12.86	2200	695	3	3.34	
	122	14.29	2200	772	3	3.34	
	107	16.43	2200	888	3	3.34	
	99	17.67	2200	955	3	3.34	
	85	20.59	2200	1112	3	3.34	
	78	22.32	2200	1206	3	3.34	
	72	24.29	2200	1312	3	3.34	
	66	26.55	2200	1434	3	3.34	
	53	33.31	2200	1799	3	3	
	47	37.07	2200	2003	3	2.7	
	41	42.57	2200	2300	3	2.35	
	33	53.34	2200	2882	3	1.87	
	30	57.83	2200	3124	3	1.73	
	28	62.92	2200	3399	3	1.59	
	25	68.74	2200	3713	3	1.45	
	23	75.45	2200	4076	3	1.33	
	21	83.28	2200	4499	3	1.2	
	19	93.96	2200	5076	3	1.06	
	326	5.36	2503	290	3	3.33	B_683GH90H4
	272	6.44	2503	348	3	3.33	
	231	7.58	2503	409	3	3.34	
	206	8.50	2503	459	3	3.34	
	184	9.52	2503	514	3	3.34	
	168	10.40	2503	562	3	3.33	
	147	11.94	2503	645	3	3.34	
	122	14.35	2503	775	3	3.34	
	104	16.89	2503	912	3	3.34	
	92	18.93	2503	1023	3	3.33	
	82	21.22	2503	1146	3	3.34	
	76	23.16	2503	1251	3	3.34	
	69	25.42	2503	1373	3	3.34	
	63	27.99	2503	1512	3	3.34	
	58	30.38	2503	1641	3	3.34	
	53	32.78	2503	1771	3	3.34	
	44	39.39	2503	2128	3	3.33	
	38	46.37	2503	2505	3	2.90	
	34	51.96	2503	2807	3	2.59	
	30	58.23	2503	3146	3	2.31	
	28	63.57	2503	3434	3	2.11	
	25	69.78	2503	3770	3	1.93	
	23	76.84	2503	4151	3	1.75	
	21	83.40	2503	4505	3	1.61	
	19	90.89	2503	4910	3	1.48	
	18	99.55	2503	5378	3	1.35	
	16	109.64	2503	5923	3	1.23	
	14	126.09	2503	6812	3	1.07	
	218	8.03	4512	434	3	3.33	B_883GH90H4
	186	9.41	4512	508	3	3.34	
	104	16.85	4512	910	3	3.34	
	89	19.75	4512	1067	3	3.34	
	74	23.54	4512	1272	3	3.33	
	69	25.53	4512	1379	3	3.34	

(B) - See footnotes page on inside back cover

RHB integral gearmotors

1750 RPM – 60 Hz

Input power (Hp)	Speed (RPM)	Ratio	OHL (LBF) (B)	Output torque (in-lb)	Gear stage	Service factor (SF)	Catalog number
1.5 (cont.)	61	28.50	4512	1540	3	3.33	B_883GH90H4
	57	30.87	4512	1668	3	3.33	
	35	49.80	4512	2690	3	3.34	
	30	58.37	4512	3153	3	3.34	
	25	69.57	4512	3758	3	3.34	
	23	75.45	4512	4076	3	3.34	
	21	84.21	4512	4549	3	3.21	
	19	91.22	4512	4928	3	2.96	
	17	103.38	4512	5585	3	2.61	
	16	111.37	4512	6016	3	2.43	
	15	120.42	4512	6505	3	2.25	
	13	130.77	4512	7064	3	2.07	
	12	144.58	4512	7810	3	1.87	
	11	156.63	4512	8461	3	1.73	
	10	176.50	4512	9535	3	1.53	
	9	193.24	4512	10439	3	1.40	
	8	215.25	4512	11628	3	1.26	
	7	246.13	4512	13296	3	1.10	
	5.36	326.53	4512	14612	4	0.83	B_884GH90H4
	4.84	361.83	4512	14612	4	0.75	
	136	12.90	5586	697	3	3.33	B_1083GH90H4
	76	23.08	5586	1247	3	3.33	
	66	26.48	5586	1430	3	3.34	
	56	31.25	5586	1688	3	3.34	
	52	33.87	5586	1830	3	3.34	
	29	61.22	5586	3307	3	3.34	
	25	70.24	5586	3794	3	3.34	
	21	82.90	5586	4478	3	3.34	
	19	89.85	5586	4854	3	3.34	
	18	99.90	5586	5397	3	3.34	
	16	108.52	5586	5862	3	3.34	
	15	120.03	5586	6484	3	3.34	
	14	128.86	5586	6961	3	3.34	
	13	138.87	5586	7502	3	3.22	
	12	150.31	5586	8120	3	3.09	
	11	163.51	5586	8833	3	2.95	
	10	178.90	5586	9664	3	2.75	B_1083GH90H4
	9	201.11	5586	10864	3	2.44	
	8	219.64	5586	11865	3	2.24	
	7	243.47	5586	13153	3	2.02	
	6	278.10	5586	15023	3	1.77	
	6	307.24	5586	16598	3	1.60	
	5.64	310.55	5586	16776	4	1.58	B_1084GH90H4
	5.23	334.68	5586	18080	4	1.47	
	4.67	374.95	5586	20255	4	1.31	
	4.10	427.31	5586	23084	4	1.15	
	3.77	464.52	5586	25094	4	1.06	
	3.16	554.54	5586	26568	4	0.89	
	2.75	636.88	5586	26568	4	0.77	
	2.44	718.24	5586	26568	4	0.68	
	65	27.02	6907	1460	3	3.33	B_1283GH90H4
	57	30.61	6907	1654	3	3.33	
	49	35.92	6907	1940	3	3.34	
	45	39.19	6907	2117	3	3.34	
	20	85.98	6907	4645	3	3.34	
	18	97.44	6907	5264	3	3.34	
	15	114.34	6907	6177	3	3.34	
	14	124.73	6907	6738	3	3.34	
	13	136.06	6907	7350	3	3.34	
	12	146.84	6907	7933	3	3.34	
	11	164.11	6907	8865	3	3.34	
	10	175.8	6907	9497	3	3.34	
	9	189.04	6907	10212	3	3.21	
	9	204.18	6907	11030	3	3.07	
	8	221.64	6907	11973	3	2.93	
	7	242.02	6907	13074	3	2.79	

(B) - See footnotes page on inside back cover

RHB integral gearmotors

1750 RPM – 60 Hz

Input power (Hp)	Speed (RPM)	Ratio	OHL (LBF) (B)	Output torque (in-lb)	Gear stage	Service factor (SF)	Catalog number
1.5 (cont.)	6	270.90	6907	14634	3	2.62	B_1283GH90H4
	6	295.38	6907	15957	3	2.49	
	5.82	300.60	6907	16239	4	2.56	B_1284GH90H4
	5.04	346.89	6907	18739	4	2.22	
	4.64	377.09	6907	20371	4	2.04	
	4.04	433.18	6907	23401	4	1.78	
	3.43	510.41	6907	27573	4	1.51	
	3.06	572.81	6907	30944	4	1.35	
	2.68	653.45	6907	35301	4	1.18	
	2.36	740.12	6907	39982	4	1.04	
	2.04	857.75	6907	41623	4	0.90	
	1.84	952.42	6907	41623	4	0.81	
	1.58	1105.88	6907	41623	4	0.70	
	5.53	316.44	13027	17095	4	4.14	B_1484GH90H4
	4.81	363.83	13027	19655	4	3.60	
	4.31	406.30	13027	21949	4	3.23	
	3.78	462.98	13027	25011	4	2.83	
	3.36	520.67	13027	28127	4	2.52	
	2.86	611.73	13027	33047	4	2.14	
	2.49	702.08	13027	37927	4	1.87	
	2.23	783.52	13027	42327	4	1.67	
	1.94	903.16	13027	48790	4	1.45	
	1.70	1029.62	13027	55622	4	1.27	
	1.50	1163.54	13027	62856	4	1.13	
	1.31	1334.52	13027	70848	4	0.98	
	1.13	1554.16	13027	70848	4	0.84	
	1.03	1702.48	13027	70848	4	0.77	
	0.91	1925.48	13027	70848	4	0.68	
	5.44	321.92	18949	17390	4	6.87	B_1684GH90H4
	4.76	367.99	18949	19879	4	6.01	
	4.26	410.86	18949	22195	4	5.39	
	3.68	476.13	18949	25721	4	4.65	
	3.37	518.74	18949	28023	4	4.27	
	3.19	548.26	18949	29618	4	4.04	
	2.84	616.75	18949	33317	4	3.59	
	2.48	705.01	18949	38086	4	3.14	
	2.19	797.85	18949	43101	4	2.77	B_1684GH90H4
	1.95	897.80	18949	48500	4	2.47	
	1.70	1031.24	18949	55709	4	2.15	
	1.48	1181.28	18949	63814	4	1.87	
	1.31	1338.81	18949	72324	4	1.65	
	1.13	1542.38	18949	83321	4	1.43	
	0.99	1759.94	18949	95075	4	1.26	
	0.91	1930.90	18949	104310	4	1.15	
	0.77	2279.59	18949	119556	4	0.97	
	0.66	2645.29	18949	119556	4	0.84	
	0.58	3023.12	18949	119556	4	0.73	
	0.67	2615.32	18949	119556	5	0.85	B_1685GH90H4
	0.58	3003.10	18949	119556	5	0.74	
	0.52	3333.45	18949	119556	5	0.66	
2	310	5.65	589	407	3	2.50	B_383GH90I4
	281	6.22	589	448	3	2.50	
	242	7.22	620	520	3	2.50	
	224	7.82	620	563	3	2.49	
	198	8.85	620	637	3	2.20	
	180	9.72	620	700	3	2.01	
	163	10.72	620	772	3	1.82	
	152	11.50	617	828	3	2.50	
	138	12.65	617	911	3	2.43	
	119	14.69	617	1058	3	2.09	
	110	15.91	617	1146	3	1.93	
	97	17.99	726	1296	3	1.71	
	88	19.78	726	1425	3	1.55	
	80	21.81	726	1571	3	1.41	
	72	24.16	726	1740	3	1.27	
	65	26.90	726	1938	3	1.14	B_383GH90I4
	61	28.72	926	2069	3	1.07	

(B) - See footnotes page on inside back cover

RHB integral gearmotors

1750 RPM – 60 Hz

Input power (Hp)	Speed (RPM)	Ratio	OHL (LBF) (B)	Output torque (in-lb)	Gear stage	Service factor (SF)	Catalog number
2 (cont.)	242	7.22	1032	520	3	2.50	B_483GH90I4
	208	8.40	1032	605	3	2.50	
	188	9.32	1032	671	3	2.50	
	172	10.15	1032	731	3	2.49	
	146	11.95	1110	861	3	2.50	
	126	13.90	1110	1001	3	2.50	
	113	15.42	1110	1111	3	2.50	
	104	16.79	1110	1209	3	2.50	
	93	18.78	1149	1353	3	2.38	
	85	20.54	1149	1479	3	2.28	
	78	22.54	1149	1624	3	2.18	
	70	24.85	1149	1790	3	2.08	
	64	27.55	1149	1984	3	1.97	
	61	28.90	1266	2082	3	1.91	
	52	33.60	1266	2420	3	1.65	
	47	37.28	1266	2685	3	1.48	
	43	40.60	1266	2924	3	1.36	
	39	45.41	1591	3271	3	1.22	
	35	49.65	1591	3576	3	1.11	
	32	54.49	1591	3925	3	1.01	
	300	5.83	2200	420	3	2.51	B_583GH90I4
	239	7.31	2200	527	3	2.51	
	215	8.12	2200	585	3	2.51	
	187	9.34	2200	673	3	2.51	
	174	10.05	2200	724	3	2.51	
	150	11.7	2200	843	3	2.51	
	136	12.86	2200	926	3	2.51	
	122	14.29	2200	1029	3	2.51	
	107	16.43	2200	1183	3	2.51	
	99	17.67	2200	1273	3	2.51	
	85	20.59	2200	1483	3	2.51	
	78	22.32	2200	1608	3	2.51	
	72	24.29	2200	1750	3	2.51	
	66	26.55	2200	1912	3	2.51	
	53	33.31	2200	2399	3	2.25	
	47	37.07	2200	2670	3	2.03	
	41	42.57	2200	3066	3	1.76	
	33	53.34	2200	3842	3	1.41	
	30	57.83	2200	4165	3	1.3	
	28	62.92	2200	4532	3	1.19	
	25	68.74	2200	4951	3	1.09	
	326	5.36	2503	386	3	2.50	B_683GH90I4
	272	6.44	2503	464	3	2.50	
	231	7.58	2503	546	3	2.50	
	206	8.50	2503	612	3	2.50	
	184	9.52	2503	686	3	2.50	
	168	10.40	2503	749	3	2.50	
	147	11.94	2503	860	3	2.50	
	122	14.35	2503	1034	3	2.50	
	104	16.89	2503	1217	3	2.50	
	92	18.93	2503	1364	3	2.50	
	82	21.22	2503	1528	3	2.50	
	76	23.16	2503	1668	3	2.50	
	69	25.42	2503	1831	3	2.50	
	63	27.99	2503	2016	3	2.50	B_683GH90I4
	58	30.38	2503	2188	3	2.50	
	53	32.78	2503	2361	3	2.50	
	44	39.39	2503	2837	3	2.50	
	38	46.37	2503	3340	3	2.17	
	34	51.96	2503	3743	3	1.94	
	30	58.23	2503	4194	3	1.73	
	28	63.57	2503	4579	3	1.59	
	25	69.78	2503	5026	3	1.44	
	23	76.84	2503	5535	3	1.31	B_683GH90I4
	21	83.40	2503	6007	3	1.21	
	19	90.89	2503	6547	3	1.11	
	18	99.55	2503	7170	3	1.01	

(B) - See footnotes page on inside back cover

RHB integral gearmotors

1750 RPM – 60 Hz

Input power (Hp)	Speed (RPM)	Ratio	OHL (LBF) (B)	Output torque (in-lb)	Gear stage	Service factor (SF)	Catalog number
2 (cont.)	218	8.03	4512	578	3	2.50	B_883GH90I4
	186	9.41	4512	678	3	2.50	
	104	16.85	4512	1214	3	2.50	
	89	19.75	4512	1423	3	2.50	
	74	23.54	4512	1696	3	2.50	
	69	25.53	4512	1839	3	2.50	
	61	28.50	4512	2053	3	2.50	
	57	30.87	4512	2224	3	2.50	
	35	49.80	4512	3587	3	2.50	
	30	58.37	4512	4204	3	2.50	
	25	69.57	4512	5011	3	2.50	
	23	75.45	4512	5435	3	2.50	
	21	84.21	4512	6066	3	2.41	
	19	91.22	4512	6570	3	2.22	
	17	103.38	4512	7446	3	1.96	
	16	111.37	4512	8022	3	1.82	
	15	120.42	4512	8674	3	1.68	
	13	130.77	4512	9419	3	1.55	
	12	144.58	4512	10414	3	1.40	
	11	156.63	4512	11282	3	1.29	
	10	176.50	4512	12713	3	1.15	
	9	193.24	4512	13919	3	1.05	
	136	12.90	5586	929	3	2.50	B_1083GH90I4
	76	23.08	5586	1662	3	2.50	
	66	26.48	5586	1907	3	2.50	
	56	31.25	5586	2251	3	2.50	
	52	33.87	5586	2440	3	2.50	
	29	61.22	5586	4410	3	2.50	
	25	70.24	5586	5059	3	2.50	
	21	82.90	5586	5971	3	2.50	
	19	89.85	5586	6472	3	2.50	
	18	99.90	5586	7196	3	2.50	
	16	108.52	5586	7817	3	2.50	
	15	120.03	5586	8646	3	2.50	
	14	128.86	5586	9282	3	2.50	
	13	138.87	5586	10003	3	2.42	
	12	150.31	5586	10827	3	2.31	
	11	163.51	5586	11777	3	2.21	
	10	178.90	5586	12886	3	2.06	
	9	201.11	5586	14486	3	1.83	
	8	219.64	5586	15820	3	1.68	
	7	243.47	5586	17537	3	1.51	
	6	278.10	5586	20031	3	1.33	
	6	307.24	5586	22130	3	1.20	
	5.64	310.55	5586	22369	4	1.19	B_1084GH90I4
	5.23	334.68	5586	24106	4	1.10	
	4.67	374.95	5586	26568	4	0.98	
	4.10	427.31	5586	26568	4	0.86	
	3.77	464.52	5586	26568	4	0.79	
	65	27.02	6907	1946	3	2.50	B_1283GH90I4
	57	30.61	6907	2205	3	2.50	
	49	35.92	6907	2587	3	2.50	
	45	39.19	6907	2823	3	2.50	
	20	85.98	6907	6193	3	2.50	B_1283GH90I4
	18	97.44	6907	7018	3	2.50	
	15	114.34	6907	8236	3	2.50	
	14	124.73	6907	8984	3	2.50	
	13	136.06	6907	9800	3	2.50	
	12	146.84	6907	10577	3	2.50	
	11	164.11	6907	11821	3	2.50	
	10	175.80	6907	12663	3	2.50	
	9	189.04	6907	13616	3	2.41	
	9	204.18	6907	14707	3	2.30	B_1283GH90I4
	8	221.64	6907	15964	3	2.20	
	7	242.02	6907	17432	3	2.09	
	6	270.90	6907	19513	3	1.96	
	6	295.38	6907	21276	3	1.87	

(B) - See footnotes page on inside back cover

RHB integral gearmotors

1750 RPM – 60 Hz

Input power (Hp)	Speed (RPM)	Ratio	OHL (LBF) (B)	Output torque (in-lb)	Gear stage	Service factor (SF)	Catalog number
2 (cont.)	5.82	300.60	6907	21652	4	1.92	B_1284GH90I4
	5.04	346.89	6907	24986	4	1.67	
	4.64	377.09	6907	27161	4	1.53	
	4.04	433.18	6907	31201	4	1.33	
	3.43	510.41	6907	36764	4	1.13	
	3.06	572.81	6907	41259	4	1.01	
	2.68	653.45	6907	41623	4	0.88	
	2.36	740.12	6907	41623	4	0.78	
	5.53	316.44	13027	22793	4	3.11	B_1484GH90I4
	4.81	363.83	13027	26206	4	2.70	
	4.31	406.30	13027	29266	4	2.42	
	3.78	462.98	13027	33348	4	2.12	
	3.36	520.67	13027	37503	4	1.89	
	2.86	611.73	13027	44062	4	1.61	
	2.49	702.08	13027	50570	4	1.40	
	2.23	783.52	13027	56436	4	1.26	
	1.94	903.16	13027	65053	4	1.09	
	1.70	1029.62	13027	70848	4	0.96	
	1.50	1163.54	13027	70848	4	0.85	
	5.44	321.92	18949	23187	4	5.16	B_1684GH90I4
	4.76	367.99	18949	26506	4	4.51	
	4.26	410.86	18949	29594	4	4.04	
	3.68	476.13	18949	34295	4	3.49	
	3.37	518.74	18949	37364	4	3.20	
	3.19	548.26	18949	39490	4	3.03	
	2.84	616.75	18949	44423	4	2.69	
	2.48	705.01	18949	50781	4	2.35	
	2.19	797.85	18949	57468	4	2.08	
	1.95	897.80	18949	64667	4	1.85	
	1.70	1031.24	18949	74279	4	1.61	
	1.48	1181.28	18949	85086	4	1.41	
	1.31	1338.81	18949	96432	4	1.24	
	1.13	1542.38	18949	111095	4	1.08	
	0.99	1759.94	18949	119556	4	0.94	
	0.91	1930.90	18949	119556	4	0.86	
3	310	5.65	589	610	3	1.87	B_383GH100J4
	281	6.22	589	672	3	1.75	
	242	7.22	620	780	3	1.59	
	224	7.82	620	845	3	1.50	
	198	8.85	620	956	3	1.38	
	180	9.72	620	1050	3	1.30	
	163	10.72	620	1158	3	1.21	
	152	11.50	617	1242	3	1.78	
	138	12.65	617	1367	3	1.62	
	119	14.69	617	1587	3	1.39	
	110	15.91	617	1719	3	1.29	
	97	17.99	726	1944	3	1.14	
	88	19.78	726	2137	3	1.04	
	242	7.22	1032	780	3	3.30	B_483GH100J4
	208	8.40	1032	908	3	2.83	
	188	9.32	1032	1007	3	2.55	
	172	10.15	1032	1097	3	2.34	
	146	11.95	1110	1291	3	2.90	
	126	13.90	1110	1502	3	2.61	
	113	15.42	1110	1666	3	2.39	
	104	16.79	1110	1814	3	2.20	
	93	18.78	1149	2029	3	1.96	
	85	20.54	1149	2219	3	1.79	
	78	22.54	1149	2435	3	1.64	B_483GH100J4
	70	24.85	1149	2685	3	1.48	
	64	27.55	1149	2977	3	1.34	
	61	28.90	1266	3122	3	1.28	
	52	33.60	1266	3630	3	1.10	

(B) - See footnotes page on inside back cover

RHB integral gearmotors

1750 RPM – 60 Hz

Input power (Hp)	Speed (RPM)	Ratio	OHL (LBF) (B)	Output torque (in-lb)	Gear stage	Service factor (SF)	Catalog number
3 (cont.)	300	5.83	2200	630	3	3.45	B_583GH100J4
	239	7.31	2200	790	3	3.45	
	215	8.12	2200	877	3	3.45	
	187	9.34	2200	1009	3	3.23	
	174	10.05	2200	1086	3	3	
	150	11.7	2200	1264	3	2.57	
	136	12.86	2200	1389	3	3.45	
	122	14.29	2200	1544	3	3.45	
	107	16.43	2200	1775	3	3.04	
	99	17.67	2200	1909	3	2.83	
	85	20.59	2200	2225	3	2.43	
	78	22.32	2200	2412	3	2.24	
	72	24.29	2200	2624	3	2.06	
	66	26.55	2200	2869	3	1.88	
	53	33.31	2200	3599	3	1.5	
	47	37.07	2200	4005	3	1.35	
	41	42.57	2200	4599	3	1.17	
	326	5.36	2503	579	3	3.45	B_683GH100J4
	272	6.44	2503	696	3	3.45	
	231	7.58	2503	819	3	3.45	
	206	8.50	2503	918	3	3.45	
	184	9.52	2503	1029	3	3.45	
	168	10.40	2503	1124	3	3.45	
	147	11.94	2503	1290	3	3.45	
	122	14.35	2503	1550	3	3.45	
	104	16.89	2503	1825	3	3.45	
	92	18.93	2503	2045	3	3.31	
	82	21.22	2503	2293	3	3.05	
	76	23.16	2503	2502	3	2.87	
	69	25.42	2503	2746	3	2.64	
	63	27.99	2503	3024	3	2.40	
	58	30.38	2503	3282	3	2.21	
	53	32.78	2503	3542	3	1.98	
	44	39.39	2503	4256	3	1.71	
	38	46.37	2503	5010	3	1.45	
	34	51.96	2503	5614	3	1.29	
	30	58.23	2503	6291	3	1.15	
	28	63.57	2503	6868	3	1.06	
	316	5.54	4505	599	3	3.45	B_883GH100J4
	262	6.69	4505	723	3	3.45	
	218	8.03	4512	868	3	3.45	
	186	9.41	4512	1017	3	3.45	
	150	11.64	4512	1258	3	3.45	
	125	14.04	4512	1517	3	3.45	
	104	16.85	4512	1821	3	3.45	
	89	19.75	4512	2134	3	3.45	
	74	23.54	4512	2543	3	3.45	
	69	25.53	4512	2758	3	3.45	
	61	28.50	4512	3079	3	3.31	
	57	30.87	4512	3335	3	3.19	
	51	34.40	4512	3717	3	3.45	
	42	41.50	4512	4484	3	3.26	
	35	49.80	4512	5381	3	2.71	
	30	58.37	4512	6306	3	2.32	
	25	69.57	4512	7517	3	1.94	
	23	75.45	4512	8152	3	1.79	
	21	84.21	4512	9098	3	1.61	
	19	91.22	4512	9856	3	1.48	
	17	103.38	4512	11169	3	1.31	
	16	111.37	4512	12033	3	1.21	B_883GH100J4
	15	120.42	4512	13011	3	1.12	
	13	130.77	4512	14129	3	1.03	
	187	9.36	5586	1011	3	3.45	B_1083GH100J4
	160	10.97	5586	1185	3	3.45	
	136	12.90	5586	1394	3	3.45	
	104	16.75	5586	1810	3	3.45	

(B) - See footnotes page on inside back cover

RHB integral gearmotors

1750 RPM – 60 Hz

Input power (Hp)	Speed (RPM)	Ratio	OHL (LBF) (B)	Output torque (in-lb)	Gear stage	Service factor (SF)	Catalog number
3 (cont.)	89	19.63	5586	2121	3	3.45	B_1083GH100J4
	76	23.08	5586	2494	3	3.45	
	66	26.48	5586	2861	3	3.45	
	56	31.25	5586	3376	3	3.45	
	52	33.87	5586	3659	3	3.45	
	39	44.44	5586	4801	3	3.45	
	34	52.08	5586	5627	3	3.45	
	29	61.22	5586	6614	3	3.45	
	25	70.24	5586	7589	3	3.45	
	21	82.90	5586	8957	3	2.96	
	19	89.85	5586	9708	3	2.74	
	18	99.90	5586	10793	3	2.46	
	16	108.52	5586	11725	3	2.26	
	15	120.03	5586	12968	3	2.05	
	14	128.86	5586	13922	3	1.91	
	13	138.87	5586	15004	3	1.77	
	12	150.31	5586	16240	3	1.64	
	11	163.51	5586	17666	3	1.50	
	10	178.90	5586	19329	3	1.37	
	9	201.11	5586	21728	3	1.22	
	8	219.64	5586	23731	3	1.12	
	7	243.47	5586	26305	3	1.01	
	5.64	310.55	5586	26568	4	0.79	B_1084GH100J4
	5.23	334.68	5586	26568	4	0.73	
	161	10.88	6907	1176	3	3.45	B_1283GH100J4
	139	12.56	6907	1357	3	3.45	
	88	19.92	6907	2152	3	3.45	
	76	22.99	6907	2484	3	3.45	
	65	27.02	6907	2919	3	3.45	
	57	30.61	6907	3307	3	3.45	
	49	35.92	6907	3881	3	3.45	
	45	39.19	6907	4234	3	3.45	
	28	63.41	6907	6851	3	3.45	
	24	73.18	6907	7907	3	3.45	
	20	85.98	6907	9290	3	3.45	
	18	97.44	6907	10528	3	3.45	
	15	114.34	6907	12354	3	3.37	
	14	124.73	6907	13476	3	3.09	
	13	136.06	6907	14700	3	2.83	
	12	146.84	6907	15865	3	2.62	
	11	164.11	6907	17731	3	2.35	
	10	175.80	6907	18994	3	2.19	
	9	189.04	6907	20424	3	2.04	
	9	204.18	6907	22060	3	1.89	
	8	221.64	6907	23947	3	1.74	
	7	242.02	6907	26149	3	1.59	
	6	270.90	6907	29269	3	1.42	
	6	295.38	6907	31914	3	1.30	
	5.82	300.60	6907	32478	4	1.28	B_1284GH100J4
	5.04	346.89	6907	37479	4	1.11	
	4.64	377.09	6907	40742	4	1.02	
	4.04	433.18	6907	41623	4	0.89	
	3.43	510.41	6907	41623	4	0.75	
	3.06	572.81	6907	41623	4	0.67	
	75	23.19	11951	2506	3	3.45	B_1483GH100J4
	66	26.58	11951	2872	3	3.45	
	24	73.80	13027	7974	3	3.45	
	21	84.61	13027	9142	3	3.45	
	17	101.53	13027	10970	3	3.45	
	16	112.35	13027	12139	3	3.45	
	13	131.49	13027	14207	3	3.45	
	12	142.41	13027	15386	3	3.36	
	11	158.93	13027	17171	3	3.25	
	10	168.50	13027	18205	3	3.13	

(B) - See footnotes page on inside back cover

RHB integral gearmotors

1750 RPM – 60 Hz

Input power (Hp)	Speed (RPM)	Ratio	OHL (LBF) (B)	Output torque (in-lb)	Gear stage	Service factor (SF)	Catalog number
3 (cont.)	9	191.02	13027	20638	3	3.01	B_1483GH100J4
	9	204.38	13027	22082	3	2.85	
	8	214.96	13027	23225	3	2.73	
	8	231.95	13027	25061	3	2.55	
	7	251.55	13027	27178	3	2.38	
	6	274.42	13027	29649	3	2.21	
	6	306.08	13027	33070	3	2.00	
	5.53	316.44	13027	34189	4	2.07	B_1484GH100J4
	4.81	363.83	13027	39310	4	1.80	
	4.31	406.30	13027	43898	4	1.61	
	3.78	462.98	13027	50021	4	1.42	
	3.36	520.67	13027	56254	4	1.26	
	2.86	611.73	13027	66093	4	1.07	
	2.49	702.08	13027	70848	4	0.93	
	2.23	783.52	13027	70848	4	0.84	
	1.94	903.16	13027	70848	4	0.73	
	5.44	321.92	18949	34781	4	3.44	B_1684GH100J4
	4.76	367.99	18949	39758	4	3.01	
	4.26	410.86	18949	44391	4	2.69	
	3.68	476.13	18949	51443	4	2.32	
	3.37	518.74	18949	56046	4	2.13	
	3.19	548.26	18949	59235	4	2.02	
	2.84	616.75	18949	66635	4	1.79	
	2.48	705.01	18949	76172	4	1.57	
	2.19	797.85	18949	86202	4	1.39	
	1.95	897.80	18949	97001	4	1.23	
	1.70	1031.24	18949	111419	4	1.07	
	1.48	1181.28	18949	119556	4	0.94	
	1.31	1338.81	18949	119556	4	0.83	
	1.13	1542.38	18949	119556	4	0.72	
5	300	5.83	2200	1050	3	2.78	B_583GH112L4
	239	7.31	2200	1316	3	2.46	
	215	8.12	2200	1462	3	2.22	
	187	9.34	2200	1682	3	1.94	
	174	10.05	2200	1810	3	1.8	
	150	11.7	2200	2107	3	1.54	
	136	12.86	2200	2316	3	2.33	
	122	14.29	2200	2573	3	2.1	
	107	16.43	2200	2959	3	1.83	
	99	17.67	2200	3182	3	1.7	
	85	20.59	2200	3708	3	1.46	
	78	22.32	2200	4019	3	1.34	
	72	24.29	2200	4374	3	1.24	
	66	26.55	2200	4781	3	1.13	
	326	5.36	2503	965	3	2.77	B_683GH112L4
	272	6.44	2503	1160	3	2.77	
	231	7.58	2503	1365	3	2.77	
	206	8.50	2503	1531	3	2.77	
	184	9.52	2503	1714	3	2.75	
	168	10.40	2503	1873	3	2.59	
	147	11.94	2503	2150	3	2.74	
	122	14.35	2503	2584	3	2.41	
	104	16.89	2503	3041	3	2.15	
	92	18.93	2503	3409	3	1.98	
	82	21.22	2503	3821	3	1.83	B_683GH112L4
	76	23.16	2503	4170	3	1.72	
	69	25.42	2503	4577	3	1.59	
	63	27.99	2503	5040	3	1.44	
	58	30.38	2503	5471	3	1.33	
	53	32.78	2503	5903	3	1.19	
	44	39.39	2503	7093	3	1.02	

(B) - See footnotes page on inside back cover

RHB integral gearmotors

1750 RPM – 60 Hz

Input power (Hp)	Speed (RPM)	Ratio	OHL (LBF) (B)	Output torque (in-lb)	Gear stage	Service factor (SF)	Catalog number
5 (cont.)	316	5.54	4505	998	3	2.77	B_883GH112L4
	262	6.69	4505	1205	3	2.77	
	218	8.03	4512	1446	3	2.77	
	186	9.41	4512	1694	3	2.77	
	150	11.64	4512	2096	3	2.77	
	125	14.04	4512	2528	3	2.77	
	104	16.85	4512	3034	3	2.77	
	89	19.75	4512	3556	3	2.77	
	74	23.54	4512	4239	3	2.75	
	69	25.53	4512	4597	3	2.65	
	61	28.50	4512	5132	3	2.51	
	57	30.87	4512	5559	3	2.42	
	51	34.40	4512	6194	3	2.36	
	42	41.50	4512	7473	3	1.95	
	35	49.80	4512	8968	3	1.63	
	30	58.37	4512	10511	3	1.39	
	25	69.57	4512	12528	3	1.17	
	23	75.45	4512	13586	3	1.07	
	228	7.68	5586	1383	3	2.77	B_1083GH112L4
	187	9.36	5586	1685	3	2.78	
	160	10.97	5586	1975	3	2.77	
	136	12.90	5586	2323	3	2.77	
	127	13.74	5586	2474	3	2.77	
	104	16.75	5586	3016	3	2.77	
	89	19.63	5586	3535	3	2.77	
	76	23.08	5586	4156	3	2.77	
	66	26.48	5586	4768	3	2.77	
	56	31.25	5586	5627	3	2.77	
	52	33.87	5586	6099	3	2.77	
	48	36.44	5586	6562	3	2.77	
	39	44.44	5586	8002	3	2.77	
	34	52.08	5586	9378	3	2.77	
	29	61.22	5586	11024	3	2.41	
	25	70.24	5586	12648	3	2.10	
	21	82.90	5586	14928	3	1.78	
	19	89.85	5586	16179	3	1.64	
	18	99.90	5586	17989	3	1.48	
	16	108.52	5586	19541	3	1.36	
	15	120.03	5586	21614	3	1.23	
	14	128.86	5586	23204	3	1.14	
	13	138.87	5586	25007	3	1.06	
	191	9.16	6907	1649	3	2.77	B_1283GH112L4
	161	10.88	6907	1959	3	2.77	
	139	12.56	6907	2262	3	2.77	
	104	16.76	6907	3018	3	2.77	
	88	19.92	6907	3587	3	2.77	
	76	22.99	6907	4140	3	2.77	
	65	27.02	6907	4866	3	2.77	
	57	30.61	6907	5512	3	2.77	
	49	35.92	6907	6468	3	2.77	
	45	39.19	6907	7057	3	2.77	
	33	53.36	6907	9609	3	2.77	
	28	63.41	6907	11418	3	2.77	
	24	73.18	6907	13178	3	2.77	
	20	85.98	6907	15483	3	2.69	
	18	97.44	6907	17546	3	2.37	
	15	114.34	6907	20589	3	2.02	
	14	124.73	6907	22460	3	1.85	
	13	136.06	6907	24501	3	1.70	B_1283GH112L4
	12	146.84	6907	26442	3	1.57	
	11	164.11	6907	29552	3	1.41	
	10	175.80	6907	31657	3	1.31	
	9	189.04	6907	34041	3	1.22	
	9	204.18	6907	36767	3	1.13	
	8	221.64	6907	39911	3	1.04	

(B) - See footnotes page on inside back cover

RHB integral gearmotors

1750 RPM – 60 Hz

Input power (Hp)	Speed (RPM)	Ratio	OHL (LBF) (B)	Output torque (in-lb)	Gear stage	Service factor (SF)	Catalog number
5 (cont.)	5.82	300.60	6907	41623	4	0.77	B_1284GH112L4
	5.04	346.89	6907	41623	4	0.67	
	4.64	377.09	6907	41623	4	0.61	
	88	19.84	11951	3573	3	2.77	B_1483GH112L4
	75	23.19	11951	4176	3	2.77	
	66	26.58	11951	4786	3	2.77	
	57	30.74	12561	5535	3	2.77	
	28	63.16	13027	11373	3	2.77	
	24	73.80	13027	13289	3	2.77	
	21	84.61	13027	15236	3	2.77	
	18	97.82	13027	17615	3	2.77	
	17	101.53	13027	18283	3	2.77	
	16	112.35	13027	20231	3	2.77	
	13	131.49	13027	23678	3	2.69	
	12	142.41	13027	25644	3	2.54	
	11	158.93	13027	28619	3	2.46	
	10	168.50	13027	30342	3	2.33	
	9	191.02	13027	34397	3	2.06	
	9	204.38	13027	36803	3	1.92	
	8	214.96	13027	38708	3	1.83	B_1483GH112L4
	8	231.95	13027	41768	3	1.70	
	7	251.55	13027	45297	3	1.56	
	6	274.42	13027	49415	3	1.43	
	6	306.08	13027	55116	3	1.28	
	5.53	316.44	13027	56982	4	1.24	B_1484GH112L4
	4.81	363.83	13027	65516	4	1.08	
	4.31	406.30	13027	70848	4	0.97	
	3.78	462.98	13027	70848	4	0.85	
	3.36	520.67	13027	70848	4	0.76	
	2.86	611.73	13027	70848	4	0.64	
	5.44	321.92	18949	57968	4	2.06	B_1684GH112L4
	4.76	367.99	18949	66264	4	1.80	
	4.26	410.86	18949	73984	4	1.62	
	3.68	476.13	18949	85738	4	1.39	
	3.37	518.74	18949	93411	4	1.28	
	3.19	548.26	18949	98726	4	1.21	
	2.84	616.75	18949	111058	4	1.08	
	2.48	705.01	18949	119556	4	0.94	
	2.19	797.85	18949	119556	4	0.83	
	1.95	897.80	18949	119556	4	0.74	
	1.70	1031.24	18949	119556	4	0.64	
7.5	316	5.54	4505	1496	3	3.59	B_883GH132M4
	262	6.69	4505	1807	3	3.38	
	218	8.03	4512	2169	3	3.16	
	186	9.41	4512	2542	3	2.96	
	150	11.64	4512	3144	3	3.59	
	125	14.04	4512	3792	3	3.32	
	104	16.85	4512	4551	3	2.92	
	89	19.75	4512	5335	3	2.61	
	74	23.54	4512	6358	3	2.30	
	69	25.53	4512	6896	3	2.12	
	61	28.50	4512	7698	3	1.90	
	57	30.87	4512	8338	3	1.75	
	51	34.40	4512	9292	3	1.57	
	42	41.50	4512	11209	3	1.30	
	35	49.80	4512	13451	3	1.09	
	228	7.68	5586	2074	3	4.02	B_1083GH132M4
	187	9.36	5586	2528	3	3.82	
	160	10.97	5586	2963	3	3.62	

(B) - See footnotes page on inside back cover

RHB integral gearmotors

1750 RPM – 60 Hz

Input power (Hp)	Speed (RPM)	Ratio	OHL (LBF) (B)	Output torque (in-lb)	Gear stage	Service factor (SF)	Catalog number
7.5 (cont.)	136	12.90	5586	3484	3	3.41	B_1083GH132M4
	127	13.74	5586	3711	3	4.02	
	104	16.75	5586	4524	3	3.82	
	89	19.63	5586	5302	3	3.62	
	76	23.08	5586	6234	3	3.41	
	66	26.48	5586	7152	3	3.21	
	56	31.25	5586	8441	3	2.97	
	52	33.87	5586	9149	3	2.76	
	48	36.44	5586	9843	3	2.56	
	39	44.44	5586	12004	3	2.21	
	34	52.08	5586	14067	3	1.89	
	29	61.22	5586	16536	3	1.61	
	25	70.24	5586	18972	3	1.40	
	21	82.90	5586	22392	3	1.19	
	19	89.85	5586	24269	3	1.09	
	246	7.10	6907	1918	3	4.37	B_1283GH132M4
	212	8.26	6907	2231	3	4.37	
	191	9.16	6907	2474	3	4.36	
	161	10.88	6907	2939	3	4.37	
	139	12.56	6907	3393	3	4.36	
	135	13.00	6907	3511	3	4.37	
	116	15.13	6907	4087	3	4.36	
	104	16.76	6907	4527	3	4.37	
	88	19.92	6907	5381	3	4.37	
	76	22.99	6907	6210	3	4.37	
	65	27.02	6907	7298	3	4.25	
	57	30.61	6907	8268	3	4.07	B_1283GH132M4
	49	35.92	6907	9702	3	3.84	
	45	39.19	6907	10585	3	3.71	
	42	41.38	6907	11177	3	3.72	
	36	48.14	6907	13003	3	3.20	
	33	53.36	6907	14413	3	2.89	
	28	63.41	6907	17127	3	2.43	
	24	73.18	6907	19766	3	2.10	
	20	85.98	6907	23224	3	1.79	
	18	97.44	6907	26319	3	1.58	
	15	114.34	6907	30884	3	1.35	
	14	124.73	6907	33690	3	1.23	
	13	136.06	6907	36751	3	1.13	
	12	146.84	6907	39663	3	1.05	
	235	7.44	10246	2010	3	4.37	B_1483GH132M4
	199	8.79	10246	2374	3	4.36	
	116	15.05	11162	4065	3	4.37	
	98	17.77	11951	4800	3	4.37	
	88	19.84	11951	5359	3	4.37	
	75	23.19	11951	6264	3	4.25	
	66	26.58	11951	7179	3	4.07	
	57	30.74	12561	8303	3	3.84	
	56	31.10	12561	8400	3	4.37	
	42	41.38	12561	11177	3	4.37	
	37	47.91	13027	12941	3	4.37	
	31	56.57	13027	15280	3	4.37	
	28	63.16	13027	17060	3	4.15	
	24	73.80	13027	19934	3	3.55	
	21	84.61	13027	22854	3	3.10	
	18	97.82	13027	26422	3	2.68	
	17	101.53	13027	27424	3	2.58	
	16	112.35	13027	30347	3	2.33	
	13	131.49	13027	35516	3	1.99	
	12	142.41	13027	38466	3	1.84	
	11	158.93	13027	42928	3	1.65	
	10	168.50	13027	45513	3	1.56	
	9	191.02	13027	51596	3	1.37	
	9	204.38	13027	55204	3	1.28	
	8	214.96	13027	58062	3	1.22	

(B) - See footnotes page on inside back cover

RHB integral gearmotors

1750 RPM – 60 Hz

Input power (Hp)	Speed (RPM)	Ratio	OHL (LBF) (B)	Output torque (in-lb)	Gear stage	Service factor (SF)	Catalog number
7.5 (cont.)	8	231.95	13027	62651	3	1.13	B_1483GH132M4
	7	251.55	13027	67945	3	1.04	
	172	10.17	15278	2747	3	4.37	B_1683GH132M4
	150	11.67	16566	3152	3	4.37	
	92	19.09	17607	5156	3	4.37	
	80	21.90	17607	5915	3	4.37	
	72	24.14	17607	6520	3	4.37	
	61	28.54	18949	7709	3	4.25	
	54	32.53	18949	8787	3	4.07	
	33	53.18	18949	14364	3	4.36	
	29	60.99	18949	16474	3	4.37	
	26	67.22	18949	18157	3	4.37	
	22	79.49	18949	21471	3	4.25	
	19	90.60	18949	24472	3	4.07	
	17	104.18	18949	28140	3	3.84	
	15	119.09	18949	32167	3	3.71	
	13	138.00	18949	37275	3	3.21	
	12	150.36	18949	40613	3	2.94	
	10	167.50	18949	45243	3	2.64	
	10	177.43	18949	47925	3	2.49	
	9	199.54	18949	53897	3	2.22	
	8	213.33	18949	57622	3	2.07	
	8	226.15	18949	61085	3	1.96	
	7	243.80	18949	65852	3	1.81	
	7	264.18	18949	71357	3	1.67	
	6	287.95	18949	77777	3	1.35	
	5.44	321.92	18949	86952	4	1.37	B_1684GH132M4
	4.76	367.99	18949	99396	4	1.20	
	4.26	410.86	18949	110976	4	1.08	
	3.68	476.13	18949	119556	4	0.93	
	3.37	518.74	18949	119556	4	0.85	
	3.19	548.26	18949	119556	4	0.81	
	2.84	616.75	18949	119556	4	0.72	
10	316	5.54	4505	1995	3	2.69	B_883GH132N4
	262	6.69	4505	2409	3	2.54	
	218	8.03	4512	2892	3	2.37	
	186	9.41	4512	3389	3	2.22	
	150	11.64	4512	4192	3	2.69	
	125	14.04	4512	5056	3	2.49	
	104	16.85	4512	6068	3	2.19	
	89	19.75	4512	7113	3	1.96	
	74	23.54	4512	8478	3	1.72	
	69	25.53	4512	9194	3	1.59	
	61	28.50	4512	10264	3	1.42	
	57	30.87	4512	11118	3	1.31	
	51	34.40	4512	12389	3	1.18	
	228	7.68	5586	2766	3	3.02	B_1083GH132N4
	187	9.36	5586	3371	3	2.86	
	160	10.97	5586	3951	3	2.72	
	136	12.90	5586	4646	3	2.55	
	127	13.74	5586	4948	3	3.02	
	104	16.75	5586	6032	3	2.86	
	89	19.63	5586	7070	3	2.72	
	76	23.08	5586	8312	3	2.55	
	66	26.48	5586	9537	3	2.41	
	56	31.25	5586	11254	3	2.23	
	52	33.87	5586	12198	3	2.07	
	48	36.44	5586	13124	3	1.92	
	39	44.44	5586	16005	3	1.66	
	34	52.08	5586	18756	3	1.42	
	29	61.22	5586	22048	3	1.20	
	25	70.24	5586	25296	3	1.05	

(B) - See footnotes page on inside back cover

RHB integral gearmotors

1750 RPM – 60 Hz

Input power (Hp)	Speed (RPM)	Ratio	OHL (LBF) (B)	Output torque (in-lb)	Gear stage	Service factor (SF)	Catalog number
10 (cont.)	246	7.10	6907	2557	3	3.27	B_1283GH132N4
	212	8.26	6907	2975	3	3.27	
	191	9.16	6907	3299	3	3.27	
	161	10.88	6907	3918	3	3.27	
	139	12.56	6907	4523	3	3.27	
	135	13.00	6907	4682	3	3.27	
	116	15.13	6907	5449	3	3.27	
	104	16.76	6907	6036	3	3.27	
	88	19.92	6907	7174	3	3.27	
	76	22.99	6907	8280	3	3.27	
	65	27.02	6907	9731	3	3.18	
	57	30.61	6907	11024	3	3.05	
	49	35.92	6907	12936	3	2.88	
	45	39.19	6907	14114	3	2.78	
	42	41.38	6907	14903	3	2.79	
	36	48.14	6907	17337	3	2.40	
	33	53.36	6907	19217	3	2.16	
	28	63.41	6907	22837	3	1.82	
	24	73.18	6907	26355	3	1.58	
	20	85.98	6907	30965	3	1.34	
	18	97.44	6907	35092	3	1.19	
	15	114.34	6907	41179	3	1.01	
	235	7.44	10246	2679	3	3.28	B_1483GH132N4
	199	8.79	10246	3166	3	3.27	
	116	15.05	11162	5420	3	3.27	
	98	17.77	11951	6400	3	3.27	
	88	19.84	11951	7145	3	3.27	B_1483GH132N4
	75	23.19	11951	8352	3	3.19	
	66	26.58	11951	9573	3	3.05	
	57	30.74	12561	11071	3	2.88	
	56	31.10	12561	11200	3	3.27	
	42	41.38	12561	14903	3	3.27	
	37	47.91	13027	17254	3	3.27	
	31	56.57	13027	20373	3	3.27	
	28	63.16	13027	22747	3	3.11	
	24	73.80	13027	26579	3	2.66	
	21	84.61	13027	30472	3	2.32	
	18	97.82	13027	35229	3	2.01	
	17	101.53	13027	36565	3	1.94	
	16	112.35	13027	40462	3	1.75	
	13	131.49	13027	47355	3	1.50	
	12	142.41	13027	51288	3	1.38	
	11	158.93	13027	57238	3	1.24	
	10	168.50	13027	60684	3	1.17	
	9	191.02	13027	68794	3	1.03	
	172	10.17	15278	3663	3	3.27	B_1683GH132N4
	150	11.67	16566	4203	3	3.27	
	92	19.09	17607	6875	3	3.27	
	80	21.90	17607	7887	3	3.27	
	72	24.14	17607	8694	3	3.27	
	61	28.54	18949	10278	3	3.19	
	54	32.53	18949	11715	3	3.05	
	33	53.18	18949	19152	3	3.27	
	29	60.99	18949	21965	3	3.27	
	26	67.22	18949	24209	3	3.27	
	22	79.49	18949	28628	3	3.19	
	19	90.60	18949	32629	3	3.05	
	17	104.18	18949	37520	3	2.88	
	15	119.09	18949	42889	3	2.78	
	13	138.00	18949	49700	3	2.40	
	12	150.36	18949	54151	3	2.21	
	10	167.50	18949	60324	3	1.98	
	10	177.43	18949	63900	3	1.87	
	9	199.54	18949	71863	3	1.66	
	8	213.33	18949	76829	3	1.56	

(B) - See footnotes page on inside back cover

RHB integral gearmotors

1750 RPM – 60 Hz

Input power (Hp)	Speed (RPM)	Ratio	OHL (LBF) (B)	Output torque (in-lb)	Gear stage	Service factor (SF)	Catalog number
10 (cont.)	8	226.15	18949	81446	3	1.47	B_1683GH132N4
	7	243.80	18949	87803	3	1.36	
	7	264.18	18949	95143	3	1.26	
	6	287.95	18949	103703	3	1.01	
	5.44	321.92	18949	86952	4	1.37	B_1684GH132M4
	4.76	367.99	18949	99396	4	1.20	
	4.26	410.86	18949	110976	4	1.08	
15	228	7.68	5586	4149	3	3.02	B_1083GH160P4
	187	9.36	5586	5056	3	2.51	
	160	10.97	5586	5926	3	2.17	
	136	12.90	5586	6969	3	1.87	
	127	13.74	5586	7423	3	2.85	
	104	16.75	5586	9049	3	2.48	
	90	19.63	5586	10604	3	2.22	
	76	23.08	5586	12468	3	1.97	
	66	26.48	5586	14305	3	1.73	
	56	31.25	5586	16882	3	1.49	
	52	33.87	5586	18297	3	1.38	
	48	36.44	5586	19685	3	1.28	
	39	44.44	5586	24007	3	1.11	
	246	7.10	6907	3836	3	3.03	B_1283GH160P4
	212	8.26	6907	4462	3	3.03	
	191	9.16	6907	4948	3	3.03	
	161	10.88	6907	5878	3	3.03	
	139	12.56	6907	6785	3	2.90	
	135	13.00	6907	7023	3	3.03	
	116	15.13	6907	8173	3	3.03	
	104	16.76	6907	9054	3	3.03	B_1283GH160P4
	88	19.92	6907	10761	3	3.03	
	76	22.99	6907	12420	3	2.90	
	65	27.02	6907	14597	3	2.69	
	57	30.61	6907	16536	3	2.50	
	49	35.92	6907	19404	3	2.14	
	45	39.19	6907	21171	3	1.96	
	42	41.38	6907	22354	3	1.86	
	36	48.14	6907	26006	3	1.60	
	33	53.36	6907	28826	3	1.44	
	28	63.41	6907	34255	3	1.21	
	24	73.18	6907	39533	3	1.05	
	362	4.83	9207	2609	3	3.03	B_1483GH160P4
	272	6.43	9207	3474	3	3.03	
	235	7.44	10246	4019	3	3.03	
	199	8.79	10246	4748	3	3.03	
	179	9.77	10246	5278	3	3.03	
	135	13.00	11162	7023	3	3.03	
	116	15.05	11162	8130	3	3.03	
	98	17.77	11951	9600	3	3.03	
	88	19.84	11951	10718	3	2.90	
	75	23.19	11951	12528	3	2.69	
	66	26.58	11951	14359	3	2.54	
	57	30.74	12561	16606	3	2.36	
	56	31.10	12561	16801	3	3.03	
	42	41.38	12561	22354	3	2.81	
	37	47.91	13027	25882	3	2.74	
	31	56.57	13027	30560	3	2.32	
	28	63.16	13027	34120	3	2.08	
	24	73.80	13027	39868	3	1.78	
	21	84.61	13027	45708	3	1.55	
	18	97.82	13027	52844	3	1.34	
	17	101.53	13027	54848	3	1.29	
	16	112.35	13027	60693	3	1.17	
	13	131.49	13027	71033	3	1.00	
	265	6.61	13774	3571	3	3.03	B_1683GH160P4
	203	8.64	15278	4667	3	3.03	
	172	10.17	15278	5494	3	3.03	
	150	11.67	16566	6304	3	3.03	

(B) - See footnotes page on inside back cover

RHB integral gearmotors

1750 RPM – 60 Hz

Input power (Hp)	Speed (RPM)	Ratio	OHL (LBF) (B)	Output torque (in-lb)	Gear stage	Service factor (SF)	Catalog number
15 (cont.)	141	12.41	16566	6704	3	3.03	B_1683GH160P4
	108	16.21	16566	8757	3	3.03	
	92	19.09	17607	10313	3	3.03	
	80	21.90	17607	11831	3	3.03	
	73	24.14	17607	13041	3	2.90	
	61	28.54	19423	15418	3	2.69	
	54	32.53	19423	17573	3	2.54	
	51	34.55	19423	18664	3	3.03	
	39	45.15	18949	24391	3	3.03	
	33	53.18	18949	28729	3	3.03	
	29	60.99	18949	32948	3	3.03	
	26	67.22	18949	36313	3	2.90	
	22	79.49	18949	42942	3	2.69	
	19	90.60	18949	48943	3	2.44	
	17	104.18	18949	56280	3	2.12	
	15	119.09	18949	64334	3	1.86	
	13	138.01	18949	74550	3	1.60	
	12	150.36	18949	81227	3	1.47	
	10	167.50	18949	90486	3	1.32	
	10	177.43	18949	95850	3	1.25	
	9	199.54	18949	107794	3	1.11	
	8	213.33	18949	115244	3	1.04	
20	228	7.68	5586	5532	3	2.27	B_1083GH160Q4
	187	9.36	5586	6742	3	1.89	
	160	10.97	5586	7902	3	1.63	
	136	12.90	5586	9292	3	1.40	
	127	13.74	5586	9897	3	2.13	B_1083GH160Q4
	104	16.75	5586	12065	3	1.86	
	90	19.63	5586	14139	3	1.66	
	76	23.08	5586	16624	3	1.48	
	66	26.48	5586	19073	3	1.30	
	56	31.25	5586	22509	3	1.11	
	52	33.87	5586	24396	3	1.03	
	246	7.10	6907	5114	3	2.27	B_1283GH160Q4
	212	8.26	6907	5950	3	2.27	
	191	9.16	6907	6598	3	2.27	
	167	10.88	6907	7837	3	2.27	
	139	12.56	6907	9047	3	2.18	
	135	13.00	6907	9364	3	2.27	
	116	15.13	6907	10898	3	2.27	
	104	16.76	6907	12072	3	2.27	
	88	19.92	6907	14348	3	2.27	
	76	22.99	6907	16559	3	2.18	
	65	27.02	6907	19462	3	2.02	
	57	30.61	6907	22048	3	1.88	
	49	35.92	6907	25873	3	1.61	
	45	39.19	6907	28228	3	1.47	
	42	41.38	6907	29805	3	1.40	
	36	48.14	6907	34675	3	1.20	
	33	53.36	6907	38434	3	1.08	
	362	4.83	9207	3479	3	2.27	B_1483GH160Q4
	272	6.43	9207	4631	3	2.27	
	235	7.44	10246	5359	3	2.27	
	199	8.79	10246	6331	3	2.27	
	179	9.77	10246	7037	3	2.27	
	135	13.00	11162	9364	3	2.27	
	116	15.05	11162	10840	3	2.27	
	98	17.77	11951	12799	3	2.27	
	88	19.84	11951	14290	3	2.18	
	75	23.19	11951	16703	3	2.02	
	66	26.58	11951	19145	3	1.90	
	57	30.74	12561	22142	3	1.77	
	56	31.10	12561	22401	3	2.27	
	42	41.38	12561	29805	3	2.10	
	37	47.91	13027	34509	3	2.05	
	31	56.57	13027	40747	3	1.74	

(B) - See footnotes page on inside back cover

RHB integral gearmotors

1750 RPM – 60 Hz

Input power (Hp)	Speed (RPM)	Ratio	OHL (LBF) (B)	Output torque (in-lb)	Gear stage	Service factor (SF)	Catalog number
20 (cont.)	28	63.16	13027	45493	3	1.56	B_1483GH160Q4
	24	73.80	13027	53157	3	1.33	
	21	84.61	13027	60943	3	1.16	
	18	97.82	13027	70458	3	1.00	
	265	6.61	13774	4761	3	2.27	B_1683GH160Q4
	203	8.64	15278	6223	3	2.27	
	172	10.17	15278	7325	3	2.27	
	150	11.67	16566	8406	3	2.27	
	141	12.41	16566	8939	3	2.27	
	108	16.21	16566	11676	3	2.27	
	92	19.09	17607	13750	3	2.27	
	80	21.90	17607	15774	3	2.27	
	73	24.14	17607	17388	3	2.18	
	61	28.54	19423	20557	3	2.02	
	54	32.53	19423	23431	3	1.90	
	51	34.55	19423	24886	3	2.27	
	39	45.15	18949	32521	3	2.27	
	33	53.18	18949	38305	3	2.27	
	29	60.99	18949	43930	3	2.27	
	26	67.22	18949	48418	3	2.18	
	22	79.49	18949	57256	3	2.02	
	19	90.60	18949	65258	3	1.83	
	17	104.18	18949	75039	3	1.59	
	15	119.09	18949	85779	3	1.39	
	13	138.01	18949	99399	3	1.20	
	12	150.36	18949	108302	3	1.10	
25	246	7.10	6907	6393	3	3.70	B_1283GH180R4
	212	8.26	6907	7437	3	3.42	
	191	9.16	6907	8247	3	3.13	
	161	10.88	6907	9796	3	2.69	
	139	12.56	6907	11308	3	2.37	
	135	13.00	6907	11705	3	3.01	
	116	15.13	6907	13622	3	2.71	
	104	16.76	6907	15090	3	2.52	
	88	19.92	6907	17935	3	2.23	
	76	22.92	6907	20699	3	1.96	
	65	27.02	6907	24328	3	1.69	
	57	30.61	6907	27560	3	1.50	
	49	35.92	6907	32341	3	1.29	
	45	39.19	6907	35285	3	1.18	
	42	41.38	6907	37257	3	1.12	
	362	4.83	9207	4349	3	3.70	B_1483GH180R4
	272	6.43	9207	5789	3	3.70	
	235	7.44	10246	6699	3	3.71	
	199	8.79	10246	7914	3	3.67	
	179	9.77	10246	8796	3	3.70	
	135	13.00	11162	11705	3	3.70	
	116	15.05	11162	13550	3	3.71	
	98	17.77	11951	15999	3	3.67	
	88	19.84	11951	17863	3	3.49	
	75	23.19	11951	20879	3	3.24	
	66	26.58	11951	23931	3	2.86	
	57	30.74	12561	27677	3	2.50	
	56	31.10	12561	28001	3	2.53	
	42	41.38	12561	37257	3	1.90	
	37	47.91	13027	43136	3	1.64	
	31	56.57	13027	50933	3	1.39	
	28	63.16	13027	56867	3	1.25	
	24	73.80	13027	66446	3	1.07	
	265	6.61	13774	5951	3	3.70	B_1683GH180R4
	203	8.64	15278	7779	3	3.70	
	172	10.17	15278	9157	3	3.71	
	150	11.67	16566	10507	3	3.67	
	141	12.41	16566	11173	3	3.70	
	108	16.21	16566	14595	3	3.70	
	92	19.09	17607	17188	3	3.70	
	80	21.90	17607	19718	3	3.67	

(B) - See footnotes page on inside back cover

RHB integral gearmotors

1750 RPM – 60 Hz

Input power (Hp)	Speed (RPM)	Ratio	OHL (LBF) (B)	Output torque (in-lb)	Gear stage	Service factor (SF)	Catalog number
25 (cont.)	73	24.14	17607	21735	3	3.49	B_1683GH180R4
	61	28.54	19423	25696	3	3.32	
	54	32.53	19423	29289	3	3.24	
	51	34.55	19423	31107	3	3.70	
	39	45.15	18949	40651	3	2.94	
	33	53.18	18949	47881	3	2.50	
	29	60.99	18949	54913	3	2.18	
	26	67.22	18949	60522	3	1.97	
	22	79.49	18949	71569	3	1.67	
	19	90.60	18949	81572	3	1.46	
	17	104.18	18949	93799	3	1.27	
	15	119.09	18949	107224	3	1.11	
30	246	7.10	6907	7671	3	3.09	B_1283GH180S4
	212	8.26	6907	8924	3	2.85	
	191	9.16	6907	9897	3	2.60	
	161	10.88	6907	11755	3	2.24	
	139	12.56	6907	13570	3	1.97	
	135	13.00	6907	14046	3	2.51	
	116	15.13	6907	16347	3	2.25	
	104	16.76	6907	18108	3	2.10	
	88	19.92	6907	21522	3	1.86	
	76	22.92	6907	24839	3	1.63	
	65	27.02	6907	29193	3	1.40	
	57	30.61	6907	33072	3	1.25	
	49	35.92	6907	38809	3	1.07	
	362	4.83	9207	5218	3	3.09	B_1483GH180S4
	272	6.43	9207	6947	3	3.09	
	235	7.44	10246	8038	3	3.09	
	199	8.79	10246	9497	3	3.06	
	179	9.77	10246	10556	3	3.09	
	135	13.00	11162	14046	3	3.09	
	116	15.05	11162	16260	3	3.09	
	98	17.77	11951	19199	3	3.06	
	88	19.84	11951	21436	3	2.91	
	75	23.19	11951	25055	3	2.70	
	66	26.58	11951	28718	3	2.38	
	57	30.74	12561	33212	3	2.08	
	56	31.10	12561	33601	3	2.11	
	42	41.38	12561	44708	3	1.58	
	37	47.91	13027	51763	3	1.37	
	31	56.57	13027	61120	3	1.16	
	28	63.16	13027	68240	3	1.04	
	265	6.61	13774	7142	3	3.09	B_1683GH180S4
	203	8.64	15278	9335	3	3.09	
	172	10.17	15278	10988	3	3.09	
	150	11.67	16566	12609	3	3.06	
	141	12.41	16566	13408	3	3.09	
	108	16.21	16566	17514	3	3.09	
	92	19.09	17607	20625	3	3.09	
	80	21.90	17607	23661	3	3.06	
	72	24.14	17607	26082	3	2.91	
	61	28.54	18949	30835	3	2.77	
	54	32.53	18949	35146	3	2.70	
	51	34.55	18949	37329	3	3.09	
	39	45.15	18949	48781	3	2.45	
	33	53.18	18949	57457	3	2.08	
	29	60.99	18949	65895	3	1.81	
	26	67.22	18949	72626	3	1.65	
	22	79.49	18949	85883	3	1.39	
	19	90.60	18949	97887	3	1.22	
	17	104.18	18949	112559	3	1.06	

(B) - See footnotes page on inside back cover

RHB integral gearmotors

1750 RPM – 60 Hz

Input power (Hp)	Speed (RPM)	Ratio	OHL (LBF) (B)	Output torque (in-lb)	Gear stage	Service factor (SF)	Catalog number
40	362	4.83	9207	6958	3	3.40	B_1483GH200T4
	272	6.43	9207	9263	3	3.16	
	235	7.44	10246	10718	3	2.91	
	199	8.79	10246	12663	3	2.64	
	179	9.77	10246	14074	3	3.40	
	135	13.00	11162	18727	3	3.16	
	116	15.05	11162	21681	3	2.91	
	98	17.77	11951	25599	3	2.59	
	88	19.84	11951	28581	3	2.34	
	75	23.19	11951	33407	3	2.03	
	66	26.58	11951	38290	3	1.79	
	57	30.74	12561	44283	3	1.56	
	56	31.10	12561	44802	3	1.58	
	42	41.38	12561	59611	3	1.19	
	37	47.91	13027	69018	3	1.03	
	265	6.61	13774	9522	3	2.92	B_1683GH200T4
	203	8.64	15278	12447	3	2.83	
	172	10.17	15278	14651	3	2.76	
	150	11.67	16566	16811	3	2.65	
	141	12.41	16566	17877	3	2.92	
	108	16.21	16566	23352	3	2.83	
	92	19.09	17607	27501	3	2.76	
	80	21.90	17607	31549	3	2.65	
	73	24.14	17607	34775	3	2.50	
	61	28.54	19423	41114	3	2.23	
	54	32.53	19423	46862	3	2.03	
	51	34.55	19423	49772	3	2.40	
	39	45.15	18949	65042	3	1.84	
	33	53.18	18949	76610	3	1.56	
	29	60.99	18949	87860	3	1.36	
	26	67.22	18949	96835	3	1.23	
	22	79.49	18949	114511	3	1.04	

(B) - See footnotes page on inside back cover

RHB Dimensions Outline

Solid Shaft

C-face

Foot mount

Triple reduction

RHB-108	Output shaft dimensions
RHB-109	Gearcase dimensions
RHB-110	Clamp collar (NEMA/IEC)
RHB-111	3 pc coupled (NEMA/IEC)

4 & 5 Stage

RHB-112	Output shaft dimensions
RHB-113	Gearcase dimensions
RHB-114	Clamp collar (NEMA/IEC)
RHB-115	3 pc coupled (NEMA/IEC)

Flange mount

Triple reduction

RHB-116	Output shaft dimensions
RHB-117	Gearcase dimensions
RHB-118	Clamp Collar (NEMA/IEC)
RHB-119	3 pc coupled (NEMA/IEC)

4 & 5 Stage

RHB-120	Output shaft dimensions
RHB-121	Gearcase dimensions
RHB-122	Clamp collar (NEMA/IEC)
RHB-123	3 pc coupled (NEMA/IEC)

Separate

Foot mount

Triple reduction

RHB-124	Output shaft dimensions
RHB-125	Gearcase dimensions
RHB-126	Input shaft dimensions

4 & 5 Stage

RHB-128	Output shaft dimensions
RHB-129	Gearcase dimensions
RHB-130	Input shaft dimensions

RHB reducer dimensions
(cont.)

Solid Shaft

Separate
Flange mount

Triple reduction

RHB-132	Output shaft dimensions
RHB-133	Gearcase dimensions
RHB-134	Input shaft dimensions

4 & 5 Stage

RHB-136	Output shaft dimensions
RHB-137	Gearcase dimensions
RHB-138	Input shaft dimensions

Integral
Foot mount

Triple reduction

RHB-140	Output shaft dimensions
RHB-141	Gearcase dimensions
RHB-142	Standard motor dimensions
RHB-143	Washdown motor dimensions

4 & 5 Stage

RHB-144	Output shaft dimensions
RHB-145	Gearcase dimensions
RHB-146	Standard motor dimensions
RHB-147	Washdown motor dimensions

Flange mount

Triple reduction

RHB-148	Output shaft dimensions
RHB-149	Gearcase dimensions
RHB-150	Standard motor dimensions
RHB-151	Washdown motor dimensions

4 & 5 Stage

RHB-152	Output shaft dimensions
RHB-153	Gearcase dimensions
RHB-154	Standard motor dimensions
RHB-155	Washdown motor dimensions

RHB reducer dimensions
(cont.)

Straight hollow bore

C-face
Foot mount

Triple reduction

RHB-156	Output shaft dimensions
RHB-157	Gearcase dimensions
RHB-158	Clamp collar (NEMA/IEC)
RHB-159	3 pc coupled (NEMA/IEC)

4 & 5 Stage

RHB-160	Output shaft dimensions
RHB-161	Gearcase dimensions
RHB-162	Clamp collar (NEMA/IEC)
RHB-163	3 pc coupled (NEMA/IEC)

Flange mount

Triple reduction

RHB-164	Output shaft dimensions
RHB-165	Gearcase dimensions
RHB-166	Clamp collar (NEMA/IEC)
RHB-167	3 pc coupled (NEMA/IEC)

4 & 5 Stage

RHB-168	Output shaft dimensions
RHB-169	Gearcase dimensions
RHB-170	Clamp collar (NEMA/IEC)
RHB-171	3 pc coupled (NEMA/IEC)

Separate
Foot mount

Triple reduction

RHB-172	Output shaft dimensions
RHB-173	Gearcase dimensions
RHB-174	Input shaft dimensions

4 & 5 Stage

RHB-176	Output shaft dimensions
RHB-177	Gearcase dimensions
RHB-178	Input shaft dimensions

RHB reducer dimensions
(cont.)

Solid Shaft

Separate
Flange mount

Triple reduction

RHB-180	Output shaft dimensions
RHB-181	Gearcase dimensions
RHB-182	Input shaft dimensions

4 & 5 Stage

RHB-184	Output shaft dimensions
RHB-185	Gearcase dimensions
RHB-186	Input shaft dimensions

Integral
Foot mount

Triple reduction

RHB-188	Output shaft dimensions
RHB-189	Gearcase dimensions
RHB-190	Standard motor dimensions
RHB-191	Washdown motor dimensions

4 & 5 Stage

RHB-192	Output shaft dimensions
RHB-193	Gearcase dimensions
RHB-194	Standard motor dimensions
RHB-195	Washdown motor dimensions

Flange mount

Triple reduction

RHB-196	Output shaft dimensions
RHB-197	Gearcase dimensions
RHB-198	Standard motor dimensions
RHB-199	Washdown motor dimensions

4 & 5 Stage

RHB-200	Output shaft dimensions
RHB-201	Gearcase dimensions
RHB-202	Standard motor dimensions
RHB-203	Washdown motor dimensions

Dimensions

Output shaft dimensions

BB_3C_
BB_3L_

C-face – foot mounted – solid shaft

Triple reduction

Metric output shaft

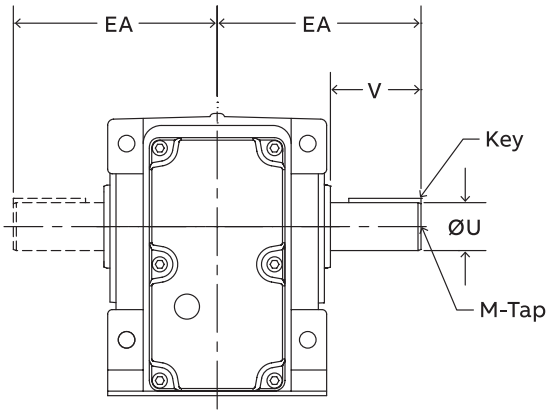

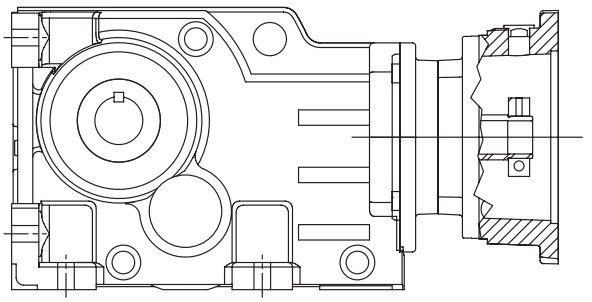

	Standard inch output shaft							Standard metric output shaft							
	Ø U	Tol.	UY	V	EA	Key	M-Tap	Ø U	Tol.	UY	V	VO	EA	Key	M-Tap
38	1.000	+0.0000 -0.0005	1.11	1.97	4.33	1/4 x 1/4 x 1-5/8	3/8-16 UNC X 0.87	25	+0.015 +0.002	28	50	5	110	8 x 7 x 40	M10 x 22
48	1.250	+0.0000 -0.0005	1.37	2.36	5.31	1/4 x 1/4 x 1-7/8	3/8-16 UNC X 0.87	30	+0.015 +0.002	33	60	4	135	8 x 7 x 50	M10 x 22
58	1.375	+0.0000 -0.0005	1.49	2.76	5.99	5/16 x 5/16 x 2-1/8	1/2-13 UNC x 1.12	35	+0.014 +0.002	38	70	7	152	10 x 8 x 56	M12 x 28
68	1.625	+0.0000 -0.0010	1.80	3.15	6.69	3/8 x 3/8 x 2-5/8	5/8-11 UNC X 1.42	40	+0.018 +0.002	43	80	5	170	12 x 8 x 70	M16 x 36
88	2.000	+0.0000 -0.0010	2.22	3.94	8.07	1/2 x 1/2 x 3-1/4	3/4-10 UNC X 1.65	50	+0.030 +0.011	54	100	10	205	14 x 9 x 80	M16 x 36
108	2.375	+0.0000 -0.0010	2.65	4.72	9.45	5/8 x 5/8 x 3-11/16	3/4-10 UNC X 1.65	60	+0.030 +0.011	64	120	5	240	18 x 11 x 100	M20 x 42
128	2.875	+0.0000 -0.0010	3.21	5.51	11.42	3/4 x 3/4 x 4	3/4-10 UNC X 1.65	70	+0.035 +0.013	75	140	8	290	20 x 12 x 125	M20 x 42
148	3.625	+0.0000 -0.0010	4.01	6.69	13.58	7/8 x 7/8 x 5-1/4	1-8 UNC X 1.97	90	+0.035 +0.013	95	170	15	345	25 x 14 x 140	M24 x 50
168	4.375	+0.0000 -0.0010	4.82	8.27	16.34	1 x 1 x 6-5/8	1-8 UNC X 1.97	110	+0.035 +0.013	116	210	15	415	28 x 16 x 180	M24 x 50

See page RHB-204 for optional solid shaft dimensions

Gearcase dimensions

BB_3C_
BB_3L_

C-face – foot mounted – solid shaft
Triple reduction

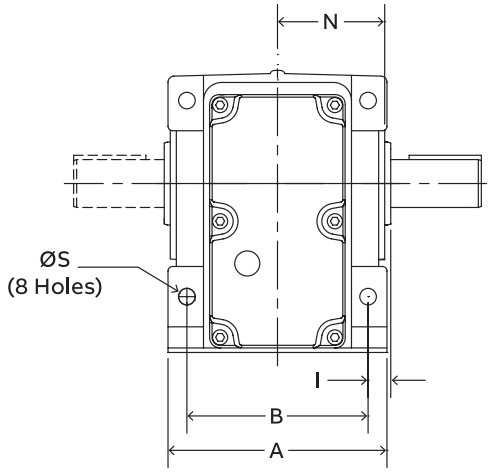

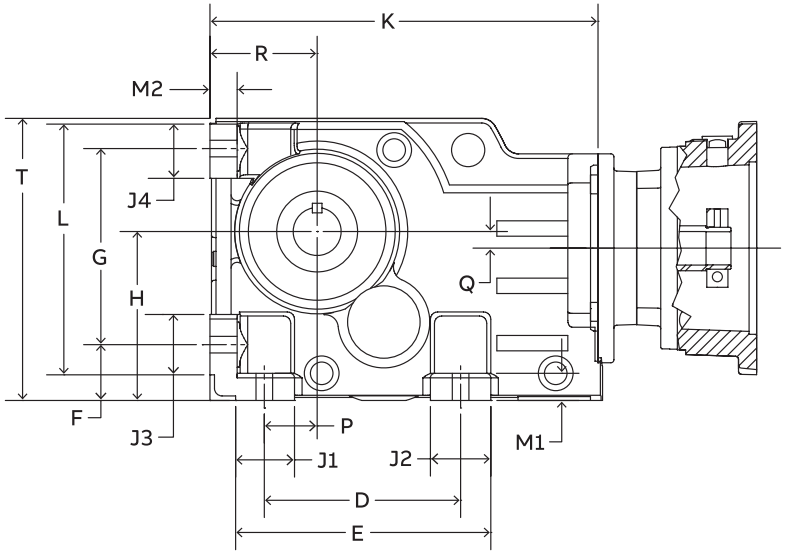

	Mounting dimensions								
	A	B	D	E	F	G	H	I	Ø S
38	4.72	3.94	4.33	5.55	1.26	4.53	3.94	0.39	0.43
48	5.71	4.72	5.12	6.65	1.45	5.12	4.41	0.59	0.43
58	6.30	5.12	5.12	6.78	1.77	5.91	5.20	0.72	0.53
68	6.69	5.51	4.72	6.69	1.77	6.30	5.51	0.79	0.53
88	7.87	6.50	5.91	8.07	2.17	7.87	7.09	0.89	0.71
108	9.06	7.09	7.09	10.04	2.76	9.17	8.35	1.18	0.87
128	11.42	9.45	9.45	12.60	2.95	11.61	10.43	1.18	1.02
148	13.39	10.63	11.02	15.20	3.74	14.17	12.40	1.58	1.30
168	15.75	12.99	13.78	18.11	4.33	16.54	14.76	1.58	1.54

	Outline dimensions												
	J1	J2	J3	J4	M1	M2	K	P	L	N	R	T	Q
38	1.38	1.26	1.30	1.22	0.63	0.63	8.94	1.10	5.79	2.28	2.48	6.58	0.37
48	1.54	1.58	1.58	1.42	0.71	0.71	10.12	1.38	6.54	2.80	2.80	7.36	0.43
58	1.68	1.68	1.96	1.79	0.81	0.73	11.3	1.18	7.72	3.15	3.15	8.58	0.39
68	1.97	1.97	1.97	1.89	0.87	0.87	12.21	1.18	8.19	3.39	3.54	9.09	0.26
88	2.17	2.17	2.17	2.56	0.98	0.98	14.72	1.58	10.31	3.94	4.41	11.61	0.79
108	2.76	3.15	2.76	2.91	1.18	1.18	18.11	2.17	12.09	4.53	5.20	13.58	0.51
128	3.15	3.15	3.15	3.54	1.38	1.38	20.91	2.95	15.09	5.71	6.30	16.65	0.79
148	3.54	4.17	3.54	3.50	1.58	1.58	24.49	3.74	17.67	6.65	7.87	19.80	1.46
168	4.33	4.33	4.33	4.33	1.77	1.77	28.47	4.53	20.87	7.84	8.86	23.62	1.97

Clamp collar – NEMA/IEC dimensions

BB_3CN_
BB_3CI_

C-face – foot mounted – solid shaft

Triple reduction

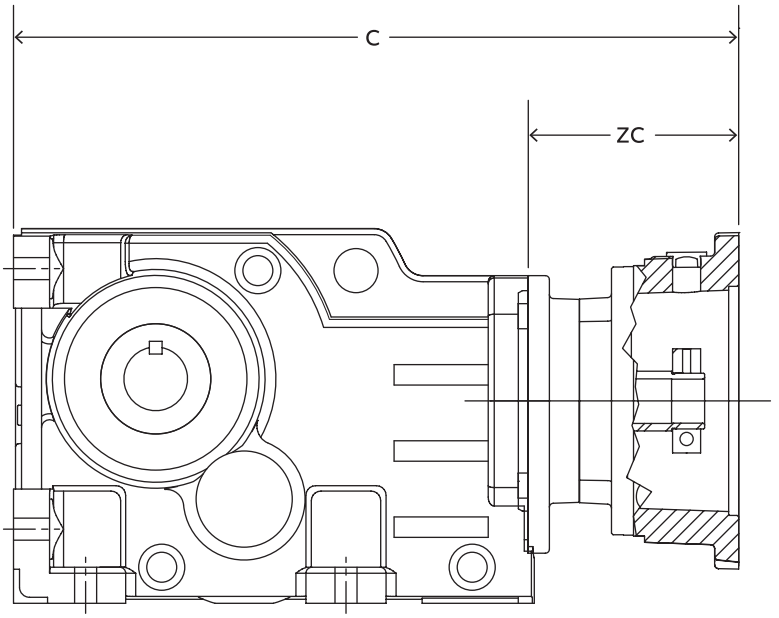

NEMA clamp collar motor dimensions

Reducer size	Reducer stage	56C		140TC		180TC		210TC		250TC		280TC		320TC		360TC	
		C	ZC	C	ZC	C	ZC	C	ZC	C	ZC	C	ZC	C	ZC	C	ZC
38	3	12.44	3.50	13.11	4.17	13.43	4.49	–	–	–	–	–	–	–	–	–	–
48	3	13.62	3.50	14.29	4.17	14.61	4.49	–	–	–	–	–	–	–	–	–	–
58	3	14.51	3.21	15.18	3.88	16.26	4.96	–	–	–	–	–	–	–	–	–	–
68	3	15.50	3.29	16.17	3.96	17.75	5.54	17.54	5.33	–	–	–	–	–	–	–	–
88	3	17.80	3.08	18.46	3.74	19.96	5.24	21.85	7.13	20.86	6.13	–	–	–	–	–	–
108	3	–	–	21.28	3.17	22.64	4.53	24.53	6.42	24.47	6.36	24.99	6.88	–	–	–	–
128	3	–	–	23.55	2.64	24.86	3.95	26.76	5.85	26.74	5.83	27.54	6.63	28.97	8.01	–	–
148	3	–	–	–	–	28.07	3.58	29.92	5.43	29.66	5.17	30.58	6.09	32.17	7.68	33.94	9.41
168	3	–	–	–	–	–	–	33.59	5.12	33.34	4.87	34.26	5.79	35.87	7.40	37.58	9.11

IEC clamp collar motor dimensions

Reducer size	Reducer stage	71D		80D		90D		100D		112D		132D		160D		180D		200D	
		C	ZC	C	ZC	C	ZC	C	ZC	C	ZC	C	ZC	C	ZC	C	ZC	C	ZC
38	3	11.70	2.76	12.64	3.70	12.64	3.70	12.94	4.00	–	–	–	–	–	–	–	–	–	–
48	3	12.88	2.76	13.82	3.70	13.82	3.70	14.12	4.00	–	–	–	–	–	–	–	–	–	–
58	3	13.80	2.50	14.75	3.45	14.75	3.45	15.04	3.74	15.37	4.07	–	–	–	–	–	–	–	–
68	3	14.75	2.54	15.69	3.48	15.69	3.48	15.99	3.78	16.32	4.11	–	–	–	–	–	–	–	–
88	3	17.03	2.31	17.97	3.25	17.97	3.25	18.27	3.55	18.52	3.80	20.14	5.42	–	–	–	–	–	–
108	3	–	–	20.77	2.66	20.77	2.66	20.96	2.85	21.18	3.07	22.80	4.69	24.50	6.39	–	–	–	–
128	3	–	–	–	–	23.11	2.20	23.29	2.38	23.53	2.62	25.10	4.19	26.84	5.93	27.37	6.46	27.76	6.85
148	3	–	–	–	–	–	–	26.50	2.01	26.69	2.20	28.27	3.78	29.77	5.28	30.42	5.93	30.81	6.32
168	3	–	–	–	–	–	–	–	–	–	–	31.93	3.46	33.45	4.98	34.10	5.63	34.49	6.02

Three-piece coupled – NEMA/IEC dimensions

BB_3LN_
BB_3LI_

C-face – foot mounted – solid shaft

Triple reduction

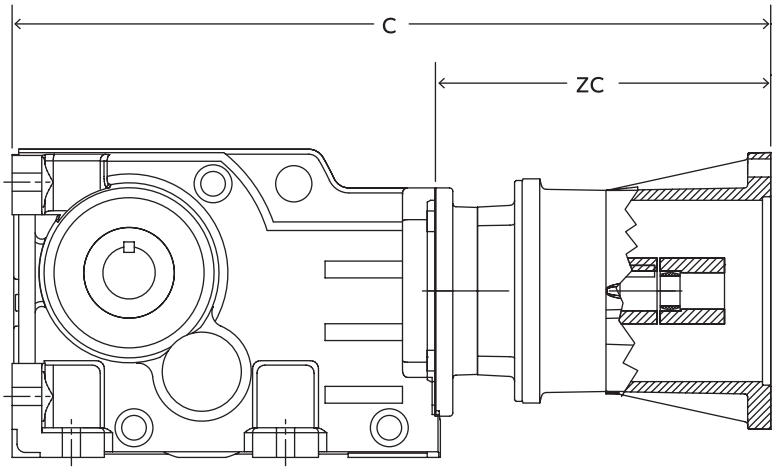

NEMA Three-piece coupled motor dimensions

Reducer size	Reducer stage	56C		140TC		180TC		210TC		250TC		280TC		320TC		360TC	
		C	ZC	C	ZC	C	ZC	C	ZC	C	ZC	C	ZC	C	ZC	C	ZC
38	3	15.53	6.59	16.95	8.01	–	–	–	–	–	–	–	–	–	–	–	–
48	3	16.71	6.59	18.13	8.01	–	–	–	–	–	–	–	–	–	–	–	–
58	3	17.64	6.34	19.06	7.76	19.85	8.55	–	–	–	–	–	–	–	–	–	–
68	3	18.59	6.38	20.01	7.80	21.28	9.07	–	–	–	–	–	–	–	–	–	–
88	3	20.87	6.15	22.28	7.56	23.48	8.76	25.63	10.91	–	–	–	–	–	–	–	–
108	3	–	–	25.08	6.97	26.14	8.03	28.29	10.18	30.24	12.13	–	–	–	–	–	–
128	3	–	–	27.42	6.52	28.58	7.68	30.59	9.69	32.58	11.67	35.28	14.37	–	–	–	–
148	3	–	–	–	–	31.79	7.30	33.76	9.27	35.51	11.02	38.33	13.84	40.83	16.34	–	–
168	3	–	–	–	–	–	–	37.43	8.96	39.20	10.73	42.01	13.54	44.51	16.04	45.56	17.09

IEC Three-piece coupled motor dimensions

Reducer size	Reducer stage	71D		80D		90D		100D		112D		132D		160D		180D		200D		225D		250D	
		C	ZC	C	ZC	C	ZC	C	ZC	C	ZC	C	ZC	C	ZC	C	ZC	C	ZC	C	ZC	C	ZC
38	3	–	–	16.87	7.93	16.87	7.93	17.76	8.82	–	–	–	–	–	–	–	–	–	–	–	–	–	–
48	3	–	–	18.05	7.93	18.05	7.93	18.94	8.82	–	–	–	–	–	–	–	–	–	–	–	–	–	–
58	3			18.98	7.68	18.98	7.68	19.87	8.57	19.82	8.52	–	–	–	–	–	–	–	–	–	–	–	–
68	3	–	–	19.93	7.72	19.93	7.72	20.81	8.60	20.77	8.56	–	–	–	–	–	–	–	–	–	–	–	–
88	3	–	–	22.20	7.48	22.20	7.48	23.09	8.37	22.97	8.25	25.39	10.67	–	–	–	–	–	–	–	–	–	–
108	3	–	–	25.00	6.89	25.00	6.89	25.79	7.68	25.63	7.52	28.05	9.94	30.67	12.56	–	–	–	–	–	–	–	–
128	3	–	–	–	–	27.34	6.43	28.11	7.20	27.98	7.07	30.36	9.45	33.01	12.10	35.00	35.04	35.04	14.13	–	–	–	–
148	3	–	–	–	–	–	–	31.32	6.83	31.14	6.65	33.53	9.04	35.95	11.46	38.05	13.56	38.09	13.60	41.38	16.89	–	–
168	3	–	–	–	–	–	–	–	–	–	–	37.19	8.72	39.63	11.16	41.74	13.27	41.78	13.31	45.06	16.59	45.24	16.77

Output shaft dimensions

C-face – foot mounted – solid shaft

Four- and five-stage reduction

BB_4C_
BB_4L_
BB_5C_
BB_5L_

Metric output shaft

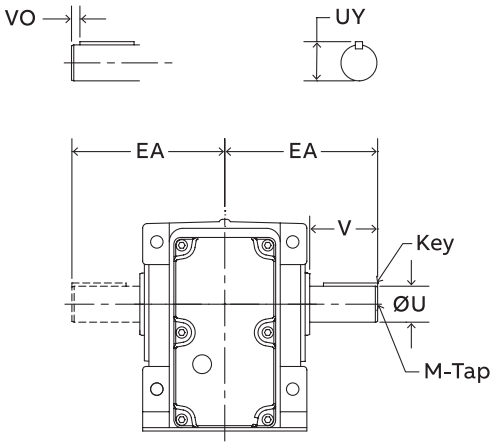

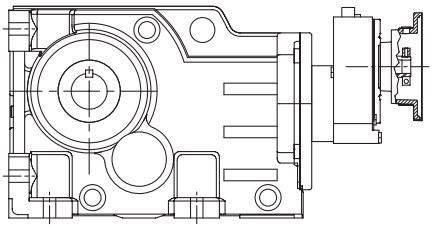

4 Stage reduction

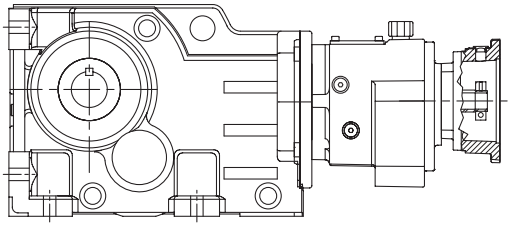

5 Stage reduction

	Standard inch output shaft							Standard metric output shaft							
	Ø U	Tol.	UY	V	EA	Key	M-Tap	Ø U	Tol.	UY	V	Vo	EA	Key	M-Tap
48	1.250	+0.0000 0.0005	1.37	2.36	5.31	1/4 x 1/4 x 1-7/8	3/8-16 UNC X 0.87	30	+0.015 +0.002	33	60	4	135	8 x 7 x 50	M10 x 22
68	1.625	+0.0000 -0.0010	1.80	3.15	6.69	3/8 x 3/8 x 2-5/8	5/8-11 UNC X 1.42	40	+0.018 +0.002	43	80	5	170	12 x 8 x 70	M16 x 36
88	2.000	+0.0000 -0.0010	2.22	3.94	8.07	1/2 x 1/2 x 3-1/4	3/4-10 UNC X 1.65	50	+0.030 +0.011	54	100	10	205	14 x 9 x 80	M16 x 36
108	2.375	+0.0000 -0.0010	2.65	4.72	9.45	5/8 x 5/8 x 3-11/16	3/4-10 UNC X 1.65	60	+0.030 +0.011	64	120	5	240	18 x 11 x 100	M20 x 42
128	2.875	+0.0000 -0.0010	3.21	5.51	11.42	3/4 x 3/4 x 4	3/4-10 UNC X 1.65	70	+0.035 +0.013	75	140	8	290	20 x 12 x 125	M20 x 42
148	3.625	+0.0000 -0.0010	4.01	6.69	13.58	7/8 x 7/8 x 5-1/4	1-8 UNC X 1.97	90	+0.035 +0.013	95	170	15	345	25 x 14 x 140	M24 x 50
168	4.375	+0.0000 -0.0010	4.62	8.27	16.34	1 x 1 x 6-5/8	1-8 UNC X 1.97	110	+0.035 +0.013	116	210	15	415	28x 16 x 180	M24 x 50

See page RHB-204 for optional solid shaft dimensions

Gearcase dimensions

C-face – foot mounted – solid shaft

Four- and five-stage reduction

BB_4C_
BB_4L_
BB_5C_
BB_5L_

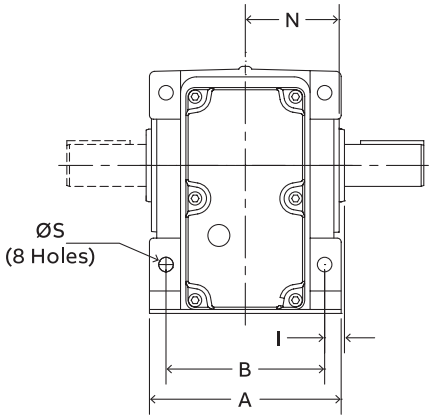

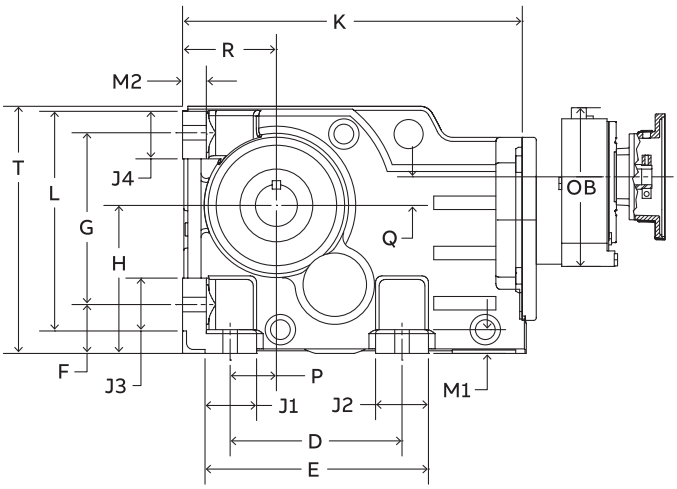

4 Stage reduction

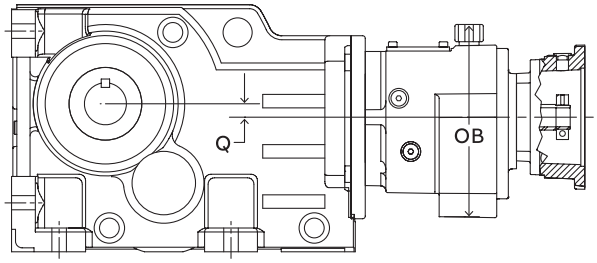

5 Stage reduction

	Mounting dimensions								
	A	B	D	E	F	G	H	I	Ø S
48	5.71	4.72	5.12	6.65	1.45	5.12	4.41	0.59	0.43
68	6.69	5.51	4.72	6.69	1.77	6.30	5.51	0.79	0.53
88	7.87	6.50	5.91	8.07	2.17	7.87	7.09	0.89	0.71
108	9.06	7.09	7.09	10.04	2.76	9.17	8.35	1.18	0.87
128	11.42	9.45	9.45	12.60	2.95	11.61	10.43	1.18	1.02
148	13.39	10.63	11.02	15.20	3.74	14.17	12.40	1.58	1.30
168	15.75	12.99	13.78	18.11	4.33	16.54	14.76	1.58	1.54

	Outline dimensions												4 stage		5 stage	
	J1	J2	J3	J4	M1	M2	K	P	L	N	R	T	Q	OB	Q	OB
48	1.54	1.58	1.58	1.42	0.71	0.71	10.12	1.38	6.54	2.80	2.80	7.36	1.50	7.83	0.43	6.26
68	1.97	1.97	1.97	1.89	0.87	0.87	12.21	1.18	8.19	3.39	3.54	9.09	1.67	7.83	0.26	6.29
88	2.17	2.17	2.17	2.56	0.98	0.98	14.72	1.58	10.31	3.94	4.41	11.61	1.14	7.83	0.79	6.29
108	2.76	3.15	2.76	2.91	1.18	1.18	18.11	2.17	12.09	4.53	5.20	13.58	2.03	9.84	0.51	8.86
128	3.15	3.15	3.15	3.54	1.38	1.38	20.91	2.95	15.09	5.71	6.30	16.65	1.77	9.84	0.79	8.86
148	3.54	4.17	3.54	3.50	1.58	1.58	24.49	3.74	17.67	6.65	7.87	19.80	1.61	11.57	1.46	8.86
168	4.33	4.33	4.33	4.33	1.77	1.77	28.47	4.53	20.87	7.84	8.86	23.62	1.10	11.57	1.97	10.68

Clamp collar – NEMA/IEC dimensions

BB_3CN_
BB_3CI_

C-face – foot mounted – solid shaft

Triple reduction

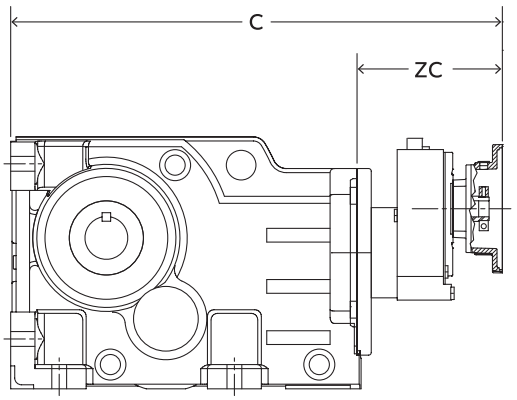

4 Stage reduction

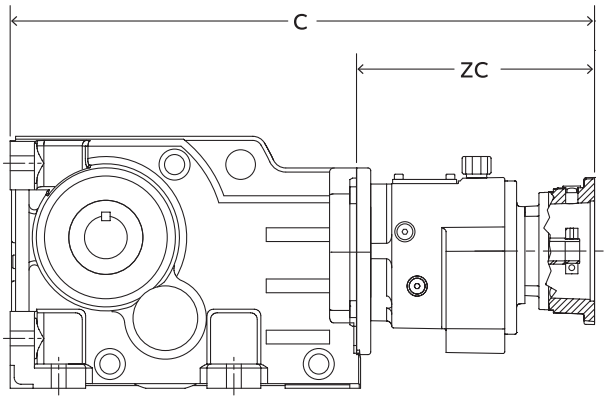

5 Stage reduction

NEMA clamp collar motor dimensions

Reducer size	Reducer stage	56C		140TC		180TC		210TC	
		C	ZC	C	ZC	C	ZC	C	ZC
48	4	18.57	8.45	19.27	9.15	19.57	9.45	–	–
	5	19.72	9.60	20.39	10.27	20.72	10.60	–	–
68	4	20.27	8.06	20.97	8.76	21.27	9.06	–	–
	5	21.42	9.21	22.09	9.88	22.42	10.21	–	–
88	4	22.72	8.00	23.42	8.70	23.72	9.00	–	–
	5	23.87	9.15	24.54	9.82	24.87	10.15	–	–
108	4	25.93	7.82	26.53	8.42	28.13	10.02	–	–
	5	28.27	10.16	28.94	10.83	30.51	12.40	–	–
128	4	29.05	8.14	29.65	8.74	31.25	10.34	–	–
	5	30.92	10.01	31.59	10.68	33.16	12.25	–	–
148	4	33.05	8.56	33.75	9.26	35.25	10.76	37.15	12.66
	5	34.29	9.80	34.96	10.47	36.53	12.04	–	–
168	4	36.88	8.41	37.58	9.11	39.08	10.61	40.98	12.51
	5	40.10	11.63	40.77	12.30	42.27	13.80	44.19	15.72

IEC Three-piece coupled motor dimensions

Reducer size	Reducer stage	71D		80D		90D		100D		112D		132D	
		C	ZC	C	ZC	C	ZC	C	ZC	C	ZC	C	ZC
48	4	17.87	7.75	18.77	8.65	18.77	8.65	19.07	8.95	–	–	–	–
	5	19.01	8.89	19.95	9.83	19.95	9.83	20.25	10.13	–	–	–	–
68	4	19.57	7.36	20.47	8.26	20.47	8.26	20.77	8.56	–	–	–	–
	5	20.71	8.50	21.65	9.44	21.65	9.44	21.95	9.74	–	–	–	–
88	4	22.02	7.30	22.92	8.20	22.92	8.20	23.22	8.50	–	–	–	–
	5	23.16	8.44	24.10	9.38	24.10	9.38	24.40	9.68	–	–	–	–
108	4	25.23	7.12	26.13	8.02	26.13	8.02	26.43	8.32	26.73	8.62	–	–
	5	27.56	9.45	28.51	10.40	28.51	10.40	28.80	10.69	29.14	11.03	–	–
128	4	28.35	7.44	29.25	8.34	29.25	8.34	29.55	8.64	29.85	8.94	–	–
	5	30.21	9.30	31.16	10.25	31.16	10.25	31.45	10.54	31.79	10.88	–	–
148	4	32.35	7.86	33.35	8.86	33.35	8.86	33.65	9.16	33.85	9.36	35.45	10.96
	5	33.58	9.09	34.53	10.04	34.53	10.04	34.82	10.33	35.16	10.67	–	–
168	4	36.18	7.71	37.18	8.71	37.18	8.71	37.48	9.01	37.68	9.21	39.28	10.81
	5	39.39	10.92	40.34	11.87	40.34	11.87	40.63	12.16	40.89	12.42	42.50	14.03

Three-piece coupled – NEMA/IEC dimensions

BB_3LN_
BB_3LI_

C-face – foot mounted – solid shaft

Triple reduction

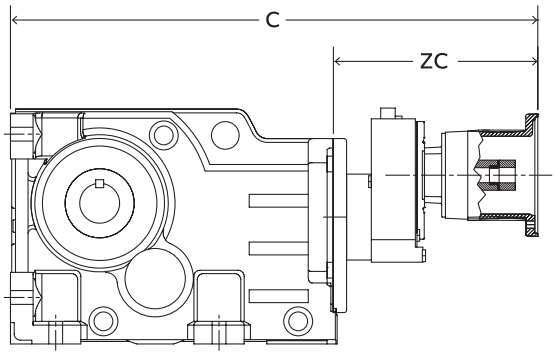

4 Stage reduction

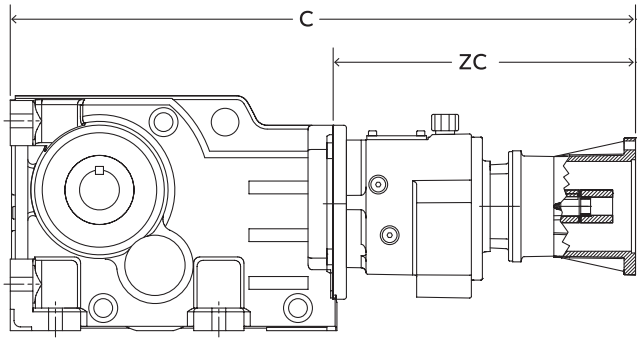

5 Stage reduction

NEMA Three-piece coupled motor dimensions

Reducer size	Reducer stage	56C		140TC		180TC		210TC	
		C	ZC	C	ZC	C	ZC	C	ZC
48	4	21.67	11.55	23.07	12.95	–	–	–	–
	5	22.85	12.73	24.26	14.14	–	–	–	–
68	4	23.37	11.16	24.77	12.56	–	–	–	–
	5	24.55	12.34	25.96	13.75	–	–	–	–
88	4	25.82	11.10	27.22	12.50	–	–	–	–
	5	27.00	12.28	28.41	13.69	–	–	–	–
108	4	29.03	10.92	30.43	12.32	31.73	13.62	–	–
	5	31.40	13.29	32.82	14.71	34.10	15.99	–	–
128	4	32.15	11.24	33.55	12.64	34.85	13.94	–	–
	5	34.05	13.14	35.47	14.56	36.75	15.84	–	–
148	4	36.25	11.76	37.65	13.16	38.85	14.36	40.75	16.26
	5	37.42	12.93	38.84	14.35	40.12	15.63	–	–
168	4	40.08	11.61	41.48	13.01	42.68	14.21	44.58	16.11
	5	43.23	14.76	44.65	16.18	45.85	17.38	48.00	19.53

IEC Three-piece coupled motor dimensions

Reducer size	Reducer stage	71D		80D		90D		100D		112D		132D	
		C	ZC	C	ZC	C	ZC	C	ZC	C	ZC	C	ZC
48	4	–	–	23.07	12.95	23.07	12.95	23.87	13.75	–	–	–	–
	5	–	–	24.18	14.06	24.18	14.06	25.07	14.95	–	–	–	–
68	4	–	–	24.77	12.56	24.77	12.56	25.57	13.36	–	–	–	–
	5	–	–	25.88	13.67	25.88	13.67	26.77	14.56	–	–	–	–
88	4	–	–	27.22	12.50	27.22	12.50	28.02	13.30	–	–	–	–
	5	–	–	28.33	13.61	28.33	13.61	29.22	14.50	–	–	–	–
108	4	–	–	30.33	12.22	30.33	12.22	31.23	13.12	31.23	13.12	–	–
	5	–	–	32.74	14.63	32.74	14.63	33.62	15.51	33.58	15.47	–	–
128	4	–	–	33.45	12.54	33.45	12.54	34.35	13.44	34.35	13.44	–	–
	5	–	–	35.39	14.48	35.39	14.48	36.27	15.36	36.23	15.32	–	–
148	4	–	–	–	–	37.55	13.06	38.45	13.96	38.35	13.86	40.75	16.26
	5	–	–	38.76	14.27	38.76	14.27	39.64	15.15	39.60	15.11	–	–
168	4	–	–	–	–	41.38	12.91	42.28	13.81	42.18	13.71	44.58	16.11
	5	–	–	44.57	16.10	44.57	16.10	45.46	16.99	45.34	16.87	47.76	19.29

Output shaft dimensions

C-face – flange mounted – solid shaft

Triple reduction

BF_3C_
BF_3L_

Metric output shaft

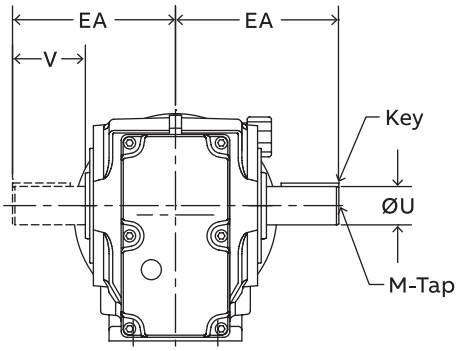

B14 Output flange

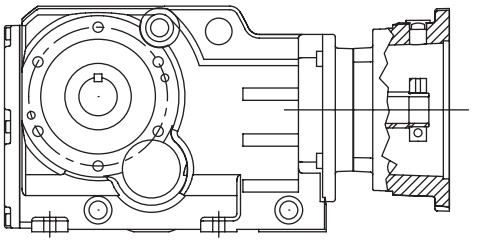

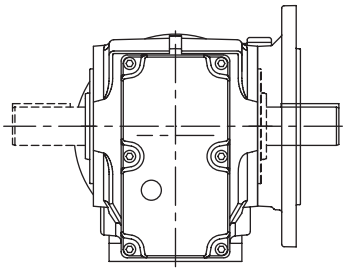

B5 Output flange

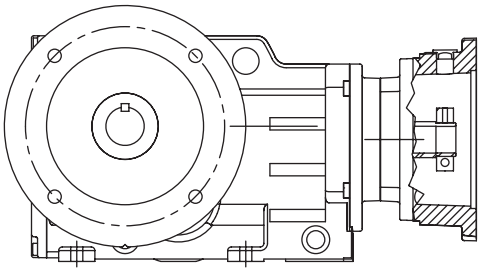

	Standard inch output shaft							Standard metric output shaft							
	Ø U	Tol.	UY	V	EA	Key	M-Tap	Ø U	Tol.	UY	V	VO	EA	Key	M-Tap
38	1.000	+0.0000 -0.0005	1.11	1.97	4.33	1/4 x 1/4 x 1-5/8	3/8-16 UNC X 0.87	25	+0.015 +0.002	28	50	5	110	8 x 7 x 40	M10 x 22
48	1.250	+0.0000 -0.0005	1.37	2.36	5.31	1/4 x 1/4 x 1-7/8	3/8-16 UNC X 0.87	30	+0.015 +0.002	33	60	4	135	8 x 7 x 50	M10 x 22
58	1.375	+0.0000 -0.0005	1.49	2.76	5.99	5/16 x 5/16 x 2-1/8	1/2-13 UNC x 1.12	35	+0.014 +0.002	38	70	7	152	10 x 8 x 56	M12 x 28
68	1.625	+0.0000 -0.0010	1.80	3.15	6.69	3/8 x 3/8 x 2-5/8	5/8-11 UNC X 1.42	40	+0.018 +0.002	43	80	5	170	12 x 8 x 70	M16 x 36
88	2.000	+0.0000 -0.0010	2.22	3.94	8.07	1/2 x 1/2 x 3-1/4	3/4-10 UNC X 1.65	50	+0.030 +0.011	54	100	10	205	14 x 9 x 80	M16 x 36
108	2.375	+0.0000 -0.0010	2.65	4.72	9.45	5/8 x 5/8 x 3-11/16	3/4-10 UNC X 1.65	60	+0.030 +0.011	64	120	5	240	18 x 11 x 100	M20 x 42
128	2.875	+0.0000 -0.0010	3.21	5.51	11.42	3/4 x 3/4 x 4	3/4-10 UNC X 1.65	70	+0.035 +0.013	75	140	8	290	20 x 12 x 125	M20 x 42
148	3.625	+0.0000 -0.0010	4.01	6.69	13.58	7/8 x 7/8 x 5-1/4	1-8 UNC X 1.97	90	+0.035 +0.013	95	170	15	345	25 x 14 x 140	M24 x 50
168	4.375	+0.0000 -0.0010	4.82	8.27	16.34	1 x 1 x 6-5/8	1-8 UNC X 1.97	116	+0.035 +0.013	106	210	15	415	28 x 16 x 180	M24 x 50

See page RHB-204 for optional solid shaft dimensions

Gearcase dimensions

C-face – flange mounted – solid shaft

Triple reduction

BF_3C_
BF_3L_

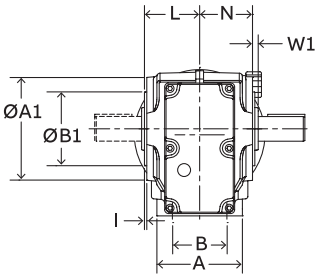

B14 Output flange

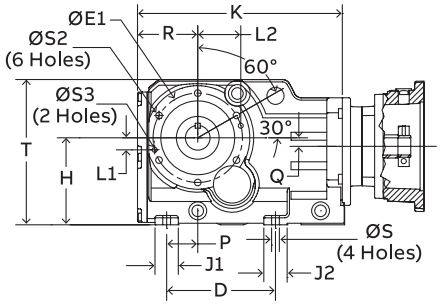

B14 Output flange
Sizes 38-128

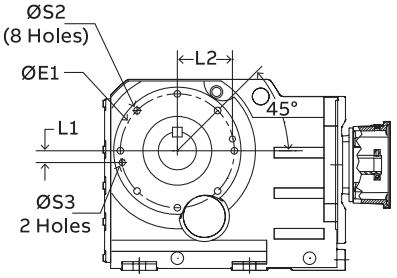

B14 Output flange
Sizes 148-168

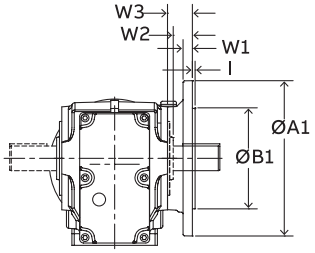

B5 Output flange

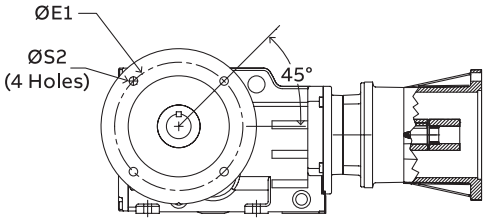

B5 Output flange
Sizes 38-108

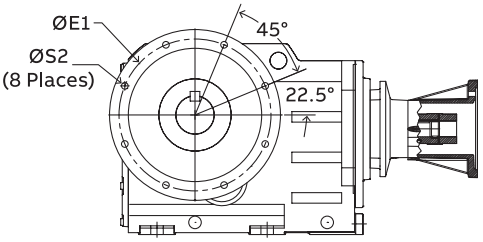

B5 Output flange
Sizes 128-168

	Mounting dimensions				Outline dimensions									
	B	D	H	Ø S	A	K	L	N	P	Q	R	T	J1	J2
38	2.36	4.61	3.94	M10 x 0.67	3.94	9.21	2.36	2.24	1.38	0.37	2.76	6.58	1.26	1.26
48	2.76	5.51	4.41	M10 x 0.66	4.33	10.37	2.80	2.68	1.58	0.43	3.05	7.36	1.18	1.18
58	3.46	5.98	5.20	M12 x 0.93	5.20	11.48	3.15	2.99	1.85	0.39	3.33	8.63	2.06	2.08
68	3.46	5.98	5.51	M12 x 0.93	5.51	12.15	3.39	3.25	1.65	0.26	3.48	9.09	1.97	1.97
88	4.53	6.69	7.09	M16 x 1.10	6.69	14.64	3.80	3.94	1.89	0.79	4.33	11.61	2.17	2.17
108	6.57	8.86	8.35	M16 x 1.10	8.27	18.24	4.53	4.37	2.56	0.51	5.33	13.58	2.76	2.76
128	8.39	9.76	10.43	M20 x 1.33	10.04	20.77	5.71	5.55	3.27	0.79	6.16	16.65	3.15	3.15
148	8.27	11.42	12.40	M24 x 1.61	11.26	24.31	6.65	6.46	3.94	1.46	7.71	19.80	3.54	3.54
168	9.45	13.78	14.76	M30 x 1.57	12.76	28.29	7.84	7.64	4.53	1.97	8.68	23.62	4.33	4.33

	B14 mounting dimensions									B5 mounting dimensions							
	Ø A1	Ø B1	Ø E1	Ø S2	I	W1	Ø S3	L1	L2	Ø A1	Ø B1	Ø E1	Ø S2	I	W1	W2	W3
38	4.72	3.1497	3.94	M8 X 0.55	0.12	0.24	–	–	–	6.30	4.3308	5.12	0.35	0.14	0.39	0.95	1.18
48	5.20	3.7402	4.53	M10 X 0.66	0.12	0.29	–	–	–	7.87	5.1182	6.50	0.43	0.14	0.47	0.97	1.26
58	5.91	4.3308	5.12	M12 X 0.82	0.16	0.28	–	–	–	9.84	7.0867	8.47	0.53	0.16	0.59	0.90	1.20
68	5.91	4.3308	5.12	M12 X 0.82	0.14	0.30	–	–	–	9.84	7.0867	8.47	0.53	0.16	0.59	0.90	1.20
88	7.48	5.1182	6.50	M12 X 0.82	0.14	0.34	–	–	–	11.81	9.0552	10.43	0.53	0.16	0.63	1.46	1.79
108	9.65	7.0867	8.47	M16 X 1.10	0.16	0.35	0.47	1.10	4.06	13.78	9.8419	11.81	0.69	0.20	0.71	1.42	1.77
128	11.61	9.0552	10.43	M16 X 1.10	0.16	0.35	0.47	1.69	4.92	17.71	13.7788	15.75	0.69	0.20	0.87	1.63	1.99
148	13.19	9.8419	11.81	M20 X 1.33	0.20	0.43	0.63	1.22	5.71	17.71	13.7788	15.75	0.69	0.20	0.87	1.61	2.05
168	15.75	11.8104	13.78	M20 X 1.33	0.20	0.43	0.63	1.46	3.73	21.65	17.7157	19.69	0.69	0.20	0.98	2.01	2.44

Clamp collar – NEMA/IECt dimensions

BF_3CN_
BF_3CI_

C-face – flange mounted – solid shaft

Triple reduction

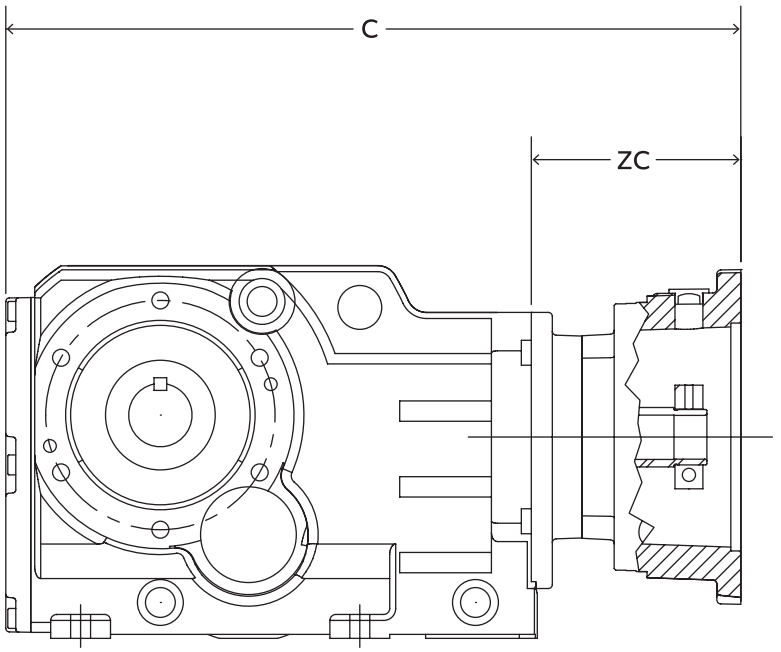

NEMA clamp collar motor dimensions

Reducer size	Reducer stage	56C		140TC		180TC		210TC		250TC		280TC		320TC		360TC	
		C	ZC	C	ZC	C	ZC	C	ZC	C	ZC	C	ZC	C	ZC	C	ZC
38	3	12.71	3.50	13.38	4.17	13.70	4.49	–	–	–	–	–	–	–	–	–	–
48	3	13.87	3.50	14.54	4.17	14.86	4.49	–	–	–	–	–	–	–	–	–	–
58	3	14.69	3.21	15.36	3.88	16.44	4.96	–	–	–	–	–	–	–	–	–	–
68	3	15.44	3.29	16.11	3.96	17.69	5.54	17.38	5.33	–	–	–	–	–	–	–	–
88	3	17.72	3.08	18.38	3.74	19.88	5.24	21.77	7.13	20.70	6.13	–	–	–	–	–	–
108	3	–	–	21.41	3.17	22.77	4.53	24.66	6.42	24.60	6.36	25.04	6.88	–	–	–	–
128	3	–	–	23.41	2.64	24.72	3.95	26.62	5.85	26.60	5.83	27.40	6.63	28.64	8.01	–	–
148	3	–	–	–	–	27.89	3.58	29.74	5.43	29.48	5.17	30.40	6.09	31.99	7.68	33.25	9.41
168	3	–	–	–	–	–	–	33.41	5.12	33.16	4.87	34.08	5.79	35.69	7.40	37.40	9.11

IEC clamp collar motor dimensions

Reducer size	Reducer stage	71D		80D		90D		100D		112D		132D		160D		180D		200D	
		C	ZC	C	ZC	C	ZC	C	ZC	C	ZC	C	ZC	C	ZC	C	ZC	C	ZC
38	3	11.97	2.76	12.91	3.70	12.91	3.70	13.21	4.00	–	–	–	–	–	–	–	–	–	–
48	3	13.13	2.76	14.07	3.70	14.07	3.70	14.37	4.00	–	–	–	–	–	–	–	–	–	–
58	3	13.98	2.50	14.93	3.45	14.93	3.45	15.22	3.74	15.55	4.07	–	–	–	–	–	–	–	–
68	3	14.69	2.54	15.63	3.48	15.63	3.48	15.93	3.78	16.26	4.11	–	–	–	–	–	–	–	–
88	3	16.95	2.31	17.89	3.25	17.89	3.25	18.19	3.55	18.44	3.80	20.06	5.42	–	–	–	–	–	–
108	3	–	–	20.90	2.66	20.90	2.66	21.09	2.85	21.31	3.07	22.93	4.69	24.63	6.39	–	–	–	–
128	3	–	–	–	–	22.97	2.20	23.15	2.38	23.39	2.62	24.96	4.19	26.70	5.93	27.23	6.46	27.62	6.85
148	3	–	–	–	–	–	–	26.32	2.01	26.51	2.20	28.09	3.78	29.59	5.28	30.24	5.93	30.63	6.32
168	3	–	–	–	–	–	–	–	–	–	–	31.75	3.46	33.27	4.98	33.92	5.63	34.31	6.02

Three-piece coupled – NEMA/IEC dimensions

BF_3LN_
BF_3LI_

C-face – flange mounted – solid shaft

Triple reduction

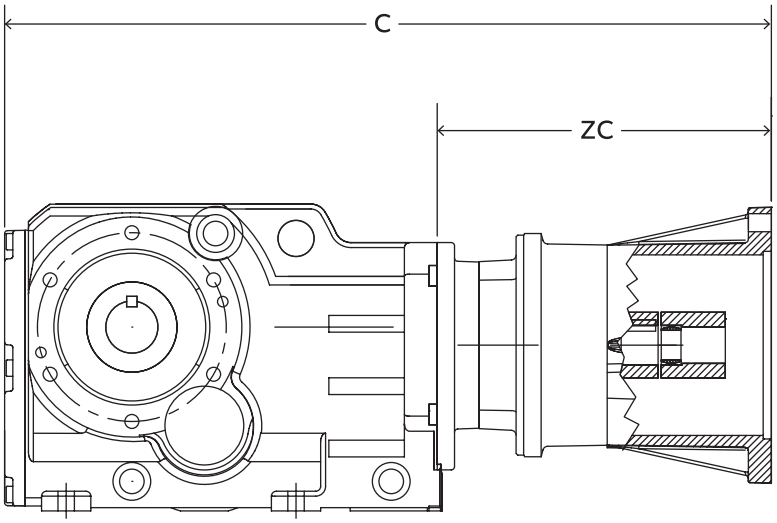

NEMA Three-piece coupled motor dimensions

Reducer size	Reducer stage	56C		140TC		180TC		210TC		250TC		280TC		320TC		360TC	
		C	ZC	C	ZC	C	ZC	C	ZC	C	ZC	C	ZC	C	ZC	C	ZC
38	3	15.80	6.59	17.22	8.01	–	–	–	–	–	–	–	–	–	–	–	–
48	3	16.97	6.59	18.39	8.01	–	–	–	–	–	–	–	–	–	–	–	–
58	3	17.82	6.34	19.24	7.76	20.03	8.55	–	–	–	–	–	–	–	–	–	–
68	3	18.53	6.38	19.95	7.80	21.22	9.07	–	–	–	–	–	–	–	–	–	–
88	3	20.79	6.15	22.20	7.56	23.40	8.76	25.55	10.91	–	–	–	–	–	–	–	–
108	3	–	–	25.21	6.97	26.27	8.03	28.42	10.18	30.37	12.13	–	–	–	–	–	–
128	3	–	–	27.29	6.52	28.44	7.68	30.45	9.69	32.44	11.67	35.14	14.37	–	–	–	–
148	3	–	–	–	–	31.61	7.30	33.58	9.27	35.33	11.02	38.15	13.84	40.65	16.34	–	–
168	3	–	–	–	–	–	–	37.25	8.96	39.02	10.73	41.83	13.54	44.33	16.04	45.38	17.09

IEC Three-piece coupled motor dimensions

Reducer size	Reducer stage	71D		80D		90D		100D		112D		132D		160D		180D		200D		225D		250D	
		C	ZC	C	ZC	C	ZC	C	ZC	C	ZC	C	ZC	C	ZC	C	ZC	C	ZC	C	ZC	C	ZC
38	3	–	–	17.14	7.93	17.14	7.93	18.03	8.82	–	–	–	–	–	–	–	–	–	–	–	–	–	–
48	3	–	–	18.30	7.93	18.30	7.93	19.19	8.82	–	–	–	–	–	–	–	–	–	–	–	–	–	–
58	3	–	–	19.16	7.68	19.16	7.68	20.05	8.57	20.00	8.52	–	–	–	–	–	–	–	–	–	–	–	–
68	3	–	–	19.87	7.72	19.87	7.72	20.75	8.60	20.71	8.56	–	–	–	–	–	–	–	–	–	–	–	–
88	3	–	–	22.12	7.48	22.12	7.48	23.01	8.37	22.89	8.25	25.31	10.67	–	–	–	–	–	–	–	–	–	–
108	3	–	–	25.13	6.89	25.13	6.89	25.92	7.68	25.76	7.52	28.18	9.94	30.80	12.56	–	–	–	–	–	–	–	–
128	3	–	–	–	–	27.20	6.43	27.97	7.20	27.84	7.07	30.22	9.45	32.87	12.10	34.86	14.09	37.90	14.13	–	–	–	–
148	3	–	–	–	–	–	–	31.14	6.83	30.96	6.65	33.35	9.04	35.77	11.46	37.87	13.56	37.91	13.60	41.20	16.89	–	–
168	3	–	–	–	–	–	–	–	–	–	–	37.01	8.72	39.45	11.16	41.56	13.27	41.60	13.31	44.88	16.59	45.06	16.77

Output shaft dimensions

C-face – flange mounted – solid shaft

Four- and five-stage reduction

BF_4C_
BF_5C_
BF_4L_
BF_5L_

Metric output shaft

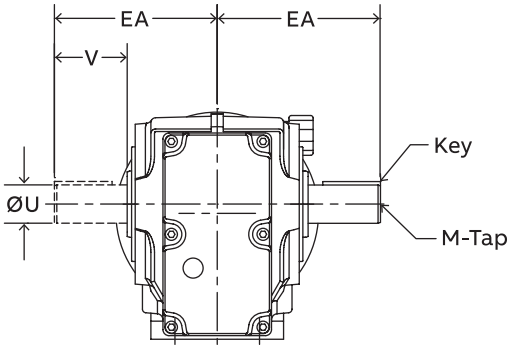

B14 Output flange

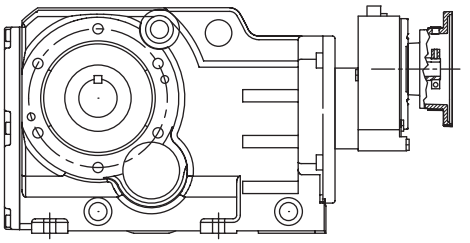

4 Stage reduction

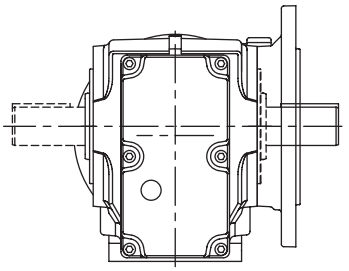

B5 Output flange

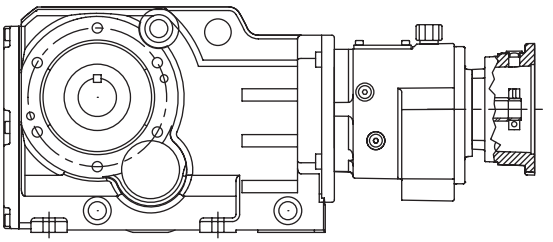

5 Stage reduction

	Standard inch output shaft							Standard metric output shaft							
	Ø U	Tol.	UY	V	EA	Key	M-Tap	Ø U	Tol.	UY	V	Vo	EA	Key	M-Tap
48	1.250	+0.0000 0.0005	1.37	2.36	5.31	1/4 x 1/4 x 1-7/8	3/8-16 UNC X 0.87	30	+0.015 +0.002	33	60	4	135	8 x 7 x 50	M10 x 22
68	1.625	+0.0000 -0.0010	1.80	3.15	6.69	3/8 x 3/8 x 2-5/8	5/8-11 UNC X 1.42	40	+0.018 +0.002	43	80	5	170	12 x 8 x 70	M16 x 36
88	2.000	+0.0000 -0.0010	2.22	3.94	8.07	1/2 x 1/2 x 3-1/4	3/4-10 UNC X 1.65	50	+0.030 +0.011	54	100	10	205	14 x 9 x 80	M16 x 36
108	2.375	+0.0000 -0.0010	2.65	4.72	9.45	5/8 x 5/8 x 3-11/16	3/4-10 UNC X 1.65	60	+0.030 +0.011	64	120	5	240	18 x 11 x 100	M20 x 42
128	2.875	+0.0000 -0.0010	3.21	5.51	11.42	3/4 x 3/4 x 4	3/4-10 UNC X 1.65	70	+0.035 +0.013	75	140	8	290	20 x 12 x 125	M20 x 42
148	3.625	+0.0000 -0.0010	4.01	6.69	13.58	7/8 x 7/8 x 5-1/4	1-8 UNC X 1.97	90	+0.035 +0.013	95	170	15	345	25 x 14 x 140	M24 x 50
168	4.375	+0.0000 -0.0010	4.82	8.27	16.34	1 x 1 x 6-5/8	1-8 UNC X 1.97	110	+0.035 +0.013	116	210	15	415	28x 16 x 180	M24 x 50

See page RHB-204 for optional solid shaft dimensions

Gearcase dimensions

C-face – flange mounted – solid shaft

Four- and five-stage reduction

BF_4C_
BF_5C_
BF_4L_
BF_5L_

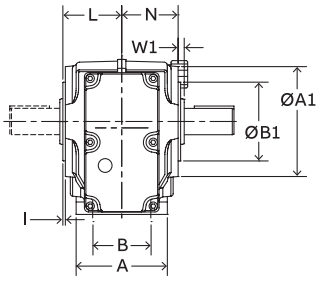

B14 Output flange
Sizes 38-168

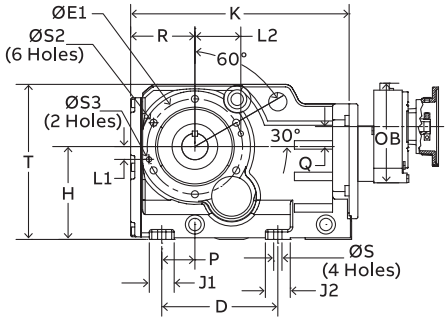

B14 Output flange
Sizes 38-128

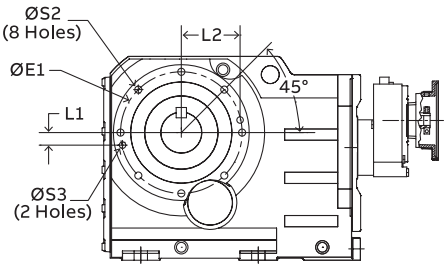

B14 Output flange
Sizes 148-168

4 Stage reduction

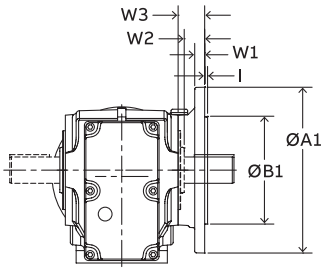

B5 Output flange
Sizes 38-168

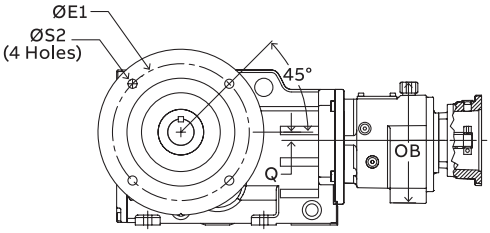

B5 Output flange
Sizes 38-108

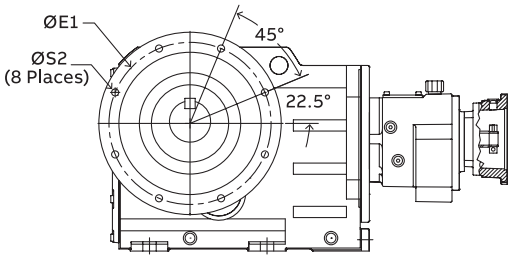

B5 Output flange
Sizes 128-168

5 Stage reduction

	Mounting dimensions				Outline dimensions									4 stage		5 stage	
	B	D	H	Ø S	A	K	L	N	P	R	T	J1	J2	Q	OB	Q	OB
48	2.76	5.51	4.41	M10 X 0.66	4.33	10.37	2.80	2.68	1.58	3.05	7.36	1.18	1.18	1.50	7.83	0.43	6.26
68	3.46	5.98	5.51	M12 X 0.93	5.51	12.15	3.39	3.25	1.65	3.48	9.09	1.97	1.97	1.67	7.83	0.26	6.29
88	4.53	6.69	7.09	M16 X 1.10	6.69	14.64	3.80	3.94	1.89	4.33	11.61	2.17	2.17	1.14	7.83	0.79	6.29
108	6.57	8.86	8.35	M16 X 1.10	8.27	18.24	4.53	4.37	2.56	5.33	13.58	2.76	2.76	2.03	9.84	0.51	8.86
128	8.39	9.76	10.43	M20 X 1.33	10.04	20.77	5.71	5.55	3.27	6.16	16.65	3.15	3.15	1.77	9.84	0.79	8.86
148	8.27	11.42	12.40	M24 X 1.61	11.26	24.31	6.65	6.46	3.94	7.71	19.80	3.54	3.54	1.61	11.57	1.46	8.86
168	9.45	13.78	14.76	M30 x 1.57	12.76	28.29	7.84	7.64	4.53	8.68	23.62	4.33	4.33	1.10	11.57	1.97	10.68

	B14 mounting dimensions									B5 mounting dimensions							
	Ø A1	Ø B1	Ø E1	Ø S2	I	W1	Ø S3	L1	L2	Ø A1	Ø B1	Ø E1	Ø S2	I	W1	W2	W3
48	5.20	3.7402	4.53	M10 X 0.66	0.12	0.29	–	–	–	7.87	5.1182	6.50	0.43	0.14	0.47	0.97	1.26
68	5.91	4.3308	5.12	M12 X 0.82	0.14	0.30	–	–	–	9.84	7.0867	8.47	0.53	0.16	0.30	0.59	1.20
88	7.48	5.1182	6.50	M12 X 0.82	0.14	0.34	–	–	–	11.81	9.0552	10.43	0.53	0.16	0.63	1.46	1.79
108	9.65	7.0867	8.47	M16 X 1.10	0.16	0.35	0.47	1.10	4.06	13.78	9.8419	11.81	0.69	0.20	0.71	1.42	1.77
128	11.61	9.0552	10.43	M16 X 1.10	0.16	0.35	0.47	1.69	4.92	17.71	13.7788	15.75	0.69	0.20	0.87	1.63	1.99
148	13.19	9.8419	11.81	M20 X 1.33	0.20	0.43	0.63	1.22	5.71	17.71	13.7788	15.75	0.69	0.20	0.87	1.61	2.05
168	15.75	11.8104	13.78	M20 X 1.33	0.20	0.43	0.63	1.46	3.73	21.65	17.7157	19.69	0.69	0.20	0.98	2.01	2.44

Clamp collar – NEMA / IEC dimensions

C-face – flange mounted – solid shaft

Four- and five-stage reduction

BF_4CN_
BF_4CI_
BF_5CN_
BF_5CI_

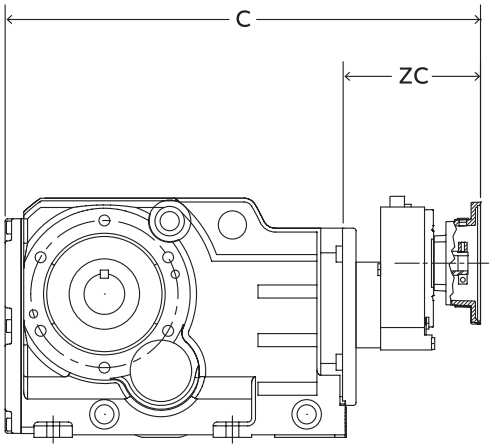

4 Stage reduction

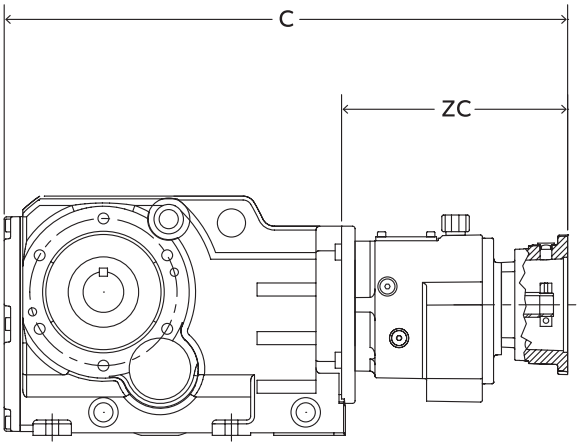

5 Stage reduction

NEMA clamp collar motor dimensions

Reducer size	Reducer stage	56C		140TC		180TC		210TC	
		C	ZC	C	ZC	C	ZC	C	ZC
48	4	18.82	8.45	19.52	9.15	19.82	9.45	–	–
	5	19.97	9.60	20.64	10.27	20.97	10.60	–	–
68	4	20.21	8.06	20.91	8.76	21.21	9.06	–	–
	5	21.36	9.21	22.03	9.88	22.36	10.21	–	–
88	4	22.64	8.00	23.34	8.70	23.64	9.00	–	–
	5	23.79	9.15	24.46	9.82	24.79	10.15	–	–
108	4	26.06	7.82	26.66	8.42	28.26	10.02	–	–
	5	28.40	10.16	29.07	10.83	30.64	12.40	–	–
128	4	28.91	8.14	29.51	8.74	31.11	10.34	–	–
	5	30.78	10.01	31.45	10.68	33.02	12.25	–	–
148	4	32.87	8.56	33.57	9.26	35.07	10.76	36.97	12.66
	5	34.11	9.80	34.78	10.47	36.35	12.04	–	–
168	4	36.70	8.41	37.40	9.11	38.90	10.61	40.80	12.51
	5	39.92	11.63	40.59	12.30	42.09	13.80	44.01	15.72

IEC clamp collar motor dimensions

Reducer size	Reducer stage	71D		80D		90D		100D		112D		132D	
		C	ZC	C	ZC	C	ZC	C	ZC	C	ZC	C	ZC
48	4	18.12	7.75	19.02	8.65	19.02	8.65	19.32	8.95	–	–	–	–
	5	19.26	8.89	20.20	9.83	20.20	9.83	20.50	10.13	–	–	–	–
68	4	19.51	7.36	20.41	8.26	20.41	8.26	20.71	8.56	–	–	–	–
	5	20.65	8.50	21.59	9.44	21.59	9.44	21.89	9.74	–	–	–	–
88	4	21.94	7.30	22.84	8.20	22.84	8.20	23.14	8.50	–	–	–	–
	5	23.08	8.44	24.02	9.38	24.02	9.38	24.32	9.68	–	–	–	–
108	4	25.36	7.12	26.26	8.02	26.26	8.02	26.56	8.32	26.86	8.62	–	–
	5	27.69	9.45	28.64	10.40	28.64	10.40	28.93	10.69	29.27	11.03	–	–
128	4	28.21	7.44	29.11	8.34	29.11	8.34	29.41	8.64	29.71	8.94	–	–
	5	30.07	9.30	31.02	10.25	31.02	10.25	31.31	10.54	31.65	10.88	–	–
148	4	32.17	7.86	33.17	8.86	33.17	8.86	33.47	9.16	33.67	9.36	35.27	10.96
	5	33.40	9.09	34.35	10.04	34.35	10.04	34.64	10.33	34.98	10.67	–	–
168	4	36.00	7.71	37.00	8.71	37.00	8.71	37.30	9.01	37.50	9.21	39.10	10.81
	5	39.21	10.92	40.16	11.87	40.16	11.87	40.45	12.16	40.71	12.42	42.32	14.03

See page RHB-204 for optional solid shaft dimensions

Three-piece coupled – NEMA/IEC dimensions

C-face – flange mounted – solid shaft

Four- and five-stage reduction

BF_4LN_
BF_4LI_
BF_5LN_
BF_5LI_

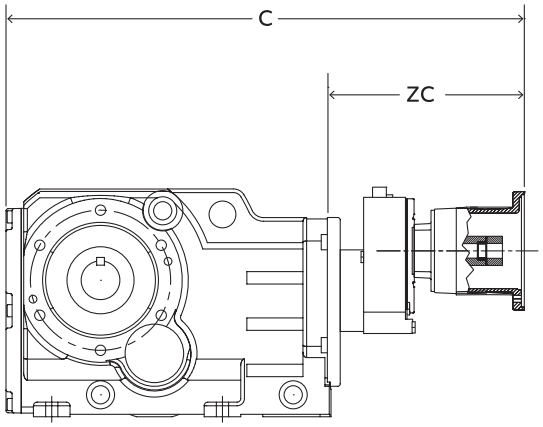

4 Stage reduction

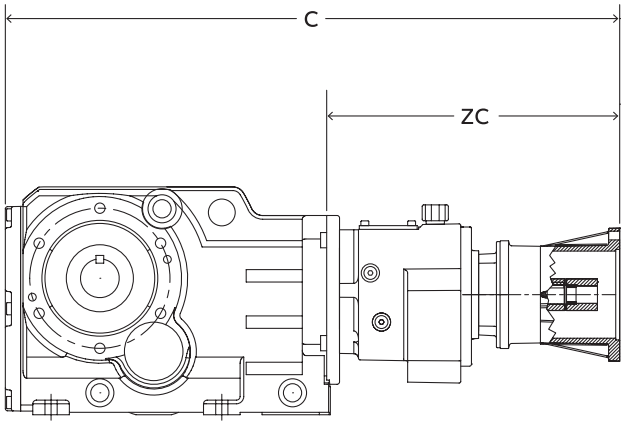

5 Stage reduction

NEMA Three-piece coupled motor dimensions

Reducer size	Reducer stage	56C		140TC		180TC		210TC	
		C	ZC	C	ZC	C	ZC	C	ZC
48	4	21.92	11.55	23.32	12.95	–	–	–	–
	5	23.10	12.73	24.51	14.14	–	–	–	–
68	4	23.31	11.16	24.71	12.56	–	–	–	–
	5	24.49	12.34	25.90	13.75	–	–	–	–
88	4	25.74	11.10	27.14	12.50	–	–	–	–
	5	26.92	12.28	28.33	13.69	–	–	–	–
108	4	29.16	10.92	30.56	12.32	31.86	13.62	–	–
	5	31.53	13.29	32.95	14.71	34.23	15.99	–	–
128	4	32.01	11.24	33.41	12.64	34.71	13.94	–	–
	5	33.91	13.14	35.33	14.56	36.61	15.84	–	–
148	4	36.07	11.76	37.47	13.16	38.67	14.36	40.57	16.26
	5	37.24	12.93	38.66	14.35	39.94	15.63	–	–
168	4	39.90	11.61	41.30	13.01	42.50	14.21	44.40	16.11
	5	43.05	14.76	44.47	16.18	45.67	17.38	47.82	19.53

IEC Three-piece coupled motor dimensions

Reducer size	Reducer stage	71D		80D		90D		100D		112D		132D	
		C	ZC	C	ZC	C	ZC	C	ZC	C	ZC	C	ZC
48	4	–	–	23.32	12.95	23.32	12.95	24.12	13.75	–	–	–	–
	5	–	–	24.43	14.06	24.43	14.06	25.32	14.95	–	–	–	–
68	4	–	–	24.71	12.56	24.71	12.56	25.51	13.36	–	–	–	–
	5	–	–	25.82	13.67	25.82	13.67	26.71	14.56	–	–	–	–
88	4	–	–	27.14	12.50	27.14	12.50	27.94	13.30	–	–	–	–
	5	–	–	28.25	13.61	28.25	13.61	29.14	14.50	–	–	–	–
108	4	–	–	30.46	12.22	30.46	12.22	31.36	13.12	31.36	13.12	–	–
	5	–	–	32.87	14.63	32.87	14.63	33.75	15.51	33.71	15.47	–	–
128	4	–	–	33.31	12.54	33.31	12.54	34.21	13.44	34.21	13.44	–	–
	5	–	–	35.25	14.48	35.25	14.48	36.13	15.36	36.09	15.32	–	–
148	4	–	–	–	–	37.37	13.06	38.27	13.96	38.17	13.86	40.57	16.26
	5	–	–	38.58	14.27	38.58	14.27	39.46	15.15	39.42	15.11	–	–
168	4	–	–	–	–	41.20	12.91	42.10	13.81	42.00	13.71	44.40	16.11
	5	–	–	44.39	16.10	44.39	16.10	45.28	16.99	45.16	16.87	47.58	19.29

Output shaft dimensions

Separate – foot mounted – solid shaft

Triple reduction

BB_3SI_
BB_3SM_

Metric output shaft

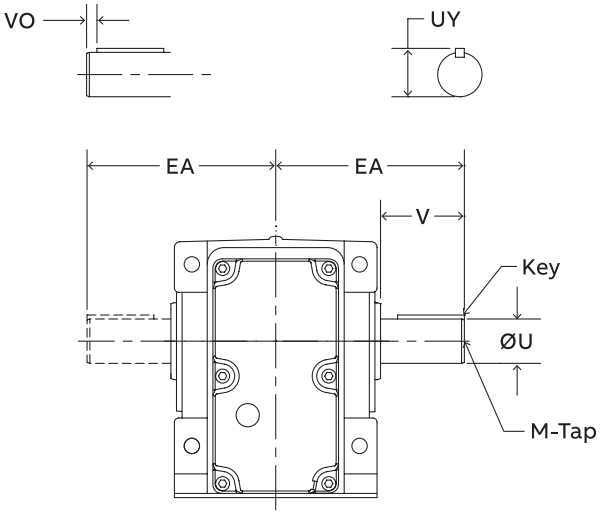

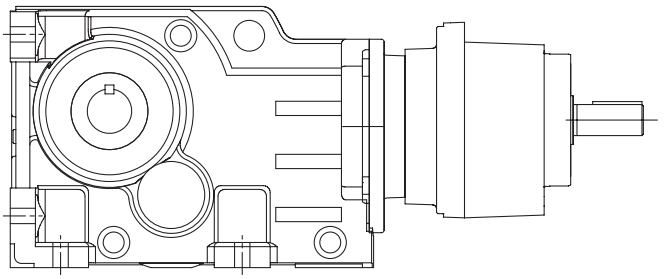

Standard inch output shaft								Standard metric output shaft							
	Ø U	Tol.	UY	V	EA	Key	M-Tap	Ø U	Tol.	UY	V	VO	EA	Key	M-Tap
38	1.000	+0.0000 -0.0005	1.11	1.97	4.33	1/4 x 1/4 x 1-5/8	3/8-16 UNC X 0.87	25	+0.015 +0.002	28	50	5	110	8 x 7 x 40	M10 x 22
48	1.250	+0.0000 -0.0005	1.37	2.36	5.31	1/4 x 1/4 x 1-7/8	3/8-16 UNC X 0.87	30	+0.015 +0.002	33	60	4	135	8 x 7 x 50	M10 x 22
58	1.375	+0.0000 -0.0005	1.49	2.76	5.99	5/16 x 5/16 x 2-1/8	1/2-13 UNC x 1.12	35	+0.014 +0.002	38	70	7	152	10 x 8 x 56	M12 x 28
68	1.625	+0.0000 -0.0010	1.80	3.15	6.69	3/8 x 3/8 x 2-5/8	5/8-11 UNC X 1.42	40	+0.018 +0.002	43	80	5	170	12 x 8 x 70	M16 x 36
88	2.000	+0.0000 -0.0010	2.22	3.94	8.07	1/2 x 1/2 x 3-1/4	3/4-10 UNC X 1.65	50	+0.030 +0.011	54	100	10	205	14 x 9 x 80	M16 x 36
108	2.375	+0.0000 -0.0010	2.65	4.72	9.45	5/8 x 5/8 x 3-11/16	3/4-10 UNC X 1.65	60	+0.030 +0.011	64	120	5	240	18 x 11 x 100	M20 x 42
128	2.875	+0.0000 -0.0010	3.21	5.51	11.42	3/4 x 3/4 x 4	3/4-10 UNC X 1.65	70	+0.035 +0.013	75	140	8	290	20 x 12 x 125	M20 x 42
148	3.625	+0.0000 -0.0010	4.01	6.69	13.58	7/8 x 7/8 x 5-1/4	1-8 UNC X 1.97	90	+0.035 +0.013	95	170	15	345	25 x 14 x 140	M24 x 50
168	4.375	+0.0000 -0.0010	4.82	8.27	16.34	1 x 1 x 6-5/8	1-8 UNC X 1.97	110	+0.035 +0.013	116	210	15	415	28 x 16 x 180	M24 x 50

See page RHB-204 for optional solid shaft dimensions

Gearcase dimensions

Separate – foot mounted – solid shaft

Triple reduction

BB_3SI_
BB_3SM_

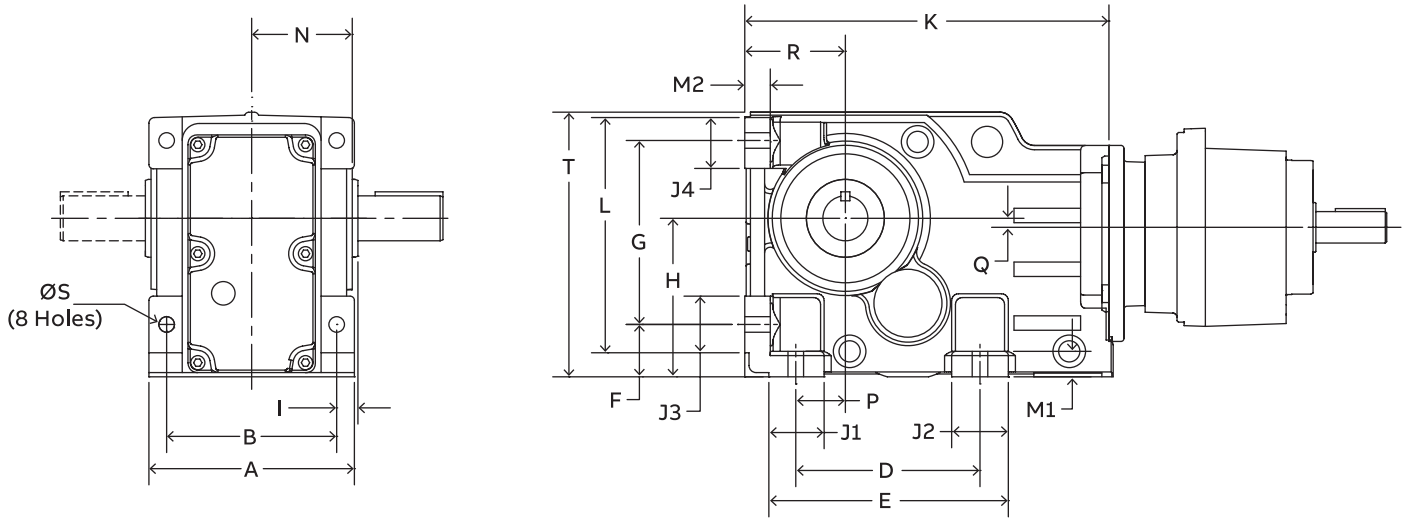

	Mounting dimensions								
	A	B	D	E	F	G	H	I	ØS
38	4.72	3.94	4.33	5.55	1.26	4.53	3.94	0.39	0.43
48	5.71	4.72	5.12	6.65	1.45	5.12	4.41	0.59	0.43
58	6.30	5.12	5.12	6.78	1.77	5.91	5.20	0.72	0.53
68	6.69	5.51	4.72	6.69	1.77	6.30	5.51	0.79	0.53
88	7.87	6.50	5.91	8.07	2.17	7.87	7.09	0.89	0.71
108	9.06	7.09	7.09	10.04	2.76	9.17	8.35	1.18	0.87
128	11.42	9.45	9.45	12.60	2.95	11.61	10.43	1.18	1.02
148	13.39	10.63	11.02	15.20	3.74	14.17	12.40	1.58	1.30
168	15.75	12.99	13.78	18.11	4.33	16.54	14.76	1.58	1.54

	Outline dimensions												
	J1	J2	J3	J4	M1	M2	K	P	L	N	R	T	Q
38	1.38	1.26	1.30	1.22	0.63	0.63	8.94	1.10	5.79	2.28	2.48	6.58	0.37
48	1.54	1.58	1.58	1.42	0.71	0.71	10.12	1.38	6.54	2.80	2.80	7.36	0.43
58	1.68	1.68	1.96	1.79	0.81	0.73	11.30	1.18	7.72	3.15	3.15	8.58	0.39
68	1.97	1.97	1.97	1.89	0.87	0.87	12.21	1.18	8.19	3.39	3.54	9.09	0.26
88	2.17	2.17	2.17	2.56	0.98	0.98	14.72	1.58	10.31	3.94	4.41	11.61	0.79
108	2.76	3.15	2.76	2.91	1.18	1.18	18.11	2.17	12.09	4.53	5.20	13.58	0.51
128	3.15	3.15	3.15	3.54	1.38	1.38	20.91	2.95	15.09	5.71	6.30	16.65	0.79
148	3.54	4.17	3.54	3.50	1.58	1.58	24.49	3.74	17.67	6.65	7.87	19.80	1.46
168	4.33	4.33	4.33	4.33	1.77	1.77	28.47	4.53	20.87	7.84	8.86	23.62	1.97

Separate input shaft dimensions

BB_3SI_
BB_3SM_

Separate – foot mounted – solid shaft

Triple reduction

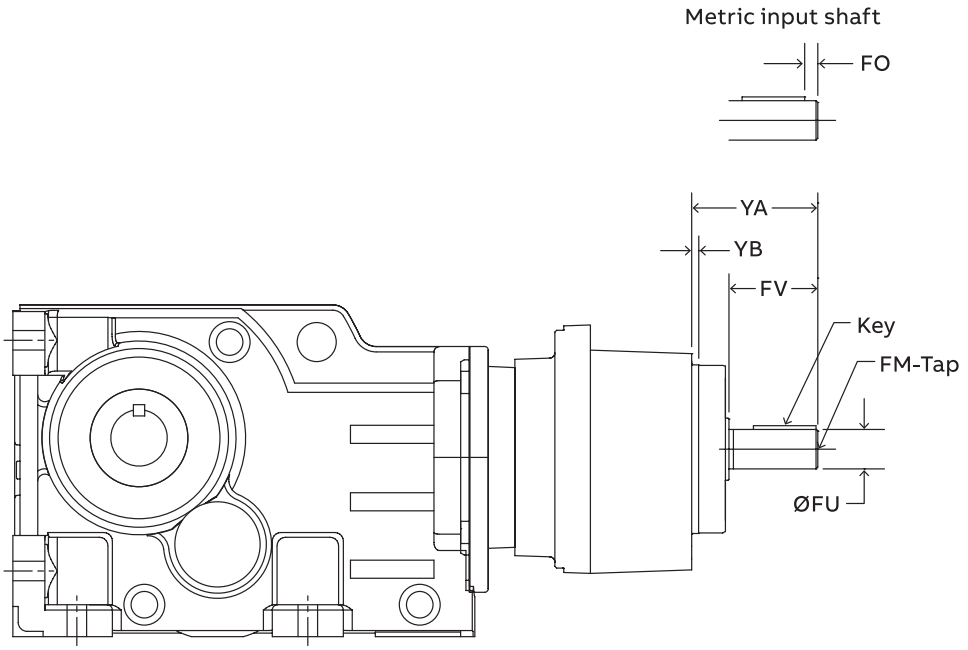

	Separate input mounting dimensions							
	Ø FU	Tol	FO	FV	YA	YB	FM x Depth	Key
71	0.625	+0.0000 -0.0005	–	1.57	2.40	0.16	8-32 UNC x 0.49	3/16 x 3/16 x 1-5/16
	16	+0.012 +0.001	4	40			M5 x 12.5	5 x 5 x 32
80	0.750	+0.0000 -0.0005	–	1.57	2.40	0.16	1/4-20 UNC x 0.63	3/16 x 3/16 x1-5/16
	19	+0.015 +0.002	4	10			M6 x 16	6 x 6 x 32
90	0.875	+0.0000 -0.0005	–	1.97	2.80	0.16	5/16-18 UNC x 0.75	3/16 x 3/16 x 1-5/8
	24	+0.015 +0.002	5	50			M8 x 19	8 x 7 x 40
100	1.125	+0.0000 -0.0005	–	2.36	3.27	0.16	3/8-16 UNC x 0.87	1/4 x 1/4 x 2
	28	+0.015 +0.002	5	60			M10 x 22	8 x 7 x 50
112	1.250	+0.0000 -0.0005	–	2.36	3.27	0.16	3/8-16 UNC x 0.87	1/4 x 1/4 x 2
	28	+0.015 +0.002	5	60			M10 x 22	8 x 7 x 50
132	1.375	+0.0000 -0.0005	–	3.15	6.61	0.14	3/8-16 UNC x 1.10	5/16 x 5/16 x 2-3/4
	38	+0.018 +0.002	5	80			M12 x 28	10 x 8 x 70
160	1.625	+0.0000 -0.0010	–	4.33	8.46	0.14	5/8-11 UNC x 1.42	3/8 x 3/8 x 3-1/2
	42	+0.018 +0.002	10	110			M16 x 36	12 x 8 x 90
180	2.125	+0.0000 -0.0010	–	4.33	9.25	0.20	3/4-10 UNC x 1.65	1/2 x 1/2 x 3-5/8
	55	+0.030 +0.011	10	110			M20 x 42	16 x 10 x 90
225	2.125	+0.0000 -0.0010	–	4.33	9.05	0.20	3/4-10 UNC x 1.65	1/2 x 1/2 x 3-5/8
	60	+0.030 +0.011	15	140			M20 x 42	18 x 11 x 110
250	2.375	+0.0000 -0.0010	—	5.51	10.20	0.20	3/4-10 UNC x 1.65	5/8 x 5/8 x 4-3/8
	65	+0.030 +0.011	15	140			M20 x 42	18 x 11 x 110

Separate input shaft dimensions

BB_3SI_
BB_3SM_

Separate – foot mounted – solid shaft

Triple reduction

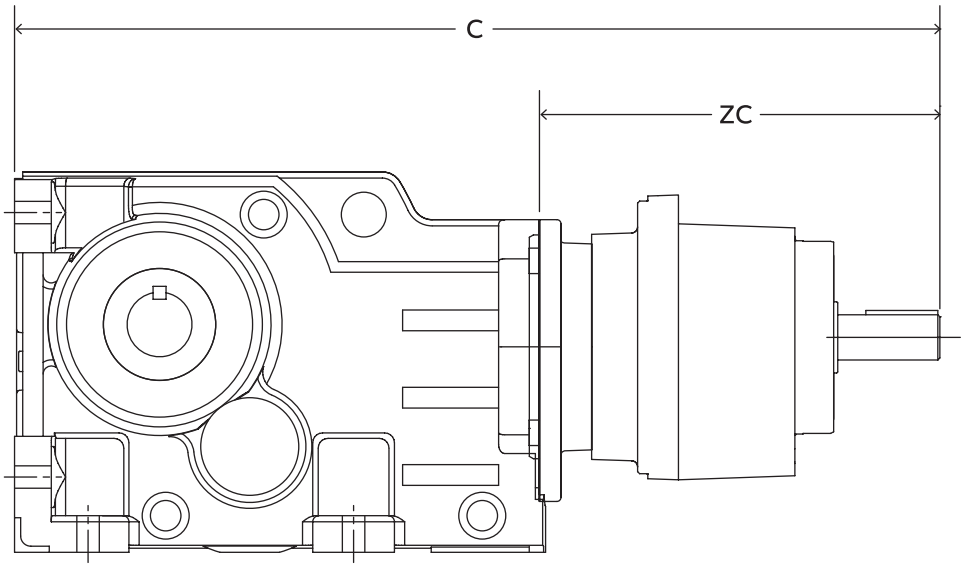

Inch separate input dimensions

Reducer size	Reducer stage	71		80		90		100		112		132		160		180		225		250	
		C	ZC	C	ZC	C	ZC	C	ZC	C	ZC	C	ZC	C	ZC	C	ZC	C	ZC	C	ZC
38	3	14.89	5.95	16.27	7.33	16.66	7.72	17.29	8.35	–	–	–	–	–	–	–	–	–	–	–	–
48	3	16.06	5.94	17.45	7.33	17.84	7.72	18.47	8.35	–	–	–	–	–	–	–	–	–	–	–	–
58	3	16.99	5.69	18.37	7.07	18.77	7.47	19.09	7.79	19.43	8.13	–	–	–	–	–	–	–	–	–	–
68	3	17.96	5.75	19.34	7.13	19.73	7.52	20.36	8.15	20.40	8.19	–	–	–	–	–	–	–	–	–	–
88	3	20.24	5.52	21.61	6.89	22.01	7.29	22.64	7.92	22.60	7.88	25.91	11.19	–	–	–	–	–	–	–	–
108	3	–	–	24.41	6.30	24.80	6.69	25.31	7.20	25.24	7.13	28.58	10.47	30.28	12.17	–	–	–	–	–	–
128	3	–	–	–	–	27.13	6.22	27.64	6.73	27.59	6.68	30.87	9.96	32.62	11.71	33.43	12.52	–	–	–	–
148	3	–	–	–	–	–	–	30.85	6.36	30.75	6.26	34.04	9.55	35.55	11.06	36.48	11.99	37.56	13.07	–	–
168	3	–	–	–	–	–	–	–	–	–	–	37.70	9.23	39.24	10.77	40.16	11.69	41.25	12.78	42.41	13.94

Metric separate input dimensions (dimensions in mm)

Reducer size	Reducer stage	71		80		90		100		112		132		160		180		225		250	
		C	ZC	C	ZC	C	ZC	C	ZC	C	ZC	C	ZC	C	ZC	C	ZC	C	ZC	C	ZC
38	3	378	151	413	186	423	196	439	212	–	–	–	–	–	–	–	–	–	–	–	–
48	3	408	151	443	186	453	196	469	212	–	–	–	–	–	–	–	–	–	–	–	–
58	3	432	145	467	180	477	190	485	198	494	207	–	–	–	–	–	–	–	–	–	–
68	3	456	146	491	181	501	191	517	207	518	208	–	–	–	–	–	–	–	–	–	–
88	3	514	140	549	175	559	185	575	201	574	200	658	284	–	–	–	–	–	–	–	–
108	3	–	–	620	160	630	170	643	183	641	181	726	266	769	309	–	–	–	–	–	–
128	3	–	–	–	–	689	158	702	171	701	170	784	253	829	298	849	318	–	–	–	–
148	3	–	–	–	–	–	–	784	162	781	159	865	243	903	281	927	305	984	362	–	–
168	3	–	–	–	–	–	–	–	–	–	–	958	235	997	274	1020	297	1078	355	1077	354

Output shaft dimensions

Separate – foot mounted – solid shaft
Four- and five-stage reduction

BB_4SI_
BB_4SM_
BB_5SI_
BB_5SM_

Metric output shaft

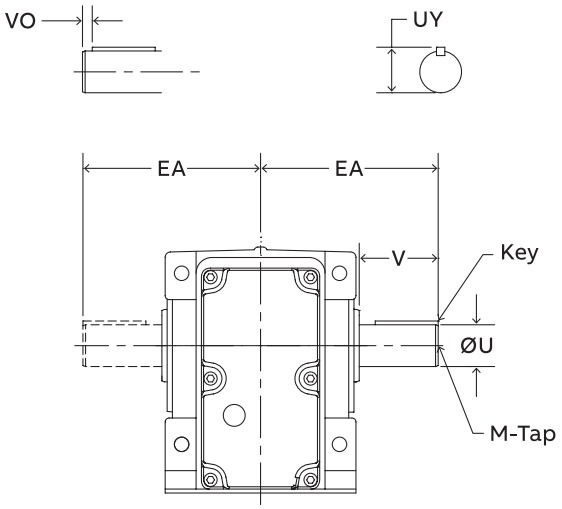

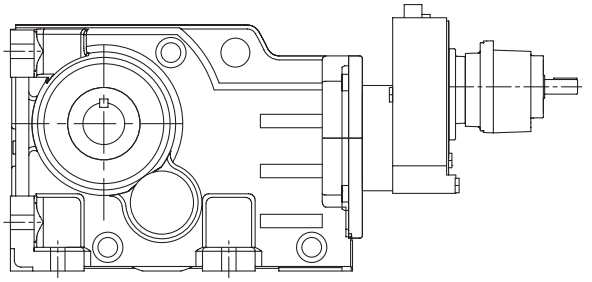

4 Stage reduction

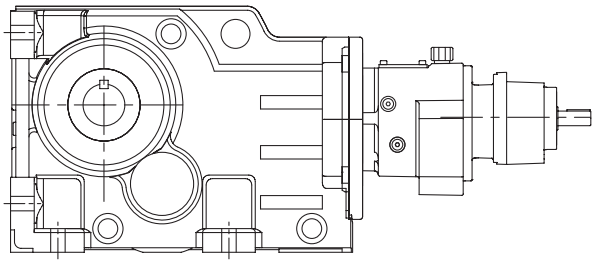

5 Stage reduction

	Standard inch output shaft							Standard metric output shaft							
	Ø U	Tol.	UY	V	EA	Key	M-Tap	Ø U	Tol.	UY	V	Vo	EA	Key	M-Tap
48	1.250	+0.0000 0.0005	1.37	2.36	5.31	1/4 x 1/4 x 1-7/8	3/8-16 UNC X 0.87	30	+0.015 +0.002	33	60	4	135	8 x 7 x 50	M10 x 22
68	1.625	+0.0000 -0.0010	1.80	3.15	6.69	3/8 x 3/8 x 2-5/8	5/8-11 UNC X 1.42	40	+0.018 +0.002	43	80	5	170	12 x 8 x 70	M16 x 36
88	2.000	+0.0000 -0.0010	2.22	3.94	8.07	1/2 x 1/2 x 3-1/4	3/4-10 UNC X 1.65	50	+0.030 +0.011	54	100	10	205	14 x 9 x 80	M16 x 36
108	2.375	+0.0000 -0.0010	2.65	4.72	9.45	5/8 x 5/8 x 3-11/16	3/4-10 UNC X 1.65	60	+0.030 +0.011	64	120	5	240	18 x 11 x 100	M20 x 42
128	2.875	+0.0000 -0.0010	3.21	5.51	11.42	3/4 x 3/4 x 4	3/4-10 UNC X 1.65	70	+0.035 +0.013	75	140	8	290	20 x 12 x 125	M20 x 42
148	3.625	+0.0000 -0.0010	4.01	6.69	13.58	7/8 x 7/8 x 5-1/4	1-8 UNC X 1.97	90	+0.035 +0.013	95	170	15	345	25 x 14 x 140	M24 x 50
168	4.375	+0.0000 -0.0010	4.82	8.27	16.34	1 x 1 x 6-5/8	1-8 UNC X 1.97	110	+0.035 +0.013	116	210	15	415	28x 16 x 180	M24 x 50

See page RHB-204 for optional solid shaft dimensions

Gearcase dimensions

Separate – foot mounted – solid shaft

Four- and five-stage reduction

BB_4SI_
BB_4SM_
BB_5SI_
BB_5SM_

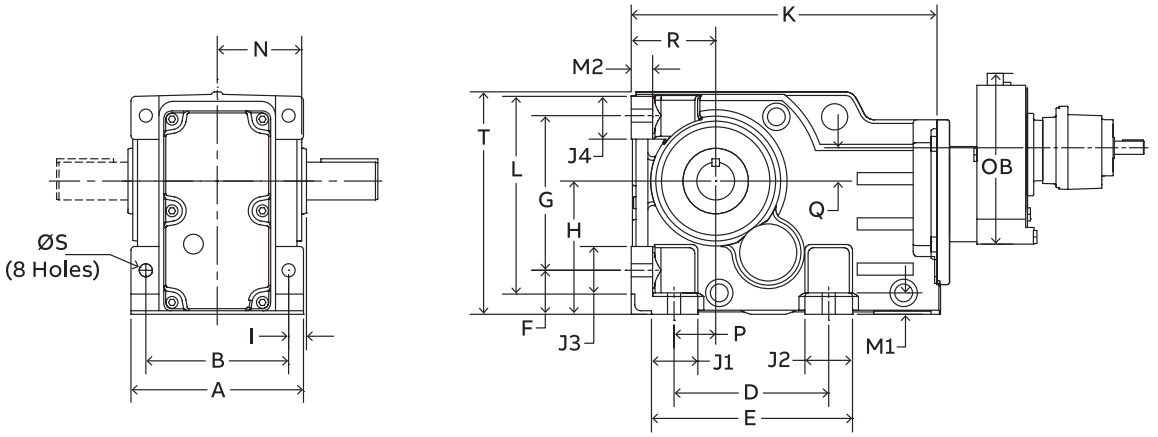

4 Stage reduction

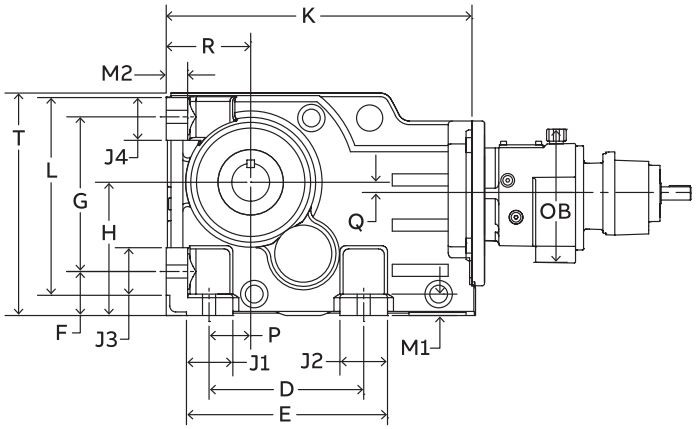

5 Stage reduction

	Mounting dimensions								
	A	B	D	E	F	G	H	I	ØS
48	5.71	4.72	5.12	6.65	1.45	5.12	4.41	0.59	0.43
68	6.69	5.51	4.72	6.69	1.77	6.30	5.51	0.79	0.53
88	7.87	6.50	5.91	8.07	2.17	7.87	7.09	0.89	0.71
108	9.06	7.09	7.09	10.04	2.76	9.17	8.35	1.18	0.87
128	11.42	9.45	9.45	12.60	2.95	11.61	10.43	1.18	1.02
148	13.39	10.63	11.02	15.20	3.74	14.17	12.40	1.58	1.30
168	15.75	12.99	13.78	18.11	4.33	16.54	14.76	1.58	1.54

	Outline dimensions												4 stage		5 stage	
	J1	J2	J3	J4	M1	M2	K	P	L	N	R	T	Q	OB	Q	OB
48	1.54	1.58	1.58	1.42	0.71	0.71	10.12	1.38	6.54	2.80	2.80	7.36	1.50	7.83	0.43	6.26
68	1.97	1.97	1.97	1.89	0.87	0.87	12.21	1.18	8.19	3.39	3.54	9.09	1.67	7.83	0.26	6.29
88	2.17	2.17	2.17	2.56	0.98	0.98	14.72	1.58	10.31	3.94	4.41	11.61	1.14	7.83	0.79	6.29
108	2.76	3.15	2.76	2.91	1.18	1.18	18.11	2.17	12.09	4.53	5.20	13.58	2.03	9.84	0.51	8.86
128	3.15	3.15	3.15	3.54	1.38	1.38	20.91	2.95	15.09	5.71	6.30	16.65	1.77	9.84	0.79	8.86
148	3.54	4.17	3.54	3.50	1.58	1.58	24.49	3.74	17.67	6.65	7.87	19.80	1.61	11.57	1.46	8.86
168	4.33	4.33	4.33	4.33	1.77	1.77	28.47	4.53	20.87	7.84	8.86	23.62	1.10	11.57	1.97	10.68

Separate input shaft dimensions

Separate – foot mounted – solid shaft

Four- and five-stage reduction

BB_4SI_
BB_4SM_
BB_5SI_
BB_5SM_

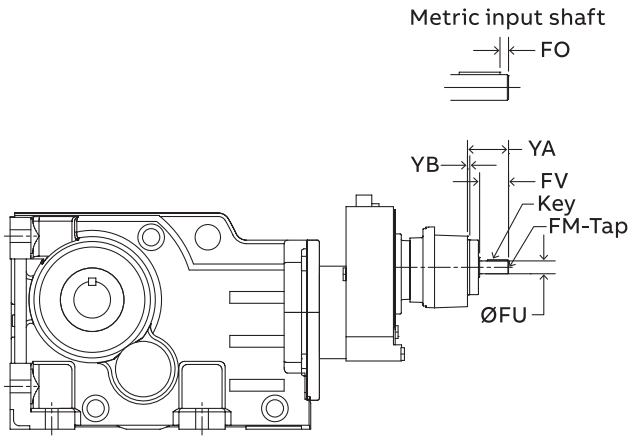

4 Stage reduction

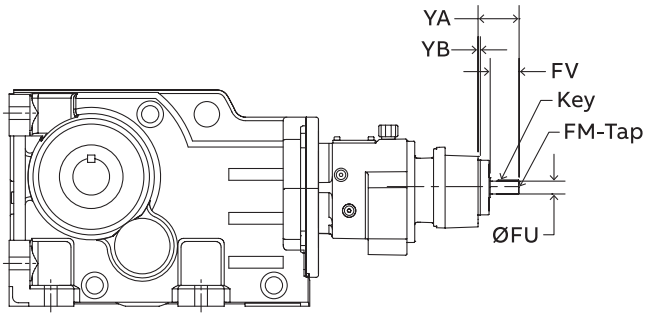

5 Stage reduction

	Separate input mounting dimensions							
	Ø FU	Tol	FO	FV	YA	YB	FM x Depth	Key
71	0.625	+0.0000 -0.0005	–	1.57	2.40	0.16	8-32 UNC x 0.49	3/16 x 3/16 x 1-5/16
	16	+0.012 +0.001	4	40			M5 x 12.5	5 x 5 x 32
80	0.750	+0.0000 -0.0005	–	1.57	2.40	0.16	1/4-20 UNC x 0.63	3/16 x 3/16 x1-5/16
	19	+0.015 +0.002	4	10			M6 x 16	6 x 6 x 32
90	0.875	+0.0000 -0.0005	–	1.97	2.80	0.16	5/16-18 UNC x 0.75	3/16 x 3/16 x 1-5/8
	24	+0.015 +0.002	5	50			M8 x 19	8 x 7 x 40
100	1.125	+0.0000 -0.0005	–	2.36	3.27	0.16	3/8-16 UNC x 0.87	1/4 x 1/4 x 2
	28	+0.015 +0.002	5	60			M10 x 22	8 x 7 x 50
112	1.250	+0.0000 -0.0005	–	2.36	3.27	0.16	3/8-16 UNC x 0.87	1/4 x 1/4 x 2
	28	+0.015 +0.002	5	60			M10 x 22	8 x 7 x 50
132	1.375	+0.0000 -0.0005	–	3.15	6.61	0.14	3/8-16 UNC x 1.10	5/16 x 5/16 x 2-3/4
	38	+0.018 +0.002	5	80			M12 x 28	10 x 8 x 70

Separate input shaft dimensions

Separate – foot mounted – solid shaft

Four- and five-stage reduction

BB_4SI_
BB_4SM_
BB_5SI_
BB_5SM_

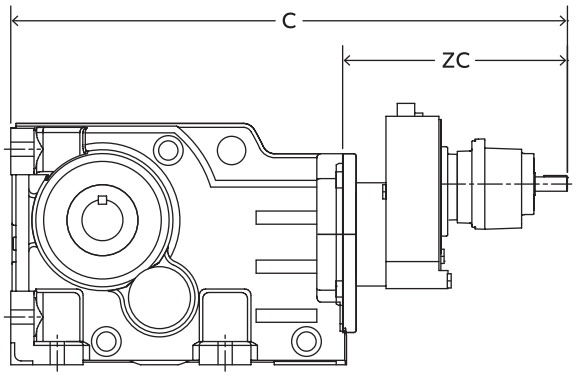

4 Stage reduction

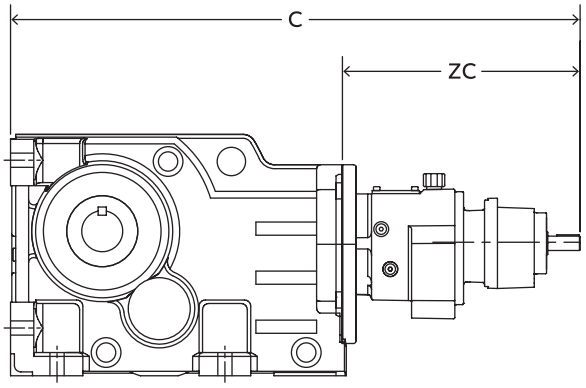

5 Stage reduction

Inch separate input dimensions

Reducer size	Reducer stage	71		80		90		100		112		132	
		C	ZC	C	ZC	C	ZC	C	ZC	C	ZC	C	ZC
48	4	21.07	10.95	22.37	12.25	22.77	12.65	23.47	13.35	–	–	–	–
	5	22.20	12.08	23.57	13.45	23.97	13.85	24.60	14.48	–	–	–	–
68	4	22.77	10.56	24.07	11.86	24.47	12.26	25.17	12.96	–	–	–	–
	5	23.90	11.69	25.27	13.06	25.67	13.46	26.30	14.09	–	–	–	–
88	4	25.22	10.50	26.52	11.80	26.92	12.20	27.62	12.90	–	–	–	–
	5	26.35	11.63	27.72	13.00	28.12	13.40	28.75	14.03	–	–	–	–
108	4	28.43	10.32	29.73	11.62	30.13	12.02	30.83	12.72	30.83	12.72	–	–
	5	30.77	12.66	32.15	14.04	32.54	14.43	33.17	15.06	33.21	15.10	–	–
128	4	31.55	10.64	32.85	11.94	33.25	12.34	33.95	13.04	33.95	13.04	–	–
	5	33.42	12.51	34.80	13.89	35.19	14.28	35.82	14.91	35.86	14.95	–	–
148	4	35.55	11.06	36.95	12.46	37.35	12.86	37.95	13.46	37.95	13.46	41.25	16.76
	5	36.79	12.30	38.17	13.68	38.56	14.07	39.19	14.70	39.23	14.74	–	–
168	4	39.38	10.91	40.78	12.31	41.18	12.71	41.78	13.31	41.78	13.31	45.08	16.61
	5	42.60	14.13	43.98	15.51	44.37	15.90	45.00	16.53	44.96	16.49	48.27	19.80

Metric separate input dimensions (dimensions in mm)

Reducer size	Reducer stage	71		80		90		100		112		132	
		C	ZC	C	ZC	C	ZC	C	ZC	C	ZC	C	ZC
48	4	535	278	568	311	578	321	596	339	–	–	–	–
	5	564	307	599	342	609	352	625	368	–	–	–	–
68	4	578	268	611	301	621	311	639	329	–	–	–	–
	5	607	297	642	332	652	342	668	358	–	–	–	–
88	4	641	267	674	300	684	310	702	328	–	–	–	–
	5	669	295	704	330	714	340	730	356	–	–	–	–
108	4	722	262	755	295	765	305	783	323	783	323	–	–
	5	782	322	817	357	827	367	843	383	844	384	–	–
128	4	801	270	834	303	845	313	862	331	862	331	–	–
	5	849	318	884	353	894	363	910	379	911	380	–	–
148	4	903	281	939	317	949	327	964	342	964	342	1048	426
	5	934	312	970	347	979	357	995	373	996	374	–	–
168	4	1000	277	1036	313	1046	323	1061	338	1061	338	1145	422
	5	1082	359	1117	394	1127	404	1143	420	1142	419	1226	503

Output shaft dimensions

Separate – flange mounted – solid shaft

Triple reduction

BF_3SI_
BF_3SM_

Metric output shaft

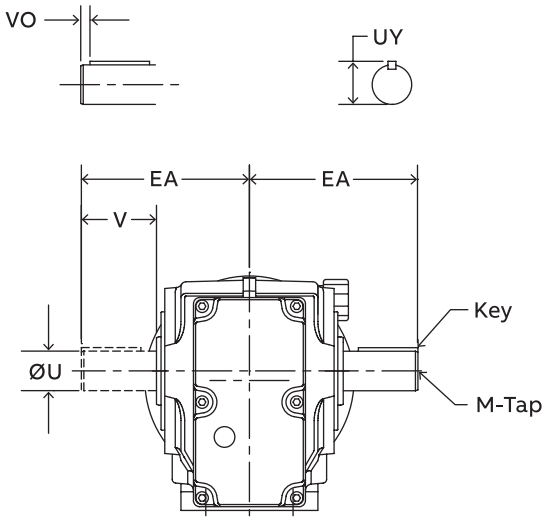

B14 Output flange

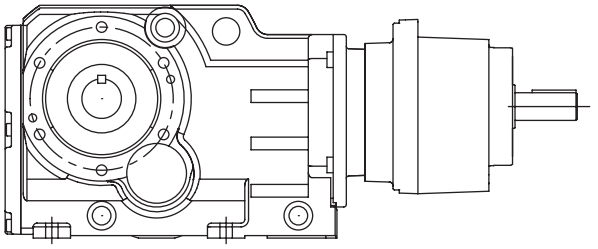

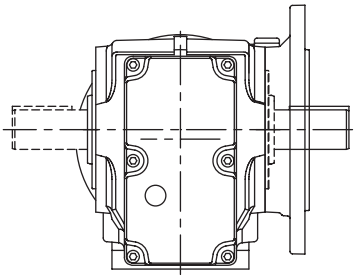

B5 Output flange

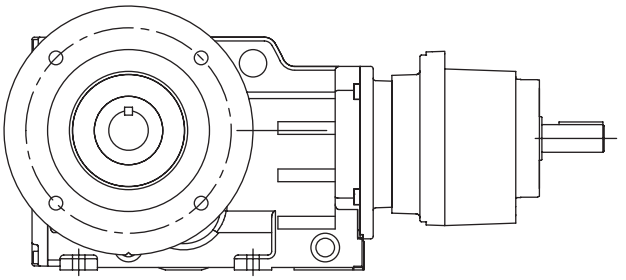

	Standard inch output shaft							Standard metric output shaft							
	Ø U	Tol.	UY	V	EA	Key	M-Tap	Ø U	Tol.	UY	V	VO	EA	Key	M-Tap
38	1.000	+0.0000 -0.0005	1.11	1.97	4.33	1/4 x 1/4 x 1-5/8	3/8-16 UNC X 0.87	25	+0.015 +0.002	28	50	5	110	8 x 7 x 40	M10 x 22
48	1.250	+0.0000 -0.0005	1.37	2.36	5.31	1/4 x 1/4 x 1-7/8	3/8-16 UNC X 0.87	30	+0.015 +0.002	33	60	4	135	8 x 7 x 50	M10 x 22
58	1.375	+0.0000 -0.0005	1.49	2.76	5.99	5/16 x 5/16 x 2-1/8	1/2-13 UNC x 1.12	35	+0.014 +0.002	38	70	7	152	10 x 8 x 56	M12 x 28
68	1.625	+0.0000 -0.0010	1.80	3.15	6.69	3/8 x 3/8 x 2-5/8	5/8-11 UNC X 1.42	40	+0.018 +0.002	43	80	5	170	12 x 8 x 70	M16 x 36
88	2.000	+0.0000 -0.0010	2.22	3.94	8.07	1/2 x 1/2 x 3-1/4	3/4-10 UNC X 1.65	50	+0.030 +0.011	54	100	10	205	14 x 9 x 80	M16 x 36
108	2.375	+0.0000 -0.0010	2.65	4.72	9.45	5/8 x 5/8 x 3-11/16	3/4-10 UNC X 1.65	60	+0.030 +0.011	64	120	5	240	18 x 11 x 100	M20 x 42
128	2.875	+0.0000 -0.0010	3.21	5.51	11.42	3/4 x 3/4 x 4	3/4-10 UNC X 1.65	70	+0.035 +0.013	75	140	8	290	20 x 12 x 125	M20 x 42
148	3.625	+0.0000 -0.0010	4.01	6.69	13.58	7/8 x 7/8 x 5-1/4	1-8 UNC X 1.97	90	+0.035 +0.013	95	170	15	345	25 x 14 x 140	M24 x 50
168	4.375	+0.0000 -0.0010	4.82	8.27	16.34	1 x 1 x 6-5/8	1-8 UNC X 1.97	110	+0.035 +0.013	116	210	15	415	28 x 16 x 180	M24 x 50

See page RHB-204 for optional solid shaft dimensions

Gearcase dimensions

Separate – flange mounted – solid shaft

Triple reduction

BF_3SI_
BF_3SM_

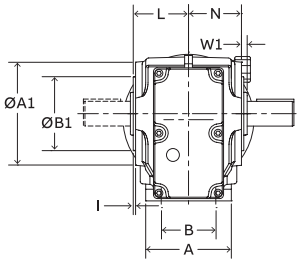

B14 Output flange

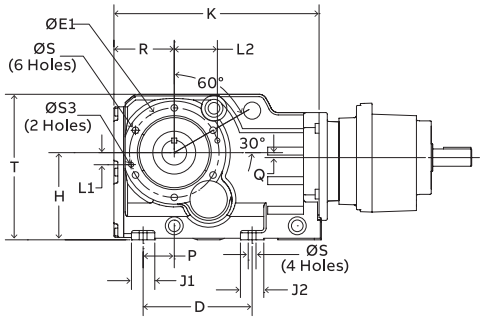

B14 Output flange
Sizes 38-128

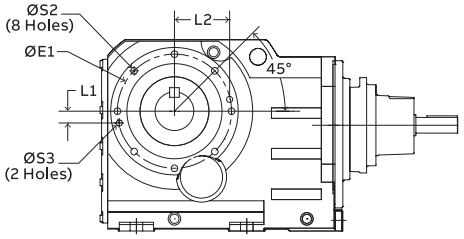

B14 Output flange
Sizes 148-168

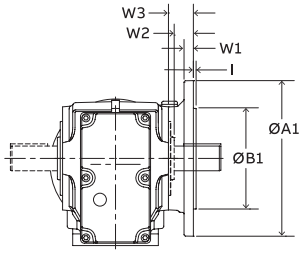

B5 Output flange

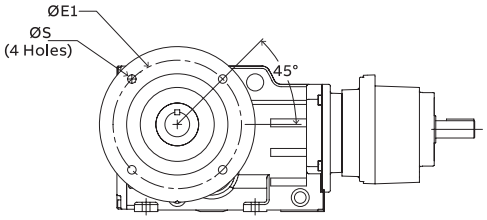

B5 Output flange
Sizes 38-108

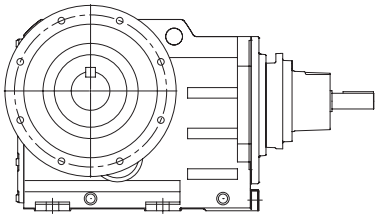

B5 Output flange
Sizes 128-168

	Mounting dimensions				Outline dimensions									
	B	D	H	Ø S	A	K	L	N	P	Q	R	T	J1	J2
38	2.36	4.61	3.94	M10 X 0.67	3.94	9.21	2.36	2.24	1.38	0.37	2.76	6.58	1.26	1.26
48	2.76	5.51	4.41	M10 X 0.66	4.33	10.37	2.80	2.68	1.58	0.43	3.05	7.36	1.18	1.18
58	3.46	5.98	5.20	M12 x 0.93	5.20	11.48	3.15	2.99	1.85	0.39	3.33	8.63	2.06	2.08
68	3.46	5.98	5.51	M12 X 0.93	5.51	12.15	3.39	3.25	1.65	0.26	3.48	9.09	1.97	1.97
88	4.53	6.69	7.09	M16 X 1.10	6.69	14.64	3.80	3.94	1.89	0.79	4.33	11.61	2.17	2.17
108	6.57	8.86	8.35	M16 X 1.10	8.27	18.24	4.53	4.37	2.56	0.51	5.33	13.58	2.76	2.76
128	8.39	9.76	10.43	M20 X 1.33	10.04	20.77	5.71	5.55	3.27	0.79	6.16	16.65	3.15	3.15
148	8.27	11.42	12.40	M24 X 1.61	11.26	24.31	6.65	6.46	3.94	1.46	7.71	19.80	3.54	3.54
168	9.45	13.78	14.76	M30 x 1.57	12.76	28.29	7.84	7.64	4.53	1.97	8.68	23.62	4.33	4.33

	B14 mounting dimensions									B5 mounting dimensions							
	Ø A1	Ø B1	Ø E1	Ø S2	I	W1	Ø S3	L1	L2	Ø A1	Ø B1	Ø E1	Ø S2	I	W1	W2	W3
38	4.72	3.1497	3.94	M8 X 0.55	0.12	0.24	–	–	–	6.30	4.3308	5.12	0.35	0.14	0.39	0.95	1.18
48	5.20	3.7402	4.53	M10 X 0.66	0.12	0.29	–	–	–	7.87	5.1182	6.50	0.43	0.14	0.47	0.97	1.26
58	5.91	4.3308	5.12	M12 X 0.82	0.16	0.28	–	–	–	9.84	7.0867	8.47	0.53	0.16	0.59	0.90	1.20
68	5.91	4.3308	5.12	M12 X 0.82	0.14	0.30	–	–	–	9.84	7.0867	8.47	0.53	0.16	0.59	0.90	1.20
88	7.48	5.1182	6.50	M12 X 0.82	0.14	0.34	–	–	–	11.81	9.0552	10.43	0.53	0.16	0.63	1.46	1.79
108	9.65	7.0867	8.47	M16 X 1.10	0.16	0.35	0.47	1.10	4.06	13.78	9.8419	11.81	0.69	0.20	0.71	1.42	1.77
128	11.61	9.0552	10.43	M16 X 1.10	0.16	0.35	0.47	1.69	4.92	17.71	13.7788	15.75	0.69	0.20	0.87	1.63	1.99
148	13.19	9.8419	11.81	M20 X 1.33	0.20	0.43	0.63	1.22	5.71	17.71	13.7788	15.75	0.69	0.20	0.87	1.61	2.05
168	15.75	11.8104	13.78	M20 X 1.33	0.20	0.43	0.63	1.46	3.73	21.65	17.7157	19.69	0.69	0.20	0.98	2.01	2.44

Separate input shaft dimensions

Separate – flange mounted – solid shaft

Triple reduction

BF_3SI_
BF_3SM_

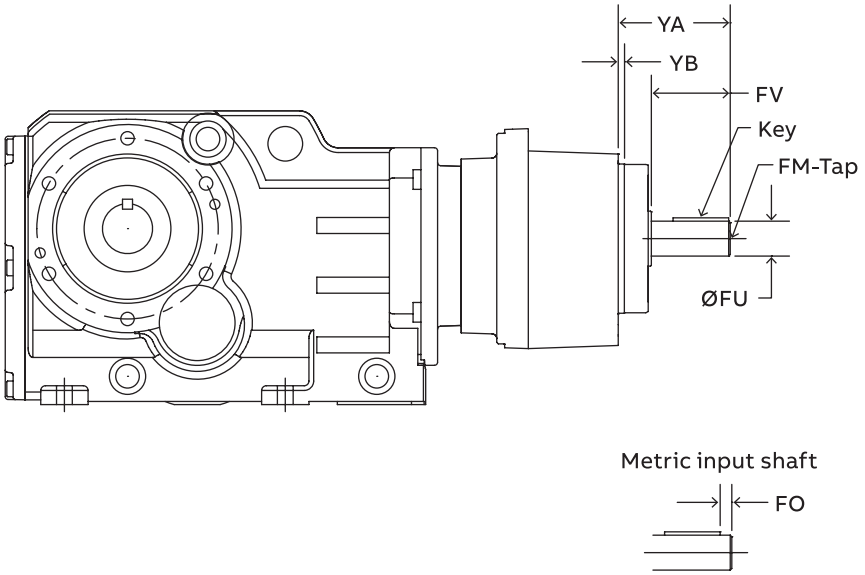

	Separate input mounting dimensions							
	Ø FU	Tol	FO	FV	YA	YB	FM x Depth	Key
71	0.625	+0.0000 -0.0005	–	1.57	2.40	0.16	8-32 UNC x 0.49	3/16 x 3/16 x 1-5/16
	16	+0.012 +0.001	4	40			M5 x 12.5	5 x 5 x 32
80	0.750	+0.0000 -0.0005	–	1.57	2.40	0.16	1/4-20 UNC x 0.63	3/16 x 3/16 x1-5/16
	19	+0.015 +0.002	4	10			M6 x 16	6 x 6 x 32
90	0.875	+0.0000 -0.0005	–	1.97	2.80	0.16	5/16-18 UNC x 0.75	3/16 x 3/16 x 1-5/8
	24	+0.015 +0.002	5	50			M8 x 19	8 x 7 x 40
100	1.125	+0.0000 -0.0005	–	2.36	3.27	0.16	3/8-16 UNC x 0.87	1/4 x 1/4 x 2
	28	+0.015 +0.002	5	60			M10 x 22	8 x 7 x 50
112	1.250	+0.0000 -0.0005	–	2.36	3.27	0.16	3/8-16 UNC x 0.87	1/4 x 1/4 x 2
	28	+0.015 +0.002	5	60			M10 x 22	8 x 7 x 50
132	1.375	+0.0000 -0.0005	–	3.15	6.61	0.14	3/8-16 UNC x 1.10	5/16 x 5/16 x 2-3/4
	38	+0.018 +0.002	5	80			M12 x 28	10 x 8 x 70
160	1.625	+0.0000 -0.0010	–	4.33	8.46	0.14	5/8-11 UNC x 1.42	3/8 x 3/8 x 3-1/2
	42	+0.018 +0.002	10	110			M16 x 36	12 x 8 x 90
180	2.125	+0.0000 -0.0010	–	4.33	9.25	0.20	3/4-10 UNC x 1.65	1/2 x 1/2 x 3-5/8
	55	+0.030 +0.011	10	110			M20 x 42	16 x 10 x 90
225	2.125	+0.0000 -0.0010	–	4.33	9.05	0.20	3/4-10 UNC x 1.65	1/2 x 1/2 x 3-5/8
	60	+0.030 +0.011	15	140			M20 x 42	18 x 11 x 110
250	2.375	+0.0000 -0.0010	–	5.51	10.20	0.20	3/4-10 UNC x 1.65	5/8 x 5/8 x 4-3/8
	65	+0.030 +0.011	15	140			M20 x 42	18 x 11 x 110

Separate input shaft dimensions

BF_3SI_
BF_3SM_

Separate – flange mounted – solid shaft

Triple reduction

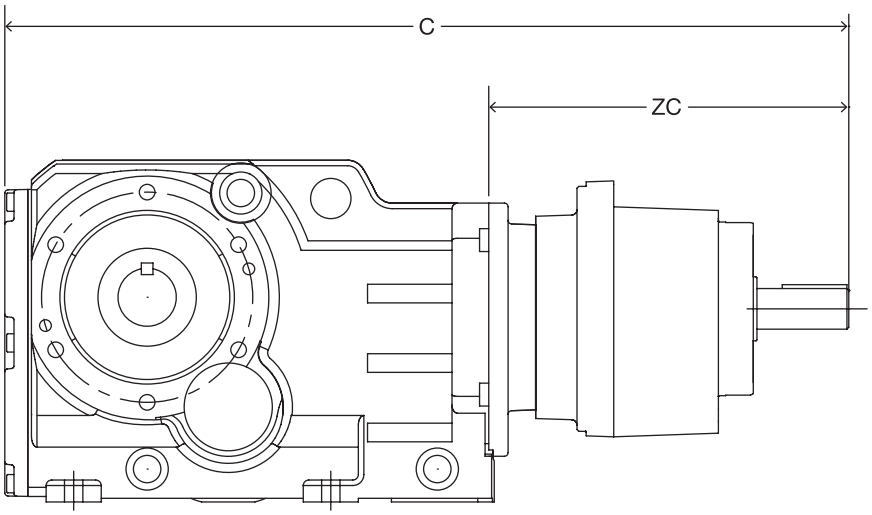

Inch separate input dimensions

Reducer size	Reducer stage	71		80		90		100		112		132		160		180		225		250	
		C	ZC	C	ZC	C	ZC	C	ZC	C	ZC	C	ZC	C	ZC	C	ZC	C	ZC	C	ZC
38	3	15.16	5.95	16.54	7.33	16.93	7.72	17.56	8.35	–	–	–	–	–	–	–	–	–	–	–	–
48	3	16.31	5.94	17.70	7.33	18.09	7.72	18.72	8.35	–	–	–	–	–	–	–	–	–	–	–	–
58	3	17.17	5.69	18.55	7.07	18.95	7.47	19.27	7.79	19.61	8.13	–	–	–	–	–	–	–	–	–	–
68	3	17.90	5.75	19.28	7.13	19.67	7.52	20.30	8.15	20.34	8.19	–	–	–	–	–	–	–	–	–	–
88	3	20.16	5.52	21.53	6.89	21.93	7.29	22.56	7.92	22.52	7.88	25.83	11.19	–	–	–	–	–	–	–	–
108	3	–	–	24.54	6.30	24.93	6.69	25.44	7.20	25.37	7.13	28.71	10.47	30.41	12.17	–	–	–	–	–	–
128	3	–	–	–	–	26.99	6.22	27.50	6.73	27.45	6.68	30.73	9.96	32.48	11.71	33.29	12.52	–	–	–	–
148	3	–	–	–	–	–	–	30.67	6.36	30.57	6.26	33.86	9.55	35.37	11.06	36.30	11.99	37.38	13.07	–	–
168	3	–	–	–	–	–	–	–	–	–	–	37.52	9.23	39.06	10.77	39.98	11.69	41.07	12.78	42.23	13.94

Metric separate input dimensions (dimensions in mm)

Reducer size	Reducer stage	71		80		90		100		112		132		160		180		225		250	
		C	ZC	C	ZC	C	ZC	C	ZC	C	ZC	C	ZC	C	ZC	C	ZC	C	ZC	C	ZC
38	3	385	151	420	186	430	196	446	212	–	–	–	–	–	–	–	–	–	–	–	–
48	3	415	151	450	186	460	196	476	212	–	–	–	–	–	–	–	–	–	–	–	–
58	3	436	145	471	180	481	190	489	198	498	207	–	–	–	–	–	–	–	–	–	–
68	3	454	146	489	181	499	191	515	207	516	208	–	–	–	–	–	–	–	–	–	–
88	3	512	140	547	175	557	185	573	201	572	200	656	284	–	–	–	–	–	–	–	–
108	3	–	–	623	160	633	170	647	183	645	181	729	266	773	309	–	–	–	–	–	–
128	3	–	–	–	–	686	158	699	171	697	170	781	253	825	298	846	318	–	–	–	–
148	3	–	–	–	–	–	–	780	162	777	159	861	243	899	281	923	305	980	362	–	–
168	3	–	–	–	–	–	–	–	–	–	–	953	235	992	274	1016	297	1073	355	1073	354

Output shaft dimensions

Separate – flange mounted – solid shaft
Four- and five-stage reduction

BF_4SI_
BF_4SM_
BF_5SI_
BF_5SM_

Metric output shaft

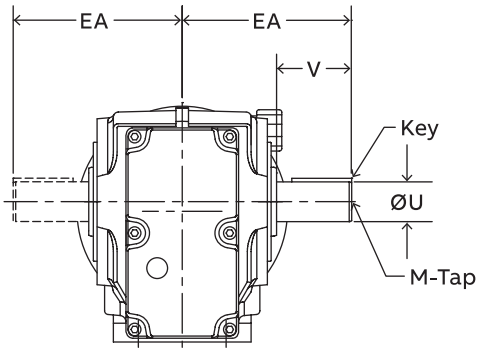

B14 Output flange

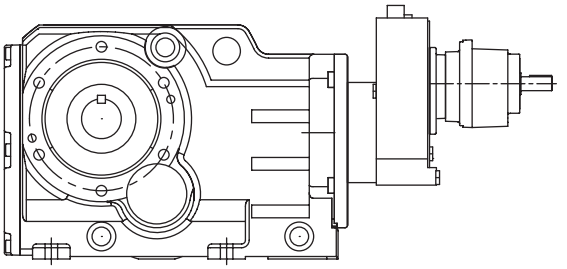

4 Stage reduction

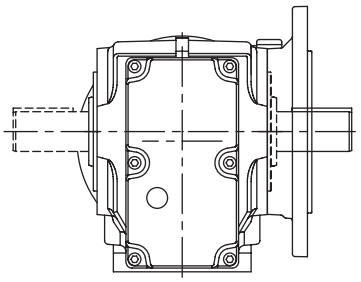

B5 Output flange

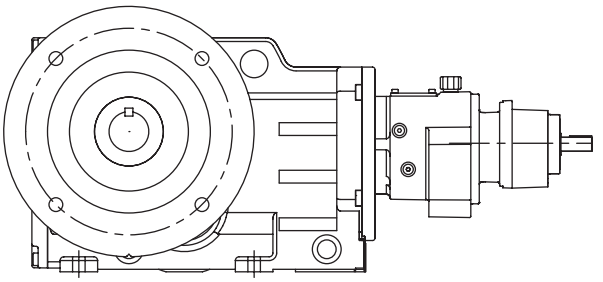

5 Stage reduction

	Standard inch output shaft							Standard metric output shaft							
	Ø U	Tol.	UY	V	EA	Key	M-Tap	Ø U	Tol.	UY	V	Vo	EA	Key	M-Tap
48	1.250	+0.0000 0.0005	1.37	2.36	5.31	1/4 x 1/4 x 1-7/8	3/8-16 UNC X 0.87	30	+0.015 +0.002	33	60	4	135	8 x 7 x 50	M10 x 22
68	1.625	+0.0000 -0.0010	1.80	3.15	6.69	3/8 x 3/8 x 2-5/8	5/8-11 UNC X 1.42	40	+0.018 +0.002	43	80	5	170	12 x 8 x 70	M16 x 36
88	2.000	+0.0000 -0.0010	2.22	3.94	8.07	1/2 x 1/2 x 3-1/4	3/4-10 UNC X 1.65	50	+0.030 +0.011	54	100	10	205	14 x 9 x 80	M16 x 36
108	2.375	+0.0000 -0.0010	2.65	4.72	9.45	5/8 x 5/8 x 3-11/16	3/4-10 UNC X 1.65	60	+0.030 +0.011	64	120	5	240	18 x 11 x 100	M20 x 42
128	2.875	+0.0000 -0.0010	3.21	5.51	11.42	3/4 x 3/4 x 4	3/4-10 UNC X 1.65	70	+0.035 +0.013	75	140	8	290	20 x 12 x 125	M20 x 42
148	3.625	+0.0000 -0.0010	4.01	6.69	13.58	7/8 x 7/8 x 5-1/4	1-8 UNC X 1.97	90	+0.035 +0.013	95	170	15	345	25 x 14 x 140	M24 x 50
168	4.375	+0.0000 -0.0010	4.82	8.27	16.34	1 x 1 x 6-5/8	1-8 UNC X 1.97	110	+0.035 +0.013	116	210	15	415	28 x 16 x 180	M24 x 50

See page RHB-204 for optional solid shaft dimensions

Gearcase dimensions

Separate – flange mounted – solid shaft

Four- and five-stage reduction

BF_4SI_
BF_4SM_
BF_5SI_
BF_5SM_

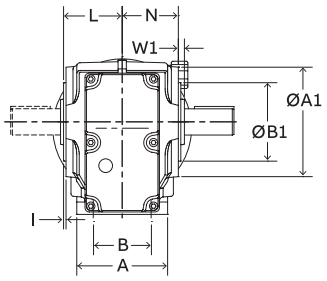

B14 Output flange
Sizes 38-168

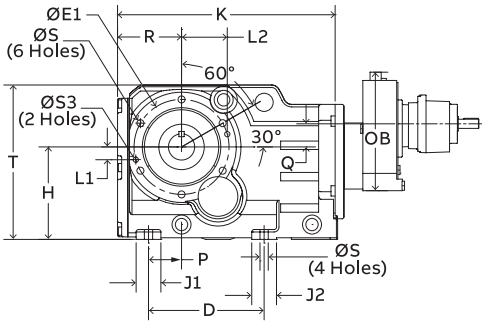

B14 Output flange
Sizes 38-128
4 Stage reduction

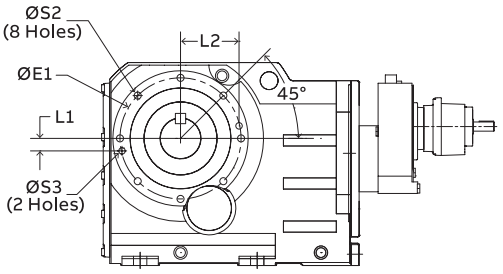

B14 Output flange
Sizes 148-168

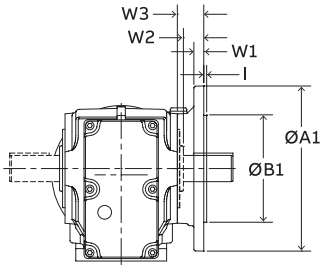

B5 Output flange
Sizes 38-168

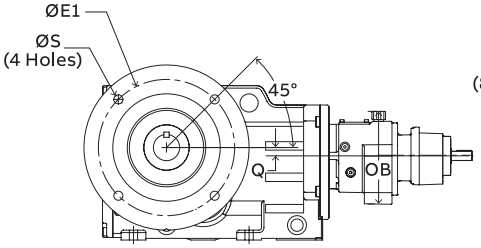

B5 Output flange
Sizes 38-108
5 Stage reduction

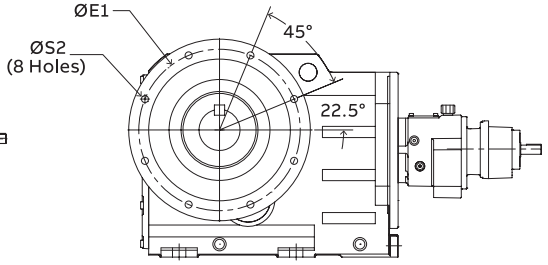

B5 Output flange
Sizes 128-168

	Mounting dimensions				Outline dimensions									4 stage		5 stage	
	B	D	H	Ø S	A	K	L	N	P	R	T	J1	J2	Q	OB	Q	OB
48	2.76	5.51	4.41	M10 X 0.66	4.33	10.37	2.80	2.68	1.58	3.05	7.36	1.18	1.18	1.50	7.83	0.43	6.26
68	3.46	5.98	5.51	M12 X 0.93	5.51	12.15	3.39	3.25	1.65	3.48	9.09	1.97	1.97	1.67	7.83	0.26	6.29
88	4.53	6.69	7.09	M16 X 1.10	6.69	14.64	3.80	3.94	1.89	4.33	11.61	2.17	2.17	1.14	7.83	0.79	6.29
108	6.57	8.86	8.35	M16 X 1.10	8.27	18.24	4.53	4.37	2.56	5.33	13.58	2.76	2.76	2.03	9.84	0.51	8.86
128	8.39	9.76	10.43	M20 X 1.33	10.04	20.77	5.71	5.55	3.27	6.16	16.65	3.15	3.15	1.77	9.84	0.79	8.86
148	8.27	11.42	12.40	M24 X 1.61	11.26	24.31	6.65	6.46	3.94	7.71	19.80	3.54	3.54	1.61	11.57	1.46	8.86
168	9.45	13.78	14.76	M30 x 1.57	12.76	28.29	7.84	7.64	4.53	8.68	23.62	4.33	4.33	1.10	11.57	1.97	10.68

	B14 mounting dimensions									B5 mounting dimensions							
	Ø A1	Ø B1	Ø E1	Ø S2	I	W1	Ø S3	L1	L2	Ø A1	Ø B1	Ø E1	Ø S2	I	W1	W2	W3
48	5.20	3.7402	4.53	M10 X 0.66	0.12	0.29	–	–	–	7.87	5.1182	6.50	0.43	0.14	0.47	0.97	1.26
68	5.91	4.3308	5.12	M12 X 0.82	0.14	0.30	–	–	–	9.84	7.0867	8.47	0.53	0.16	0.30	0.59	1.20
88	7.48	5.1182	6.50	M12 X 0.82	0.14	0.34	–	–	–	11.81	9.0552	10.43	0.53	0.16	0.63	1.46	1.79
108	9.65	7.0867	8.47	M16 X 1.10	0.16	0.35	0.47	1.10	4.06	13.78	9.8419	11.81	0.69	0.20	0.71	1.42	1.77
128	11.61	9.0552	10.43	M16 X 1.10	0.16	0.35	0.47	1.69	4.92	17.71	13.7788	15.75	0.69	0.20	0.87	1.63	1.99
148	13.19	9.8419	11.81	M20 X 1.33	0.20	0.43	0.63	1.22	5.71	17.71	13.7788	15.75	0.69	0.20	0.87	1.61	2.05
168	15.75	11.8104	13.78	M20 X 1.33	0.20	0.43	0.63	1.46	3.73	21.65	17.7157	19.69	0.69	0.20	0.98	2.01	2.44

Separate input shaft dimensions

Separate – flange mounted – solid shaft

Four- and five-stage reduction

BF_4SI_
BF_4SM_
BF_5SI_
BF_5SM_

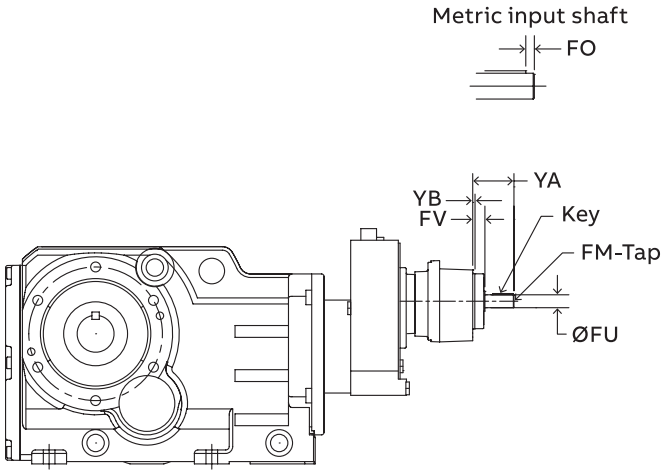

4 Stage reduction

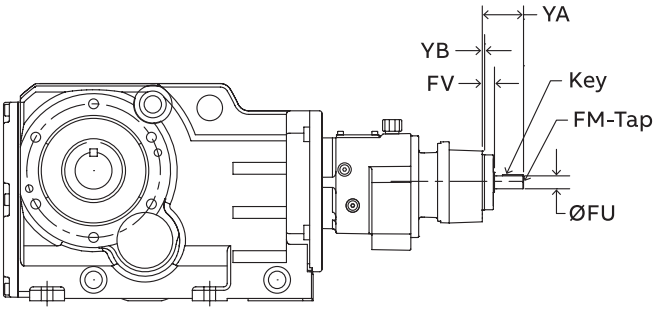

5 Stage reduction

	Separate input mounting dimensions							
	Ø FU	Tol	FO	FV	YA	YB	FM x Depth	Key
71	0.625	+0.0000 -0.0005	–	1.57	2.40	0.16	8-32 UNC x 0.49	3/16 x 3/16 x 1-5/16
	16	+0.012 +0.001	4	40			M5 x 12.5	5 x 5 x 32
80	0.750	+0.0000 -0.0005	–	1.57	2.40	0.16	1/4-20 UNC x 0.63	3/16 x 3/16 x1-5/16
	19	+0.015 +0.002	4	10			M6 x 16	6 x 6 x 32
90	0.875	+0.0000 -0.0005	–	1.97	2.80	0.16	5/16-18 UNC x 0.75	3/16 x 3/16 x 1-5/8
	24	+0.015 +0.002	5	50			M8 x 19	8 x 7 x 40
100	1.125	+0.0000 -0.0005	–	2.36	3.27	0.16	3/8-16 UNC x 0.87	1/4 x 1/4 x 2
	28	+0.015 +0.002	5	60			M10 x 22	8 x 7 x 50
112	1.250	+0.0000 -0.0005	–	2.36	3.27	0.16	3/8-16 UNC x 0.87	1/4 x 1/4 x 2
	28	+0.015 +0.002	5	60			M10 x 22	8 x 7 x 50
132	1.375	+0.0000 -0.0005	–	3.15	6.61	0.14	3/8-16 UNC x 1.10	5/16 x 5/16 x 2-3/4
	38	+0.018 +0.002	5	80			M12 x 28	10 x 8 x 70

Separate input shaft dimensions

Separate – flange mounted – solid shaft

Four- and five-stage reduction

BF_4SI_
BF_4SM_
BF_5SI_
BF_5SM_

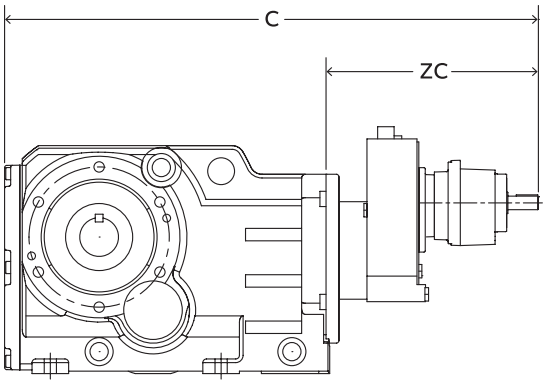

4 Stage reduction

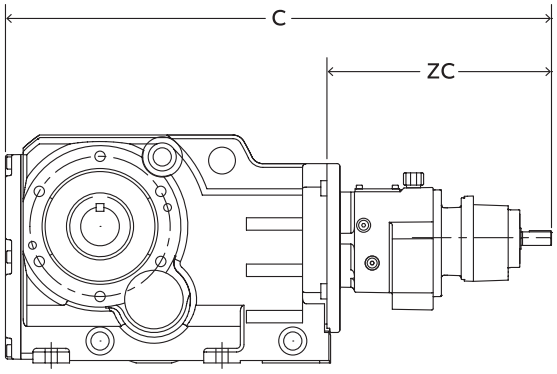

5 Stage reduction

Inch separate input dimensions

Reducer size	Reducer stage	71		80		90		100		112		132	
		C	ZC	C	ZC	C	ZC	C	ZC	C	ZC	C	ZC
48	4	21.32	10.95	22.62	12.25	23.02	12.65	23.72	13.35	–	–	–	–
	5	22.45	12.08	23.82	13.45	24.22	13.85	24.85	14.48	–	–	–	–
68	4	22.71	10.56	24.01	11.86	24.41	12.26	25.11	12.96	–	–	–	–
	5	23.84	11.69	25.21	13.06	25.61	13.46	26.24	14.09	–	–	–	–
88	4	25.14	10.50	26.44	11.80	26.84	12.20	27.54	12.90	–	–	–	–
	5	26.27	11.63	27.64	13.00	28.04	13.40	28.67	14.03	–	–	–	–
108	4	28.56	10.32	29.86	11.62	30.26	12.02	30.96	12.72	30.96	12.72	–	–
	5	30.90	12.66	32.28	14.04	32.67	14.43	33.30	15.06	33.34	15.10	–	–
128	4	31.27	10.64	32.57	11.94	32.97	12.34	33.67	13.04	33.67	13.04	–	–
	5	33.14	12.51	34.52	13.89	34.91	14.28	35.54	14.91	35.58	14.95	–	–
148	4	35.19	11.06	36.59	12.46	36.99	12.86	37.59	13.46	37.59	13.46	41.25	16.76
	5	36.43	12.30	37.81	13.68	38.20	14.07	38.83	14.70	38.87	14.74	–	–
168	4	39.20	10.91	40.60	12.31	41.00	12.71	41.60	13.31	41.60	13.31	44.90	16.61
	5	42.42	14.13	43.80	15.51	44.19	15.90	44.82	16.53	44.78	16.49	48.09	19.80

Metric separate input dimensions (dimensions in mm)

Reducer size	Reducer stage	71		80		90		100		112		132	
		C	ZC	C	ZC	C	ZC	C	ZC	C	ZC	C	ZC
48	4	542	278	575	311	585	321	603	339	–	–	–	–
	5	570	307	605	342	615	352	631	368	–	–	–	–
68	4	577	268	610	301	620	311	638	329	–	–	–	–
	5	606	297	640	332	650	342	666	358	–	–	–	–
88	4	639	267	672	300	682	310	699	328	–	–	–	–
	5	667	295	702	330	712	340	728	356	–	–	–	–
108	4	725	262	758	295	769	305	786	323	786	323	–	–
	5	785	322	820	357	830	367	846	383	847	384	–	–
128	4	794	270	827	303	837	313	855	331	855	331	–	–
	5	842	318	877	353	887	363	903	379	904	380	–	–
148	4	894	281	929	317	940	327	955	342	955	342	1048	426
	5	925	312	960	347	970	357	986	373	987	374	–	–
168	4	996	277	1031	313	1041	323	1057	338	1057	338	1140	422
	5	1077	359	1113	394	1122	404	1138	420	1137	419	1221	503

Output shaft dimensions

Integral – foot mounted – solid shaft
Triple reduction

Metric output shaft

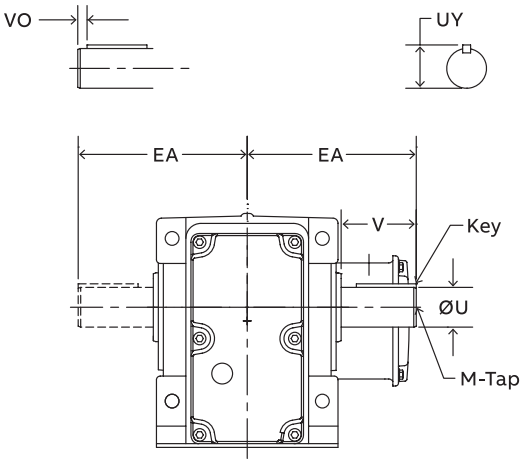

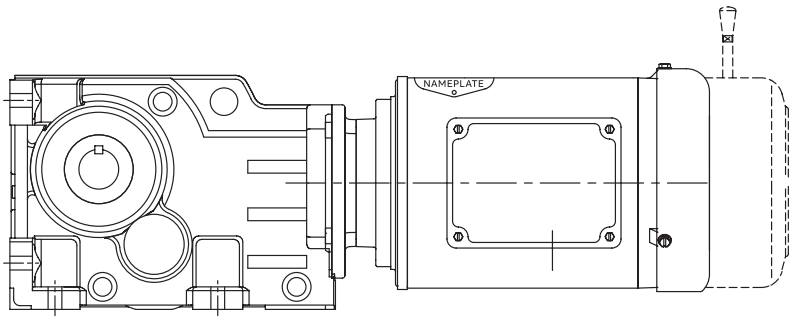

	Standard inch output shaft							Standard metric output shaft							
	Ø U	Tol.	UY	V	EA	Key	M-Tap	Ø U	Tol.	UY	V	VO	EA	Key	M-Tap
38	1.000	+0.0000 -0.0005	1.11	1.97	4.33	1/4 x 1/4 x 1-5/8	3/8-16 UNC X 0.87	25	+0.015 +0.002	28	50	5	110	8 x 7 x 40	M10 x 22
48	1.250	+0.0000 -0.0005	1.37	2.36	5.31	1/4 x 1/4 x 1-7/8	3/8-16 UNC X 0.87	30	+0.015 +0.002	33	60	4	135	8 x 7 x 50	M10 x 22
58	1.375	+0.0000 -0.0005	1.49	2.76	5.99	5/16 x 5/16 x 2-1/8	1/2-13 UNC x 1.12	35	+0.014 +0.002	38	70	7	152	10 x 8 x 56	M12 x 28
68	1.625	+0.0000 -0.0010	1.80	3.15	6.69	3/8 x 3/8 x 2-5/8	5/8-11 UNC X 1.42	40	+0.018 +0.002	43	80	5	170	12 x 8 x 70	M16 x 36
88	2.000	+0.0000 -0.0010	2.22	3.94	8.07	1/2 x 1/2 x 3-1/4	3/4-10 UNC X 1.65	50	+0.030 +0.011	54	100	10	205	14 x 9 x 80	M16 x 36
108	2.375	+0.0000 -0.0010	2.65	4.72	9.45	5/8 x 5/8 x 3-11/16	3/4-10 UNC X 1.65	60	+0.030 +0.011	64	120	5	240	18 x 11 x 100	M20 x 42
128	2.875	+0.0000 -0.0010	3.21	5.51	11.42	3/4 x 3/4 x 4	3/4-10 UNC X 1.65	70	+0.035 +0.013	75	140	8	290	20 x 12 x 125	M20 x 42
148	3.625	+0.0000 -0.0010	4.01	6.69	13.58	7/8 x 7/8 x 5-1/4	1-8 UNC X 1.97	90	+0.035 +0.013	95	170	15	345	25 x 14 x 140	M24 x 50
168	4.375	+0.0000 -0.0010	4.82	8.27	16.34	1 x 1 x 6-5/8	1-8 UNC X 1.97	110	+0.035 +0.013	116	210	15	415	28 x 16 x 180	M24 x 50

See page RHB-204 for optional solid shaft dimensions

Gearcase dimensions

BB_3GH_

Integral – foot mounted – solid shaft

Triple reduction

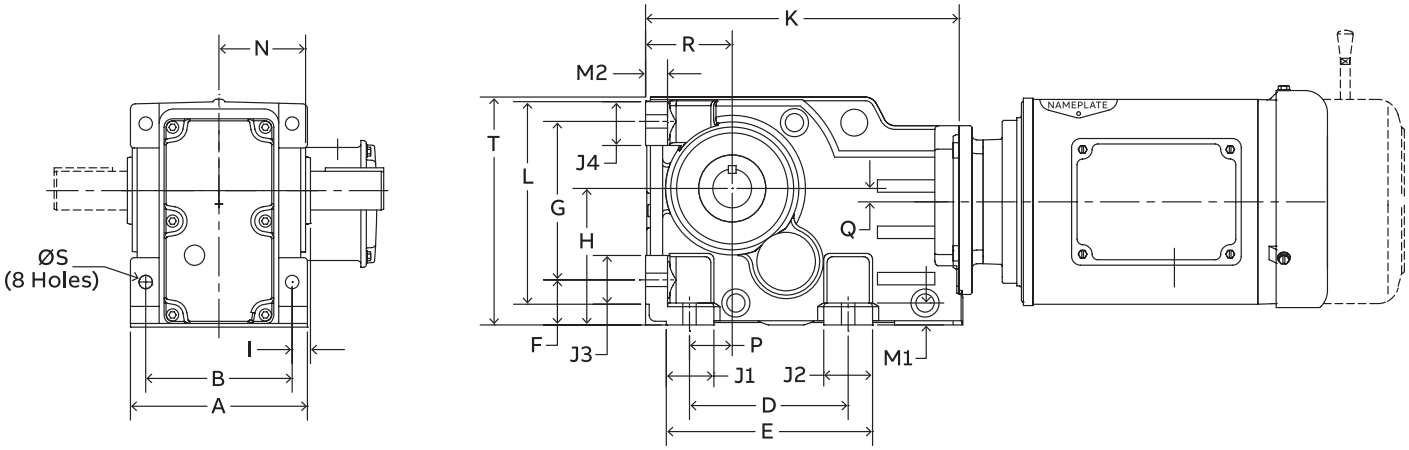

	Mounting dimensions								
	A	B	D	E	F	G	H	I	Ø S
38	4.72	3.94	4.33	5.55	1.26	4.53	3.94	0.39	0.43
48	5.71	4.72	5.12	6.65	1.45	5.12	4.41	0.59	0.43
58	6.30	5.12	5.12	6.78	1.77	5.91	5.20	0.72	0.53
68	6.69	5.51	4.72	6.69	1.77	6.30	5.51	0.79	0.53
88	7.87	6.50	5.91	8.07	2.17	7.87	7.09	0.89	0.71
108	9.06	7.09	7.09	10.04	2.76	9.17	8.35	1.18	0.87
128	11.42	9.45	9.45	12.60	2.95	11.61	10.43	1.18	1.02
148	13.39	10.63	11.02	15.20	3.74	14.17	12.40	1.58	1.30
168	15.75	12.99	13.78	18.11	4.33	16.54	14.76	1.58	1.54

	Outline dimensions												
	J1	J2	J3	J4	M1	M2	K	P	L	N	R	T	Q
38	1.38	1.26	1.30	1.22	0.63	0.63	8.94	1.10	5.79	2.28	2.48	6.58	0.37
48	1.54	1.58	1.58	1.42	0.71	0.71	10.12	1.38	6.54	2.80	2.80	7.36	0.43
58	1.68	1.68	1.96	1.79	0.81	0.73	11.3	1.18	7.72	3.15	3.15	8.58	0.39
68	1.97	1.97	1.97	1.89	0.87	0.87	12.21	1.18	8.19	3.39	3.54	9.09	0.26
88	2.17	2.17	2.17	2.56	0.98	0.98	14.72	1.58	10.31	3.94	4.41	11.61	0.79
108	2.76	3.15	2.76	2.91	1.18	1.18	18.11	2.17	12.09	4.53	5.20	13.58	0.51
128	3.15	3.15	3.15	3.54	1.38	1.38	20.91	2.95	15.09	5.71	6.30	16.65	0.79
148	3.54	4.17	3.54	3.50	1.58	1.58	24.49	3.74	17.67	6.65	7.87	19.80	1.46
168	4.33	4.33	4.33	4.33	1.77	1.77	28.47	4.53	20.87	7.84	8.86	23.62	1.97

Standard motor dimensions

Integral – foot mounted – solid shaft

Triple reduction

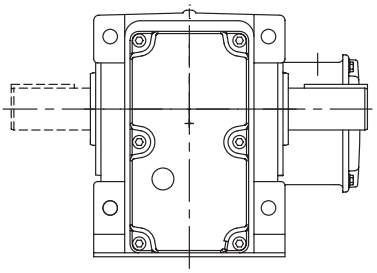

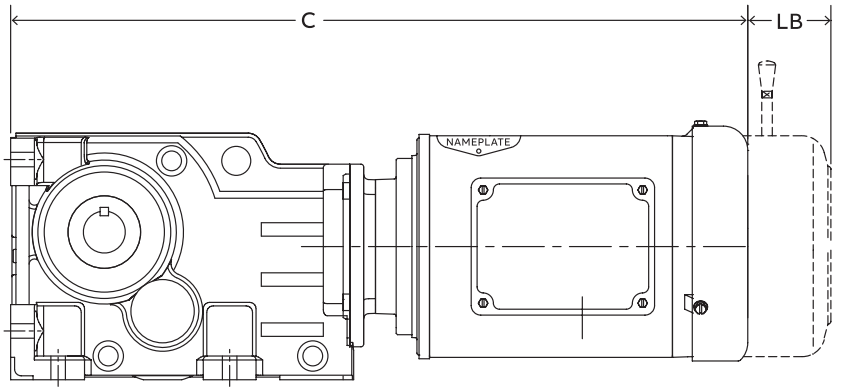

Standard integral motor dimensions 1/4 – 10 Hp

Reducer size	Reducer stage	71C4/71D4/71E4		80F4		80G4		90H4		90I4		100J4		112L4		132M4		132N4	
		C	LB	C	LB	C	LB	C	LB	C	LB	C	LB	C	LB	C	LB	C	LB
38	3	19.47	2.37	19.62	2.11	20.99	1.74	21.09	2.62	21.97	1.74	23.93	1.75	–	–	–	–	–	–
48	3	20.65	2.37	20.80	2.11	22.17	1.74	22.27	2.62	23.15	1.74	25.11	1.75	–	–	–	–	–	–
58	3	21.76	2.37	21.91	2.21	23.28	1.61	23.38	2.62	24.26	1.74	26.11	1.75	27.99	2.50	–	–	–	–
68	3	22.53	2.37	22.68	2.11	24.05	1.74	24.15	2.62	25.03	1.74	26.99	1.75	28.75	2.51	–	–	–	–
88	3	24.80	2.37	24.95	2.11	26.32	1.74	26.42	2.62	27.30	1.74	29.26	1.75	30.95	2.51	32.47	6.38	33.97	6.38
108	3	–	–	27.75	2.11	29.12	1.74	29.22	2.62	30.10	1.74	31.96	1.75	33.61	2.51	35.13	6.38	36.63	6.38
128	3	–	–	–	–	–	–	31.57	2.62	32.45	1.74	34.29	1.75	35.96	2.51	37.44	6.38	38.94	6.38
148	3	–	–	–	–	–	–	–	–	–	–	37.50	1.75	39.12	2.51	40.60	6.38	42.10	6.38
168	3	–	–	–	–	–	–	–	–	–	–	–	–	–	–	44.27	6.38	45.77	6.38

Standard integral motor dimensions 15 – 40 Hp

Reducer size	Reducer stage	160P4		160Q4		180R4		180S4	200T4
		C	LB	C	LB	C	LB	C	C
108	3	38.99	7.02	38.99	7.02	–	–	–	–
128	3	41.34	7.02	41.34	7.02	45.85	5.71	47.60	49.10
148	3	44.27	7.02	44.27	7.02	48.90	5.71	50.65	52.15
168	3	47.96	7.02	47.96	7.02	52.58	5.71	54.33	55.83

See page ENG-20 for additional integral gearmotor information

Washdown motor dimensions

BB_3GH_

Integral – foot mounted – solid shaft
Triple reduction

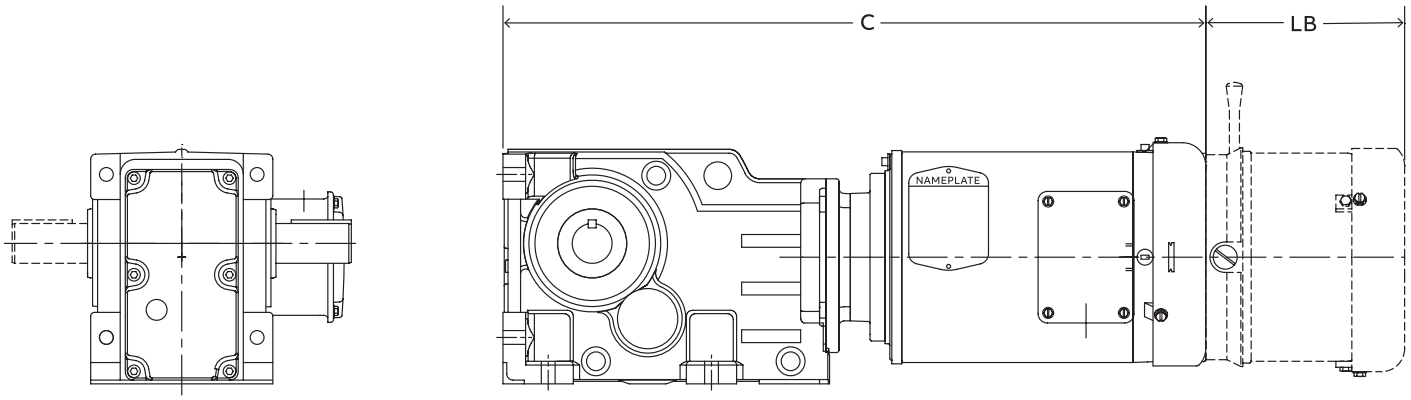

Washdown integral motor dimensions 1/2 – 10 Hp

Reducer size	Reducer stage	71E4		80F4		80G4		90H4		90I4		100J4		112L4		132M4		132N4	
		C	LB	C	LB	C	LB	C	LB	C	LB	C	LB	C	LB	C	LB	C	LB
38	3	20.36	4.81	20.26	4.81	21.26	3.81	21.36	5.26	22.24	5.26	25.59	6.24	–	–	–	–	–	–
48	3	21.52	4.81	21.42	4.81	22.42	3.81	22.52	5.26	23.40	5.26	26.75	6.24	–	–	–	–	–	–
58	3	22.38	4.81	22.38	4.81	23.28	3.81	23.38	5.26	24.26	5.26	27.50	6.24	27.99		–	–	–	–
68	3	23.09	4.81	22.99	4.81	23.99	3.81	24.09	5.26	24.97	5.26	28.32	6.24	28.69	5.26	–	–	–	–
88	3	25.34	4.81	25.24	4.81	26.24	3.81	26.34	5.26	27.22	5.26	30.57	6.24	30.87	5.26	32.39	8.44	33.89	8.94
108	3	–	–	28.25	4.81	29.25	3.81	29.35	5.26	30.23	5.26	33.48	6.24	33.74	5.26	35.26	8.44	36.76	8.94
128	3	–	–	–	–	–	–	31.43	5.26	32.31	5.26	35.54	6.24	35.82	5.26	37.30	8.44	38.80	8.94
148	3	–	–	–	–	–	–	–	–	–	–	38.71	6.24	38.94	5.26	40.42	8.44	41.92	8.94
168	3	–	–	–	–	–	–	–	–	–	–	–	–	–	–	44.09	8.44	45.59	8.94

See page ENG-20 for additional integral gearmotor information

Output shaft dimensions

Integral – foot mounted – solid shaft

Four- and five-stage reduction

BB_4GH_
BB_5GH_

Metric output shaft

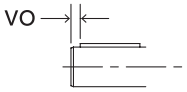

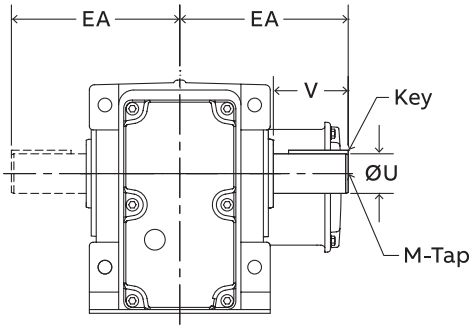

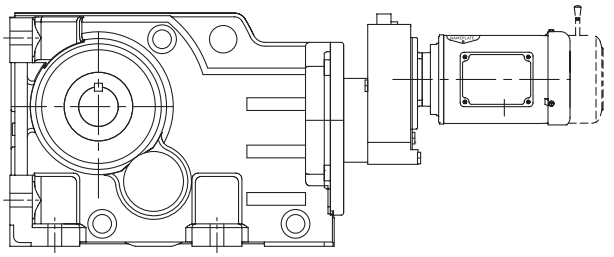

4 Stage reduction

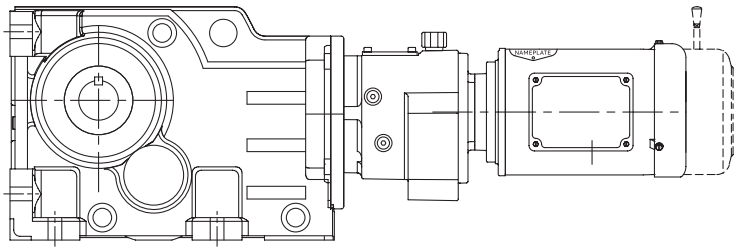

5 Stage reduction

	Standard inch output shaft							Standard metric output shaft							
	Ø U	Tol.	UY	V	EA	Key	M-Tap	Ø U	Tol.	UY	V	Vo	EA	Key	M-Tap
48	1.250	+0.0000 0.0005	1.37	2.36	5.31	1/4 x 1/4 x 1-7/8	3/8-16 UNC X 0.87	30	+0.015 +0.002	33	60	4	135	8 x 7 x 50	M10 x 22
68	1.625	+0.0000 -0.0010	1.80	3.15	6.69	3/8 x 3/8 x 2-5/8	5/8-11 UNC X 1.42	40	+0.018 +0.002	43	80	5	170	12 x 8 x 70	M16 x 36
88	2.000	+0.0000 -0.0010	2.22	3.94	8.07	1/2 x 1/2 x 3-1/4	3/4-10 UNC X 1.65	50	+0.030 +0.011	54	100	10	205	14 x 9 x 80	M16 x 36
108	2.375	+0.0000 -0.0010	2.65	4.72	9.45	5/8 x 5/8 x 3-11/16	3/4-10 UNC X 1.65	60	+0.030 +0.011	64	120	5	240	18 x 11 x 100	M20 x 42
128	2.875	+0.0000 -0.0010	3.21	5.51	11.42	3/4 x 3/4 x 4	3/4-10 UNC X 1.65	70	+0.035 +0.013	75	140	8	290	20 x 12 x 125	M20 x 42
148	3.625	+0.0000 -0.0010	4.01	6.69	13.58	7/8 x 7/8 x 5-1/4	1-8 UNC X 1.97	90	+0.035 +0.013	95	170	15	345	25 x 14 x 140	M24 x 50
168	4.375	+0.0000 -0.0010	4.82	8.27	16.34	1 x 1 x 6-5/8	1-8 UNC X 1.97	110	+0.035 +0.013	116	210	15	415	28 x 16 x 180	M24 x 50

See page RHB-204 for optional solid shaft dimensions

Gearcase dimensions

Integral – foot mounted – solid shaft

Four- and five-stage reduction

BB_4GH_
BB_5GH_

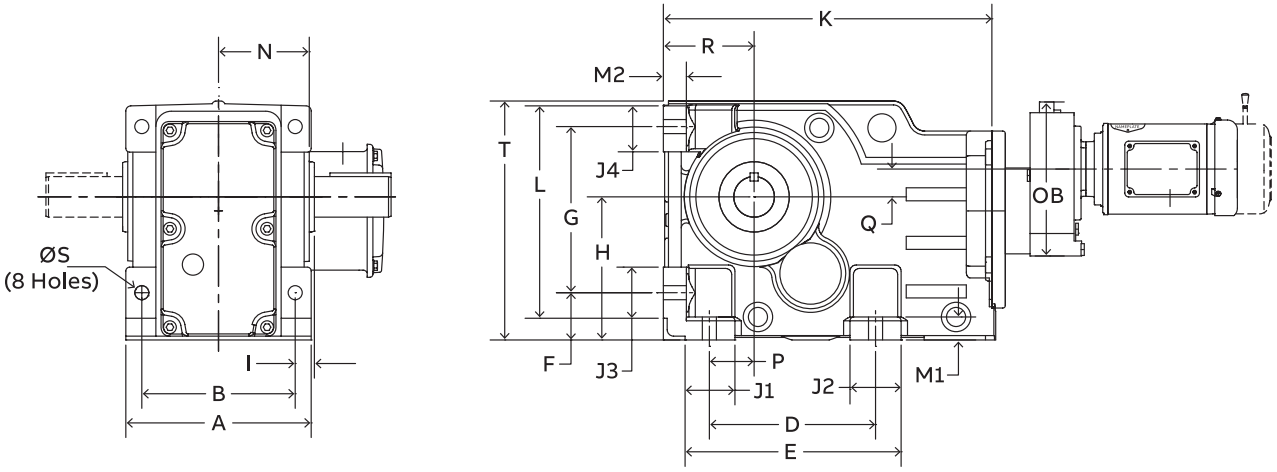

4 Stage reduction

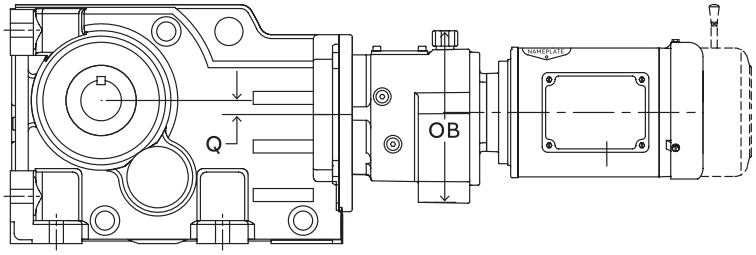

5 Stage reduction

	Mounting dimensions								
	A	B	D	E	F	G	H	I	ØS
48	5.71	4.72	5.12	6.65	1.45	5.12	4.41	0.59	0.43
68	6.69	5.51	4.72	6.69	1.77	6.30	5.51	0.79	0.53
88	7.87	6.50	5.91	8.07	2.17	7.87	7.09	0.89	0.71
108	9.06	7.09	7.09	10.04	2.76	9.17	8.35	1.18	0.87
128	11.42	9.45	9.45	12.60	2.95	11.61	10.43	1.18	1.02
148	13.39	10.63	11.02	15.20	3.74	14.17	12.40	1.58	1.30
168	15.75	12.99	13.78	18.11	4.33	16.54	14.76	1.58	1.54

	Outline dimensions												4 stage		5 stage	
	J1	J2	J3	J4	M1	M2	K	P	L	N	R	T	Q	OB	Q	OB
48	1.54	1.58	1.58	1.42	0.71	0.71	10.12	1.38	6.54	2.80	2.80	7.36	1.50	7.83	0.43	6.26
68	1.97	1.97	1.97	1.89	0.87	0.87	12.21	1.18	8.19	3.39	3.54	9.09	1.67	7.83	0.26	6.29
88	2.17	2.17	2.17	2.56	0.98	0.98	14.72	1.58	10.31	3.94	4.41	11.61	1.14	7.83	0.79	6.29
108	2.76	3.15	2.76	2.91	1.18	1.18	18.11	2.17	12.09	4.53	5.20	13.58	2.03	9.84	0.51	8.86
128	3.15	3.15	3.15	3.54	1.38	1.38	20.91	2.95	15.09	5.71	6.30	16.65	1.77	9.84	0.79	8.86
148	3.54	4.17	3.54	3.50	1.58	1.58	24.49	3.74	17.67	6.65	7.87	19.80	1.61	11.57	1.46	8.86
168	4.33	4.33	4.33	4.33	1.77	1.77	28.47	4.53	20.87	7.84	8.86	23.62	1.10	11.57	1.97	10.68

Standard motor dimensions

Integral – foot mounted – solid shaft

Four- and five-stage reduction

BB_4GH_
BB_5GH_

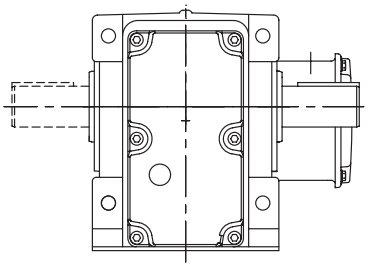

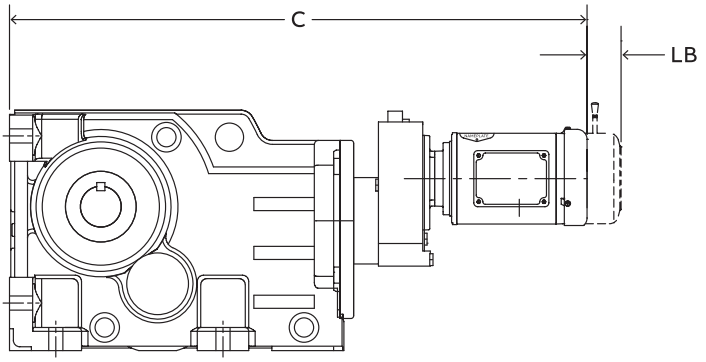

4 Stage reduction

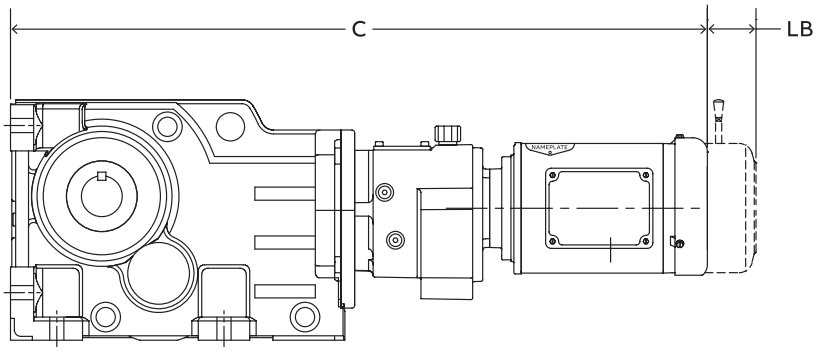

5 Stage reduction

Standard integral motor dimensions 1/4 – 10 Hp

Reducer size	Reducer stage	71C4/71D4/71E4		80F4		80G4		90H4		90I4		100J4		112L4		132M4		132N4	
		C	LB	C	LB	C	LB	C	LB	C	LB	C	LB	C	LB	C	LB	C	LB
48	4	25.61	2.37	25.76	2.11	–	–	–	–	–	–	–	–	–	–	–	–	–	–
	5	26.75	2.37	–	–	–	–	–	–	–	–	–	–	–	–	–	–	–	–
68	4	27.01	2.37	27.16	2.11	28.53	1.74	–	–	–	–	–	–	–	–	–	–	–	–
	5	28.15	2.37	–	–	–	–	–	–	–	–	–	–	–	–	–	–	–	–
88	4	29.32	2.37	29.47	2.11	30.84	1.74	30.94	2.62	–	–	–	–	–	–	–	–	–	–
	5	30.46	2.37	–	–	–	–	–	–	–	–	–	–	–	–	–	–	–	–
108	4	32.72	2.37	32.87	2.11	34.24	1.74	34.34	2.62	35.22	1.74	37.18	1.75	–	–	–	–	–	–
	5	35.04	2.37	–	–	–	–	–	–	–	–	–	–	–	–	–	–	–	–
128	4	35.52	2.37	35.67	2.11	37.04	1.74	37.14	2.62	38.02	1.74	39.98	1.75	41.74	2.51	–	–	–	–
	5	37.84	2.37	–	–	–	–	–	–	–	–	–	–	–	–	–	–	–	–
148	4	40.14	2.37	40.29	2.11	41.66	1.74	41.76	2.62	42.64	1.74	44.60	1.75	46.29	2.51	–	–	–	–
	5	41.36	2.37	41.51	2.11	–	–	–	–	–	–	–	–	–	–	–	–	–	–
168	4	43.96	2.37	44.11	2.11	45.48	1.74	45.58	2.62	46.46	1.74	48.42	1.75	50.11	2.51	51.63	6.38	–	–
	5	44.58	2.37	44.48	2.11	45.48	1.74	45.58	2.62	–	–	–	–	–	–	–	–	–	–

See page ENG-20 for additional integral gearmotor information

Washdown motor dimensions

Integral – foot mounted – solid shaft

Four- and five-stage reduction

BB_4GH_
BB_5GH_

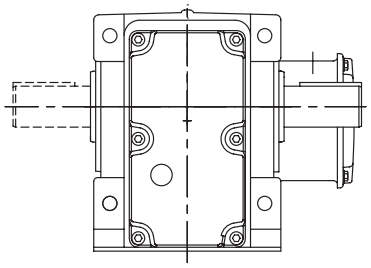

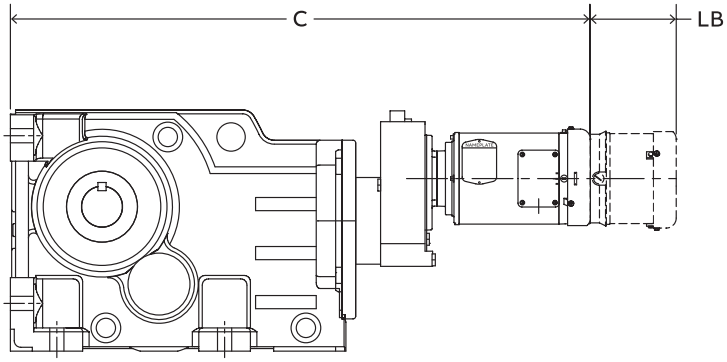

4 Stage reduction

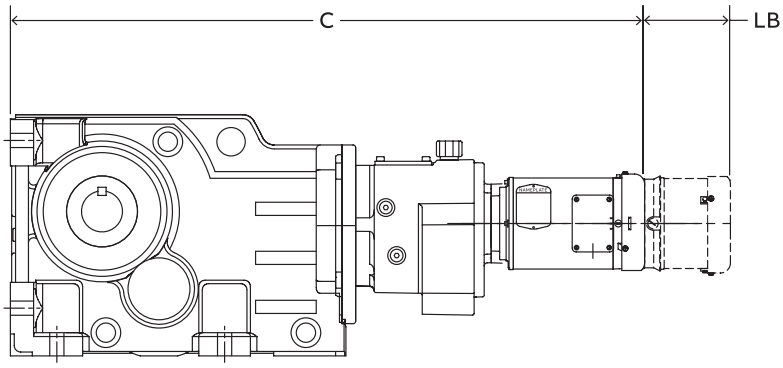

5 Stage reduction

Washdown integral motor dimensions 1/2 – 10 Hp

Reducer size	Reducer stage	71E4		80F4		80G4		90H4		90I4		100J4		112L4		132M4		132N4	
		C	LB	C	LB	C	LB	C	LB	C	LB	C	LB	C	LB	C	LB	C	LB
48	4	26.23	4.81	26.13	4.81	–	–	–	–	–	–	–	–	–	–	–	–	–	–
	5	27.37	4.81	–	–	–	–	–	–	–	–	–	–	–	–	–	–	–	–
68	4	27.63	4.81	27.53	4.81	28.53	3.81	–	–	–	–	–	–	–	–	–	–	–	–
	5	28.77	4.81	–	–	–	–	–	–	–	–	–	–	–	–	–	–	–	–
88	4	29.94	4.81	29.84	4.81	30.84	3.81	30.94	5.26	–	–	–	–	–	–	–	–	–	–
	5	31.08	4.81	–	–	–	–	–	–	–	–	–	–	–	–	–	–	–	–
108	4	33.34	4.81	33.24	4.81	34.24	3.81	34.34	5.26	35.22	5.26	38.57	6.24	–	–	–	–	–	–
	5	35.66	4.81	–	–	–	–	–	–	–	–	–	–	–	–	–	–	–	–
128	4	36.14	4.81	36.04	4.81	37.04	3.81	37.14	5.26	38.02	5.26	41.37	6.24	41.74	5.26	–	–	–	–
	5	38.46	4.81	–	–	–	–	–	–	–	–	–	–	–	–	–	–	–	–
148	4	40.76	4.81	40.66	4.81	41.66	3.81	41.76	5.26	42.64	5.26	45.99	6.24	46.29	5.26	–	–	–	–
	5	41.98	4.81	41.88	4.81	–	–	–	–	–	–	–	–	–	–	–	–	–	–
168	4	44.58	4.81	44.48	4.81	45.48	3.81	45.58	5.26	46.46	5.26	49.81	6.24	50.11	5.26	51.63	8.44	–	–
	5	47.24	4.81	47.14	4.81	48.14	3.81	48.24	5.26	–	–	–	–	–	–	–	–	–	–

See page ENG-20 for additional integral gearmotor information

Output shaft dimensions

Integral – flange mounted – solid shaft
Triple reduction

Metric output shaft

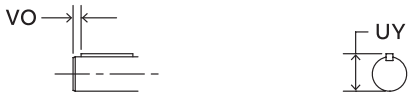

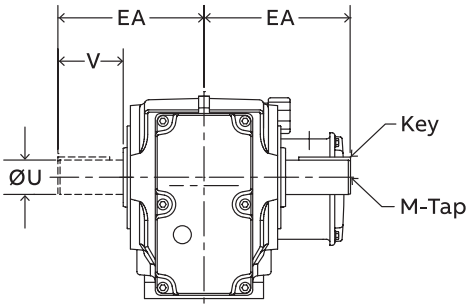

B14 Output flange

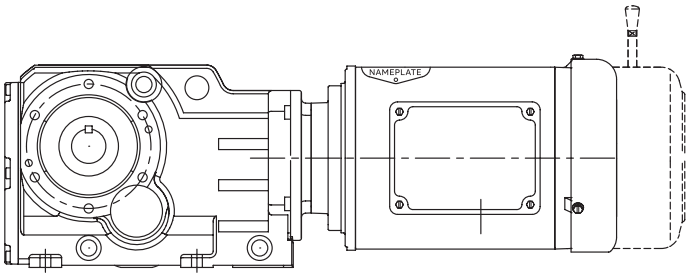

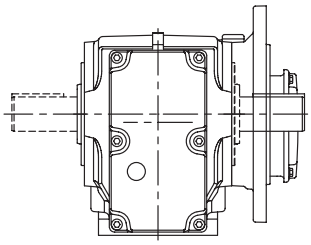

B5 Output flange

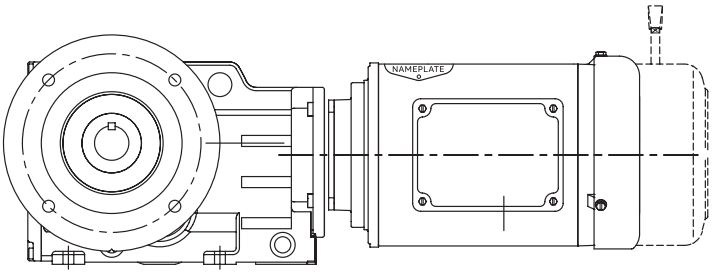

	Standard inch output shaft							Standard metric output shaft							
	Ø U	Tol.	UY	V	EA	Key	M-Tap	Ø U	Tol.	UY	V	VO	EA	Key	M-Tap
38	1.000	+0.0000 -0.0005	1.11	1.97	4.33	1/4 x 1/4 x 1-5/8	3/8-16 UNC X 0.87	25	+0.015 +0.002	28	50	5	110	8 x 7 x 40	M10 x 22
48	1.250	+0.0000 -0.0005	1.37	2.36	5.31	1/4 x 1/4 x 1-7/8	3/8-16 UNC X 0.87	30	+0.015 +0.002	33	60	4	135	8 x 7 x 50	M10 x 22
58	1.375	+0.0000 -0.0005	1.49	2.76	5.99	5/16 x 5/16 x 2-1/8	1/2-13 UNC x 1.12	35	+0.014 +0.002	38	70	7	152	10 x 8 x 56	M12 x 28
68	1.625	+0.0000 -0.0010	1.80	3.15	6.69	3/8 x 3/8 x 2-5/8	5/8-11 UNC X 1.42	40	+0.018 +0.002	43	80	5	170	12 x 8 x 70	M16 x 36
88	2.000	+0.0000 -0.0010	2.22	3.94	8.07	1/2 x 1/2 x 3-1/4	3/4-10 UNC X 1.65	50	+0.030 +0.011	54	100	10	205	14 x 9 x 80	M16 x 36
108	2.375	+0.0000 -0.0010	2.65	4.72	9.45	5/8 x 5/8 x 3-11/16	3/4-10 UNC X 1.65	60	+0.030 +0.011	64	120	5	240	18 x 11 x 100	M20 x 42
128	2.875	+0.0000 -0.0010	3.21	5.51	11.42	3/4 x 3/4 x 4	3/4-10 UNC X 1.65	70	+0.035 +0.013	75	140	8	290	20 x 12 x 125	M20 x 42
148	3.625	+0.0000 -0.0010	4.01	6.69	13.58	7/8 x 7/8 x 5-1/4	1-8 UNC X 1.97	90	+0.035 +0.013	95	170	15	345	25 x 14 x 140	M24 x 50
168	4.375	+0.0000 -0.0010	4.82	8.27	16.34	1 x 1 x 6-5/8	1-8 UNC X 1.97	110	+0.035 +0.013	116	210	15	415	28 x 16 x 180	M24 x 50

See page RHB-204 for optional solid shaft dimensions

Gearcase dimensions

BF_3GH_

Integral – flange mounted – solid shaft
Triple reduction

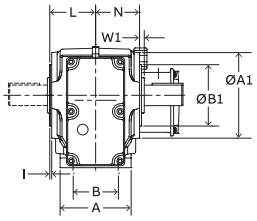

B14 Output flange

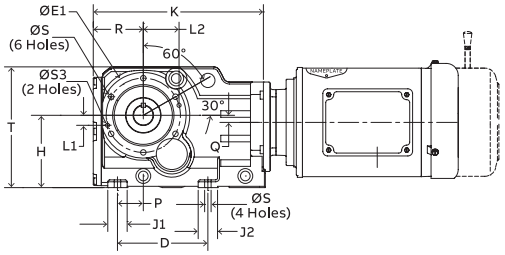

B14 Output flange
Sizes 38-128

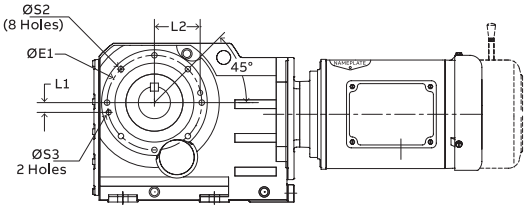

B14 Output flange
Sizes 148-168

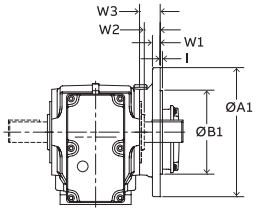

B5 Output flange

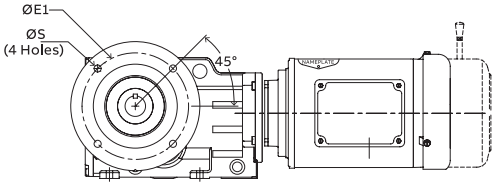

B5 Output flange
Sizes 38-108

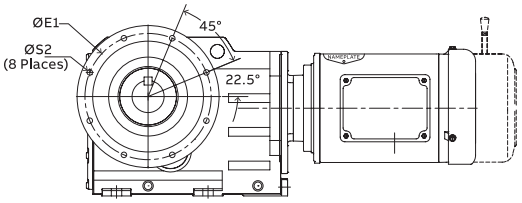

B5 Output flange
Sizes 128-168

	Mounting dimensions				Outline dimensions									
	B	D	H	Ø S	A	K	L	N	P	Q	R	T	J1	J2
38	2.36	4.61	3.94	M10 X 0.67	3.94	9.21	2.36	2.24	1.38	0.37	2.76	6.58	1.26	1.26
48	2.76	5.51	4.41	M10 X 0.66	4.33	10.37	2.80	2.68	1.58	0.43	3.05	7.36	1.18	1.18
58	3.46	5.98	5.20	M12 x 0.93	5.20	11.48	3.15	2.99	1.85	0.39	3.33	8.63	2.06	2.08
68	3.46	5.98	5.51	M12 X 0.93	5.51	12.15	3.39	3.25	1.65	0.26	3.48	9.09	1.97	1.97
88	4.53	6.69	7.09	M16 X 1.10	6.69	14.64	3.80	3.94	1.89	0.79	4.33	11.61	2.17	2.17
108	6.57	8.86	8.35	M16 X 1.10	8.27	18.24	4.53	4.37	2.56	0.51	5.33	13.58	2.76	2.76
128	8.39	9.76	10.43	M20 X 1.33	10.04	20.77	5.71	5.55	3.27	0.79	6.16	16.65	3.15	3.15
148	8.27	11.42	12.40	M24 X 1.61	11.26	24.31	6.65	6.46	3.94	1.46	7.71	19.80	3.54	3.54
168	9.45	13.78	14.76	M30 x 1.57	12.76	28.29	7.84	7.64	4.53	1.97	8.68	23.62	4.33	4.33

	B14 mounting dimensions									B5 mounting dimensions							
	Ø A1	Ø B1	Ø E1	Ø S2	I	W1	Ø S3	L1	L2	Ø A1	Ø B1	Ø E1	Ø S2	I	W1	W2	W3
38	4.72	3.1497	3.94	M8 X 0.55	0.12	0.24	–	–	–	6.30	4.3308	5.12	0.35	0.14	0.39	0.95	1.18
48	5.20	3.7402	4.53	M10 X 0.66	0.12	0.29	–	–	–	7.87	5.1182	6.50	0.43	0.14	0.47	0.97	1.26
58	5.91	4.3308	5.12	M12 X 0.82	0.14	0.29	–	–	–	9.84	7.0867	8.47	0.53	0.16	0.59	0.90	1.20
68	5.91	4.3308	5.12	M12 X 0.82	0.14	0.30	–	–	–	9.84	7.0867	8.47	0.53	0.16	0.59	0.90	1.20
88	7.48	5.1182	6.50	M12 X 0.82	0.14	0.34	–	–	–	11.81	9.0552	10.43	0.53	0.16	0.63	1.46	1.79
108	9.65	7.0867	8.47	M16 X 1.10	0.16	0.35	0.47	1.10	4.06	13.78	9.8419	11.81	0.69	0.20	0.71	1.42	1.77
128	11.61	9.0552	10.43	M16 X 1.10	0.16	0.35	0.47	1.69	4.92	17.71	13.7788	15.75	0.69	0.20	0.87	1.63	1.99
148	13.19	9.8419	11.81	M20 X 1.33	0.20	0.43	0.63	1.22	5.71	17.71	13.7788	15.75	0.69	0.20	0.87	1.61	2.05
168	15.75	11.8104	13.78	M20 X 1.33	0.20	0.43	0.63	1.46	3.73	21.65	17.7157	19.69	0.69	0.20	0.98	2.01	2.44

Standard motor dimensions

BF_3GH_

Integral – flange mounted – solid shaft
Triple reduction

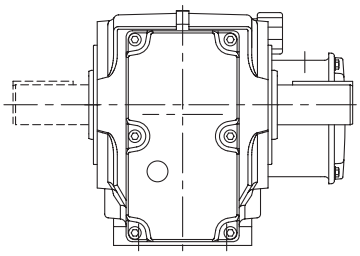

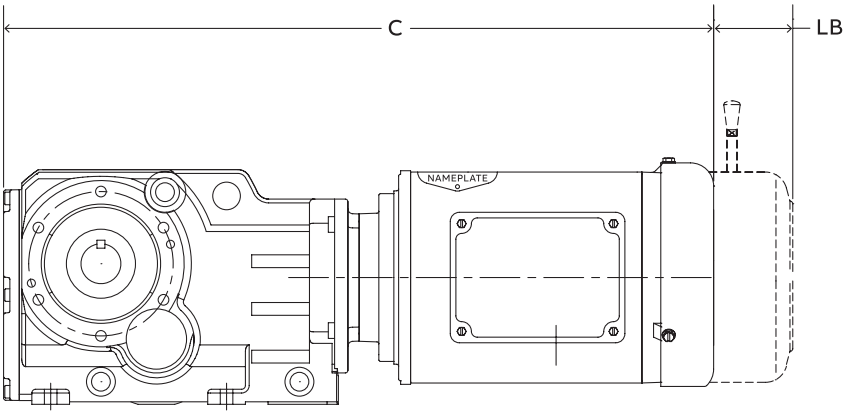

Standard integral motor dimensions 1/4 – 10 Hp

Reducer size	Reducer stage	71C4/71D4/71E4		80F4		80G4		90H4		90I4		100J4		112L4		132M4		132N4	
		C	LB	C	LB	C	LB	C	LB	C	LB	C	LB	C	LB	C	LB	C	LB
38	3	19.74	2.37	19.89	2.11	21.26	1.74	21.36	2.62	22.24	1.74	24.20	1.75	-	-	-	-	-	-
48	3	20.90	2.37	21.05	2.11	22.42	1.74	22.52	2.62	23.40	1.74	25.36	1.75	-	-	-	-	-	-
58	3	21.76	2.37	21.91	2.21	23.28	1.61	23.38	2.62	24.26	1.74	26.11	1.75	27.99	2.50	-	-	-	-
68	3	22.47	2.37	22.62	2.11	23.99	1.74	24.09	2.62	24.97	1.74	26.93	1.75	28.69	2.51	-	-	-	-
88	3	24.72	2.37	24.87	2.11	26.24	1.74	26.34	2.62	27.22	1.74	29.18	1.75	30.87	2.51	32.39	6.38	33.89	6.38
108	3	-	-	27.88	2.11	29.25	1.74	29.35	2.62	30.23	1.74	32.09	1.75	33.74	2.51	35.26	6.38	36.76	6.38
128	3	-	-	-	-	-	-	31.43	2.62	32.31	1.74	34.15	1.75	35.82	2.51	37.30	6.38	38.80	6.38
148	3	-	-	-	-	-	-	-	-	-	-	37.32	1.75	38.94	2.51	40.42	6.38	41.92	6.38
168	3	-	-	-	-	-	-	-	-	-	-	-	-	-	-	44.09	6.38	45.59	6.38

Standard integral motor dimensions 15 – 40 Hp

Reducer size	Reducer stage	160P4		160Q4		180R4		180S4	200T4
		C	LB	C	LB	C	LB	C	C
108	3	39.12	7.02	39.12	7.02	-	-	-	–
128	3	41.20	7.02	41.20	7.02	45.71	5.71	47.46	48.96
148	3	44.09	7.02	44.09	7.02	48.72	5.71	50.47	51.97
168	3	47.78	7.02	47.78	7.02	52.40	5.71	54.15	55.65

See page ENG-20 for additional integral gearmotor information

Washdown motor dimensions

BF_3GH_

Integral – flange mounted – solid shaft
Triple reduction

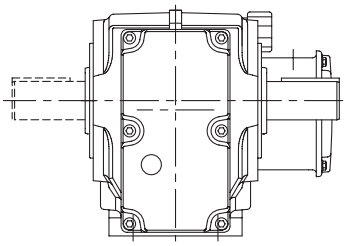

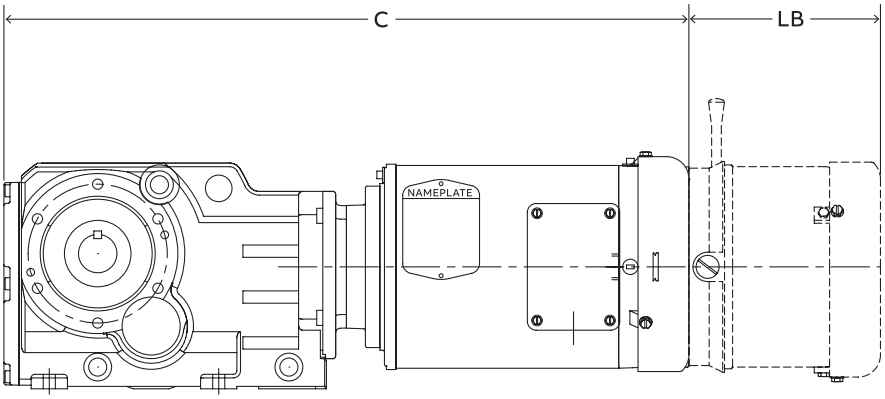

Washdown integral motor dimensions 1/2 – 10 Hp

Reducer size	Reducer stage	771E4		80F4		80G4		90H4		90I4		100J4		112L4		132M4		132N4	
		C	LB	C	LB	C	LB	C	LB	C	LB	C	LB	C	LB	C	LB	C	LB
38	3	20.36	4.81	20.26	4.81	21.26	3.81	21.36	5.26	22.24	5.26	25.59	6.24	-	-	-	-	-	-
48	3	21.52	4.81	21.42	4.81	22.42	3.81	22.52	5.26	23.40	5.26	26.75	6.24	-	-	-	-	-	-
58	3	22.38	4.81	22.38	4.81	23.28	3.81	23.38	5.26	24.26	5.26	27.50	6.24	27.99	5.26	-	-	-	-
68	3	23.09	4.81	22.99	4.81	23.99	3.81	24.09	5.26	24.97	5.26	28.32	6.24	28.69	5.26	-	-	-	-
88	3	25.34	4.81	25.24	4.81	26.24	3.81	26.34	5.26	27.22	5.26	30.57	6.24	30.87	5.26	32.39	8.44	33.89	8.94
108	3	-	-	28.25	4.81	29.25	3.81	29.35	5.26	30.23	5.26	33.48	6.24	33.74	5.26	35.26	8.44	36.76	8.94
128	3	-	-	-	-	-	-	31.43	5.26	32.31	5.26	35.54	6.24	35.82	5.26	37.30	8.44	38.80	8.94
148	3	-	-	-	-	-	-	-	-	-	-	37.32	6.24	38.94	5.26	40.42	8.44	41.92	8.94
168	3	-	-	-	-	-	-	-	-	-	-	-	-	-	-	44.09	8.44	45.59	8.94

See page ENG-20 for additional integral gearmotor information

Output shaft dimensions

Integral – flange mounted – solid shaft

Four- and five-stage reduction

BF_4GH_
BF_5GH_

Metric output shaft

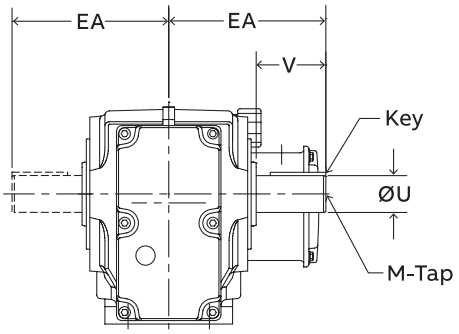

B14 Output flange

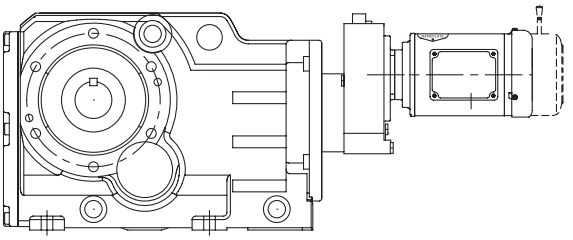

4 Stage reduction

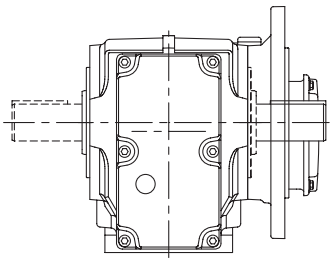

B5 Output flange

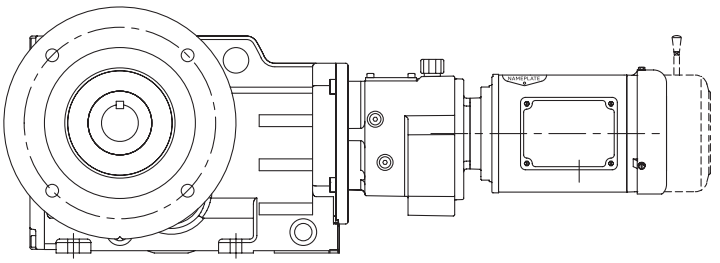

5 Stage reduction

	Standard inch output shaft							Standard metric output shaft							
	Ø U	Tol.	UY	V	EA	Key	M-Tap	Ø U	Tol.	UY	V	Vo	EA	Key	M-Tap
48	1.250	+0.0000 0.0005	1.37	2.36	5.31	1/4 x 1/4 x 1-7/8	3/8-16 UNC X 0.87	30	+0.015 +0.002	33	60	4	135	8 x 7 x 50	M10 x 22
68	1.625	+0.0000 -0.0010	1.80	3.15	6.69	3/8 x 3/8 x 2-5/8	5/8-11 UNC X 1.42	40	+0.018 +0.002	43	80	5	170	12 x 8 x 70	M16 x 36
88	2.000	+0.0000 -0.0010	2.22	3.94	8.07	1/2 x 1/2 x 3-1/4	3/4-10 UNC X 1.65	50	+0.030 +0.011	54	100	10	205	14 x 9 x 80	M16 x 36
108	2.375	+0.0000 -0.0010	2.65	4.72	9.45	5/8 x 5/8 x 3-11/16	3/4-10 UNC X 1.65	60	+0.030 +0.011	64	120	5	240	18 x 11 x 100	M20 x 42
128	2.875	+0.0000 -0.0010	3.21	5.51	11.42	3/4 x 3/4 x 4	3/4-10 UNC X 1.65	70	+0.035 +0.013	75	140	8	290	20 x 12 x 125	M20 x 42
148	3.625	+0.0000 -0.0010	4.01	6.69	13.58	7/8 x 7/8 x 5-1/4	1-8 UNC X 1.97	90	+0.035 +0.013	95	170	15	345	25 x 14 x 140	M24 x 50
168	4.375	+0.0000 -0.0010	4.82	8.27	16.34	1 x 1 x 6-5/8	1-8 UNC X 1.97	110	+0.035 +0.013	116	210	15	415	28 x 16 x 180	M24 x 50

See page RHB-204 for optional solid shaft dimensions

Gearcase dimensions

Integral – flange mounted – solid shaft

Four- and five-stage reduction

BF_4GH_
BF_5GH_

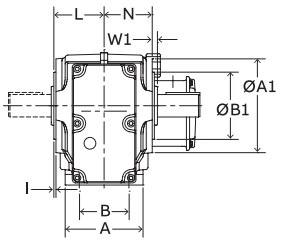

B14 Output flange
Sizes 38-168

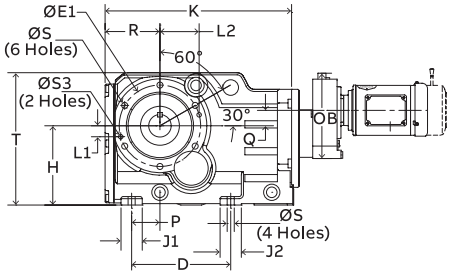

B14 Output flange
Sizes 38-128

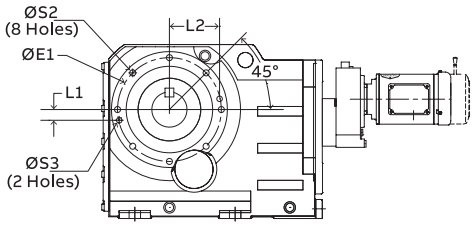

B14 Output flange
Sizes 148-168

4 Stage reduction

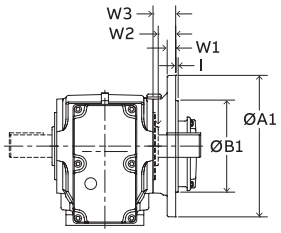

B5 Output flange
Sizes 38-168

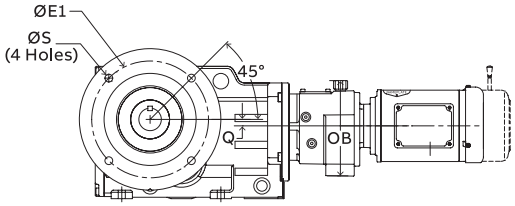

B5 Output flange
Sizes 38-108

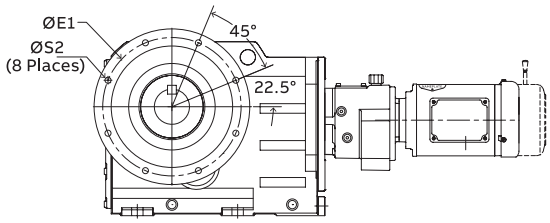

B5 Output flange
Sizes 128-168

5 Stage reduction

	Mounting dimensions				Outline dimensions									4 stage		5 stage	
	B	D	H	Ø S	A	K	L	N	P	R	T	J1	J2	Q	OB	Q	OB
48	2.76	5.51	4.41	M10 X 0.66	4.33	10.37	2.80	2.68	1.58	3.05	7.36	1.18	1.18	1.50	7.83	0.43	6.26
68	3.46	5.98	5.51	M12 X 0.93	5.51	12.15	3.39	3.25	1.65	3.48	9.09	1.97	1.97	1.67	7.83	0.26	6.29
88	4.53	6.69	7.09	M16 X 1.10	6.69	14.64	3.80	3.94	1.89	4.33	11.61	2.17	2.17	1.14	7.83	0.79	6.29
108	6.57	8.86	8.35	M16 X 1.10	8.27	18.24	4.53	4.37	2.56	5.33	13.58	2.76	2.76	2.03	9.84	0.51	8.86
128	8.39	9.76	10.43	M20 X 1.33	10.04	20.77	5.71	5.55	3.27	6.16	16.65	3.15	3.15	1.77	9.84	0.79	8.86
148	8.27	11.42	12.40	M24 X 1.61	11.26	24.31	6.65	6.46	3.94	7.71	19.80	3.54	3.54	1.61	11.57	1.46	8.86
168	9.45	13.78	14.76	M30 x 1.57	12.76	28.29	7.84	7.64	4.53	8.68	23.62	4.33	4.33	1.10	11.57	1.97	10.68

	B14 mounting dimensions									B5 mounting dimensions							
	Ø A1	Ø B1	Ø E1	Ø S2	I	W1	Ø S3	L1	L2	Ø A1	Ø B1	Ø E1	Ø S2	I	W1	W2	W3
48	5.20	3.7402	4.53	M10 X 0.66	0.12	0.29	–	–	–	7.87	5.1182	6.50	0.43	0.14	0.47	0.97	1.26
68	5.91	4.3308	5.12	M12 X 0.82	0.14	0.30	–	–	–	9.84	7.0867	8.47	0.53	0.16	0.59	0.90	1.20
88	7.48	5.1182	6.50	M12 X 0.82	0.14	0.34	–	–	–	11.81	9.0552	10.43	0.53	0.16	0.63	1.46	1.79
108	9.65	7.0867	8.47	M16 X 1.10	0.16	0.35	0.47	1.10	4.06	13.78	9.8419	11.81	0.69	0.20	0.71	1.42	1.77
128	11.61	9.0552	10.43	M16 X 1.10	0.16	0.35	0.47	1.69	4.92	17.71	13.7788	15.75	0.69	0.20	0.87	1.63	1.99
148	13.19	9.8419	11.81	M20 X 1.33	0.20	0.43	0.63	1.22	5.71	17.71	13.7788	15.75	0.69	0.20	0.87	1.61	2.05
168	15.75	11.8104	13.78	M20 X 1.33	0.20	0.43	0.63	1.46	3.73	21.65	17.7157	19.69	0.69	0.20	0.98	2.01	2.44

Standard motor dimensions

Integral – flange mounted – solid shaft

Four- and five-stage reduction

BF_4GH_
BF_5GH_

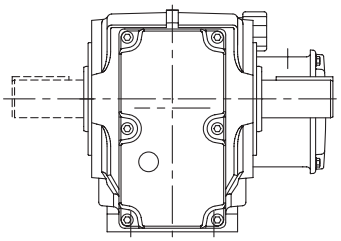

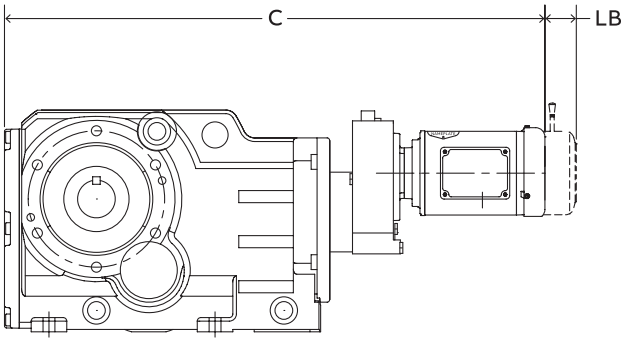

4 Stage reduction

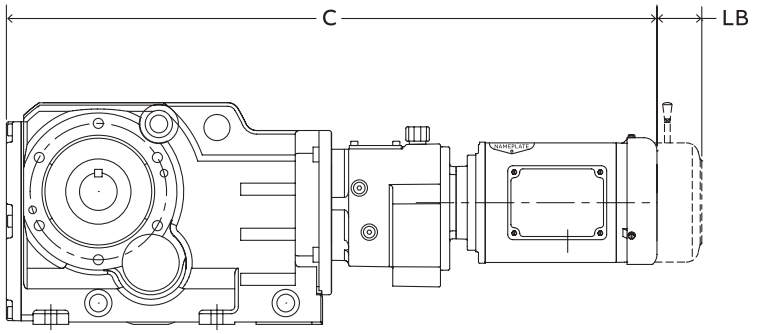

5 Stage reduction

Standard integral motor dimensions 1/4 – 10 Hp

Reducer size	Reducer stage	71C4/71D4/71E4		80F4		80G4		90H4		90I4		100J4		112L4		132M4		132N4	
		C	LB	C	LB	C	LB	C	LB	C	LB	C	LB	C	LB	C	LB	C	LB
48	4	25.86	2.37	26.01	2.11	–	–	–	–	–	–	–	–	–	–	–	–	–	–
	5	27.00	2.37	–	–	–	–	–	–	–	–	–	–	–	–	–	–	–	–
68	4	26.95	2.37	27.10	2.11	28.47	1.74	–	–	–	–	–	–	–	–	–	–	–	–
	5	28.09	2.37	–	–	–	–	–	–	–	–	–	–	–	–	–	–	–	–
88	4	29.26	2.37	29.41	2.11	30.78	1.74	30.88	2.62	–	–	–	–	–	–	–	–	–	–
	5	30.40	2.37	–	–	–	–	–	–	–	–	–	–	–	–	–	–	–	–
108	4	32.78	2.37	32.93	2.11	34.30	1.74	34.40	2.62	35.28	1.74	37.24	1.75	–	–	–	–	–	–
	5	35.10	2.37	–	–	–	–	–	–	–	–	–	–	–	–	–	–	–	–
128	4	35.58	2.37	35.73	2.11	37.10	1.74	37.20	2.62	38.08	1.74	40.04	1.75	41.80	2.51	–	–	–	–
	5	37.90	2.37	–	–	–	–	–	–	–	–	–	–	–	–	–	–	–	–
148	4	39.51	2.37	39.66	2.11	41.03	1.74	41.13	2.62	42.01	1.74	43.97	1.75	45.66	2.51	–	–	–	–
	5	40.73	2.37	40.88	2.11	–	–	–	–	–	–	–	–	–	–	–	–	–	–
168	4	43.37	2.37	43.52	2.11	44.89	1.74	44.99	2.62	45.87	1.74	47.83	1.75	49.52	2.51	51.04	6.38	–	–
	5	46.03	2.37	46.18	2.11	47.55	1.74	47.65	2.62	–	–	–	–	–	–	–	–	–	–

See page ENG-20 for additional integral gearmotor information

Washdown motor dimensions

Integral – flange mounted – solid shaft

Four- and five-stage reduction

BF_4GH_
BF_5GH_

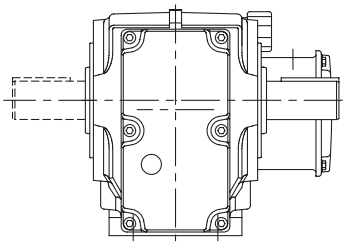

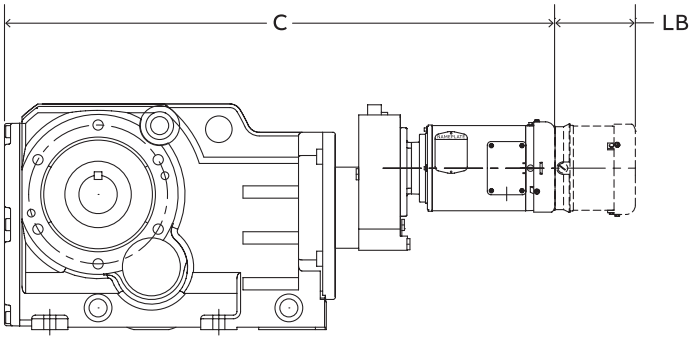

4 Stage reduction

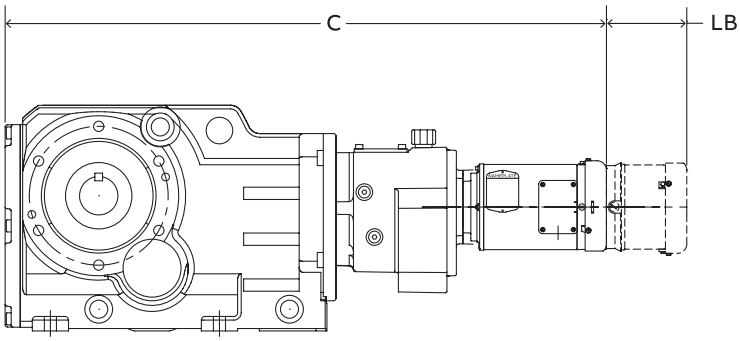

5 Stage reduction

Washdown integral motor dimensions 1/2 – 10 Hp

Reducer size	Reducer stage	71E4		80F4		80G4		90H4		90I4		100J4		112L4		132M4		132N4	
		C	LB	C	LB	C	LB	C	LB	C	LB	C	LB	C	LB	C	LB	C	LB
48	4	26.48	4.81	26.38	4.81	–	–	–	–	–	–	–	–	–	–	–	–	–	–
	5	27.62	4.81	–	–	–	–	–	–	–	–	–	–	–	–	–	–	–	–
68	4	27.57	4.81	27.47	4.81	28.47	3.81	–	–	–	–	–	–	–	–	–	–	–	–
	5	28.71	4.81	–	–	–	–	–	–	–	–	–	–	–	–	–	–	–	–
88	4	29.88	4.81	29.78	4.81	30.78	3.81	30.88	5.26	–	–	–	–	–	–	–	–	–	–
	5	31.02	4.81	–	–	–	–	–	–	–	–	–	–	–	–	–	–	–	–
108	4	33.40	4.81	33.30	4.81	34.30	3.81	34.40	5.26	35.28	5.26	38.63	6.24	–	–	–	–	–	–
	5	35.72	4.81	–	–	–	–	–	–	–	–	–	–	–	–	–	–	–	–
128	4	36.20	4.81	36.10	4.81	37.10	3.81	37.20	5.26	38.08	5.26	41.43	6.24	41.80	5.26	–	–	–	–
	5	38.52	4.81	–	–	–	–	–	–	–	–	–	–	–	–	–	–	–	–
148	4	40.13	4.81	40.03	4.81	41.03	3.81	41.13	5.26	42.01	5.26	45.36	6.24	45.66	5.26	–	–	–	–
	5	41.35	4.81	41.25	4.81	–	–	–	–	–	–	–	–	–	–	–	–	–	–
168	4	43.99	4.81	43.89	4.81	44.89	3.81	44.99	5.26	45.87	5.26	49.22	6.24	49.52	5.26	51.04	8.44	–	–
	5	46.65	4.81	46.55	4.81	47.55	3.81	47.65	5.26	–	–	–	–	–	–	–	–	–	–

Output shaft dimensions

C-face – foot mounted – straight hollow bore

Triple reduction

BB_3C_
BB_3L_

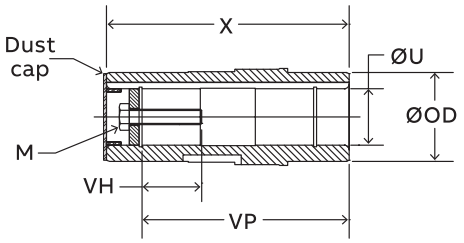

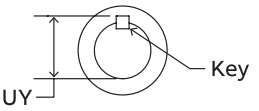

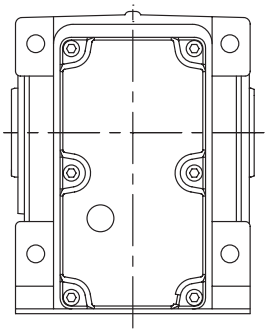

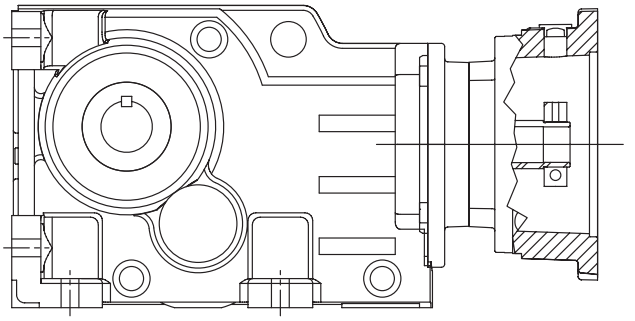

	Standard inch hollow output						Standard metric hollow output					
	Ø U	Tol.	UY	VH	Key	M-Tap	Ø U	Tol.	UY	VH	Key	M-Tap
38	1.250	+0.0010 +0.0004	1.38	1.47	1/4 x 1/4 x 1-7/8	3/8-16 X 1-3/4 UNC	30	+0.020 +0.007	33	31	8 x 7 x 40	M10 x 40
48	1.375	+0.0010 +0.0004	1.53	1.45	5/16 x 5/16 x 2-3/16	3/8-16 X 1-3/4 UNC	35	+0.025 +0.009	38	43	10 x 8 x 45	M10 x 50
58	1.500	+0.0010 +0.0004	1.68	2.05	3/8 x 3/8 x 3-1/8	5/8-11 X 2-1/4 UNC	40	+0.025 +0.009	43	48	12 x 8 x 50	M16 x 60
68	1.500	+0.0010 +0.0004	1.68	2.05	3/8 x 3/8 x 3-1/8	5/8-11 X 2-1/4 UNC	40	+0.025 +0.009	43	48	12 x 8 x 50	M16 x 60
88	2.000	+0.0012 +0.0004	2.23	1.89	1/2 x 1/2 x 3-15/16	3/4-10 X 2-1/4 UNC	50	+0.029 +0.010	54	48	14 x 9 x 80	M16 x 36
108	2.375	+0.0012 +0.0004	2.66	2.53	5/8 x 5/8 x 4-1/16	3/4-10 X 3 UNC	60	+0.029 +0.010	64	68	18 x 11 x 100	M20 x 80
128	2.750	+0.0012 +0.0004	3.04	2.51	5/8 x 5/8 x 6-1/8	3/4-10 X 3 UNC	70	+0.029 +0.010	75	68	20 x 12 x 110	M20 x 80
148	3.625	+0.0012 +0.0004	3.84	2.31	7/8 x 7/8 x 7-1/16	1-8 X 2-1/2 UNC	80	+0.034 +0.012	85	68	22 x 14 x 125	M20 x 85
168	4.000	+0.0014 +0.0005	4.45	2.29	1 x 1 x 5-7/8	1-8 X 2-1/2 UNC	100	+0.034 +0.012	106	77	28 x 16 x 160	M24 x 95

See page RHB-205 for optional hollow bore sizes

Gearcase dimensions

BB_3C_
BB_3L_

C-face – foot mounted – straight hollow bore

Triple reduction

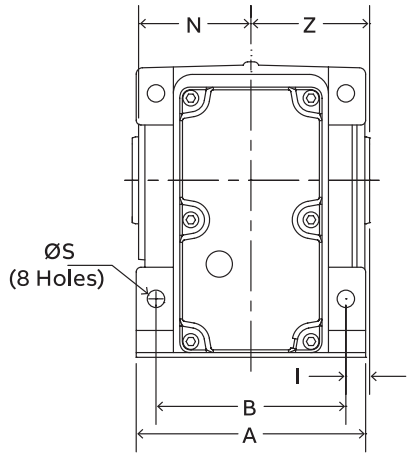

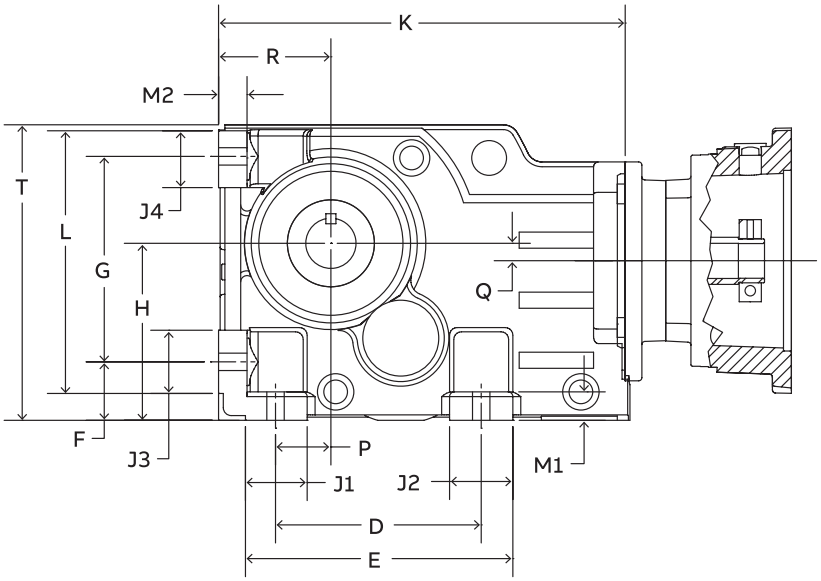

	Mounting dimensions										
	A	B	D	E	F	G	H	I	Ø S	VP	Z
38	4.72	3.94	4.33	5.55	1.26	4.53	3.94	0.39	0.43	4.02	2.36
48	5.71	4.72	5.12	6.65	1.45	5.12	4.41	0.59	0.43	5.04	2.95
58	6.30	5.12	5.12	6.78	1.77	5.91	5.20	0.72	0.53	5.59	3.28
68	6.69	5.51	4.72	6.69	1.77	6.30	5.51	0.79	0.53	5.91	3.54
88	7.87	6.50	5.91	8.07	2.17	7.87	7.09	0.89	0.71	7.09	4.13
108	9.06	7.09	7.09	10.04	2.76	9.17	8.35	1.18	0.87	8.19	4.72
128	11.42	9.45	9.45	12.60	2.95	11.61	10.43	1.18	1.02	10.35	5.91
148	13.39	10.63	11.02	15.20	3.74	14.17	12.40	1.58	1.30	12.20	6.89
168	15.75	12.99	13.78	18.11	4.33	16.54	14.76	1.58	1.54	14.41	8.07

	Outline dimensions														
	J1	J2	J3	J4	M1	M2	K	P	L	N	R	T	Q	Ø OD	X
38	1.38	1.26	1.30	1.22	0.63	0.63	8.94	1.10	5.79	2.28	2.48	6.58	0.37	1.77	4.72
48	1.54	1.58	1.58	1.42	0.71	0.71	10.12	1.38	6.54	2.80	2.80	7.36	0.43	2.17	5.91
58	1.68	1.68	1.96	1.79	0.81	0.73	11.3	1.18	7.72	3.15	3.15	8.58	0.39	2.17	6.54
68	1.97	1.97	1.97	1.89	0.87	0.87	12.21	1.18	8.19	3.39	3.54	9.09	0.26	2.56	7.09
88	2.17	2.17	2.17	2.56	0.98	0.98	14.72	1.58	10.31	3.94	4.41	11.61	0.79	3.15	8.27
108	2.76	3.15	2.76	2.91	1.18	1.18	18.11	2.17	12.09	4.53	5.20	13.58	0.51	3.74	9.45
128	3.15	3.15	3.15	3.54	1.38	1.38	20.91	2.95	15.09	5.71	6.30	16.65	0.79	4.33	11.81
148	3.54	4.17	3.54	3.50	1.58	1.58	24.49	3.74	17.67	6.65	7.87	19.80	1.46	4.72	13.78
168	4.33	4.33	4.33	4.33	1.77	1.77	28.47	4.53	20.87	7.84	8.86	23.62	1.97	5.91	16.14

Clamp collar – NEMA/IEC dimensions

BB_3CN_
BB_3CI_

C-face – foot mounted – straight hollow bore

Triple reduction

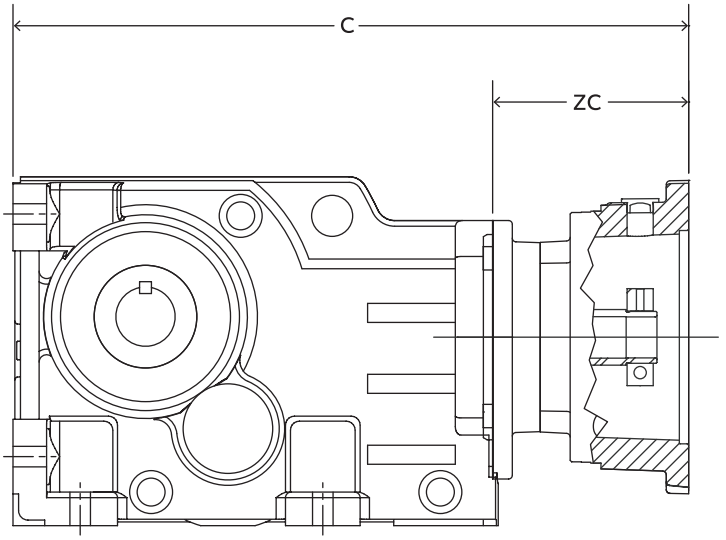

NEMA clamp collar motor dimensions

Reducer size	Reducer stage	56C		140TC		180TC		210TC		250TC		280TC		320TC		360TC	
		C	ZC	C	ZC	C	ZC	C	ZC	C	ZC	C	ZC	C	ZC	C	ZC
38	3	12.44	3.50	13.11	4.17	13.43	4.49	–	–	–	–	–	–	–	–	–	–
48	3	13.62	3.50	14.29	4.17	14.61	4.49	–	–	–	–	–	–	–	–	–	–
58	3	14.51	3.21	15.18	3.88	16.26	4.96	–	–	–	–	–	–	–	–	–	–
68	3	15.50	3.29	16.17	3.96	17.75	5.54	17.54	5.33	–	–	–	–	–	–	–	–
88	3	17.80	3.08	18.46	3.74	19.96	5.24	21.85	7.13	20.86	6.13	–	–	–	–	–	–
108	3	–	–	21.28	3.17	22.64	4.53	24.53	6.42	24.47	6.36	25.00	6.88	–	–	–	–
128	3	–	–	23.55	2.64	24.86	3.95	26.76	5.85	26.74	5.83	27.54	6.63	28.97	8.01	–	–
148	3	–	–	–	–	28.07	3.58	29.92	5.43	29.66	5.17	30.58	6.09	32.17	7.68	33.94	9.41
168	3	–	–	–	–	–	–	33.59	5.12	33.34	4.87	34.26	5.79	35.87	7.40	37.58	9.11

IEC clamp collar motor dimensions

Reducer size	Reducer stage	71D		80D		90D		100D		112D		132D		160D		180D		200D	
		C	ZC	C	ZC	C	ZC	C	ZC	C	ZC	C	ZC	C	ZC	C	ZC	C	ZC
38	3	11.70	2.76	12.64	3.70	12.64	3.70	12.94	4.00	–	–	–	–	–	–	–	–	–	–
48	3	12.88	2.76	13.82	3.70	13.82	3.70	14.12	4.00	–	–	–	–	–	–	–	–	–	–
58	3	13.80	2.50	14.75	3.45	14.75	3.45	15.04	3.74	15.37	4.07	–	–	–	–	–	–	–	–
68	3	14.75	2.54	15.69	3.48	15.69	3.48	15.99	3.78	16.32	4.11	–	–	–	–	–	–	–	–
88	3	17.03	2.31	17.97	3.25	17.97	3.25	18.27	3.55	18.52	3.80	20.14	5.42	–	–	–	–	–	–
108	3	–	–	20.77	2.66	20.77	2.66	20.96	2.85	21.18	3.07	22.80	4.69	24.50	6.39	–	–	–	–
128	3	–	–	–	–	23.11	2.20	23.29	2.38	23.53	2.62	25.10	4.19	26.84	5.93	27.37	6.46	27.76	6.85
148	3	–	–	–	–	–	–	26.50	2.01	26.69	2.20	28.27	3.78	29.77	5.28	30.42	5.93	30.81	6.32
168	3	–	–	–	–	–	–	–	–	–	–	31.93	3.46	33.45	4.98	34.10	5.63	34.49	6.02

Three-piece coupled – NEMA/IEC dimensions

BB_3LN_
BB_3LI_

C-face – foot mounted - straight hollow bore

Triple reduction

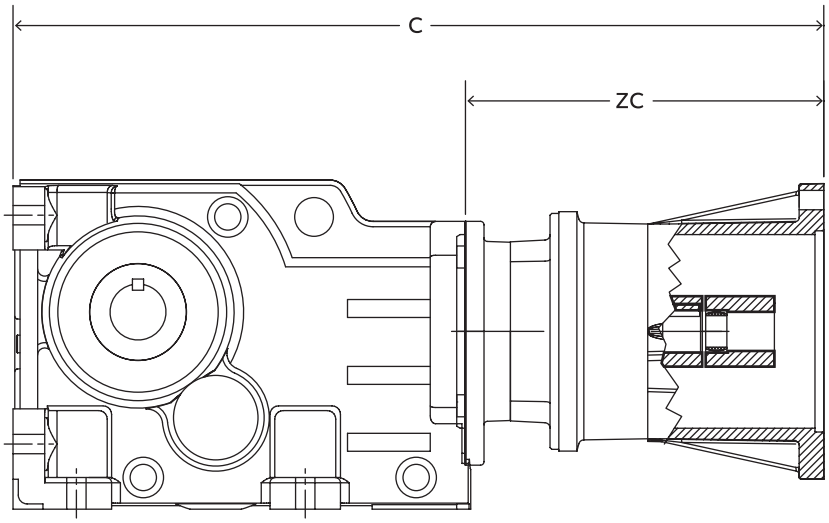

NEMA Three-piece coupled motor dimensions

Reducer size	Reducer stage	56C		140TC		180TC		210TC		250TC		280TC		320TC		360TC	
		C	ZC	C	ZC	C	ZC	C	ZC	C	ZC	C	ZC	C	ZC	C	ZC
38	3	15.53	6.59	16.95	8.01	–	–	–	–	–	–	–	–	–	–	–	–
48	3	16.71	6.59	18.13	8.01	–	–	–	–	–	–	–	–	–	–	–	–
58	3	17.64	6.34	19.06	7.76	19.85	8.55	–	–	–	–	–	–	–	–	–	–
68	3	18.59	6.38	20.01	7.80	21.28	9.07	–	–	–	–	–	–	–	–	–	–
88	3	20.87	6.15	22.28	7.56	23.48	8.76	25.63	10.91	–	–	–	–	–	–	–	–
108	3	–	–	25.08	6.97	26.14	8.03	28.29	10.18	30.24	12.13	–	–	–	–	–	–
128	3	–	–	27.42	6.52	28.58	7.68	30.59	9.69	32.58	11.67	35.28	14.37	–	–	–	–
148	3	–	–	–	–	31.79	7.30	33.76	9.27	35.51	11.02	38.33	13.84	40.83	16.34	–	–
168	3	–	–	–	–	–	–	37.43	8.96	39.20	10.73	42.01	13.54	44.51	16.04	45.56	17.09

0.02 in

Reducer size	Reducer stage	71D		80D		90D		100D		112D		132D		160D		180D		200D		225D		250D	
		C	ZC	C	ZC	C	ZC	C	ZC	C	ZC	C	ZC	C	ZC	C	ZC	C	ZC	C	ZC	C	ZC
38	3	16.87	7.93	16.87	7.93	17.76	8.82	–	–	–	–	–	–	–	–	–	–	–	–	–	–	–	–
48	3	18.05	7.93	18.05	7.93	18.94	8.82	–	–	–	–	–	–	–	–	–	–	–	–	–	–	–	–
58	3	–	–	18.98	7.68	18.98	7.68	19.87	8.57	19.82	8.52	–	–	–	–	–	–	–	–	–	–	–	–
68	3	–	–	19.93	7.72	19.93	7.72	20.81	8.60	20.77	8.56	–	–	–	–	–	–	–	–	–	–	–	–
88	3	–	–	22.20	7.48	22.20	7.48	23.09	8.37	22.97	8.25	25.39	10.67	–	–	–	–	–	–	–	–	–	–
108	3	–	–	25.00	6.89	25.00	6.89	25.79	7.68	25.63	7.52	28.05	9.94	30.67	12.56	–	–	–	–	–	–	–	–
128	3	–	–	–	–	27.34	6.43	28.11	7.20	27.98	7.07	30.36	9.45	33.01	12.10	35.00	35.04	35.04	14.13	–	–	–	–
148	3	–	–	–	–	–	–	31.32	6.83	31.14	6.65	33.53	9.04	35.95	11.46	38.05	13.56	38.09	13.60	41.38	16.89	–	–
168	3	–	–	–	–	–	–	–	–	–	–	37.19	8.72	39.63	11.16	41.74	13.27	41.78	13.31	45.06	16.59	45.24	16.77

Output shaft dimensions

C-face – foot mounted – straight hollow bore

Four- and five-stage reduction

BB_4C_
BB_5C_
BB_4L_
BB_5L_

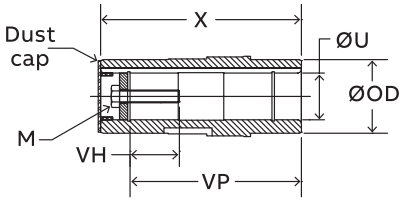

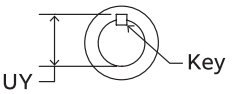

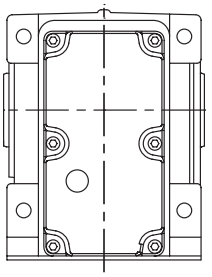

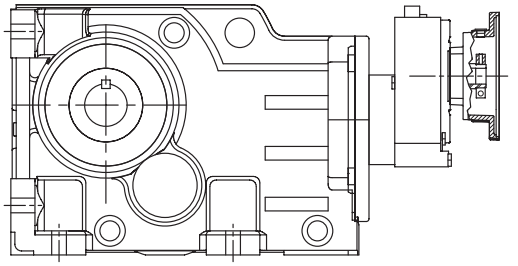

4 Stage reduction

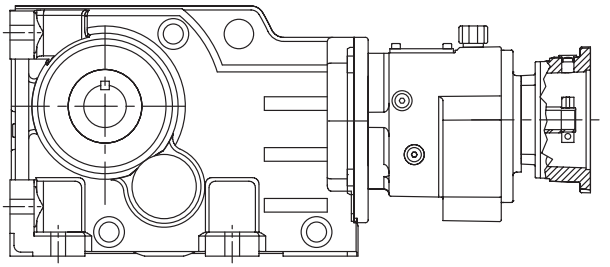

5 Stage reduction

	Standard inch hollow output						Standard metric hollow output					
	Ø U	Tol.	UY	VH	Key	M-Tap	Ø U	Tol.	UY	VH	Key	M-Tap
48	1.375	+0.0010 +0.0004	1.53	1.45	5/16 x 5/16 x 2-3/16	3/8-16 X 1-3/4 UNC	35	+0.025 +0.009	38	43	10 x 8 x 45	M10 x 50
68	1.500	+0.0010 +0.0004	1.68	2.05	3/8 x 3/8 x 3-1/8	5/8-11 X 2-1/4 UNC	40	+0.025 +0.009	43	48	12 x 8 x 50	M16 x 60
88	2.000	+0.0012 +0.0004	2.23	1.89	1/2 x 1/2 x 3-15/16	3/4-10 X 2-1/4 UNC	50	+0.029 +0.010	54	48	14 x 9 x 80	M16 x 36
108	2.375	+0.0012 +0.0004	2.66	2.53	5/8 x 5/8 x 4-1/16	3/4-10 X 3 UNC	60	+0.029 +0.010	64	68	18 x 11 x 100	M20 x 80
128	2.750	+0.0012 +0.0004	3.04	2.51	5/8 x 5/8 x 6-1/8	3/4-10 X 3 UNC	70	+0.029 +0.010	75	68	20 x 12 x 110	M20 x 80
148	3.625	+0.0012 +0.0004	3.84	2.31	7/8 x 7/8 x 7-1/16	1-8 X 2-1/2 UNC	80	+0.034 +0.012	85	68	22 x 14 x 125	M20 x 85
168	4.000	+0.0014 +0.0005	4.45	2.29	1 x 1 x 5-7/8	1-8 X 2-1/2 UNC	100	+0.034 +0.012	106	77	28 x 16 x 160	M24 x 95

See page RHB-205 for optional hollow bore sizes

Gearcase dimensions

C-face – foot mounted – straight hollow bore

Four- and five-stage reduction

BB_4C_
BB_5C_
BB_4L_
BB_5L_

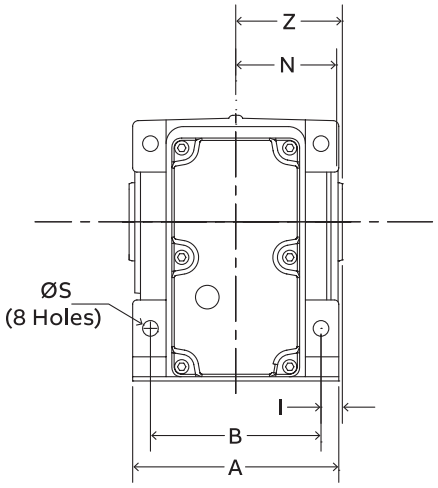

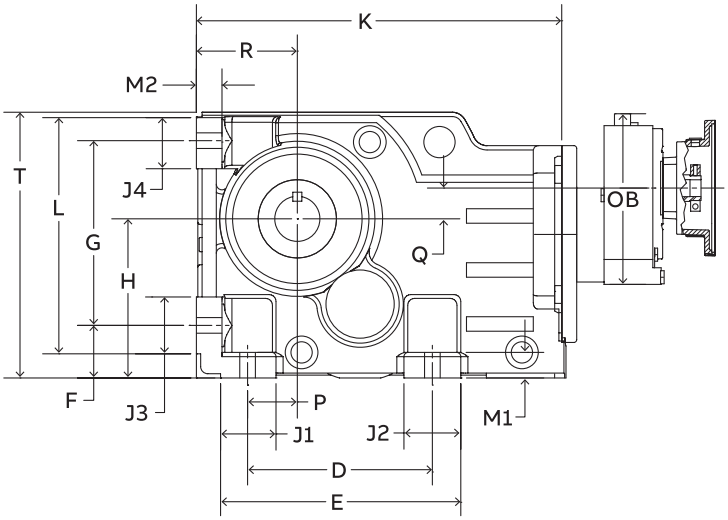

4 Stage reduction

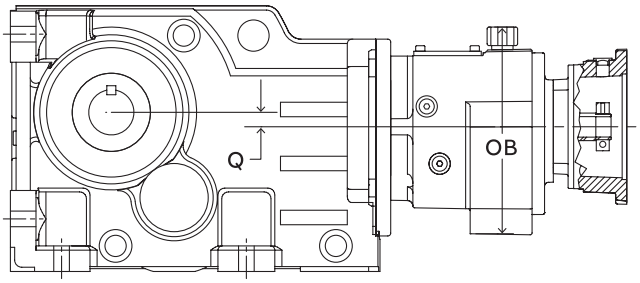

5 Stage reduction

	Mounting dimensions								
	A	B	D	E	F	G	H	I	ØS
48	5.71	4.72	5.12	6.65	1.45	5.12	4.41	0.59	0.43
68	6.69	5.51	4.72	6.69	1.77	6.30	5.51	0.79	0.53
88	7.87	6.50	5.91	8.07	2.17	7.87	7.09	0.89	0.71
108	9.06	7.09	7.09	10.04	2.76	9.17	8.35	1.18	0.87
128	11.42	9.45	9.45	12.60	2.95	11.61	10.43	1.18	1.02
148	13.39	10.63	11.02	15.20	3.74	14.17	12.40	1.58	1.30
168	15.75	12.99	13.78	18.11	4.33	16.54	14.76	1.58	1.54

	Outline dimensions												4 stage		5 stage	
	J1	J2	J3	J4	M1	M2	K	P	L	N	R	T	Q	OD	Q	OD
48	1.54	1.58	1.58	1.42	0.71	0.71	10.12	1.38	6.54	2.80	2.80	7.36	1.50	7.83	0.43	6.26
68	1.97	1.97	1.97	1.89	0.87	0.87	12.21	1.18	8.19	3.39	3.54	9.09	1.67	7.83	0.26	6.29
88	2.17	2.17	2.17	2.56	0.98	0.98	14.72	1.58	10.31	3.94	4.41	11.61	1.14	7.83	0.79	6.29
108	2.76	3.15	2.76	2.91	1.18	1.18	18.11	2.17	12.09	4.53	5.20	13.58	2.03	9.84	0.51	8.86
128	3.15	3.15	3.15	3.54	1.38	1.38	20.91	2.95	15.09	5.71	6.30	16.65	1.77	9.84	0.79	8.86
148	3.54	4.17	3.54	3.50	1.58	1.58	24.49	3.74	17.67	6.65	7.87	19.80	1.61	11.57	1.46	8.86
168	4.33	4.33	4.33	4.33	1.77	1.77	28.47	4.53	20.87	7.84	8.86	23.62	1.10	11.57	1.97	10.68

Clamp collar – NEMA/IEC dimensions

C-face – foot mounted – straight hollow bore

Four- and five-stage reduction

BB_4CN_
BB_5CN_
BB_4CI_
BB_5CI_

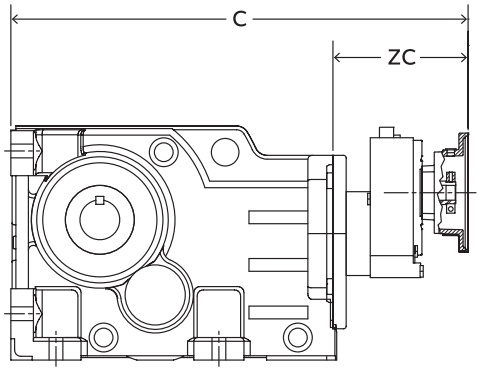

4 Stage reduction

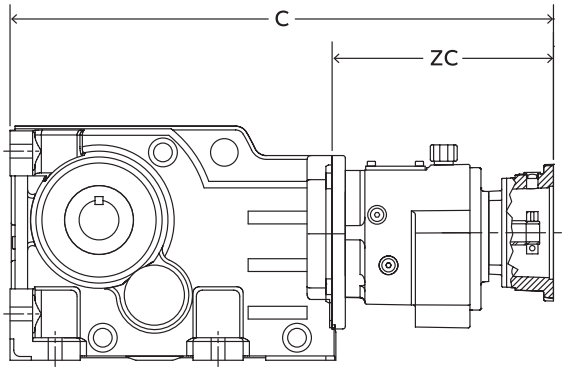

5 Stage reduction

NEMA clamp collar motor dimensions

Reducer size	Reducer stage	56C		140TC		180TC		210TC	
		C	ZC	C	ZC	C	ZC	C	ZC
48	4	18.57	8.45	19.27	9.15	19.57	9.45	–	–
	5	19.72	9.60	20.39	10.27	20.72	10.60	–	–
68	4	20.27	8.06	20.97	8.76	21.27	9.06	–	–
	5	21.42	9.21	22.09	9.88	22.42	10.21	–	–
88	4	22.72	8.00	23.42	8.70	23.72	9.00	–	–
	5	23.87	9.15	24.54	9.82	24.87	10.15	–	–
108	4	25.93	7.82	26.53	8.42	28.13	10.02	–	–
	5	28.27	10.16	28.94	10.83	30.51	12.40	–	–
128	4	29.05	8.14	29.65	8.74	31.25	10.34	–	–
	5	30.92	10.01	31.59	10.68	33.16	12.25	–	–
148	4	33.05	8.56	33.75	9.26	35.25	10.76	37.15	12.66
	5	34.29	9.80	34.96	10.47	36.53	12.04	–	–
168	4	36.88	8.41	37.58	9.11	39.08	10.61	40.98	12.51
	5	40.10	11.63	40.77	12.30	42.27	13.80	44.19	15.72

IEC clamp collar motor dimensions

Reducer size	Reducer stage	71D		80D		90D		100D		112D		132D	
		C	ZC	C	ZC	C	ZC	C	ZC	C	ZC	C	ZC
48	4	17.87	7.75	18.77	8.65	18.77	8.65	19.07	8.95	–	–	–	–
	5	19.01	8.89	19.95	9.83	19.95	9.83	20.25	10.13	–	–	–	–
68	4	19.57	7.36	20.47	8.26	20.47	8.26	20.77	8.56	–	–	–	–
	5	20.71	8.50	21.65	9.44	21.65	9.44	21.95	9.74	–	–	–	–
88	4	22.02	7.30	22.92	8.20	22.92	8.20	23.22	8.50	–	–	–	–
	5	23.16	8.44	24.10	9.38	24.10	9.38	24.40	9.68	–	–	–	–
108	4	25.23	7.12	26.13	8.02	26.13	8.02	26.43	8.32	26.73	8.62	–	–
	5	27.56	9.45	28.51	10.40	28.51	10.40	28.80	10.69	29.14	11.03	–	–
128	4	28.35	7.44	29.25	8.34	29.25	8.34	29.55	8.64	29.85	8.94	–	–
	5	30.21	9.30	31.16	10.25	31.16	10.25	31.45	10.54	31.79	10.88	–	–
148	4	32.35	7.86	33.35	8.86	33.35	8.86	33.65	9.16	33.85	9.36	35.45	10.96
	5	33.58	9.09	34.53	10.04	34.53	10.04	34.82	10.33	35.16	10.67	–	–
168	4	36.18	7.71	37.18	8.71	37.18	8.71	37.48	9.01	37.68	9.21	39.28	10.81
	5	39.39	10.92	40.34	11.87	40.34	11.87	40.63	12.16	40.89	12.42	42.50	14.03

Three-piece coupled – NEMA/IEC dimensions

C-face – foot mounted – straight hollow bore

Four- and five-stage reduction

BB_4LN_
BB_5LN_
BB_4LI_
BB_5LI_

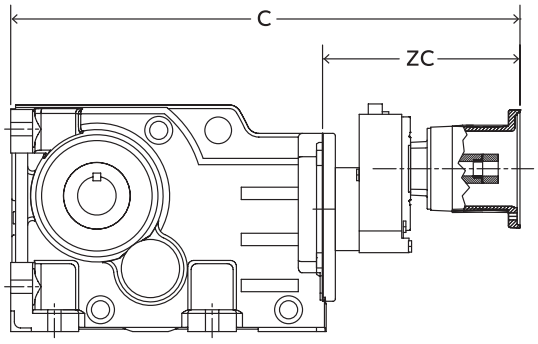

4 Stage reduction

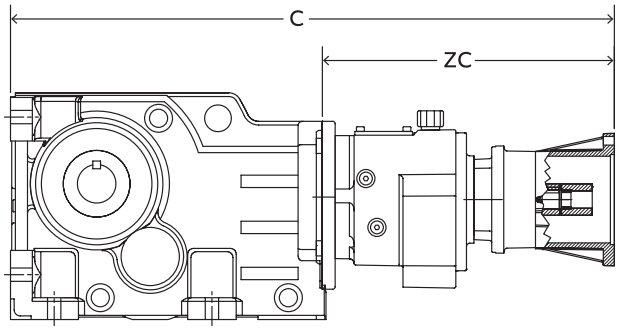

5 Stage reduction

NEMA Three-piece coupled motor dimensions

Reducer size	Reducer stage	56C		140TC		180TC		210TC	
		C	ZC	C	ZC	C	ZC	C	ZC
48	4	21.67	11.55	23.07	12.95	–	–	–	–
	5	22.85	12.73	24.26	14.14	–	–	–	–
68	4	23.37	11.16	24.77	12.56	–	–	–	–
	5	24.55	12.34	25.96	13.75	–	–	–	–
88	4	25.82	11.10	27.22	12.50	–	–	–	–
	5	27.00	12.28	28.41	13.69	–	–	–	–
108	4	29.03	10.92	30.43	12.32	31.73	13.62	–	–
	5	31.40	13.29	32.82	14.71	34.10	15.99	–	–
128	4	32.15	11.24	33.55	12.64	34.85	13.94	–	–
	5	34.05	13.14	35.47	14.56	36.75	15.84	–	–
148	4	36.25	11.76	37.65	13.16	38.85	14.36	40.75	16.26
	5	37.42	12.93	38.84	14.35	40.12	15.63	–	–
168	4	40.08	11.61	41.48	13.01	42.68	14.21	44.58	16.11
	5	43.23	14.76	44.65	16.18	45.85	17.38	48.00	19.53

IEC Three-piece coupled motor dimensions

Reducer size	Reducer stage	71D		80D		90D		100D		112D		132D	
		C	ZC	C	ZC	C	ZC	C	ZC	C	ZC	C	ZC
48	4	–	–	23.07	12.95	23.07	12.95	23.87	13.75	–	–	–	–
	5	–	–	24.18	14.06	24.18	14.06	25.07	14.95	–	–	–	–
68	4	–	–	24.77	12.56	24.77	12.56	25.57	13.36	–	–	–	–
	5	–	–	25.88	13.67	25.88	13.67	26.77	14.56	–	–	–	–
88	4	–	–	27.22	12.50	27.22	12.50	28.02	13.30	–	–	–	–
	5	–	–	28.33	13.61	28.33	13.61	29.22	14.50	–	–	–	–
108	4	–	–	30.33	12.22	30.33	12.22	31.23	13.12	31.23	13.12	–	–
	5	–	–	32.74	14.63	32.74	14.63	33.62	15.51	33.58	15.47	–	–
128	4	–	–	33.45	12.54	33.45	12.54	34.35	13.44	34.35	13.44	–	–
	5	–	–	35.39	14.48	35.39	14.48	36.27	15.36	36.23	15.32	–	–
148	4	–	–	–	–	37.55	13.06	38.45	13.96	38.35	13.86	40.75	16.26
	5	–	–	38.76	14.27	38.76	14.27	39.64	15.15	39.60	15.11	–	–
168	4	–	–	–	–	41.38	12.91	42.28	13.81	42.18	13.71	44.58	16.11
	5	–	–	44.57	16.10	44.57	16.10	45.46	16.99	45.34	16.87	47.76	19.29

Output shaft dimensions

C-face – flange mounted – straight hollow bore

Triple reduction

BF_3C_
BF_3L_

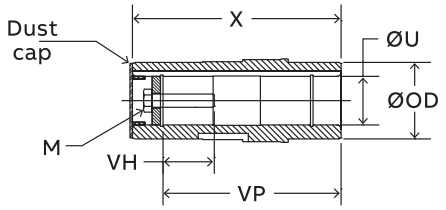

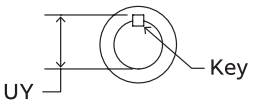

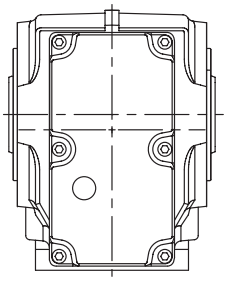

B14 Output flange

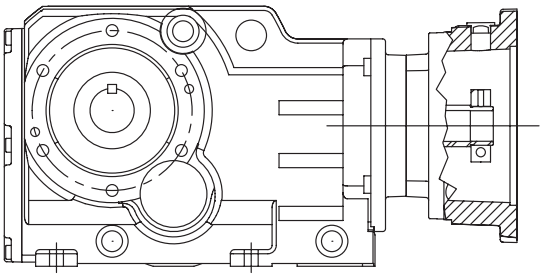

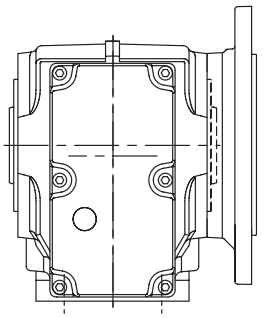

B5 Output flange

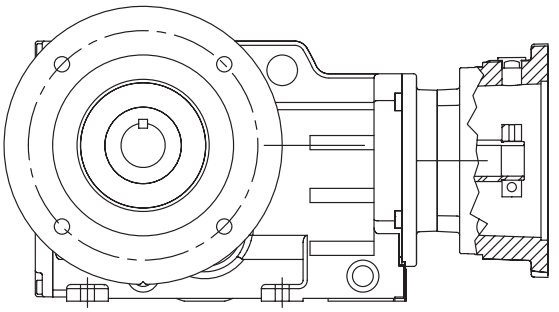

	Standard inch hollow output						Standard metric hollow output					
	Ø U	Tol.	UY	VH	Key	M-Tap	Ø U	Tol.	UY	VH	Key	M-Tap
38	1.250	+0.0010 +0.0004	1.38	1.47	1/4 x 1/4 x 1-7/8	3/8-16 X 1-3/4 UNC	30	+0.020 +0.007	33	31	8 x 7 x 40	M10 x 40
48	1.375	+0.0010 +0.0004	1.53	1.45	5/16 x 5/16 x 2-3/16	3/8-16 X 1-3/4 UNC	35	+0.025 +0.009	38	43	10 x 8 x 45	M10 x 50
58	1.500	+0.0010 +0.0004	1.68	2.05	3/8 x 3/8 x 3-1/8	5/8-11 X 2-1/4 UNC	40	+0.025 +0.009	43	48	12 x 8 x 50	M16 x 60
68	1.500	+0.0010 +0.0004	1.68	2.05	3/8 x 3/8 x 3-1/8	5/8-11 X 2-1/4 UNC	40	+0.025 +0.009	43	48	12 x 8 x 50	M16 x 60
88	2.000	+0.0012 +0.0004	2.23	1.89	1/2 x 1/2 x 3-15/16	3/4-10 X 2-1/4 UNC	50	+0.029 +0.010	54	48	14 x 9 x 80	M16 x 36
108	2.375	+0.0012 +0.0004	2.66	2.53	5/8 x 5/8 x 4-1/16	3/4-10 X 3 UNC	60	+0.029 +0.010	64	68	18 x 11 x 100	M20 x 80
128	2.750	+0.0012 +0.0004	3.04	2.51	5/8 x 5/8 x 6-1/8	3/4-10 X 3 UNC	70	+0.029 +0.010	75	68	20 x 12 x 110	M20 x 80
148	3.625	+0.0012 +0.0004	3.84	2.31	7/8 x 7/8 x 7-1/16	1-8 X 2-1/2 UNC	80	+0.034 +0.012	85	68	22 x 14 x 125	M20 x 85
168	4.000	+0.0014 +0.0005	4.45	2.29	1 x 1 x 5-7/8	1-8 X 2-1/2 UNC	100	+0.034 +0.012	106	77	28 x 16 x 160	M24 x 95

See page RHB-205 for optional hollow bore sizes

Gearcase dimensions

BF_3C_
BF_3L_

C-face – flange mounted – straight hollow bore

Triple reduction

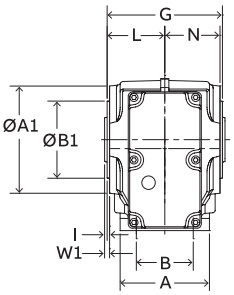

B14 Output flange

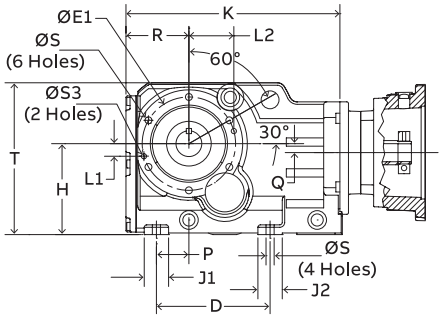

B14 Output flange
Sizes 38-128

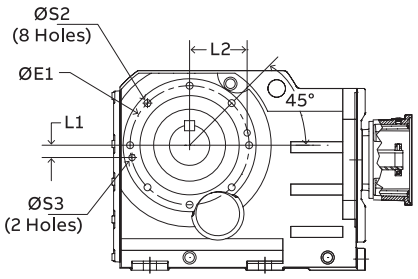

B14 Output flange
Sizes 148-168

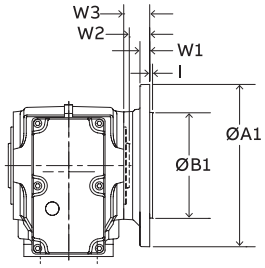

B5 Output flange

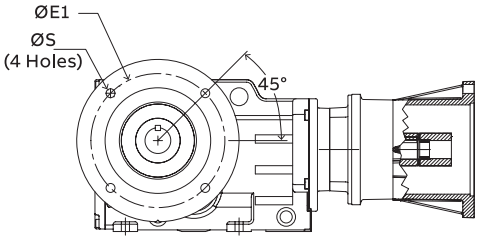

B5 Output flange
Sizes 38-108

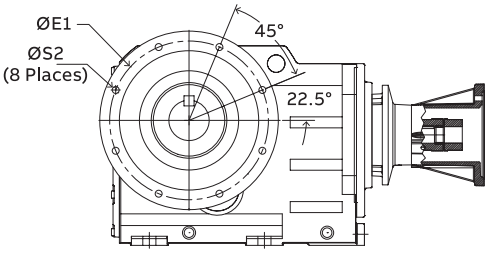

B5 Output flange
Sizes 128-168

	Mounting dimensions							Outline dimensions										
	B	D	H	X	VP	Ø OD	Ø S	A	K	G	L	N	P	Q	R	T	J1	J2
38	2.36	4.61	3.94	4.72	4.02	1.77	M10 X 0.67	3.94	9.21	4.49	2.36	2.24	1.38	0.37	2.76	6.58	1.26	1.26
48	2.76	5.51	4.41	5.91	5.04	2.17	M10 X 0.66	4.33	10.37	5.59	2.80	2.68	1.58	0.43	3.05	7.36	1.18	1.18
58	3.46	5.98	5.20	6.54	5.59	2.17	M12 X 0.93	5.20	11.48	6.30	3.15	2.99	1.85	0.39	3.33	8.63	2.06	2.08
68	3.46	5.98	5.51	7.09	5.91	2.56	M12 X 0.93	5.51	12.15	6.77	3.39	3.25	1.65	0.26	3.48	9.09	1.97	1.97
88	4.53	6.69	7.09	8.27	7.09	3.15	M16 X 1.10	6.69	14.64	7.87	3.80	3.94	1.89	0.79	4.33	11.61	2.17	2.17
108	6.57	8.86	8.35	9.45	8.19	3.74	M16 X 1.10	8.27	18.24	9.06	4.53	4.37	2.56	0.51	5.33	13.58	2.76	2.76
128	8.39	9.76	10.43	11.81	10.35	4.33	M20 X 1.33	10.04	20.77	11.42	5.71	5.55	3.27	0.79	6.16	16.65	3.15	3.15
148	8.27	11.42	12.40	13.78	12.20	4.72	M24 X 1.61	11.26	24.31	13.31	6.65	6.46	3.94	1.46	7.71	19.80	3.54	3.54
168	9.45	13.78	14.76	16.14	14.41	5.91	M30 x 1.57	12.76	28.29	15.67	7.84	7.64	4.53	1.97	8.68	23.62	4.33	4.33

	B14 mounting dimensions									B5 mounting dimensions							
	Ø A1	Ø B1	Ø E1	Ø S2	I	W1	Ø S3	L1	L2	Ø A1	Ø B1	Ø E1	Ø S2	I	W1	W2	W3
38	4.72	3.1497	3.94	M8 X 0.55	0.12	0.24	–	–	–	6.30	4.3308	5.12	0.35	0.14	0.39	0.95	1.18
48	5.20	3.7402	4.53	M10 X 0.66	0.12	0.29	–	–	–	7.87	5.1182	6.50	0.43	0.14	0.47	0.97	1.26
58	5.91	4.3308	5.12	M12 X 0.82	0.14	0.29	–	–	–	9.84	7.0867	8.47	0.53	0.16	0.59	0.90	1.20
68	5.91	4.3308	5.12	M12 X 0.82	0.14	0.30	–	–	–	9.84	7.0867	8.47	0.53	0.16	0.59	0.90	1.20
88	7.48	5.1182	6.50	M12 X 0.82	0.14	0.34	–	–	–	11.81	9.0552	10.43	0.53	0.16	0.63	1.46	1.79
108	9.65	7.0867	8.47	M16 X 1.10	0.16	0.35	0.47	1.10	4.06	13.78	9.8419	11.81	0.69	0.20	0.71	1.42	1.77
128	11.61	9.0552	10.43	M16 X 1.10	0.16	0.35	0.47	1.69	4.92	17.71	13.7788	15.75	0.69	0.20	0.87	1.63	1.99
148	13.19	9.8419	11.81	M20 X 1.33	0.20	0.43	0.63	1.22	5.71	17.71	13.7788	15.75	0.69	0.20	0.87	1.61	2.05
168	15.75	11.8104	13.78	M20 X 1.33	0.20	0.43	0.63	1.46	3.73	21.65	17.7157	19.69	0.69	0.20	0.98	2.01	2.44

Clamp collar – NEMA/IEC dimensions

BF_3CN_
BF_3CI_

C-face - flange mounted - straight hollow bore

Triple reduction

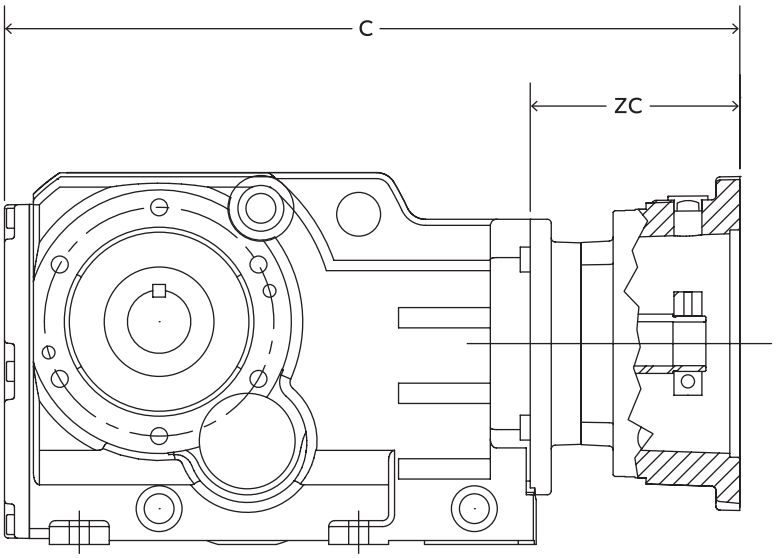

NEMA clamp collar motor dimensions

Reducer size	Reducer stage	56C		140TC		180TC		210TC		250TC		280TC		320TC		360TC	
		C	ZC	C	ZC	C	ZC	C	ZC	C	ZC	C	ZC	C	ZC	C	ZC
38	3	12.71	3.50	13.38	4.17	13.70	4.49	–	–	–	–	–	–	–	–	–	–
48	3	13.87	3.50	14.54	4.17	14.86	4.49	–	–	–	–	–	–	–	–	–	–
58	3	14.69	3.21	15.36	3.88	16.44	4.96	–	–	–	–	–	–	–	–	–	–
68	3	15.44	3.29	16.11	3.96	17.69	5.54	17.38	5.33	–	–	–	–	–	–	–	–
88	3	17.72	3.08	18.38	3.74	19.88	5.24	21.77	7.13	20.70	6.13	–	–	–	–	–	–
108	3	–	–	21.41	3.17	22.77	4.53	24.66	6.42	24.60	6.36	25.04	6.88	–	–	–	–
128	3	–	–	23.41	2.64	24.72	3.95	26.62	5.85	26.60	5.83	27.40	6.63	28.64	8.01	–	–
148	3	–	–			27.89	3.58	29.74	5.43	29.48	5.17	30.40	6.09	31.99	7.68	33.25	9.41
168	3	–	–			–	–	33.41	5.12	33.16	4.87	34.08	5.79	35.69	7.40	37.40	9.11

IEC clamp collar motor dimensions

Reducer size	Reducer stage	71D		80D		90D		100D		112D		132D		160D		180D		200D	
		C	ZC	C	ZC	C	ZC	C	ZC	C	ZC	C	ZC	C	ZC	C	ZC	C	ZC
38	3	11.97	2.76	12.91	3.70	12.91	3.70	13.21	4.00	–	–	–	–	–	–	–	–	–	–
48	3	13.13	2.76	14.07	3.70	14.07	3.70	14.37	4.00	–	–	–	–	–	–	–	–	–	–
58	3	13.98	2.50	14.93	3.45	14.93	3.45	15.22	3.74	15.55	4.07	–	–	–	–	–	–	–	–
68	3	14.69	2.54	15.63	3.48	15.63	3.48	15.93	3.78	16.26	4.11	–	–	–	–	–	–	–	–
88	3	16.95	2.31	17.89	3.25	17.89	3.25	18.19	3.55	18.44	3.80	20.06	5.42	–	–	–	–	–	–
108	3	–	–	20.90	2.66	20.90	2.66	21.09	2.85	21.31	3.07	22.93	4.69	24.63	6.39	–	–	–	–
128	3	–	–	–	–	22.97	2.20	23.15	2.38	23.39	2.62	24.96	4.19	26.70	5.93	27.23	6.46	27.62	6.85
148	3	–	–	–	–	–	–	26.32	2.01	26.51	2.20	28.09	3.78	29.59	5.28	30.24	5.93	30.63	6.32
168	3	–	–	–	–	–	–	–	–	–	–	31.75	3.46	33.27	4.98	33.92	5.63	34.31	6.02

Three-piece coupled – NEMA/IEC dimensions

BF_3LN_
BF_3LI_

C-face – flange mounted – straight hollow bore

Triple reduction

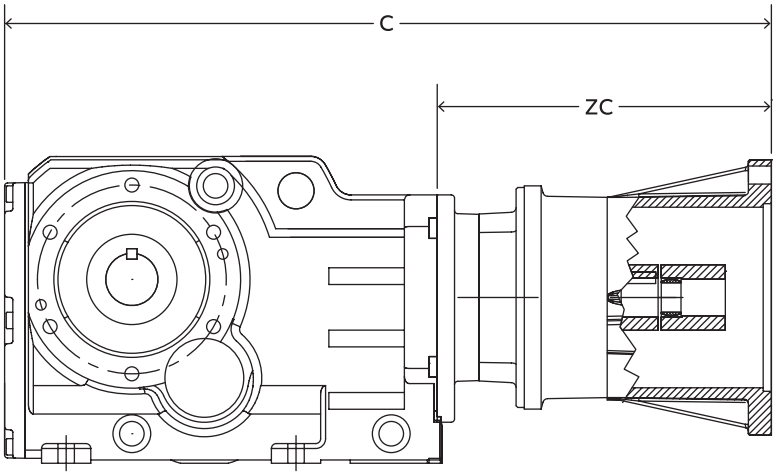

NEMA Three-piece coupled motor dimensions

Reducer size	Reducer stage	56C		140TC		180TC		210TC		250TC		280TC		320TC		360TC	
		C	ZC	C	ZC	C	ZC	C	ZC	C	ZC	C	ZC	C	ZC	C	ZC
38	3	15.80	6.59	17.22	8.01	–	–	–	–	–	–	–	–	–	–	–	–
48	3	16.97	6.59	18.39	8.01	–	–	–	–	–	–	–	–	–	–	–	–
58	3	17.82	6.34	19.24	7.76	20.03	8.55	–	–	–	–	–	–	–	–	–	–
68	3	18.53	6.38	19.95	7.80	21.22	9.07	–	–	–	–	–	–	–	–	–	–
88	3	20.79	6.15	22.20	7.56	23.40	8.76	25.55	10.91	–	–	–	–	–	–	–	–
108	3	–	–	25.21	6.97	26.27	8.03	28.42	10.18	30.37	12.13	–	–	–	–	–	–
128	3	–	–	27.29	6.52	28.44	7.68	30.45	9.69	32.44	11.67	35.14	14.37	–	–	–	–
148	3	–	–	–	–	31.61	7.30	33.58	9.27	35.33	11.02	38.15	13.84	40.65	16.34	–	–
168	3	–	–	–	–	–	–	37.25	8.96	39.02	10.73	41.83	13.54	44.33	16.04	45.38	17.09

IEC Three-piece coupled motor dimensions

Reducer size	Reducer stage	71D		80D		90D		100D		112D		132D		160D		180D		200D		225D		250D	
		C	ZC	C	ZC	C	ZC	C	ZC	C	ZC	C	ZC	C	ZC	C	ZC	C	ZC	C	ZC	C	ZC
38	3	–	–	17.14	7.93	17.14	7.93	18.03	8.82	–	–	–	–	–	–	–	–	–	–	–	–	–	–
48	3	–	–	18.30	7.93	18.30	7.93	19.19	8.82	–	–	–	–	–	–	–	–	–	–	–	–	–	–
58	3	–	–	19.16	7.68	19.16	7.68	20.05	8.57	20.00	8.52	–	–	–	–	–	–	–	–	–	–	–	–
68	3	–	–	19.87	7.72	19.87	7.72	20.75	8.60	20.71	8.56	–	–	–	–	–	–	–	–	–	–	–	–
88	3	–	–	22.12	7.48	22.12	7.48	23.01	8.37	22.89	8.25	25.31	10.67	–	–	–	–	–	–	–	–	–	–
108	3	–	–	25.13	6.89	25.13	6.89	25.92	7.68	25.76	7.52	28.18	9.94	30.80	12.56	–	–	–	–	–	–	–	–
128	3	–	–	–	–	27.20	6.43	27.97	7.20	27.84	7.07	30.22	9.45	32.87	12.10	34.86	14.09	37.90	14.13	–	–	–	–
148	3	–	–	–	–	–	–	31.14	6.83	30.96	6.65	33.35	9.04	35.77	11.46	37.87	13.56	37.91	13.60	41.20	16.89	–	–
168	3	–	–	–	–	–	–	–	–	–	–	37.01	8.72	39.45	11.16	41.56	13.27	41.60	13.31	44.88	16.59	45.06	16.77

Output shaft dimensions

C-face – flange mounted – straight hollow bore

Four- and five-stage reduction

BF_4C_
BF_5C_
BF_4L_
BF_5L_

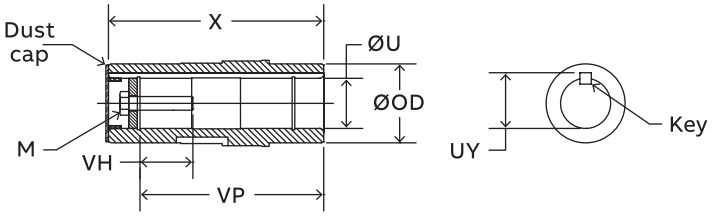

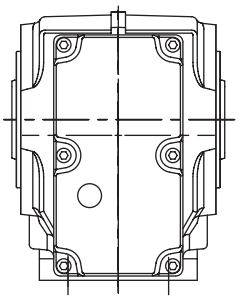

B14 Output flange

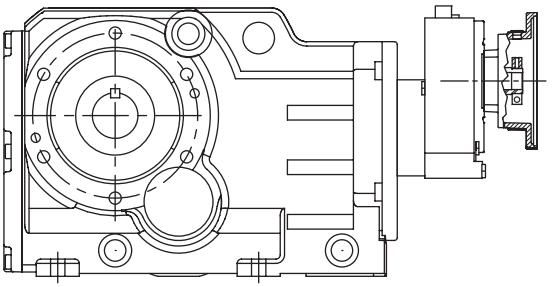

4 Stage reduction

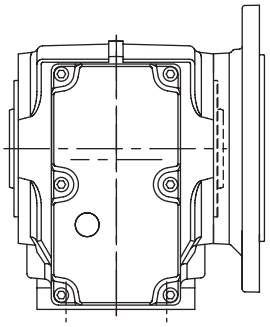

B5 Output flange

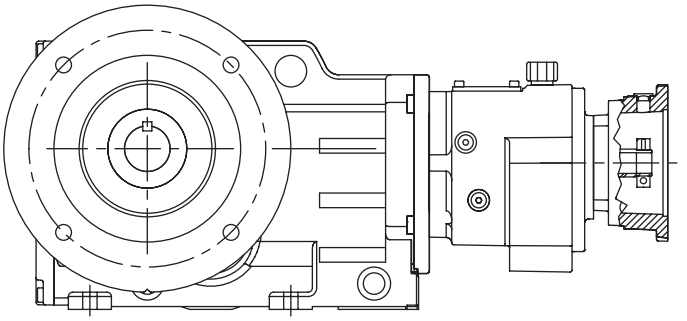

5 Stage reduction

	Standard inch hollow output						Standard metric hollow output					
	Ø U	Tol.	UY	VH	Key	M-Tap	Ø U	Tol.	UY	VH	Key	M-Tap
48	1.375	+0.0010 +0.0004	1.53	1.45	5/16 x 5/16 x 2-3/16	3/8-16 X 1-3/4 UNC	35	+0.025 +0.009	38	43	10 x 8 x 45	M10 x 50
68	1.500	+0.0010 +0.0004	1.68	2.05	3/8 x 3/8 x 3-1/8	5/8-11 X 2-1/4 UNC	40	+0.025 +0.009	43	48	12 x 8 x 50	M16 x 60
88	2.000	+0.0012 +0.0004	2.23	1.89	1/2 x 1/2 x 3-15/16	3/4-10 X 2-1/4 UNC	50	+0.029 +0.010	54	48	14 x 9 x 80	M16 x 36
108	2.375	+0.0012 +0.0004	2.66	2.53	5/8 x 5/8 x 4-1/16	3/4-10 X 3 UNC	60	+0.029 +0.010	64	68	18 x 11 x 100	M20 x 80
128	2.750	+0.0012 +0.0004	3.04	2.51	5/8 x 5/8 x 6-1/8	3/4-10 X 3 UNC	70	+0.029 +0.010	75	68	20 x 12 x 110	M20 x 80
148	3.625	+0.0012 +0.0004	3.84	2.31	7/8 x 7/8 x 7-1/16	1-8 X 2-1/2 UNC	80	+0.034 +0.012	85	68	22 x 14 x 125	M20 x 85
168	4.000	+0.0014 +0.0005	4.45	2.29	1 x 1 x 5-7/8	1-8 X 2-1/2 UNC	100	+0.034 +0.012	106	77	28 x 16 x 160	M24 x 95

See page RHB-205 for optional hollow bore sizes

Gearcase dimensions

C-face – flange mounted – straight hollow bore

Four- and five-stage reduction

BF_4C_
BF_5C_
BF_4L_
BF_5L_

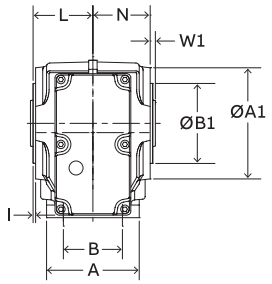

B14 Output flange
Sizes 38-168

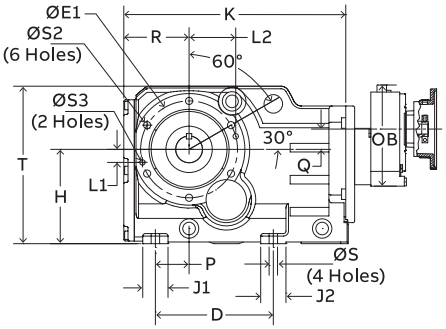

B14 Output flange
Sizes 38-128

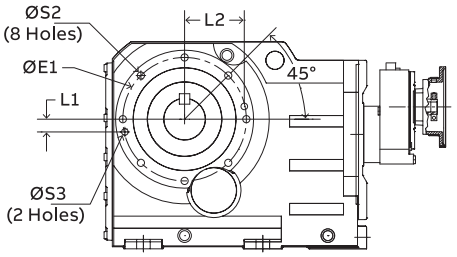

B14 Output flange
Sizes 148-168

4 Stage reduction

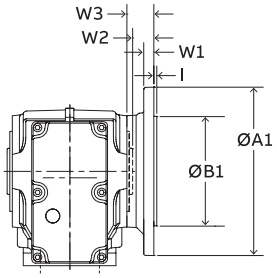

B5 Output flange
Sizes 38-168

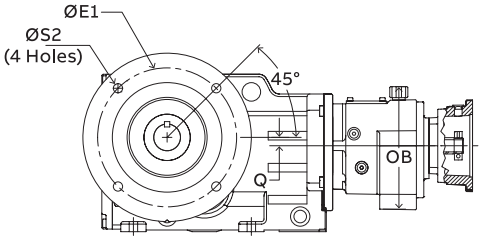

B5 Output flange
Sizes 38-108

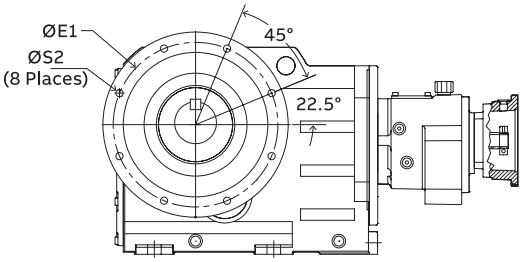

B5 Output flange
Sizes 128-168

5 Stage reduction

	Mounting dimensions				Outline dimensions									4 stage		5 stage	
	B	D	H	Ø S	A	K	L	N	P	R	T	J1	J2	Q	OB	Q	OB
48	2.76	5.51	4.41	M10 X 0.66	4.33	10.37	2.80	2.68	1.58	3.05	7.36	1.18	1.18	1.50	7.83	0.43	6.26
68	3.46	5.98	5.51	M12 X 0.93	5.51	12.15	3.39	3.25	1.65	3.48	9.09	1.97	1.97	1.67	7.83	0.26	6.29
88	4.53	6.69	7.09	M16 X 1.10	6.69	14.64	3.80	3.94	1.89	4.33	11.61	2.17	2.17	1.14	7.83	0.79	6.29
108	6.57	8.86	8.35	M16 X 1.10	8.27	18.24	4.53	4.37	2.56	5.33	13.58	2.76	2.76	2.03	9.84	0.51	8.86
128	8.39	9.76	10.43	M20 X 1.33	10.04	20.77	5.71	5.55	3.27	6.16	16.65	3.15	3.15	1.77	9.84	0.79	8.86
148	8.27	11.42	12.40	M24 X 1.61	11.26	24.31	6.65	6.46	3.94	7.71	19.80	3.54	3.54	1.61	11.57	1.46	8.86
168	9.45	13.78	14.76	M30 x 1.57	12.76	28.29	7.84	7.64	4.53	8.68	23.62	4.33	4.33	1.10	11.57	1.97	10.68

	B14 mounting dimensions									B5 mounting dimensions							
	Ø A1	Ø B1	Ø E1	Ø S2	I	W1	Ø S3	L1	L2	Ø A1	Ø B1	Ø E1	Ø S2	I	W1	W2	W3
48	5.20	3.7402	4.53	M10 X 0.66	0.12	0.29	–	–	–	7.87	5.1182	6.50	0.43	0.14	0.47	0.97	1.26
68	5.91	4.3308	5.12	M12 X 0.82	0.14	0.30	–	–	–	9.84	7.0867	8.47	0.53	0.16	0.59	0.90	1.20
88	7.48	5.1182	6.50	M12 X 0.82	0.14	0.34	–	–	–	11.81	9.0552	10.43	0.53	0.16	0.63	1.46	1.79
108	9.65	7.0867	8.47	M16 X 1.10	0.16	0.35	0.47	1.10	4.06	13.78	9.8419	11.81	0.69	0.20	0.71	1.42	1.77
128	11.61	9.0552	10.43	M16 X 1.10	0.16	0.35	0.47	1.69	4.92	17.71	13.7788	15.75	0.69	0.20	0.87	1.63	1.99
148	13.19	9.8419	11.81	M20 X 1.33	0.20	0.43	0.63	1.22	5.71	17.71	13.7788	15.75	0.69	0.20	0.87	1.61	2.05
168	15.75	11.8104	13.78	M20 X 1.33	0.20	0.43	0.63	1.46	3.73	21.65	17.7157	19.69	0.69	0.20	0.98	2.01	2.44

Clamp collar – NEMA/IEC dimensions

C-face – flange mounted – straight hollow bore

Four- and five-stage reduction

BF_4CN_
BF_5CN_
BF_4CI_
BF_5CI_

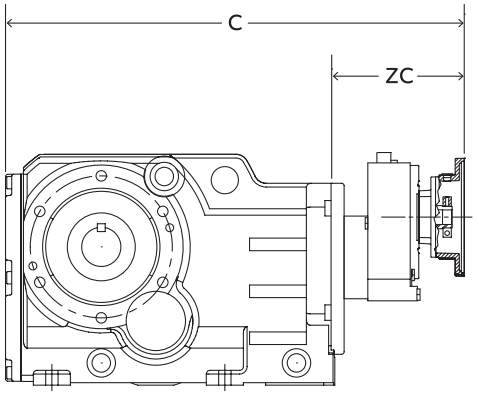

4 Stage reduction

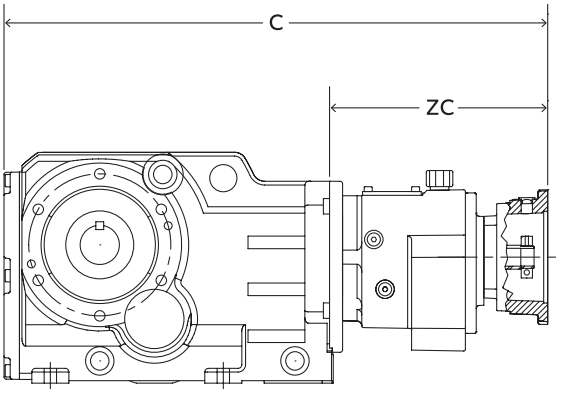

5 Stage reduction

NEMA clamp collar motor dimensions

Reducer size	Reducer stage	56C		140TC		180TC		210TC	
		C	ZC	C	ZC	C	ZC	C	ZC
48	4	18.82	8.45	19.52	9.15	19.82	9.45	–	–
	5	19.97	9.60	20.64	10.27	20.97	10.60	–	–
68	4	20.21	8.06	20.91	8.76	21.21	9.06	–	–
	5	21.36	9.21	22.03	9.88	22.36	10.21	–	–
88	4	22.64	8.00	23.34	8.70	23.64	9.00	–	–
	5	23.79	9.15	24.46	9.82	24.79	10.15	–	–
108	4	26.06	7.82	26.66	8.42	28.26	10.02	–	–
	5	28.40	10.16	29.07	10.83	30.64	12.40	–	–
128	4	28.91	8.14	29.51	8.74	31.11	10.34	–	–
	5	30.78	10.01	31.45	10.68	33.02	12.25	–	–
148	4	32.87	8.56	33.57	9.26	35.07	10.76	36.97	12.66
	5	34.11	9.80	34.78	10.47	36.35	12.04	–	–
168	4	36.70	8.41	37.40	9.11	38.90	10.61	40.80	12.51
	5	39.92	11.63	40.59	12.30	42.09	13.80	44.01	15.72

IEC clamp collar motor dimensions

Reducer size	Reducer stage	71D		80D		90D		100D		112D		132D	
		C	ZC	C	ZC	C	ZC	C	ZC	C	ZC	C	ZC
48	4	18.12	7.75	19.02	8.65	19.02	8.65	19.32	8.95	–	–	–	–
	5	19.26	8.89	20.20	9.83	20.20	9.83	20.50	10.13	–	–	–	–
68	4	19.51	7.36	20.41	8.26	20.41	8.26	20.71	8.56	–	–	–	–
	5	20.65	8.50	21.59	9.44	21.59	9.44	21.89	9.74	–	–	–	–
88	4	21.94	7.30	22.84	8.20	22.84	8.20	23.14	8.50	–	–	–	–
	5	23.08	8.44	24.02	9.38	24.02	9.38	24.32	9.68	–	–	–	–
108	4	25.36	7.12	26.26	8.02	26.26	8.02	26.56	8.32	26.86	8.62	–	–
	5	27.69	9.45	28.64	10.40	28.64	10.40	28.93	10.69	29.27	11.03	–	–
128	4	28.21	7.44	29.11	8.34	29.11	8.34	29.41	8.64	29.71	8.94	–	–
	5	30.07	9.30	31.02	10.25	31.02	10.25	31.31	10.54	31.65	10.88	–	–
148	4	32.17	7.86	33.17	8.86	33.17	8.86	33.47	9.16	33.67	9.36	35.27	10.96
	5	33.40	9.09	34.35	10.04	34.35	10.04	34.64	10.33	34.98	10.67	–	–
168	4	36.00	7.71	37.00	8.71	37.00	8.71	37.30	9.01	37.50	9.21	39.10	10.81
	5	39.21	10.92	40.16	11.87	40.16	11.87	40.45	12.16	40.71	12.42	42.32	14.03

Three-piece coupled – NEMA/IEC dimensions

C-face – flange mounted – straight hollow bore

Four- and five-stage reduction

BF_4LN_
BF_5LN_
BF_4LI_
BF_5LI_

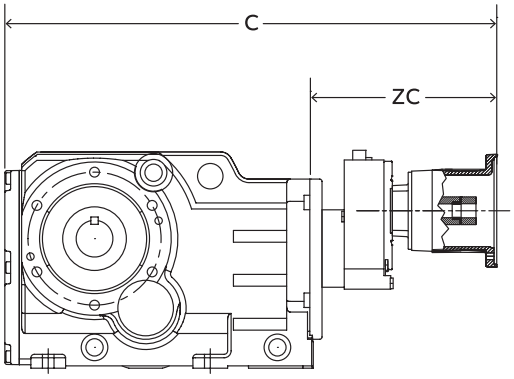

4 Stage reduction

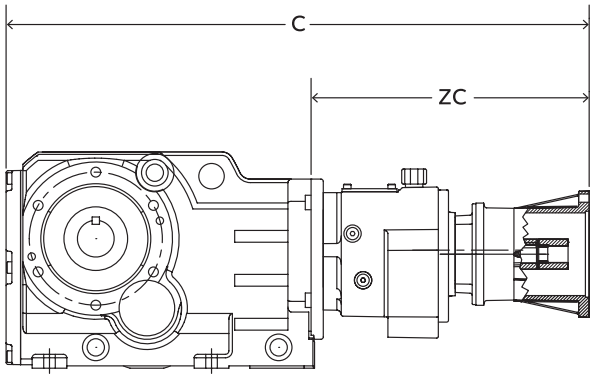

5 Stage reduction

NEMA Three-piece coupled motor dimensions

Reducer size	Reducer stage	56C		140TC		180TC		210TC	
		C	ZC	C	ZC	C	ZC	C	ZC
48	4	21.92	11.55	23.32	12.95	–	–	–	–
	5	23.10	12.73	24.51	14.14	–	–	–	–
68	4	23.31	11.16	24.71	12.56	–	–	–	–
	5	24.49	12.34	25.90	13.75	–	–	–	–
88	4	25.74	11.10	27.14	12.50	–	–	–	–
	5	26.92	12.28	28.33	13.69	–	–	–	–
108	4	29.16	10.92	30.56	12.32	31.86	13.62	–	–
	5	31.53	13.29	32.95	14.71	34.23	15.99	–	–
128	4	32.01	11.24	33.41	12.64	34.71	13.94	–	–
	5	33.91	13.14	35.33	14.56	36.61	15.84	–	–
148	4	36.07	11.76	37.47	13.16	38.67	14.36	40.57	16.26
	5	37.24	12.93	38.66	14.35	39.94	15.63	–	–
168	4	39.90	11.61	41.30	13.01	42.50	14.21	44.40	16.11
	5	43.05	14.76	44.47	16.18	45.67	17.38	47.82	19.53

IEC Three-piece coupled motor dimensions

Reducer size	Reducer stage	71D		80D		90D		100D		112D		132D	
		C	ZC	C	ZC	C	ZC	C	ZC	C	ZC	C	ZC
48	4	–	–	23.32	12.95	23.32	12.95	24.12	13.75	–	–	–	–
	5	–	–	24.43	14.06	24.43	14.06	25.32	14.95	–	–	–	–
68	4	–	–	24.71	12.56	24.71	12.56	25.51	13.36	–	–	–	–
	5	–	–	25.82	13.67	25.82	13.67	26.71	14.56	–	–	–	–
88	4	–	–	27.14	12.50	27.14	12.50	27.94	13.30	–	–	–	–
	5	–	–	28.25	13.61	28.25	13.61	29.14	14.50	–	–	–	–
108	4	–	–	30.46	12.22	30.46	12.22	31.36	13.12	31.36	13.12	–	–
	5	–	–	32.87	14.63	32.87	14.63	33.75	15.51	33.71	15.47	–	–
128	4	–	–	33.31	12.54	33.31	12.54	34.21	13.44	34.21	13.44	–	–
	5	–	–	35.25	14.48	35.25	14.48	36.13	15.36	36.09	15.32	–	–
148	4	–	–	–	–	37.37	13.06	38.27	13.96	38.17	13.86	40.57	16.26
	5	–	–	38.58	14.27	38.58	14.27	39.46	15.15	39.42	15.11	–	–
168	4	–	–	–	–	41.20	12.91	42.10	13.81	42.00	13.71	44.40	16.11
	5	–	–	44.39	16.10	44.39	16.10	45.28	16.99	45.16	16.87	47.58	19.29

Output shaft dimensions

Separate – foot mounted – straight hollow bore

Triple reduction

BB_3SI_
BB_3SM_

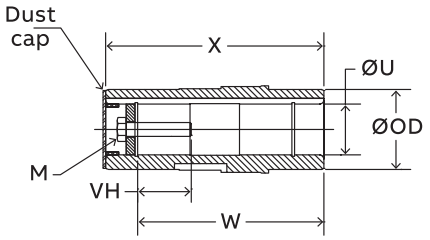

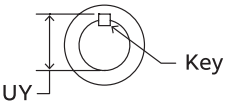

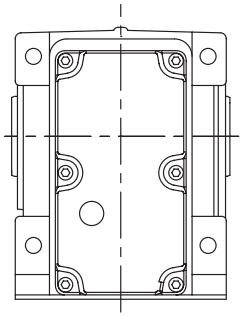

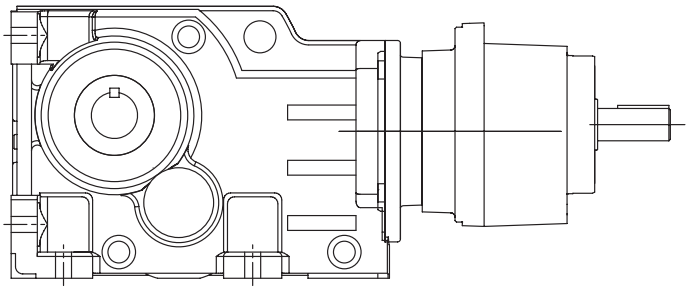

	Standard inch hollow output						Standard metric hollow output					
	Ø U	Tol.	UY	VH	Key	M-Tap	Ø U	Tol.	UY	VH	Key	M-Tap
38	1.250	+0.0010 +0.0004	1.38	1.47	1/4 x 1/4 x 1-7/8	3/8-16 X 1-3/4 UNC	30	+0.020 +0.007	33	31	8 x 7 x 40	M10 x 40
48	1.375	+0.0010 +0.0004	1.53	1.45	5/16 x 5/16 x 2-3/16	3/8-16 X 1-3/4 UNC	35	+0.025 +0.009	38	43	10 x 8 x 45	M10 x 50
58	1.500	+0.0010 +0.0004	1.68	2.05	3/8 x 3/8 x 3-1/8	5/8-11 X 2-1/4 UNC	40	+0.025 +0.009	43	48	12 x 8 x 50	M16 x 60
68	1.500	+0.0010 +0.0004	1.68	2.05	3/8 x 3/8 x 3-1/8	5/8-11 X 2-1/4 UNC	40	+0.025 +0.009	43	48	12 x 8 x 50	M16 x 60
88	2.000	+0.0012 +0.0004	2.23	1.89	1/2 x 1/2 x 3-15/16	3/4-10 X 2-1/4 UNC	50	+0.029 +0.010	54	48	14 x 9 x 80	M16 x 36
108	2.375	+0.0012 +0.0004	2.66	2.53	5/8 x 5/8 x 4-1/16	3/4-10 X 3 UNC	60	+0.029 +0.010	64	68	18 x 11 x 100	M20 x 80
128	2.750	+0.0012 +0.0004	3.04	2.51	5/8 x 5/8 x 6-1/8	3/4-10 X 3 UNC	70	+0.029 +0.010	75	68	20 x 12 x 110	M20 x 80
148	3.625	+0.0012 +0.0004	3.84	2.31	7/8 x 7/8 x 7-1/16	1-8 X 2-1/2 UNC	80	+0.034 +0.012	85	68	22 x 14 x 125	M20 x 85
168	4.000	+0.0014 +0.0005	4.45	2.29	1 x 1 x 5-7/8	1-8 X 2-1/2 UNC	100	+0.034 +0.012	106	77	28 x 16 x 160	M24 x 95

See page RHB-205 for optional hollow bore sizes

Gearcase dimensions

BB_3SI_
BB_3SM_

Separate – foot mounted – straight hollow bore
Triple reduction

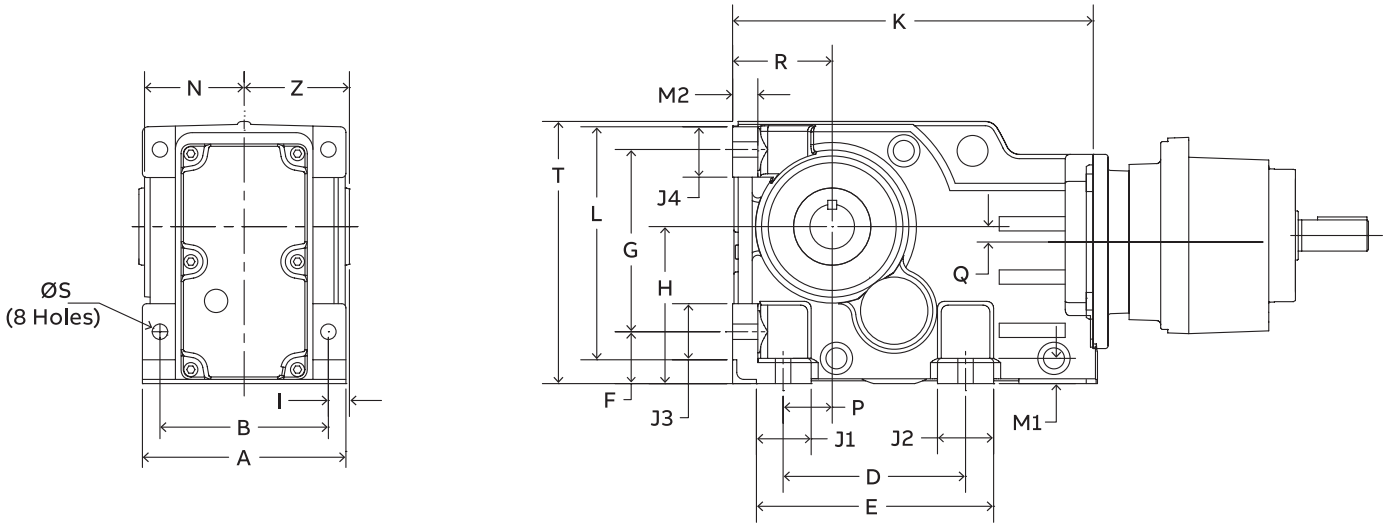

	Mounting dimensions										
	A	B	D	E	F	G	H	I	Ø S	VP	Z
38	4.72	3.94	4.33	5.55	1.26	4.53	3.94	0.39	0.43	4.02	2.36
48	5.71	4.72	5.12	6.65	1.45	5.12	4.41	0.59	0.43	5.04	2.95
58	6.30	5.12	5.12	6.78	1.77	5.91	5.20	0.72	0.53	5.59	3.28
68	6.69	5.51	4.72	6.69	1.77	6.30	5.51	0.79	0.53	5.91	3.54
88	7.87	6.50	5.91	8.07	2.17	7.87	7.09	0.89	0.71	7.09	4.13
108	9.06	7.09	7.09	10.04	2.76	9.17	8.35	1.18	0.87	8.19	4.72
128	11.42	9.45	9.45	12.60	2.95	11.61	10.43	1.18	1.02	10.35	5.91
148	13.39	10.63	11.02	15.20	3.74	14.17	12.40	1.58	1.30	12.20	6.89
168	15.75	12.99	13.78	18.11	4.33	16.54	14.76	1.58	1.54	14.41	8.07

	Outline dimensions														
	J1	J2	J3	J4	M1	M2	K	P	L	N	R	T	Q	Ø OD	X
38	1.38	1.26	1.30	1.22	0.63	0.63	8.94	1.10	5.79	2.28	2.48	6.58	0.37	1.77	4.72
48	1.54	1.58	1.58	1.42	0.71	0.71	10.12	1.38	6.54	2.80	2.80	7.36	0.43	2.17	5.91
58	1.68	1.68	1.96	1.79	0.81	0.73	11.3	1.18	7.72	3.15	3.15	8.58	0.39	2.17	6.54
68	1.97	1.97	1.97	1.89	0.87	0.87	12.21	1.18	8.19	3.39	3.54	9.09	0.26	2.56	7.09
88	2.17	2.17	2.17	2.56	0.98	0.98	14.72	1.58	10.31	3.94	4.41	11.61	0.79	3.15	8.27
108	2.76	3.15	2.76	2.91	1.18	1.18	18.11	2.17	12.09	4.53	5.20	13.58	0.51	3.74	9.45
128	3.15	3.15	3.15	3.54	1.38	1.38	20.91	2.95	15.09	5.71	6.30	16.65	0.79	4.33	11.81
148	3.54	4.17	3.54	3.50	1.58	1.58	24.49	3.74	17.67	6.65	7.87	19.80	1.46	4.72	13.78
168	4.33	4.33	4.33	4.33	1.77	1.77	28.47	4.53	20.87	7.84	8.86	23.62	1.97	5.91	16.14

Separate input shaft dimensions

Separate – foot mounted – straight hollow bore

Triple reduction

BB_3SI_
BB_3SM_

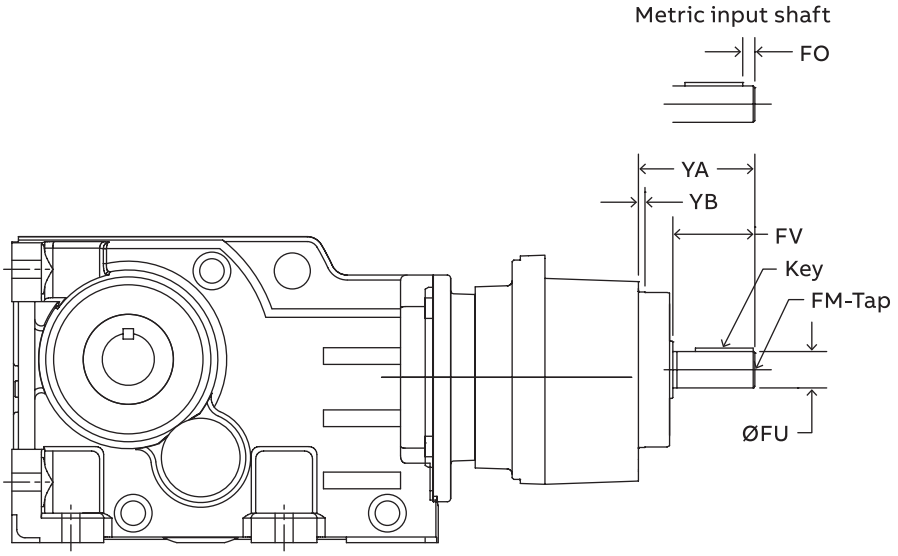

	Separate input mounting dimensions							
	Ø FU	Tol	FO	FV	YA	YB	FM x Depth	Key
71	0.625	+0.0000 -0.0005	–	1.57	2.40	0.16	8-32 UNC x 0.49	3/16 x 3/16 x 1-5/16
	16	+0.012 +0.001	4	40			M5 x 12.5	5 x 5 x 32
80	0.750	+0.0000 -0.0005	–	1.57	2.40	0.16	1/4-20 UNC x 0.63	3/16 x 3/16 x1-5/16
	19	+0.015 +0.002	4	10			M6 x 16	6 x 6 x 32
90	0.875	+0.0000 -0.0005	–	1.97	2.80	0.16	5/16-18 UNC x 0.75	3/16 x 3/16 x 1-5/8
	24	+0.015 +0.002	5	50			M8 x 19	8 x 7 x 40
100	1.125	+0.0000 -0.0005	–	2.36	3.27	0.16	3/8-16 UNC x 0.87	1/4 x 1/4 x 2
	28	+0.015 +0.002	5	60			M10 x 22	8 x 7 x 50
112	1.250	+0.0000 -0.0005	–	2.36	3.27	0.16	3/8-16 UNC x 0.87	1/4 x 1/4 x 2
	28	+0.015 +0.002	5	60			M10 x 22	8 x 7 x 50
132	1.375	+0.0000 -0.0005	–	3.15	6.61	0.14	3/8-16 UNC x 1.10	5/16 x 5/16 x 2-3/4
	38	+0.018 +0.002	5	80			M12 x 28	10 x 8 x 70
160	1.625	+0.0000 -0.0010	–	4.33	8.46	0.14	5/8-11 UNC x 1.42	3/8 x 3/8 x 3-1/2
	42	+0.018 +0.002	10	110			M16 x 36	12 x 8 x 90
180	2.125	+0.0000 -0.0010	–	4.33	9.25	0.20	3/4-10 UNC x 1.65	1/2 x 1/2 x 3-5/8
	55	+0.030 +0.011	10	110			M20 x 42	16 x 10 x 90
225	2.125	+0.0000 -0.0010	–	4.33	9.05	0.20	3/4-10 UNC x 1.65	1/2 x 1/2 x 3-5/8
	60	+0.030 +0.011	15	140			M20 x 42	18 x 11 x 110
250	2.375	+0.0000 -0.0010	–	5.51	10.20	0.20	3/4-10 UNC x 1.65	5/8 x 5/8 x 4-3/8
	65	+0.030 +0.011	15	140			M20 x 42	18 x 11 x 110

Separate input shaft dimensions

BB_3SI_
BB_3SM_

Separate – foot mounted – straight hollow bore

Triple reduction

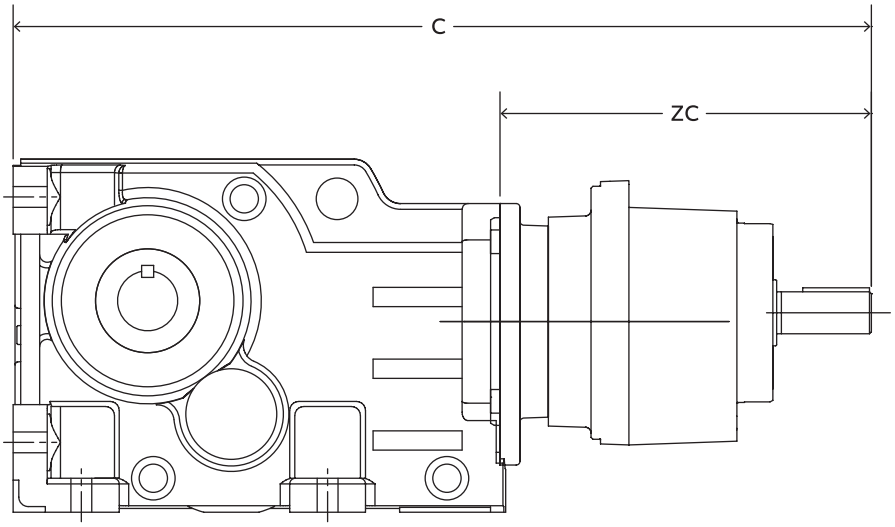

0.02 in

Reducer Size	Reducer Stage	71		80		90		100		112		132		160		180		225		250	
		C	ZC	C	ZC	C	ZC	C	ZC	C	ZC	C	ZC	C	ZC	C	ZC	C	ZC	C	ZC
38	3	14.89	5.95	16.27	7.33	16.66	7.72	17.29	8.35	–	–	–	–	–	–	–	–	–	–	–	–
48	3	16.06	5.94	17.45	7.33	17.84	7.72	18.47	8.35	–	–	–	–	–	–	–	–	–	–	–	–
58	3	16.99	5.69	18.37	7.07	18.77	7.47	19.09	7.79	19.43	8.13	–	–	–	–	–	–	–	–	–	–
68	3	17.96	5.75	19.34	7.13	19.73	7.52	20.36	8.15	20.40	8.19	–	–	–	–	–	–	–	–	–	–
88	3	20.24	5.52	21.61	6.89	22.01	7.29	22.64	7.92	22.60	7.88	25.91	11.19	–	–	–	–	–	–	–	–
108	3	–	–	24.41	6.30	24.80	6.69	25.31	7.20	25.24	7.13	28.58	10.47	30.28	12.17	–	–	–	–	–	–
128	3	–	–	–	–	27.13	6.22	27.64	6.73	27.59	6.68	30.87	9.96	32.62	11.71	33.43	12.52	–	–	–	–
148	3	–	–	–	–	–	–	30.85	6.36	30.75	6.26	34.04	9.55	35.55	11.06	36.48	11.99	37.56	13.07	–	–
168	3	–	–	–	–	–	–	–	–	–	–	37.70	9.23	39.24	10.77	40.16	11.69	41.25	12.78	42.41	13.94

Metric separate input dimensions (dimensions in mm)

Reducer size	Reducer stage	71		80		90		100		112		132		160		180		225		250	
		C	ZC	C	ZC	C	ZC	C	ZC	C	ZC	C	ZC	C	ZC	C	ZC	C	ZC	C	ZC
38	3	378	151	413	186	423	196	439	212	–	–	–	–	–	–	–	–	–	–	–	–
48	3	408	151	443	186	453	196	469	212	–	–	–	–	–	–	–	–	–	–	–	–
58	3	432	145	467	180	477	190	485	198	494	207	–	–	–	–	–	–	–	–	–	–
68	3	456	146	491	181	501	191	517	207	518	208	–	–	–	–	–	–	–	–	–	–
88	3	514	140	549	175	559	185	575	201	574	200	658	284	–	–	–	–	–	–	–	–
108	3	–	–	620	160	630	170	643	183	641	181	726	266	769	309	–	–	–	–	–	–
128	3	–	–	–	–	689	158	702	171	701	170	784	253	829	298	849	318	–	–	–	–
148	3	–	–	–	–	–	–	784	162	781	159	865	243	903	281	927	305	984	362	–	–
168	3	–	–	–	–	–	–	–	–	–	–	958	235	997	274	1020	297	1078	355	1077	354

Output shaft dimensions

Separate – foot mounted – straight hollow bore
Four- and five-stage reduction

BB_4SI_
BB_4SM_
BB_5SI_
BB_5SM_

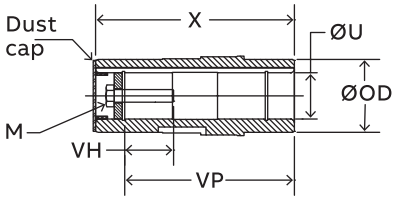

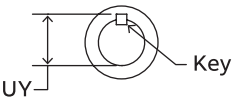

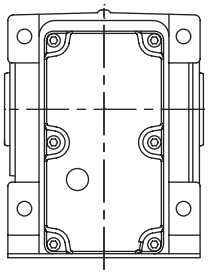

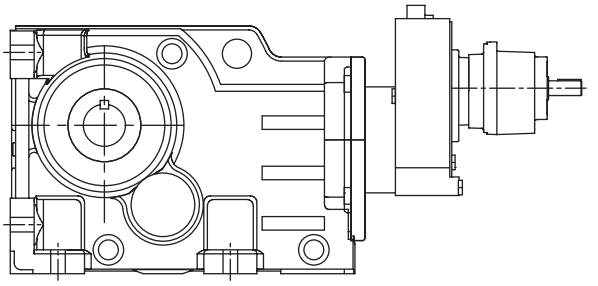

4 Stage reduction

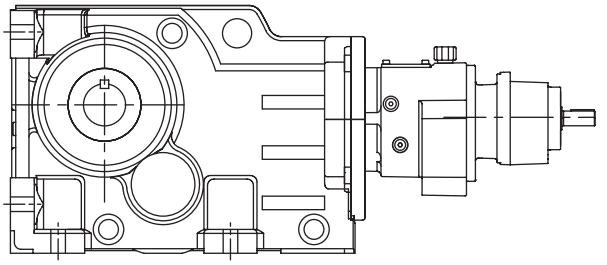

5 Stage reduction

	Standard inch hollow output						Standard metric hollow output					
	Ø U	Tol.	UY	VH	Key	M-Tap	Ø U	Tol.	UY	VH	Key	M-Tap
48	1.375	+0.0010 +0.0004	1.53	1.45	5/16 x 5/16 x 2-3/16	3/8-16 X 1-3/4 UNC	35	+0.025 +0.009	38	43	10 x 8 x 45	M10 x 50
68	1.500	+0.0010 +0.0004	1.68	2.05	3/8 x 3/8 x 3-1/8	5/8-11 X 2-1/4 UNC	40	+0.025 +0.009	43	48	12 x 8 x 50	M16 x 60
88	2.000	+0.0012 +0.0004	2.23	1.89	1/2 x 1/2 x 3-15/16	3/4-10 X 2-1/4 UNC	50	+0.029 +0.010	54	48	14 x 9 x 80	M16 x 36
108	2.375	+0.0012 +0.0004	2.66	2.53	5/8 x 5/8 x 4-1/16	3/4-10 X 3 UNC	60	+0.029 +0.010	64	68	18 x 11 x 100	M20 x 80
128	2.750	+0.0012 +0.0004	3.04	2.51	5/8 x 5/8 x 6-1/8	3/4-10 X 3 UNC	70	+0.029 +0.010	75	68	20 x 12 x 110	M20 x 80
148	3.625	+0.0012 +0.0004	3.84	2.31	7/8 x 7/8 x 7-1/16	1-8 X 2-1/2 UNC	80	+0.034 +0.012	85	68	22 x 14 x 125	M20 x 85
168	4.000	+0.0014 +0.0005	4.45	2.29	1 x 1 x 5-7/8	1-8 X 2-1/2 UNC	100	+0.034 +0.012	106	77	28 x 16 x 160	M24 x 95

See page RHB-205 for optional hollow bore sizes

Gearcase dimensions

Separate – foot mounted – straight hollow bore
Four- and five-stage reduction

BB_4SI_
BB_4SM_
BB_5SI_
BB_5SM_

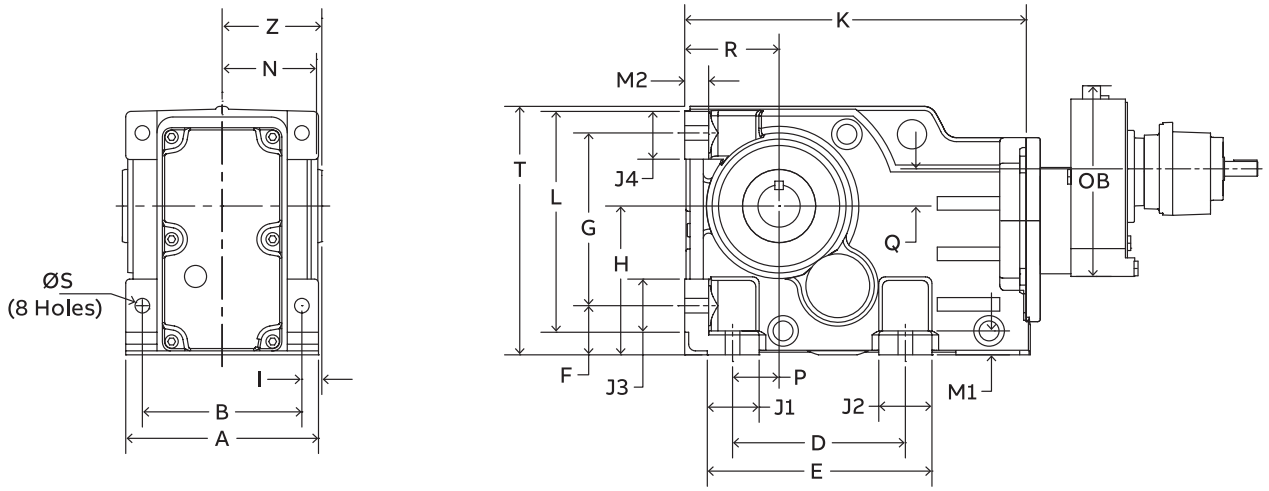

4 Stage reduction

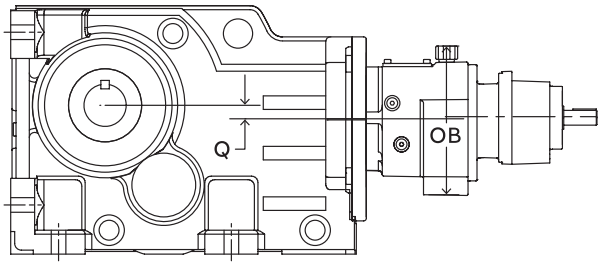

5 Stage reduction

	Mounting dimensions								
	A	B	D	E	F	G	H	I	Ø S
48	5.71	4.72	5.12	6.65	1.45	5.12	4.41	0.59	0.43
68	6.69	5.51	4.72	6.69	1.77	6.30	5.51	0.79	0.53
88	7.87	6.50	5.91	8.07	2.17	7.87	7.09	0.89	0.71
108	9.06	7.09	7.09	10.04	2.76	9.17	8.35	1.18	0.87
128	11.42	9.45	9.45	12.60	2.95	11.61	10.43	1.18	1.02
148	13.39	10.63	11.02	15.20	3.74	14.17	12.40	1.58	1.30
168	15.75	12.99	13.78	18.11	4.33	16.54	14.76	1.58	1.54

	Outline dimensions												4 stage		5 stage	
	J1	J2	J3	J4	M1	M2	K	P	L	N	R	T	Q	OB	Q	OB
48	1.54	1.58	1.58	1.42	0.71	0.71	10.12	1.38	6.54	2.80	2.80	7.36	1.50	7.83	0.43	6.26
68	1.97	1.97	1.97	1.89	0.87	0.87	12.21	1.18	8.19	3.39	3.54	9.09	1.67	7.83	0.26	6.29
88	2.17	2.17	2.17	2.56	0.98	0.98	14.72	1.58	10.31	3.94	4.41	11.61	1.14	7.83	0.79	6.29
108	2.76	3.15	2.76	2.91	1.18	1.18	18.11	2.17	12.09	4.53	5.20	13.58	2.03	9.84	0.51	8.86
128	3.15	3.15	3.15	3.54	1.38	1.38	20.91	2.95	15.09	5.71	6.30	16.65	1.77	9.84	0.79	8.86
148	3.54	4.17	3.54	3.50	1.58	1.58	24.49	3.74	17.67	6.65	7.87	19.80	1.61	11.57	1.46	8.86
168	4.33	4.33	4.33	4.33	1.77	1.77	28.47	4.53	20.87	7.84	8.86	23.62	1.10	11.57	1.97	10.68

Separate input shaft dimensions

Separate – foot mounted – straight hollow bore

Four- and five-stage reduction

BB_4SI_
BB_4SM_
BB_5SI_
BB_5SM_

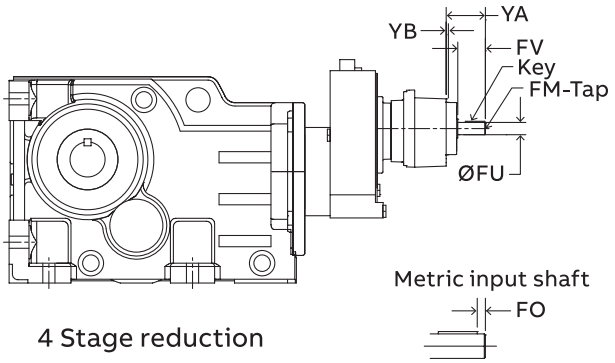

4 Stage reduction

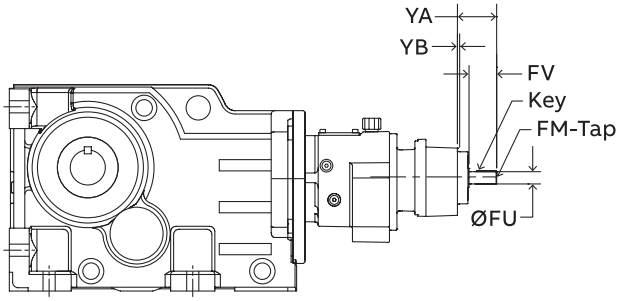

5 Stage reduction

	Separate input mounting dimensions							
	Ø FU	Tol	FO	FV	YA	YB	FM x Depth	Key
71	0.625	+0.0000 -0.0005	–	1.57	2.40	0.16	8-32 UNC x 0.49	3/16 x 3/16 x 1-5/16
	16	+0.012 +0.001	4	40			M5 x 12.5	5 x 5 x 32
80	0.750	+0.0000 -0.0005	–	1.57	2.40	0.16	1/4-20 UNC x 0.63	3/16 x 3/16 x1-5/16
	19	+0.015 +0.002	4	10			M6 x 16	6 x 6 x 32
90	0.875	+0.0000 -0.0005	–	1.97	2.80	0.16	5/16-18 UNC x 0.75	3/16 x 3/16 x 1-5/8
	24	+0.015 +0.002	5	50			M8 x 19	8 x 7 x 40
100	1.125	+0.0000 -0.0005	–	2.36	3.27	0.16	3/8-16 UNC x 0.87	1/4 x 1/4 x 2
	28	+0.015 +0.002	5	60			M10 x 22	8 x 7 x 50
112	1.250	+0.0000 -0.0005	–	2.36	3.27	0.16	3/8-16 UNC x 0.87	1/4 x 1/4 x 2
	28	+0.015 +0.002	5	60			M10 x 22	8 x 7 x 50
132	1.375	+0.0000 -0.0005	–	3.15	6.61	0.14	3/8-16 UNC x 1.10	5/16 x 5/16 x 2-3/4
	38	+0.018 +0.002	5	80			M12 x 28	10 x 8 x 70

Separate input shaft dimensions

Separate – foot mounted – straight hollow bore

Four- and five-stage reduction

BB_4SI_
BB_4SM_
BB_5SI_
BB_5SM_

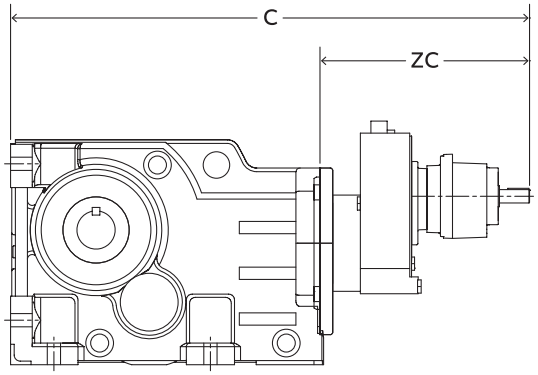

4 Stage reduction

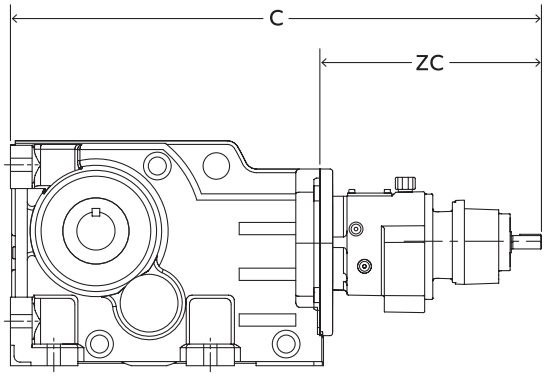

5 Stage reduction

Inch separate input dimensions

Reducer size	Reducer stage	71		80		90		100		112		132	
		C	ZC	C	ZC	C	ZC	C	ZC	C	ZC	C	ZC
48	4	21.07	10.95	22.37	12.25	22.77	12.65	23.47	13.35	–	–	–	–
	5	22.20	12.08	23.57	13.45	23.97	13.85	24.60	14.48	–	–	–	–
68	4	22.77	10.56	24.07	11.86	24.47	12.26	25.17	12.96	–	–	–	–
	5	23.90	11.69	25.27	13.06	25.67	13.46	26.30	14.09	–	–	–	–
88	4	25.22	10.50	26.52	11.80	26.92	12.20	27.62	12.90	–	–	–	–
	5	26.35	11.63	27.72	13.00	28.12	13.40	28.75	14.03	–	–	–	–
108	4	28.43	10.32	29.73	11.62	30.13	12.02	30.83	12.72	30.83	12.72	–	–
	5	30.77	12.66	32.15	14.04	32.54	14.43	33.17	15.06	33.21	15.10	–	–
128	4	31.55	10.64	32.85	11.94	33.25	12.34	33.95	13.04	33.95	13.04	–	–
	5	33.42	12.51	34.80	13.89	35.19	14.28	35.82	14.91	35.86	14.95	–	–
148	4	35.55	11.06	36.95	12.46	37.35	12.86	37.95	13.46	37.95	13.46	41.25	16.76
	5	36.79	12.30	38.17	13.68	38.56	14.07	39.19	14.70	39.23	14.74	–	–
168	4	39.38	10.91	40.78	12.31	41.18	12.71	41.78	13.31	41.78	13.31	45.08	16.61
	5	42.60	14.13	43.98	15.51	44.37	15.90	45.00	16.53	44.96	16.49	48.27	19.80

Metric separate input dimensions (dimensions in mm)

Reducer size	Reducer stage	71		80		90		100		112		132	
		C	ZC	C	ZC	C	ZC	C	ZC	C	ZC	C	ZC
48	4	535	278	568	311	578	321	596	339	–	–	–	–
	5	564	307	599	342	609	352	625	368	–	–	–	–
68	4	578	268	611	301	621	311	639	329	–	–	–	–
	5	607	297	642	332	652	342	668	358	–	–	–	–
88	4	641	267	674	300	684	310	702	328	–	–	–	–
	5	669	295	704	330	714	340	730	356	–	–	–	–
108	4	722	262	755	295	765	305	783	323	783	323	–	–
	5	782	322	817	357	827	367	843	383	844	384	–	–
128	4	801	270	834	303	845	313	862	331	862	331	–	–
	5	849	318	884	353	894	363	910	379	911	380	–	–
148	4	903	281	939	317	949	327	964	342	964	342	1048	426
	5	934	312	970	347	979	357	995	373	996	374	–	–
168	4	1000	277	1036	313	1046	323	1061	338	1061	338	1145	422
	5	1082	359	1117	394	1127	404	1143	420	1142	419	1226	503

Output shaft dimensions

Separate – flange mounted – straight hollow bore

Triple reduction

BF_3SI_
BF_3SM_

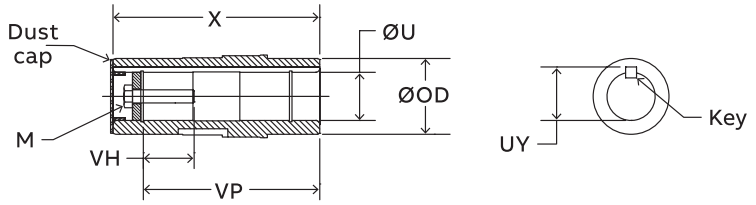

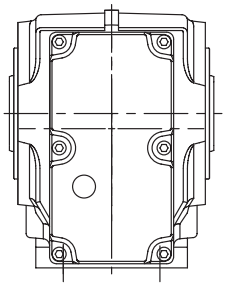

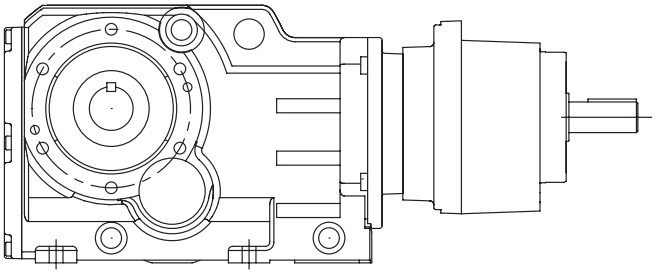

B14 Output flange

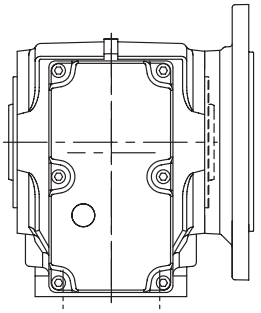

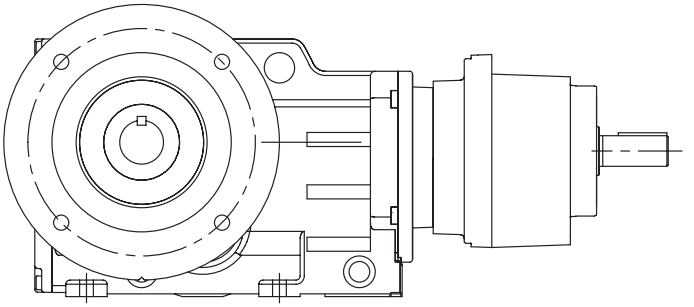

B5 Output flange

	Standard inch hollow output						Standard metric hollow output					
	Ø U	Tol.	UY	VH	Key	M-Tap	Ø U	Tol.	UY	VH	Key	M-Tap
38	1.250	+0.0010 +0.0004	1.38	1.47	1/4 x 1/4 x 1-7/8	3/8-16 X 1-3/4 UNC	30	+0.020 +0.007	33	31	8 x 7 x 40	M10 x 40
48	1.375	+0.0010 +0.0004	1.53	1.45	5/16 x 5/16 x 2-3/16	3/8-16 X 1-3/4 UNC	35	+0.025 +0.009	38	43	10 x 8 x 45	M10 x 50
58	1.500	+0.0010 +0.0004	1.68	2.05	3/8 x 3/8 x 3-1/8	5/8-11 X 2-1/4 UNC	40	+0.025 +0.009	43	48	12 x 8 x 50	M16 x 60
68	1.500	+0.0010 +0.0004	1.68	2.05	3/8 x 3/8 x 3-1/8	5/8-11 X 2-1/4 UNC	40	+0.025 +0.009	43	48	12 x 8 x 50	M16 x 60
88	2.000	+0.0012 +0.0004	2.23	1.89	1/2 x 1/2 x 3-15/16	3/4-10 X 2-1/4 UNC	50	+0.029 +0.010	54	48	14 x 9 x 80	M16 x 36
108	2.375	+0.0012 +0.0004	2.66	2.53	5/8 x 5/8 x 4-1/16	3/4-10 X 3 UNC	60	+0.029 +0.010	64	68	18 x 11 x 100	M20 x 80
128	2.750	+0.0012 +0.0004	3.04	2.51	5/8 x 5/8 x 6-1/8	3/4-10 X 3 UNC	70	+0.029 +0.010	75	68	20 x 12 x 110	M20 x 80
148	3.625	+0.0012 +0.0004	3.84	2.31	7/8 x 7/8 x 7-1/16	1-8 X 2-1/2 UNC	80	+0.034 +0.012	85	68	22 x 14 x 125	M20 x 85
168	4.000	+0.0014 +0.0005	4.45	2.29	1 x 1 x 5-7/8	1-8 X 2-1/2 UNC	100	+0.034 +0.012	106	77	28 x 16 x 160	M24 x 95

See page RHB-205 for optional hollow bore sizes

Gearcase dimensions

BF_3SI_
BF_3SM_

Separate – flange mounted – straight hollow bore
Triple reduction

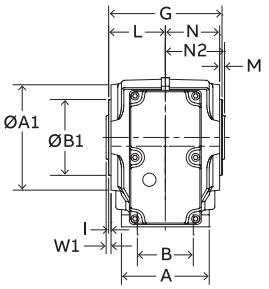

B14 Output flange

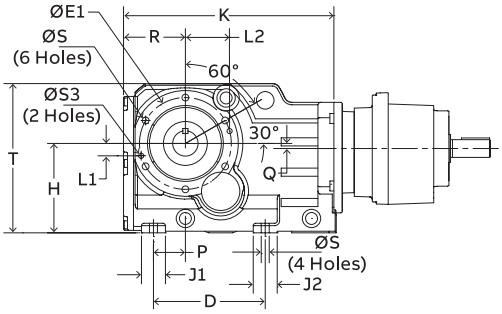

B14 Output flange
Sizes 38-128

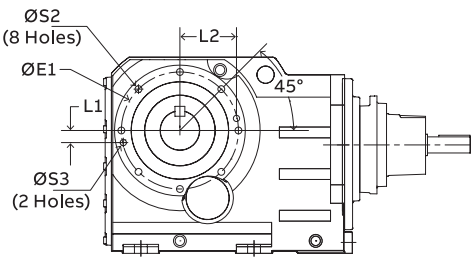

B14 Output flange
Sizes 148-168

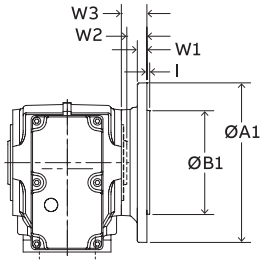

B5 Output flange

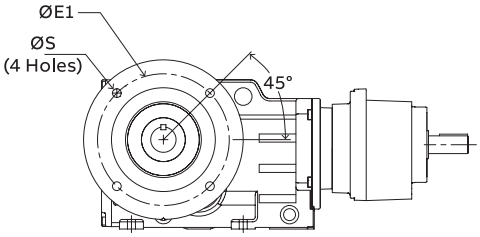

B5 Output flange
Sizes 38-108

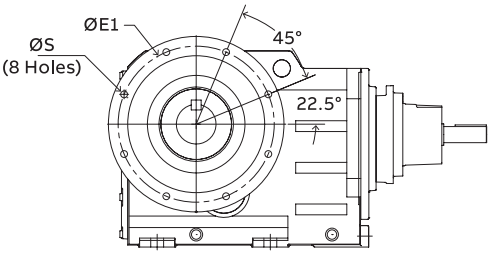

B5 Output flange
Sizes 128-168

	Mounting dimensions							Outline dimensions										
	B	D	H	X	VP	Ø OD	Ø S	A	K	G	L	N	P	Q	R	T	J1	J2
38	2.36	4.61	3.94	4.72	4.02	1.77	M10 X 0.67	3.94	9.21	4.49	2.36	2.24	1.38	0.37	2.76	6.58	1.26	1.26
48	2.76	5.51	4.41	5.91	5.04	2.17	M10 X 0.66	4.33	10.37	5.59	2.80	2.68	1.58	0.43	3.05	7.36	1.18	1.18
58	3.46	5.98	5.20	6.54	5.59	2.17	M12 X 0.93	5.20	11.48	6.30	3.15	2.99	1.85	0.39	3.33	8.63	2.06	2.08
68	3.46	5.98	5.51	7.09	5.91	2.56	M12 X 0.93	5.51	12.15	6.77	3.39	3.25	1.65	0.26	3.48	9.09	1.97	1.97
88	4.53	6.69	7.09	8.27	7.09	3.15	M16 X 1.10	6.69	14.64	7.87	3.80	3.94	1.89	0.79	4.33	11.61	2.17	2.17
108	6.57	8.86	8.35	9.45	8.19	3.74	M16 X 1.10	8.27	18.24	9.06	4.53	4.37	2.56	0.51	5.33	13.58	2.76	2.76
128	8.39	9.76	10.43	11.81	10.35	4.33	M20 X 1.33	10.04	20.77	11.42	5.71	5.55	3.27	0.79	6.16	16.65	3.15	3.15
148	8.27	11.42	12.40	13.78	12.20	4.72	M24 X 1.61	11.26	24.31	13.31	6.65	6.46	3.94	1.46	7.71	19.80	3.54	3.54
168	9.45	13.78	14.76	16.14	14.41	5.91	M30 x 1.57	12.76	28.29	15.67	7.84	7.64	4.53	1.97	8.68	23.62	4.33	4.33

	B14 mounting dimensions									B5 mounting dimensions							
	Ø A1	Ø B1	Ø E1	Ø S2	I	W1	Ø S3	L1	L2	Ø A1	Ø B1	Ø E1	Ø S2	I	W1	W2	W3
38	4.72	3.1497	3.94	M8 X 0.55	0.12	0.24	–	–	–	6.30	4.3308	5.12	0.35	0.14	0.39	0.95	1.18
48	5.20	3.7402	4.53	M10 X 0.66	0.12	0.29	–	–	–	7.87	5.1182	6.50	0.43	0.14	0.47	0.97	1.26
58	5.91	4.3308	5.12	M12 X 0.82	0.16	0.28	–	–	–	9.84	7.0867	8.47	0.53	0.16	0.59	0.90	1.20
68	5.91	4.3308	5.12	M12 X 0.82	0.14	0.30	–	–	–	9.84	7.0867	8.47	0.53	0.16	0.30	0.59	1.20
88	7.48	5.1182	6.50	M12 X 0.82	0.14	0.34	–	–	–	11.81	9.0552	10.43	0.53	0.16	0.63	1.46	1.79
108	9.65	7.0867	8.47	M16 X 1.10	0.16	0.35	0.47	1.10	4.06	13.78	9.8419	11.81	0.69	0.20	0.71	1.42	1.77
128	11.61	9.0552	10.43	M16 X 1.10	0.16	0.35	0.47	1.69	4.92	17.71	13.7788	15.75	0.69	0.20	0.87	1.63	1.99
148	13.19	9.8419	11.81	M20 X 1.33	0.20	0.43	0.63	1.22	5.71	17.71	13.7788	15.75	0.69	0.20	0.87	1.61	2.05
168	15.75	11.8104	13.78	M20 X 1.33	0.20	0.43	0.63	1.46	3.73	21.65	17.7157	19.69	0.69	0.20	0.98	2.01	2.44

Separate input shaft dimensions

Separate – flange mounted – straight hollow bore

Triple reduction

BF_3SI_
BF_3SM_

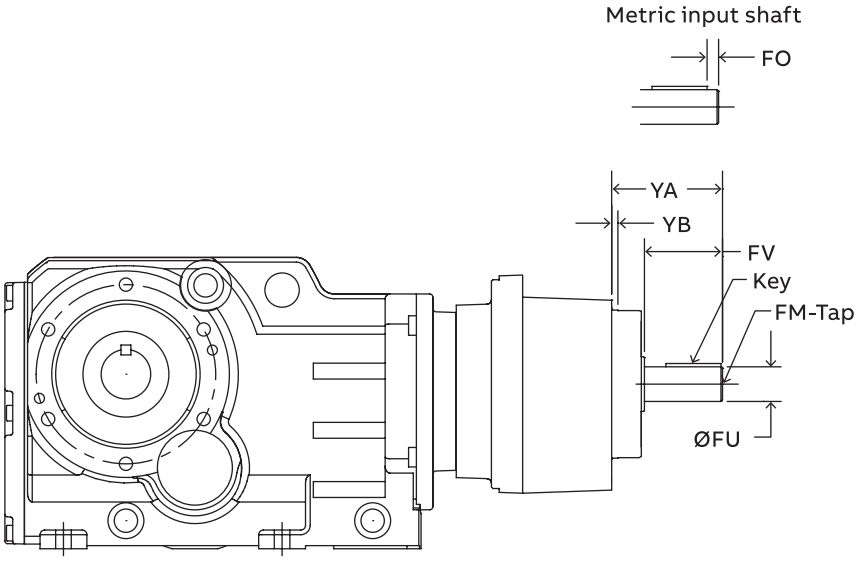

	Separate input mounting dimensions							
	Ø FU	Tol	FO	FV	YA	YB	FM x Depth	Key
71	0.625	+0.0000 -0.0005	–	1.57	2.40	0.16	8-32 UNC x 0.49	3/16 x 3/16 x 1-5/16
	16	+0.012 +0.001	4	40			M5 x 12.5	5 x 5 x 32
80	0.750	+0.0000 -0.0005	–	1.57	2.40	0.16	1/4-20 UNC x 0.63	3/16 x 3/16 x1-5/16
	19	+0.015 +0.002	4	10			M6 x 16	6 x 6 x 32
90	0.875	+0.0000 -0.0005	–	1.97	2.80	0.16	5/16-18 UNC x 0.75	3/16 x 3/16 x 1-5/8
	24	+0.015 +0.002	5	50			M8 x 19	8 x 7 x 40
100	1.125	+0.0000 -0.0005	–	2.36	3.27	0.16	3/8-16 UNC x 0.87	1/4 x 1/4 x 2
	28	+0.015 +0.002	5	60			M10 x 22	8 x 7 x 50
112	1.250	+0.0000 -0.0005	–	2.36	3.27	0.16	3/8-16 UNC x 0.87	1/4 x 1/4 x 2
	28	+0.015 +0.002	5	60			M10 x 22	8 x 7 x 50
132	1.375	+0.0000 -0.0005	–	3.15	6.61	0.14	3/8-16 UNC x 1.10	5/16 x 5/16 x 2-3/4
	38	+0.018 +0.002	5	80			M12 x 28	10 x 8 x 70
160	1.625	+0.0000 -0.0010	–	4.33	8.46	0.14	5/8-11 UNC x 1.42	3/8 x 3/8 x 3-1/2
	42	+0.018 +0.002	10	110			M16 x 36	12 x 8 x 90
180	2.125	+0.0000 -0.0010	–	4.33	9.25	0.20	3/4-10 UNC x 1.65	1/2 x 1/2 x 3-5/8
	55	+0.030 +0.011	10	110			M20 x 42	16 x 10 x 90
225	2.125	+0.0000 -0.0010	–	4.33	9.05	0.20	3/4-10 UNC x 1.65	1/2 x 1/2 x 3-5/8
	60	+0.030 +0.011	15	140			M20 x 42	18 x 11 x 110
250	2.375	+0.0000 -0.0010	–	5.51	10.20	0.20	3/4-10 UNC x 1.65	5/8 x 5/8 x 4-3/8
	65	+0.030 +0.011	15	140			M20 x 42	18 x 11 x 110

Separate input shaft dimensions

BF_3SI_
BF_3SM_

Separate – flange mounted – straight hollow bore

Triple reduction

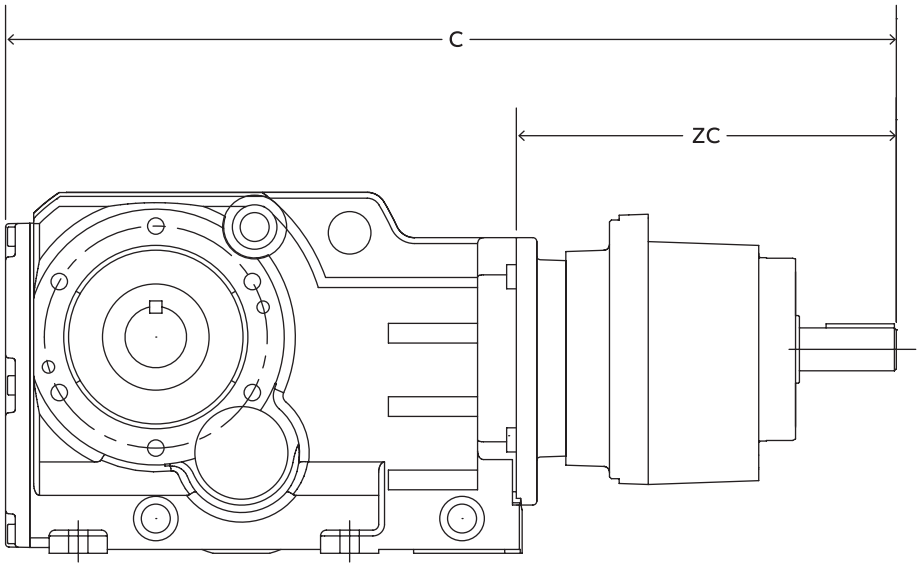

Inch separate input dimensions

Reducer size	Reducer stage	71		80		90		100		112		132		160		180		225		250	
		C	ZC	C	ZC	C	ZC	C	ZC	C	ZC	C	ZC	C	ZC	C	ZC	C	ZC	C	ZC
38	3	15.16	5.95	16.54	7.33	16.93	7.72	17.56	8.35	–	–	–	–	–	–	–	–	–	–	–	–
48	3	16.31	5.94	17.70	7.33	18.09	7.72	18.72	8.35	–	–	–	–	–	–	–	–	–	–	–	–
58	3	17.17	5.69	18.55	7.07	18.95	7.47	19.27	7.79	19.61	8.13	–	–	–	–	–	–	–	–	–	–
68	3	17.90	5.75	19.28	7.13	19.67	7.52	20.30	8.15	20.34	8.19	–	–	–	–	–	–	–	–	–	–
88	3	20.16	5.52	21.53	6.89	21.93	7.29	22.56	7.92	22.52	7.88	25.83	11.19	–	–	–	–	–	–	–	–
108	3	–	–	24.54	6.30	24.93	6.69	25.44	7.20	25.37	7.13	28.71	10.47	30.41	12.17	–	–	–	–	–	–
128	3	–	–	–	–	26.99	6.22	27.50	6.73	27.45	6.68	30.73	9.96	32.48	11.71	33.29	12.52	–	–	–	–
148	3	–	–	–	–	–	–	30.67	6.36	30.57	6.26	33.86	9.55	35.37	11.06	36.30	11.99	37.38	13.07	–	–
168	3	–	–	–	–	–	–	–	–	–	–	37.52	9.23	39.06	10.77	39.98	11.69	41.07	12.78	42.23	13.94

Metric separate input dimensions (dimensions in mm)

Reducer size	Reducer stage	71		80		90		100		112		132		160		180		225		250	
		C	ZC	C	ZC	C	ZC	C	ZC	C	ZC	C	ZC	C	ZC	C	ZC	C	ZC	C	ZC
38	3	385	151	420	186	430	196	446	212	–	–	–	–	–	–	–	–	–	–	–	–
48	3	415	151	450	186	460	196	476	212	–	–	–	–	–	–	–	–	–	–	–	–
58	3	436	145	471	180	481	190	489	198	498	207	–	–	–	–	–	–	–	–	–	–
68	3	454	146	489	181	499	191	515	207	516	208	–	–	–	–	–	–	–	–	–	–
88	3	512	140	547	175	557	185	573	201	572	200	656	284	–	–	–	–	–	–	–	–
108	3	–	–	623	160	633	170	647	183	645	181	729	266	773	309	–	–	–	–	–	–
128	3	–	–	–	–	686	158	699	171	697	170	781	253	825	298	846	318	–	–	–	–
148	3	–	–	–	–	–	–	780	162	777	159	861	243	899	281	923	305	980	362	–	–
168	3	–	–	–	–	–	–	–	–	–	–	953	235	992	274	1016	297	1073	355	1073	354

Output shaft dimensions

Separate – flange mounted – straight hollow bore
Four- and five-stage reduction

BF_4SI_
BF_4SM_
BF_5SI_
BF_5SM_

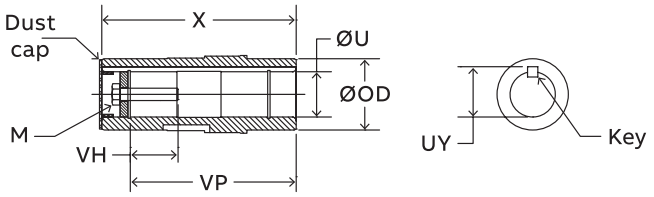

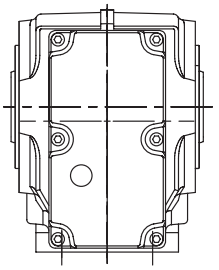

B14 Output flange

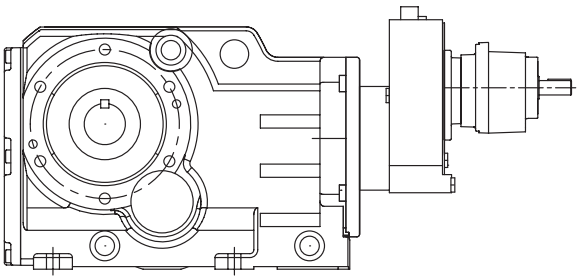

4 Stage reduction

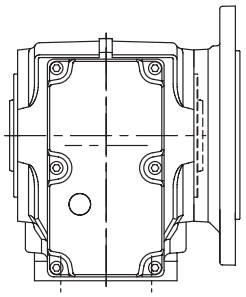

B5 Output flange

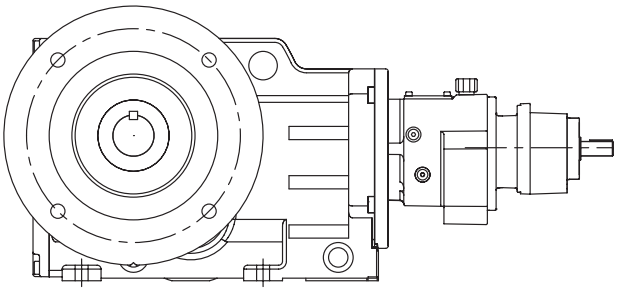

5 Stage reduction

	Standard inch hollow output						Standard metric hollow output					
	Ø U	Tol.	UY	VH	Key	M-Tap	Ø U	Tol.	UY	VH	Key	M-Tap
48	1.375	+0.0010 +0.0004	1.53	1.45	5/16 x 5/16 x 2-3/16	3/8-16 X 1-3/4 UNC	35	+0.025 +0.009	38	43	10 x 8 x 45	M10 x 50
68	1.500	+0.0010 +0.0004	1.68	2.05	3/8 x 3/8 x 3-1/8	5/8-11 X 2-1/4 UNC	40	+0.025 +0.009	43	48	12 x 8 x 50	M16 x 60
88	2.000	+0.0012 +0.0004	2.23	1.89	1/2 x 1/2 x 3-15/16	3/4-10 X 2-1/4 UNC	50	+0.029 +0.010	54	48	14 x 9 x 80	M16 x 36
108	2.375	+0.0012 +0.0004	2.66	2.53	5/8 x 5/8 x 4-1/16	3/4-10 X 3 UNC	60	+0.029 +0.010	64	68	18 x 11 x 100	M20 x 80
128	2.750	+0.0012 +0.0004	3.04	2.51	5/8 x 5/8 x 6-1/8	3/4-10 X 3 UNC	70	+0.029 +0.010	75	68	20 x 12 x 110	M20 x 80
148	3.625	+0.0012 +0.0004	3.84	2.31	7/8 x 7/8 x 7-1/16	1-8 X 2-1/2 UNC	80	+0.034 +0.012	85	68	22 x 14 x 125	M20 x 85
168	4.000	+0.0014 +0.0005	4.45	2.29	1 x 1 x 5-7/8	1-8 X 2-1/2 UNC	100	+0.034 +0.012	106	77	28 x 16 x 160	M24 x 95

See page RHB-205 for optional hollow bore sizes

Gearcase dimensions

Separate – flange mounted – straight hollow bore

Four- and five-stage reduction

BF_4SI_
BF_4SM_
BF_5SI_
BF_5SM_

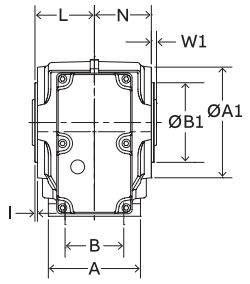

B14 Output flange
Sizes 38-168

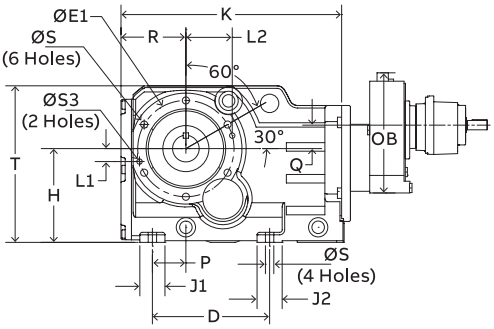

B14 Output flange
Sizes 38-128

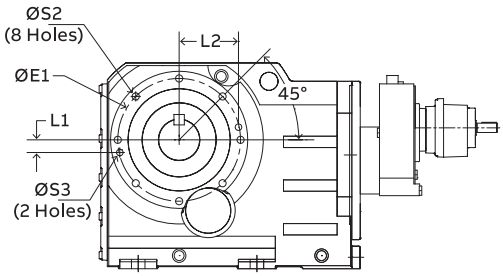

B14 Output flange
Sizes 148-168

4 Stage reduction

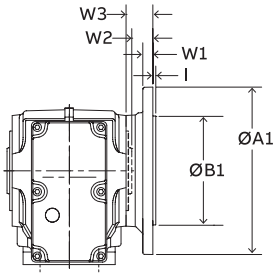

B5 Output flange
Sizes 38-168

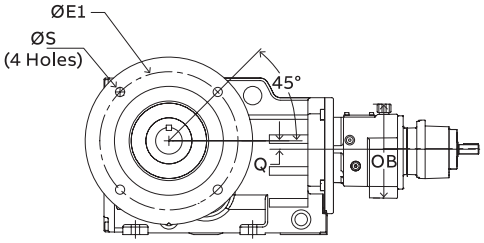

B5 Output flange
Sizes 38-108

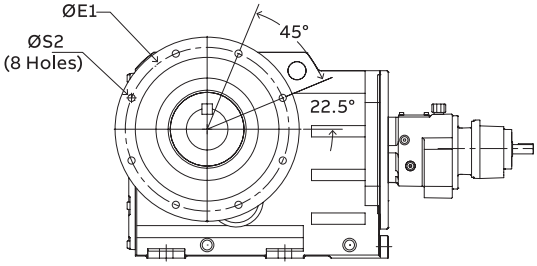

B5 Output flange
Sizes 128-168

5 Stage reduction

	Mounting dimensions				Outline dimensions									4 stage		5 stage	
	B	D	H	Ø S	A	K	L	N	P	R	T	J1	J2	Q	OB	Q	OB
48	2.76	5.51	4.41	M10 X 0.66	4.33	10.37	2.80	2.68	1.58	3.05	7.36	1.18	1.18	1.50	7.83	0.43	6.26
68	3.46	5.98	5.51	M12 X 0.93	5.51	12.15	3.39	3.25	1.65	3.48	9.09	1.97	1.97	1.67	7.83	0.26	6.29
88	4.53	6.69	7.09	M16 X 1.10	6.69	14.64	3.80	3.94	1.89	4.33	11.61	2.17	2.17	1.14	7.83	0.79	6.29
108	6.57	8.86	8.35	M16 X 1.10	8.27	18.24	4.53	4.37	2.56	5.33	13.58	2.76	2.76	2.03	9.84	0.51	8.86
128	8.39	9.76	10.43	M20 X 1.33	10.04	20.77	5.71	5.55	3.27	6.16	16.65	3.15	3.15	1.77	9.84	0.79	8.86
148	8.27	11.42	12.40	M24 X 1.61	11.26	24.31	6.65	6.46	3.94	7.71	19.80	3.54	3.54	1.61	11.57	1.46	8.86
168	9.45	13.78	14.76	M30 x 1.57	12.76	28.29	7.84	7.64	4.53	8.68	23.62	4.33	4.33	1.10	11.57	1.97	10.68

	B14 mounting dimensions									B5 mounting dimensions							
	Ø A1	Ø B1	Ø E1	Ø S2	I	W1	Ø S3	L1	L2	Ø A1	Ø B1	Ø E1	Ø S2	I	W1	W2	W3
48	5.20	3.7402	4.53	M10 X 0.66	0.12	0.29	–	–	–	7.87	5.1182	6.50	0.43	0.14	0.47	0.97	1.26
68	5.91	4.3308	5.12	M12 X 0.82	0.14	0.30	–	–	–	9.84	7.0867	8.47	0.53	0.16	0.59	0.90	1.20
88	7.48	5.1182	6.50	M12 X 0.82	0.14	0.34	–	–	–	11.81	9.0552	10.43	0.53	0.16	0.63	1.46	1.79
108	9.65	7.0867	8.47	M16 X 1.10	0.16	0.35	0.47	1.10	4.06	13.78	9.8419	11.81	0.69	0.20	0.71	1.42	1.77
128	11.61	9.0552	10.43	M16 X 1.10	0.16	0.35	0.47	1.69	4.92	17.71	13.7788	15.75	0.69	0.20	0.87	1.63	1.99
148	13.19	9.8419	11.81	M20 X 1.33	0.20	0.43	0.63	1.22	5.71	17.71	13.7788	15.75	0.69	0.20	0.87	1.61	2.05
168	15.75	11.8104	13.78	M20 X 1.33	0.20	0.43	0.63	1.46	3.73	21.65	17.7157	19.69	0.69	0.20	0.98	2.01	2.44

Separate input shaft dimensions

Separate – flange mounted – straight hollow bore

Four- and five-stage reduction

BF_4SI_
BF_4SM_
BF_5SI_
BF_5SM_

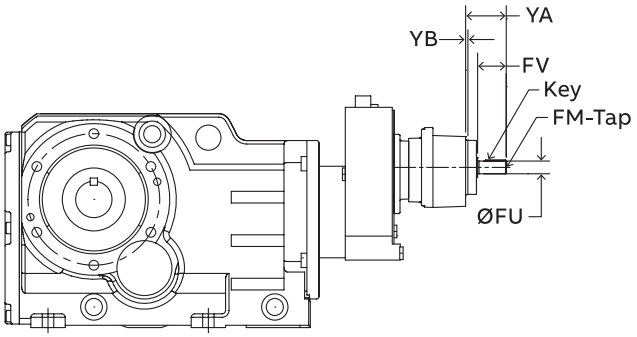

4 Stage reduction

Metric input shaft

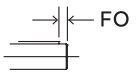

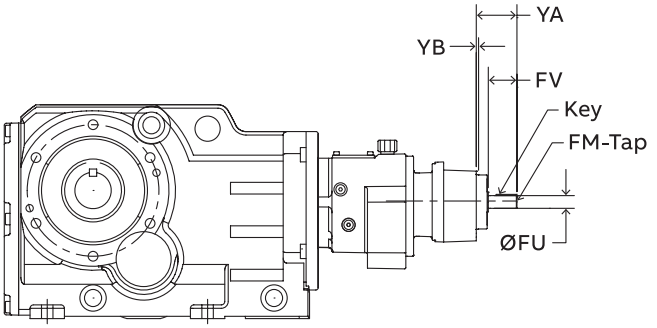

5 Stage reduction

	Separate input mounting dimensions							
	Ø FU	Tol	FO	FV	YA	YB	FM x Depth	Key
71	0.625	+0.0000 -0.0005	–	1.57	2.40	0.16	8-32 UNC x 0.49	3/16 x 3/16 x 1-5/16
	16	+0.012 +0.001	4	40			M5 x 12.5	5 x 5 x 32
80	0.750	+0.0000 -0.0005	–	1.57	2.40	0.16	1/4-20 UNC x 0.63	3/16 x 3/16 x1-5/16
	19	+0.015 +0.002	4	10			M6 x 16	6 x 6 x 32
90	0.875	+0.0000 -0.0005	–	1.97	2.80	0.16	5/16-18 UNC x 0.75	3/16 x 3/16 x 1-5/8
	24	+0.015 +0.002	5	50			M8 x 19	8 x 7 x 40
100	1.125	+0.0000 -0.0005	–	2.36	3.27	0.16	3/8-16 UNC x 0.87	1/4 x 1/4 x 2
	28	+0.015 +0.002	5	60			M10 x 22	8 x 7 x 50
112	1.250	+0.0000 -0.0005	–	2.36	3.27	0.16	3/8-16 UNC x 0.87	1/4 x 1/4 x 2
	28	+0.015 +0.002	5	60			M10 x 22	8 x 7 x 50
132	1.375	+0.0000 -0.0005	–	3.15	6.61	0.14	3/8-16 UNC x 1.10	5/16 x 5/16 x 2-3/4
	38	+0.018 +0.002	5	80			M12 x 28	10 x 8 x 70

Separate input shaft dimensions

Separate – flange mounted – straight hollow bore

Four- and five-stage reduction

BF_4SI_
BF_4SM_
BF_5SI_
BF_5SM_

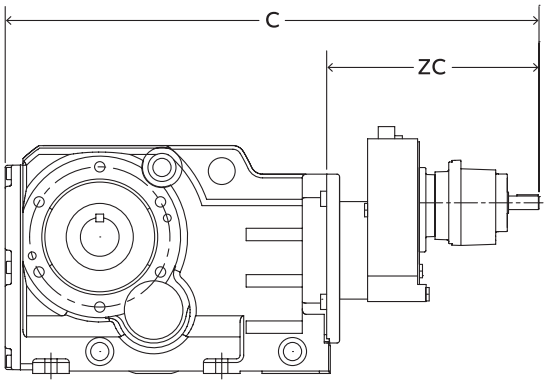

4 Stage reduction

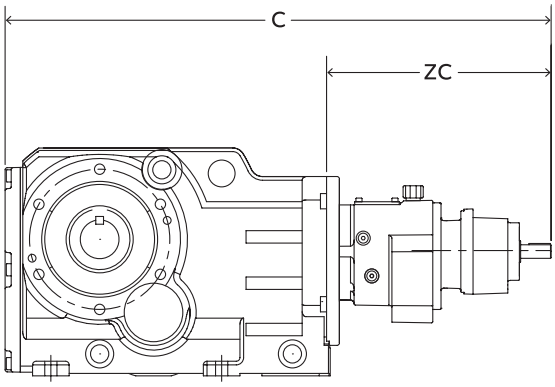

5 Stage reduction

Inch separate input dimensions

Reducer size	Reducer stage	71		80		90		100		112		132	
		C	ZC	C	ZC	C	ZC	C	ZC	C	ZC	C	ZC
48	4	21.32	10.95	22.62	12.25	23.02	12.65	23.72	13.35	–	–	–	–
	5	22.45	12.08	23.82	13.45	24.22	13.85	24.85	14.48	–	–	–	–
68	4	22.71	10.56	24.01	11.86	24.41	12.26	25.11	12.96	–	–	–	–
	5	23.84	11.69	25.21	13.06	25.61	13.46	26.24	14.09	–	–	–	–
88	4	25.14	10.50	26.44	11.80	26.84	12.20	27.54	12.90	–	–	–	–
	5	26.27	11.63	27.64	13.00	28.04	13.40	28.67	14.03	–	–	–	–
108	4	28.56	10.32	29.86	11.62	30.26	12.02	30.96	12.72	30.96	12.72	–	–
	5	30.90	12.66	32.28	14.04	32.67	14.43	33.30	15.06	33.34	15.10	–	–
128	4	31.27	10.64	32.57	11.94	32.97	12.34	33.67	13.04	33.67	13.04	–	–
	5	33.14	12.51	34.52	13.89	34.91	14.28	35.54	14.91	35.58	14.95	–	–
148	4	35.19	11.06	36.59	12.46	36.99	12.86	37.59	13.46	37.59	13.46	41.25	16.76
	5	36.43	12.30	37.81	13.68	38.20	14.07	38.83	14.70	38.87	14.74	–	–
168	4	39.20	10.91	40.60	12.31	41.00	12.71	41.60	13.31	41.60	13.31	44.90	16.61
	5	42.42	14.13	43.80	15.51	44.19	15.90	44.82	16.53	44.78	16.49	48.09	19.80

Metric separate input dimensions (dimensions in mm)

Reducer size	Reducer stage	71		80		90		100		112		132	
		C	ZC	C	ZC	C	ZC	C	ZC	C	ZC	C	ZC
48	4	542	278	575	311	585	321	603	339	–	–	–	–
	5	570	307	605	342	615	352	631	368	–	–	–	–
68	4	577	268	610	301	620	311	638	329	–	–	–	–
	5	606	297	640	332	650	342	666	358	–	–	–	–
88	4	639	267	672	300	682	310	699	328	–	–	–	–
	5	667	295	702	330	712	340	728	356	–	–	–	–
108	4	725	262	758	295	769	305	786	323	786	323	–	–
	5	785	322	820	357	830	367	846	383	847	384	–	–
128	4	794	270	827	303	837	313	855	331	855	331	–	–
	5	842	318	877	353	887	363	903	379	904	380	–	–
148	4	894	281	929	317	940	327	955	342	955	342	1048	426
	5	925	312	960	347	970	357	986	373	987	374	–	–
168	4	996	277	1031	313	1041	323	1057	338	1057	338	1140	422
	5	1077	359	1113	394	1122	404	1138	420	1137	419	1221	503

Output shaft dimensions

Integral – foot mounted – straight hollow bore

Triple reduction

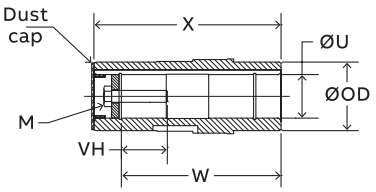

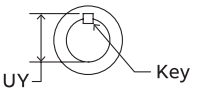

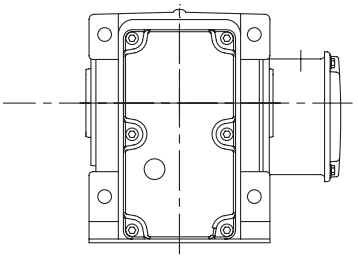

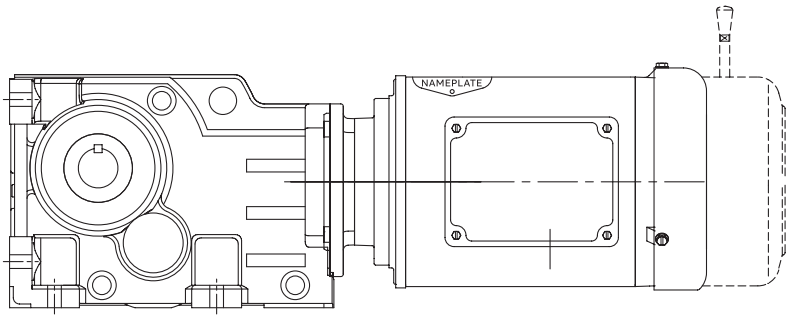

	Standard inch hollow output						Standard metric hollow output					
	Ø U	Tol.	UY	VH	Key	M-Tap	Ø U	Tol.	UY	VH	Key	M-Tap
38	1.250	+0.0010 +0.0004	1.38	1.47	1/4 x 1/4 x 1-7/8	3/8-16 X 1-3/4 UNC	30	+0.020 +0.007	33	31	8 x 7 x 40	M10 x 40
48	1.375	+0.0010 +0.0004	1.53	1.45	5/16 x 5/16 x 2-3/16	3/8-16 X 1-3/4 UNC	35	+0.025 +0.009	38	43	10 x 8 x 45	M10 x 50
58	1.500	+0.0010 +0.0004	1.68	2.05	3/8 x 3/8 x 3-1/8	5/8-11 X 2-1/4 UNC	40	+0.025 +0.009	43	48	12 x 8 x 50	M16 x 60
68	1.500	+0.0010 +0.0004	1.68	2.05	3/8 x 3/8 x 3-1/8	5/8-11 X 2-1/4 UNC	40	+0.025 +0.009	43	48	12 x 8 x 50	M16 x 60
88	2.000	+0.0012 +0.0004	2.23	1.89	1/2 x 1/2 x 3-15/16	3/4-10 X 2-1/4 UNC	50	+0.029 +0.010	54	48	14 x 9 x 80	M16 x 36
108	2.375	+0.0012 +0.0004	2.66	2.53	5/8 x 5/8 x 4-1/16	3/4-10 X 3 UNC	60	+0.029 +0.010	64	68	18 x 11 x 100	M20 x 80
128	2.750	+0.0012 +0.0004	3.04	2.51	5/8 x 5/8 x 6-1/8	3/4-10 X 3 UNC	70	+0.029 +0.010	75	68	20 x 12 x 110	M20 x 80
148	3.625	+0.0012 +0.0004	3.84	2.31	7/8 x 7/8 x 7-1/16	1-8 X 2-1/2 UNC	80	+0.034 +0.012	85	68	22 x 14 x 125	M20 x 85
168	4.000	+0.0014 +0.0005	4.45	2.29	1 x 1 x 5-7/8	1-8 X 2-1/2 UNC	100	+0.034 +0.012	106	77	28 x 16 x 160	M24 x 95

See page RHB-205 for optional hollow bore sizes

Gearcase dimensions

BB_3GH_

Integral – foot mounted – straight hollow bore
Triple reduction

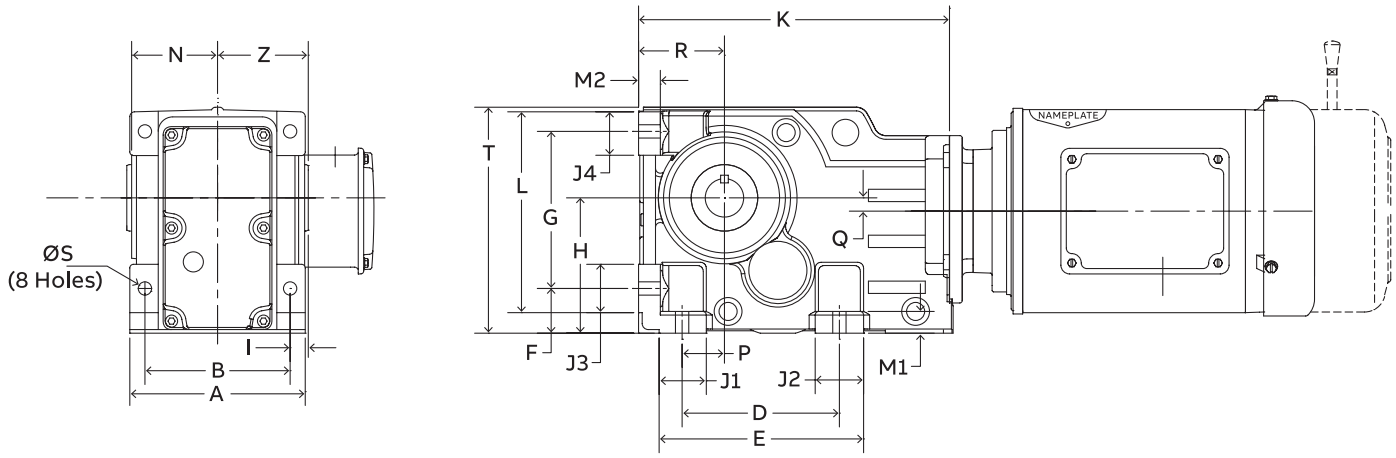

	Mounting dimensions										
	A	B	D	E	F	G	H	I	Ø S	VP	Z
38	4.72	3.94	4.33	5.55	1.26	4.53	3.94	0.39	0.43	4.02	2.36
48	5.71	4.72	5.12	6.65	1.45	5.12	4.41	0.59	0.43	5.04	2.95
58	6.30	5.12	5.12	6.78	1.77	5.91	5.20	0.72	0.53	5.59	3.28
68	6.69	5.51	4.72	6.69	1.77	6.30	5.51	0.79	0.53	5.91	3.54
88	7.87	6.50	5.91	8.07	2.17	7.87	7.09	0.89	0.71	7.09	4.13
108	9.06	7.09	7.09	10.04	2.76	9.17	8.35	1.18	0.87	8.19	4.72
128	11.42	9.45	9.45	12.60	2.95	11.61	10.43	1.18	1.02	10.35	5.91
148	13.39	10.63	11.02	15.20	3.74	14.17	12.40	1.58	1.30	12.20	6.89
168	15.75	12.99	13.78	18.11	4.33	16.54	14.76	1.58	1.54	14.41	8.07

	Outline dimensions														
	J1	J2	J3	J4	M1	M2	K	P	L	N	R	T	Q	Ø OD	X
38	1.38	1.26	1.30	1.22	0.63	0.63	8.94	1.10	5.79	2.28	2.48	6.58	0.37	1.77	4.72
48	1.54	1.58	1.58	1.42	0.71	0.71	10.12	1.38	6.54	2.80	2.80	7.36	0.43	2.17	5.91
58	1.68	1.68	1.96	1.79	0.81	0.73	11.3	1.18	7.72	3.15	3.15	8.58	0.39	2.17	6.54
68	1.97	1.97	1.97	1.89	0.87	0.87	12.21	1.18	8.19	3.39	3.54	9.09	0.26	2.56	7.09
88	2.17	2.17	2.17	2.56	0.98	0.98	14.72	1.58	10.31	3.94	4.41	11.61	0.79	3.15	8.27
108	2.76	3.15	2.76	2.91	1.18	1.18	18.11	2.17	12.09	4.53	5.20	13.58	0.51	3.74	9.45
128	3.15	3.15	3.15	3.54	1.38	1.38	20.91	2.95	15.09	5.71	6.30	16.65	0.79	4.33	11.81
148	3.54	4.17	3.54	3.50	1.58	1.58	24.49	3.74	17.67	6.65	7.87	19.80	1.46	4.72	13.78
168	4.33	4.33	4.33	4.33	1.77	1.77	28.47	4.53	20.87	7.84	8.86	23.62	1.97	5.91	16.14

Integral – standard motor dimensions

BB_3GH_

Foot mounted – straight hollow bore

Triple reduction

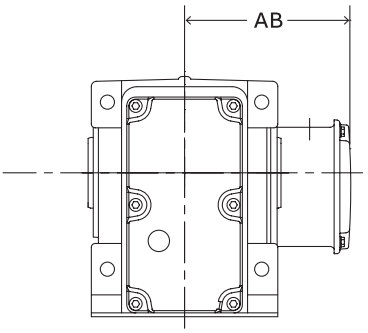

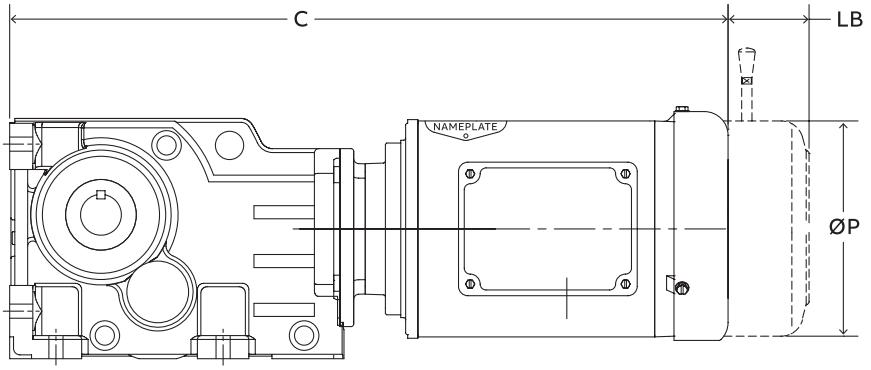

Standard integral motor dimensions 1/4 – 10 Hp

Reducer size	Reducer stage	71C4/71D4/71E4		80F4		80G4		90H4		90I4		100J4		112L4		132M4		132N4	
		C	LB	C	LB	C	LB	C	LB	C	LB	C	LB	C	LB	C	LB	C	LB
38	3	19.47	2.37	19.62	2.11	20.99	1.74	21.09	2.62	21.97	1.74	23.93	1.75	–	–	–	–	–	–
48	3	20.65	2.37	20.80	2.11	22.17	1.74	22.27	2.62	23.15	1.74	25.11	1.75	–	–	–	–	–	–
58	3	21.76	2.37	21.91	2.21	23.28	1.61	23.38	2.62	24.26	1.74	26.11	1.75	27.99	2.50	–	–	–	–
68	3	22.53	2.37	22.68	2.11	24.05	1.74	24.15	2.62	25.03	1.74	26.99	1.75	28.75	2.51	–	–	–	–
88	3	24.80	2.37	24.95	2.11	26.32	1.74	26.42	2.62	27.30	1.74	29.26	1.75	30.95	2.51	32.47	6.38	33.97	6.38
108	3	–	–	27.75	2.11	29.12	1.74	29.22	2.62	30.10	1.74	31.96	1.75	33.61	2.51	35.13	6.38	36.63	6.38
128	3	–	–	–	–	–	–	31.57	2.62	32.45	1.74	34.29	1.75	35.96	2.51	37.44	6.38	38.94	6.38
148	3	–	–	–	–	–	–	–	–	–	–	37.50	1.75	39.12	2.51	40.60	6.38	42.10	6.38
168	3	–	–	–	–	–	–	–	–	–	–	–	–	–	–	44.27	6.38	45.77	6.38

Standard integral motor dimensions 15 – 40 Hp

Reducer size	Reducer stage	160P4		160Q4		180R4		180S4	200T4
		C	LB	C	LB	C	LB	C	C
108	3	38.99	7.02	38.99	7.02	–	–	–	–
128	3	41.34	7.02	41.34	7.02	45.85	5.71	47.60	49.10
148	3	44.27	7.02	44.27	7.02	48.90	5.71	50.65	52.15
168	3	47.96	7.02	47.96	7.02	52.58	5.71	54.33	57.06

See page ENG-20 for additional integral gearmotor information

Integral – washdown motor dimensions

BB_3GH_

Foot mounted – straight hollow bore

Triple reduction

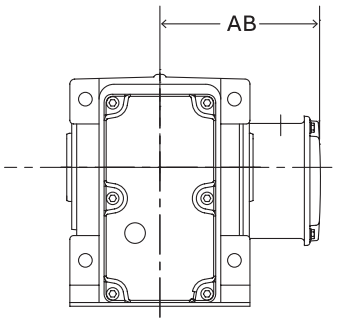

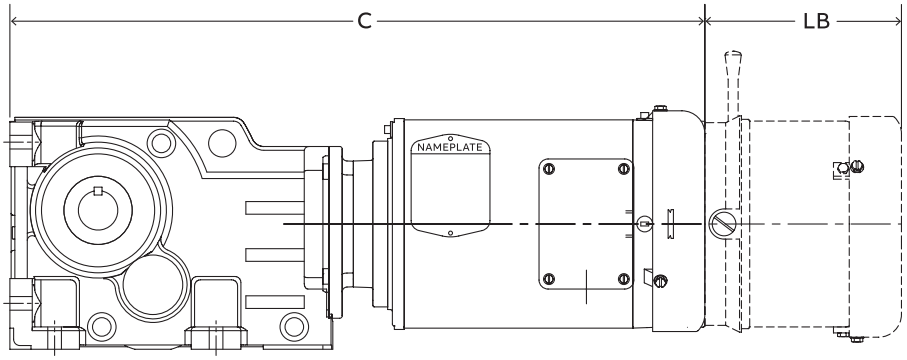

Washdown integral motor dimensions 1/2 – 10 Hp

Reducer size	Reducer stage	71E4		80F4		80G4		90H4		90I4		100J4		112L4		132M4		132N4	
		C	LB	C	LB	C	LB	C	LB	C	LB	C	LB	C	LB	C	LB	C	LB
38	3	20.09	4.81	19.99	4.81	20.99	3.81	21.09	5.26	21.97	5.26	25.32	6.24	–	–	–	–	–	–
48	3	21.27	4.81	21.17	4.81	22.17	3.81	22.27	5.26	23.15	5.26	26.50	6.24	–	–	–	–	–	–
68	3	23.15	4.81	23.05	4.81	24.05	3.81	24.15	5.26	25.03	5.26	28.38	6.24	28.75	5.26	–	–	–	–
88	3	25.42	4.81	25.32	4.81	26.32	3.81	26.42	5.26	27.30	5.26	30.65	6.24	30.95	5.26	32.47	8.44	33.97	8.94
108	3	–	–	28.12	4.81	29.12	3.81	29.22	5.26	30.10	5.26	33.35	6.24	33.61	5.26	35.13	8.44	36.63	8.94
128	3	–	–	–	–	–	–	31.57	5.26	32.45	5.26	35.68	6.24	35.96	5.26	37.44	8.44	38.94	8.94
148	3	–	–	–	–	–	–	–	–	–	–	38.89	6.24	39.12	5.26	40.60	8.44	42.38	8.94
168	3	–	–	–	–	–	–	–	–	–	–	–	–	–	–	44.27	8.44	45.77	8.94

See page ENG-20 for additional integral gearmotor information

Output shaft dimensions

Integral – foot mounted – straight hollow bore

Four- and five-stage reduction

BB_4GH_
BB_5GH_

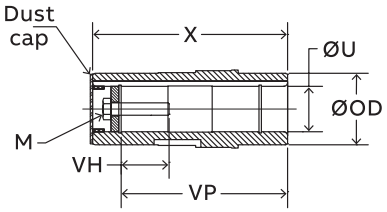

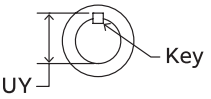

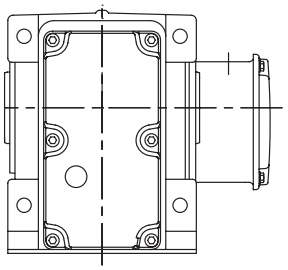

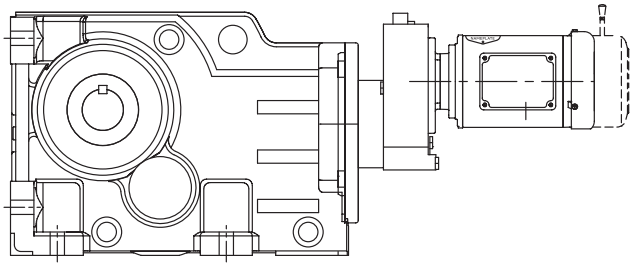

4 Stage reduction

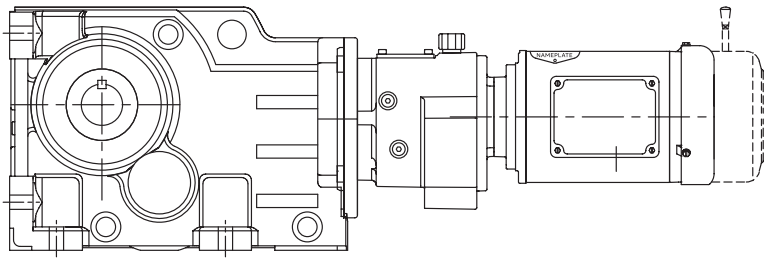

5 Stage reduction

	Standard inch hollow output						Standard metric hollow output					
	Ø U	Tol.	UY	VH	Key	M-Tap	Ø U	Tol.	UY	VH	Key	M-Tap
48	1.375	+0.0010 +0.0004	1.53	1.45	5/16 x 5/16 x 2-3/16	3/8-16 X 1-3/4 UNC	35	+0.025 +0.009	38	43	10 x 8 x 45	M10 x 50
68	1.500	+0.0010 +0.0004	1.68	2.05	3/8 x 3/8 x 3-1/8	5/8-11 X 2-1/4 UNC	40	+0.025 +0.009	43	48	12 x 8 x 50	M16 x 60
88	2.000	+0.0012 +0.0004	2.23	1.89	1/2 x 1/2 x 3-15/16	3/4-10 X 2-1/4 UNC	50	+0.029 +0.010	54	48	14 x 9 x 80	M16 x 36
108	2.375	+0.0012 +0.0004	2.66	2.53	5/8 x 5/8 x 4-1/16	3/4-10 X 3 UNC	60	+0.029 +0.010	64	68	18 x 11 x 100	M20 x 80
128	2.750	+0.0012 +0.0004	3.04	2.51	5/8 x 5/8 x 6-1/8	3/4-10 X 3 UNC	70	+0.029 +0.010	75	68	20 x 12 x 110	M20 x 80
148	3.625	+0.0012 +0.0004	3.84	2.31	7/8 x 7/8 x 7-1/16	1-8 X 2-1/2 UNC	80	+0.034 +0.012	85	68	22 x 14 x 125	M20 x 85
168	4.000	+0.0014 +0.0005	4.45	2.29	1 x 1 x 5-7/8	1-8 X 2-1/2 UNC	100	+0.034 +0.012	106	77	28 x 16 x 160	M24 x 95

See page RHB-205 for optional hollow bore sizes

Gearcase dimensions

BB_4GH_
BB_5GH_

Integral – foot mounted – straight hollow bore
Four- and five-stage reduction

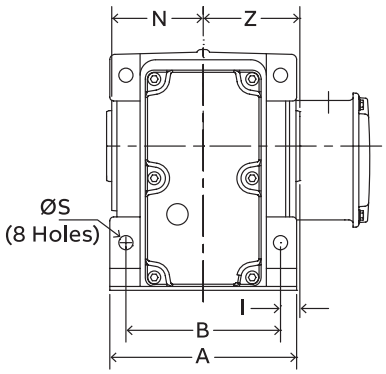

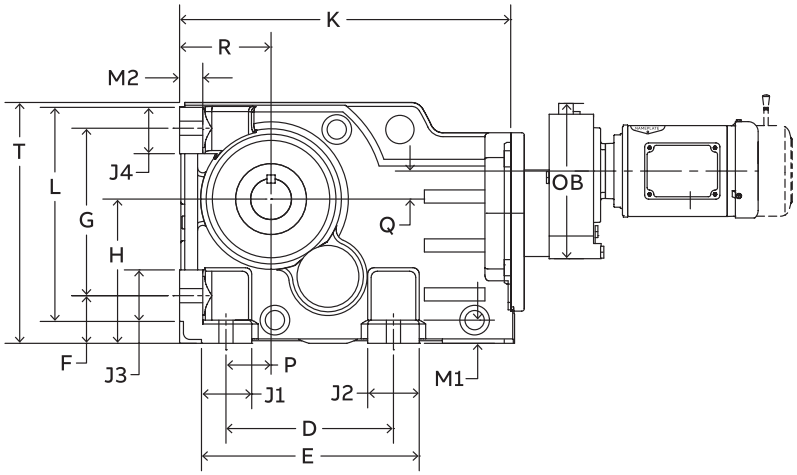

4 Stage reduction

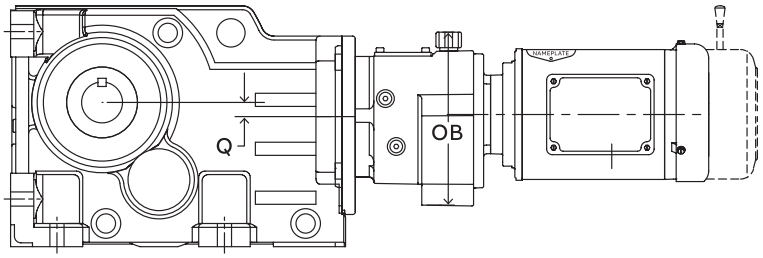

5 Stage reduction

	Mounting dimensions								
	A	B	D	E	F	G	H	I	Ø S
48	5.71	4.72	5.12	6.65	1.45	5.12	4.41	0.59	0.43
68	6.69	5.51	4.72	6.69	1.77	6.30	5.51	0.79	0.53
88	7.87	6.50	5.91	8.07	2.17	7.87	7.09	0.89	0.71
108	9.06	7.09	7.09	10.04	2.76	9.17	8.35	1.18	0.87
128	11.42	9.45	9.45	12.60	2.95	11.61	10.43	1.18	1.02
148	13.39	10.63	11.02	15.20	3.74	14.17	12.40	1.58	1.30
168	15.75	12.99	13.78	18.11	4.33	16.54	14.76	1.58	1.54

	Outline dimensions												4 stage		5 stage	
	J1	J2	J3	J4	M1	M2	K	P	L	N	R	T	Q	OB	Q	OB
48	1.54	1.58	1.58	1.42	0.71	0.71	10.12	1.38	6.54	2.80	2.80	7.36	1.50	7.83	0.43	6.26
68	1.97	1.97	1.97	1.89	0.87	0.87	12.21	1.18	8.19	3.39	3.54	9.09	1.67	7.83	0.26	6.29
88	2.17	2.17	2.17	2.56	0.98	0.98	14.72	1.58	10.31	3.94	4.41	11.61	1.14	7.83	0.79	6.29
108	2.76	3.15	2.76	2.91	1.18	1.18	18.11	2.17	12.09	4.53	5.20	13.58	2.03	9.84	0.51	8.86
128	3.15	3.15	3.15	3.54	1.38	1.38	20.91	2.95	15.09	5.71	6.30	16.65	1.77	9.84	0.79	8.86
148	3.54	4.17	3.54	3.50	1.58	1.58	24.49	3.74	17.67	6.65	7.87	19.80	1.61	11.57	1.46	8.86
168	4.33	4.33	4.33	4.33	1.77	1.77	28.47	4.53	20.87	7.84	8.86	23.62	1.10	11.57	1.97	10.68

Integral – standard motor dimensions

BB_4GH_
BB_5GH_

Foot mounted – straight hollow bore

Four- and five-stage reduction

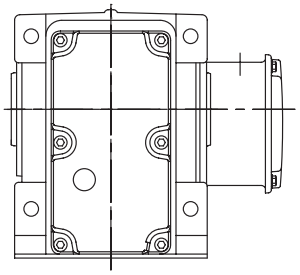

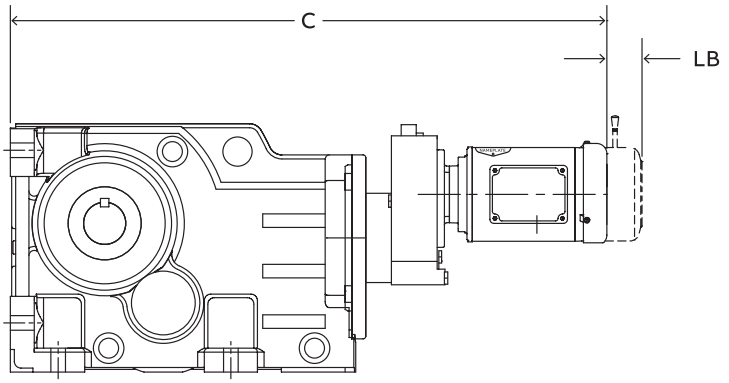

4 Stage reduction

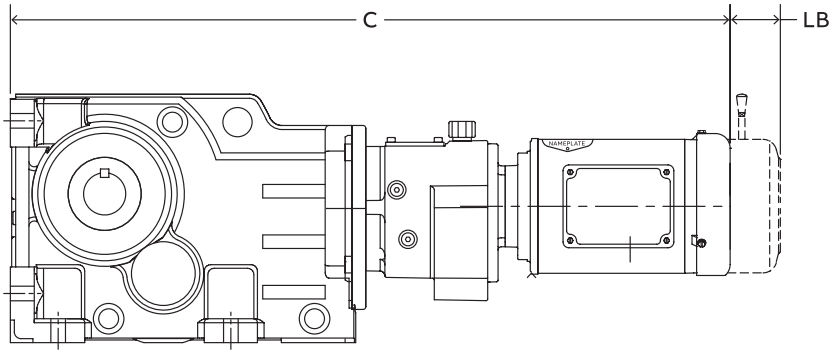

5 Stage reduction

Standard integral motor dimensions 1/4 – 10 Hp

Reducer size	Reducer stage	71C4/71D4/71E4		80F4		80G4		90H4		90I4		100J4		112L4		132M4		132N4	
		C	LB	C	LB	C	LB	C	LB	C	LB	C	LB	C	LB	C	LB	C	LB
48	4	25.61	2.37	25.76	2.11	–	–	–	–	–	–	–	–	–	–	–	–	–	–
	5	26.75	2.37	–	–	–	–	–	–	–	–	–	–	–	–	–	–	–	–
68	4	27.01	2.37	27.16	2.11	28.53	1.74	–	–	–	–	–	–	–	–	–	–	–	–
	5	28.15	2.37	–	–	–	–	–	–	–	–	–	–	–	–	–	–	–	–
88	4	29.32	2.37	29.47	2.11	30.84	1.74	30.94	2.62	–	–	–	–	–	–	–	–	–	–
	5	30.46	2.37	–	–	–	–	–	–	–	–	–	–	–	–	–	–	–	–
108	4	32.72	2.37	32.87	2.11	34.24	1.74	34.34	2.62	35.22	1.74	37.18	1.75	–	–	–	–	–	–
	5	35.04	2.37	–	–	–	–	–	–	–	–	–	–	–	–	–	–	–	–
128	4	35.52	2.37	35.67	2.11	37.04	1.74	37.14	2.62	38.02	1.74	39.98	1.75	41.74	2.51	–	–	–	–
	5	37.84	2.37	–	–	–	–	–	–	–	–	–	–	–	–	–	–	–	–
148	4	40.14	2.37	40.29	2.11	41.66	1.74	41.76	2.62	42.64	1.74	44.60	1.75	46.29	2.51	–	–	–	–
	5	41.36	2.37	41.51	2.11	–	–	–	–	–	–	–	–	–	–	–	–	–	–
168	4	43.96	2.37	44.11	2.11	45.48	1.74	45.58	2.62	46.46	1.74	48.42	1.75	50.11	2.51	51.63	6.38	–	–
	5	44.58	2.37	44.48	2.11	45.48	1.74	45.58	2.62	–	–	–	–	–	–	–	–	–	–

See page ENG-20 for additional integral gearmotor information

Integral – washdown motor dimensions

BB_4GH_
BB_5GH_

Foot mounted – straight hollow bore
Four- and five-stage reduction

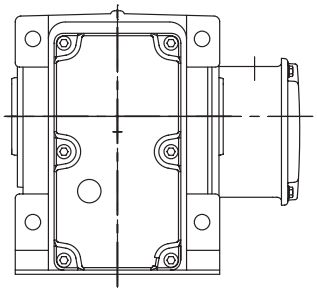

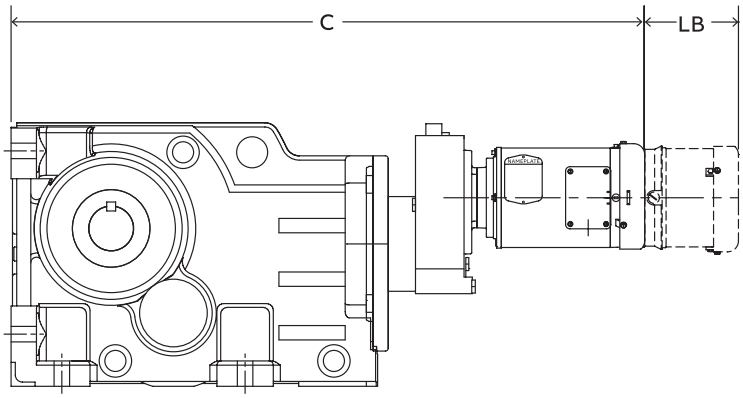

4 Stage reduction

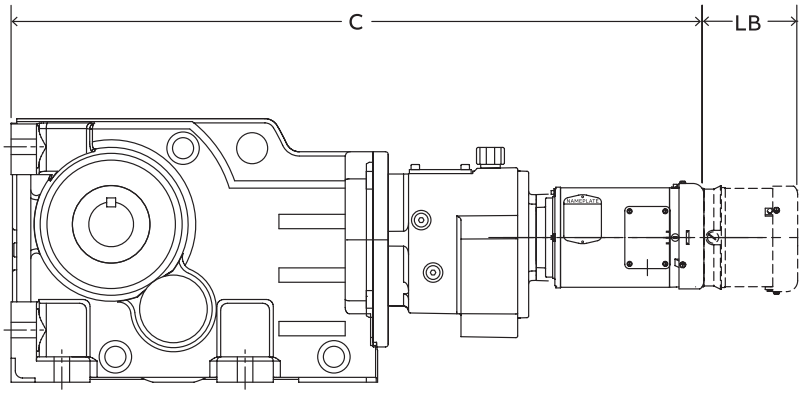

5 Stage reduction

Washdown integral motor dimensions 1/2 – 10 Hp

Reducer size	Reducer stage	71E4		80F4		80G4		90H4		90I4		100J4		112L4		132M4		132N4	
		C	LB	C	LB	C	LB	C	LB	C	LB	C	LB	C	LB	C	LB	C	LB
48	4	26.23	4.81	26.13	4.81	-	-	-	-	-	-	-	-	-	-	-	-	-	-
	5	27.37	4.81	-	-	-	-	-	-	-	-	-	-	-	-	-	-	-	-
68	4	27.63	4.81	27.53	4.81	28.53	3.81	-	-	-	-	-	-	-	-	-	-	-	-
	5	28.77	4.81	-	-	-	-	-	-	-	-	-	-	-	-	-	-	-	-
88	4	29.94	4.81	29.84	4.81	30.84	3.81	30.94	5.26	-	-	-	-	-	-	-	-	-	-
	5	31.08	4.81	-	-	-	-	-	-	-	-	-	-	-	-	-	-	-	-
108	4	33.34	4.81	33.24	4.81	34.24	3.81	34.34	5.26	35.22	5.26	38.57	6.24	-	-	-	-	-	-
	5	35.66	4.81	-	-	-	-	-	-	-	-	-	-	-	-	-	-	-	-
128	4	36.14	4.81	36.04	4.81	37.04	3.81	37.14	5.26	38.02	5.26	41.37	6.24	41.74	5.26	-	-	-	-
	5	38.46	4.81	-	-	-	-	-	-	-	-	-	-	-	-	-	-	-	-
148	4	40.76	4.81	40.66	4.81	41.66	3.81	41.76	5.26	42.64	5.26	45.99	6.24	46.29	5.26	-	-	-	-
	5	41.98	4.81	41.88	4.81	-	-	-	-	-	-	-	-	-	-	-	-	-	-
168	4	44.58	4.81	44.48	4.81	45.48	3.81	45.58	5.26	46.46	5.26	49.81	6.24	50.11	5.26	51.63	8.44	-	-
	5	47.24	4.81	47.14	4.81	48.14	3.81	48.24	5.26	-	-	-	-	-	-	-	-	-	-

See page ENG-20 for additional integral gearmotor information

Output shaft dimensions

Integral – flange mounted – straight hollow bore
Triple reduction

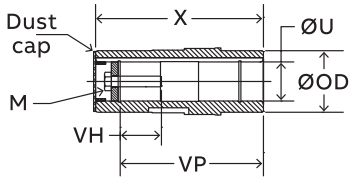

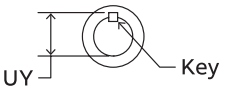

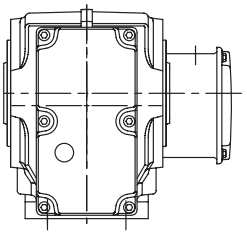

B14 Output flange

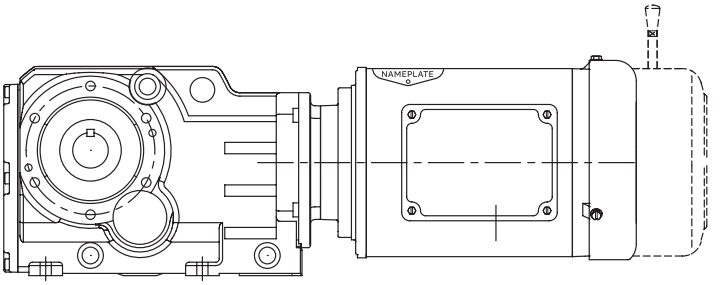

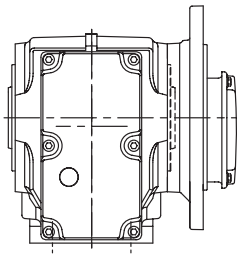

B5 Output flange

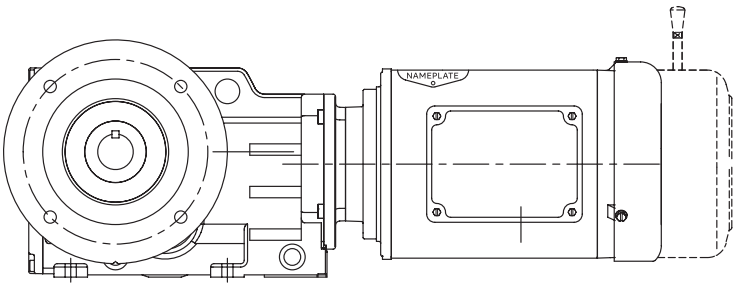

	Standard inch hollow output						Standard metric hollow output					
	Ø U	Tol.	UY	VH	Key	M-Tap	Ø U	Tol.	UY	VH	Key	M-Tap
38	1.250	+0.0010 +0.0004	1.38	1.47	1/4 x 1/4 x 1-7/8	3/8-16 X 1-3/4 UNC	30	+0.020 +0.007	33	31	8 x 7 x 40	M10 x 40
48	1.375	+0.0010 +0.0004	1.53	1.45	5/16 x 5/16 x 2-3/16	3/8-16 X 1-3/4 UNC	35	+0.025 +0.009	38	43	10 x 8 x 45	M10 x 50
58	1.500	+0.0010 +0.0004	1.68	2.05	3/8 x 3/8 x 3-1/8	5/8-11 X 2-1/4 UNC	40	+0.025 +0.009	43	48	12 x 8 x 50	M16 x 60
68	1.500	+0.0010 +0.0004	1.68	2.05	3/8 x 3/8 x 3-1/8	5/8-11 X 2-1/4 UNC	40	+0.025 +0.009	43	48	12 x 8 x 50	M16 x 60
88	2.000	+0.0012 +0.0004	2.23	1.89	1/2 x 1/2 x 3-15/16	3/4-10 X 2-1/4 UNC	50	+0.029 +0.010	54	48	14 x 9 x 80	M16 x 36
108	2.375	+0.0012 +0.0004	2.66	2.53	5/8 x 5/8 x 4-1/16	3/4-10 X 3 UNC	60	+0.029 +0.010	64	68	18 x 11 x 100	M20 x 80
128	2.750	+0.0012 +0.0004	3.04	2.51	5/8 x 5/8 x 6-1/8	3/4-10 X 3 UNC	70	+0.029 +0.010	75	68	20 x 12 x 110	M20 x 80
148	3.625	+0.0012 +0.0004	3.84	2.31	7/8 x 7/8 x 7-1/16	1-8 X 2-1/2 UNC	80	+0.034 +0.012	85	68	22 x 14 x 125	M20 x 85
168	4.000	+0.0014 +0.0005	4.45	2.29	1 x 1 x 5-7/8	1-8 X 2-1/2 UNC	100	+0.034 +0.012	106	77	28 x 16 x 160	M24 x 95

See page RHB-205 for optional hollow bore sizes

Gearcase dimensions

BF_3GH_

Integral – flange mounted – straight hollow bore
Triple reduction

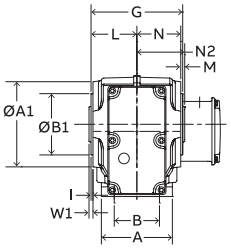

B14 Output flange

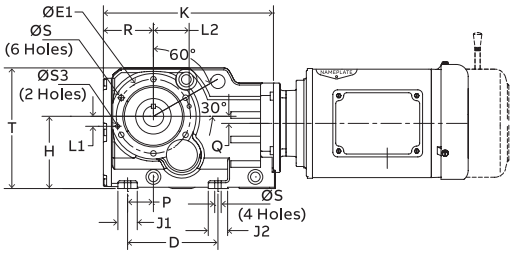

B14 Output flange
Sizes 38-128

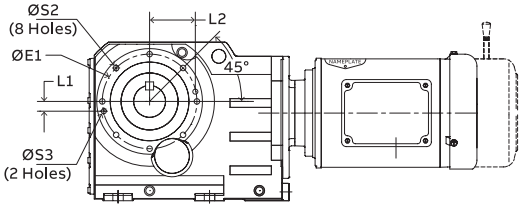

B14 Output flange
Sizes 148-168

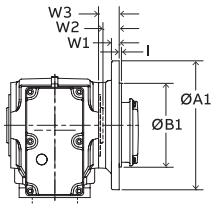

B5 Output flange

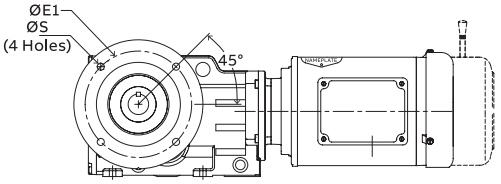

B5 Output flange
Sizes 38-108

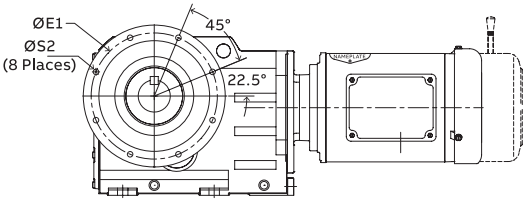

B5 Output flange
Sizes 128-168

	Mounting dimensions							Outline dimensions										
	B	D	H	X	VP	Ø OD	Ø S	A	K	G	L	N	P	Q	R	T	J1	J2
38	2.36	4.61	3.94	4.72	4.02	1.77	M10 X 0.67	3.94	9.21	4.49	2.36	2.24	1.38	0.37	2.76	6.58	1.26	1.26
48	2.76	5.51	4.41	5.91	5.04	2.17	M10 X 0.66	4.33	10.37	5.59	2.80	2.68	1.58	0.43	3.05	7.36	1.18	1.18
58	3.46	5.98	5.20	6.54	5.59	2.17	M12 X 0.93	5.20	11.48	6.30	3.15	2.99	1.85	0.39	3.33	8.63	2.06	2.08
68	3.46	5.98	5.51	7.09	5.91	2.56	M12 X 0.93	5.51	12.15	6.77	3.39	3.25	1.65	0.26	3.48	9.09	1.97	1.97
88	4.53	6.69	7.09	8.27	7.09	3.15	M16 X 1.10	6.69	14.64	7.87	3.80	3.94	1.89	0.79	4.33	11.61	2.17	2.17
108	6.57	8.86	8.35	9.45	8.19	3.74	M16 X 1.10	8.27	18.24	9.06	4.53	4.37	2.56	0.51	5.33	13.58	2.76	2.76
128	8.39	9.76	10.43	11.81	10.35	4.33	M20 X 1.33	10.04	20.77	11.42	5.71	5.55	3.27	0.79	6.16	16.65	3.15	3.15
148	8.27	11.42	12.40	13.78	12.20	4.72	M24 X 1.61	11.26	24.31	13.31	6.65	6.46	3.94	1.46	7.71	19.80	3.54	3.54
168	9.45	13.78	14.76	16.14	14.41	5.91	M30 x 1.57	12.76	28.29	15.67	7.84	7.64	4.53	1.97	8.68	23.62	4.33	4.33

	B14 mounting dimensions									B5 mounting dimensions							
	Ø A1	Ø B1	Ø E1	Ø S2	I	W1	Ø S3	L1	L2	Ø A1	Ø B1	Ø E1	Ø S2	I	W1	W2	W3
38	4.72	3.1497	3.94	M8 X 0.55	0.12	0.24	–	–	–	6.30	4.3308	5.12	0.35	0.14	0.39	0.95	1.18
48	5.20	3.7402	4.53	M10 X 0.66	0.12	0.29	–	–	–	7.87	5.1182	6.50	0.43	0.14	0.47	0.97	1.26
58	5.91	4.3308	5.12	M12 X 0.82	0.16	0.29	–	–	–	9.84	7.0867	8.47	0.53	0.16	0.59	0.90	1.20
68	5.91	4.3308	5.12	M12 X 0.82	0.14	0.30	–	–	–	9.84	7.0867	8.47	0.53	0.16	0.59	0.90	1.20
88	7.48	5.1182	6.50	M12 X 0.82	0.14	0.34	–	–	–	11.81	9.0552	10.43	0.53	0.16	0.63	1.46	1.79
108	9.65	7.0867	8.47	M16 X 1.10	0.16	0.35	0.47	1.10	4.06	13.78	9.8419	11.81	0.69	0.20	0.71	1.42	1.77
128	11.61	9.0552	10.43	M16 X 1.10	0.16	0.35	0.47	1.69	4.92	17.71	13.7788	15.75	0.69	0.20	0.87	1.63	1.99
148	13.19	9.8419	11.81	M20 X 1.33	0.20	0.43	0.63	1.22	5.71	17.71	13.7788	15.75	0.69	0.20	0.87	1.61	2.05
168	15.75	11.8104	13.78	M20 X 1.33	0.20	0.43	0.63	1.46	3.73	21.65	17.7157	19.69	0.69	0.20	0.98	2.01	2.44

Integral – standard motor dimensions

BF_3GH_

Flange mounted – straight hollow bore

Triple reduction

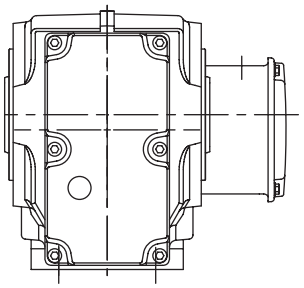

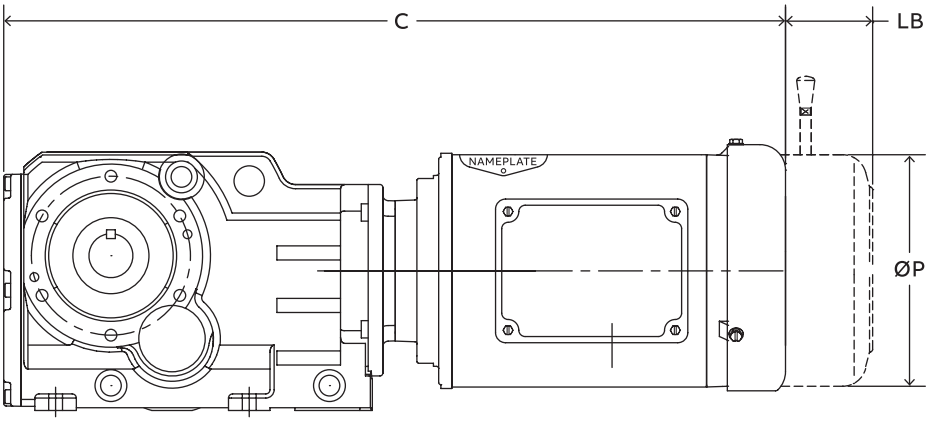

Standard integral motor dimensions 1/4 – 10 Hp

Reducer size	Reducer stage	71C4/71D4/71E4		80F4		80G4		90H4		90I4		100J4		112L4		132M4		132N4	
		C	LB	C	LB	C	LB	C	LB	C	LB	C	LB	C	LB	C	LB	C	LB
38	3	19.74	2.37	19.89	2.11	21.26	1.74	21.36	2.62	22.24	1.74	24.20	1.75	–	–	–	–	–	–
48	3	20.90	2.37	21.05	2.11	22.42	1.74	22.52	2.62	23.40	1.74	25.36	1.75	–	–	–	–	–	–
58	**3**	21.76	2.37	21.91	2.21	23.28	1.61	23.38	2.62	24.26	1.74	26.11	1.75	27.99	2.50	-	-	-	-
68	3	22.47	2.37	22.62	2.11	23.99	1.74	24.09	2.62	24.97	1.74	26.93	1.75	28.69	2.51	–	–	–	–
88	3	24.72	2.37	24.87	2.11	26.24	1.74	26.34	2.62	27.22	1.74	29.18	1.75	30.87	2.51	32.39	6.38	33.89	6.38
108	3	–	–	27.88	2.11	29.25	1.74	29.35	2.62	30.23	1.74	32.09	1.75	33.74	2.51	35.26	6.38	36.76	6.38
128	3	–	–	–	–	–	–	31.43	2.62	32.31	1.74	34.15	1.75	35.82	2.51	37.30	6.38	38.80	6.38
148	3	–	–	–	–	–	–	–	–	–	–	37.32	1.75	38.94	2.51	40.42	6.38	41.92	6.38
168	3	–	–	–	–	–	–	–	–	–	–	–	–	–	–	44.09	6.38	45.59	6.38

Standard integral motor dimensions 15 – 40 Hp

Reducer size	Reducer stage	160P4		160Q4		180R4		180S4	200T4
		C	LB	C	LB	C	LB	C	C
108	3	39.12	7.02	39.12	7.02	–	–	–	–
128	3	41.20	7.02	41.20	7.02	45.71	5.71	48.96	48.92
148	3	44.09	7.02	44.09	7.02	48.72	5.71	51.97	52.07
168	3	47.78	7.02	47.78	7.02	52.40	5.71	55.65	56.88

See page ENG-20 for additional integral gearmotor information

Integral – washdown motor dimensions

BF_3GH_

Flange mounted – straight hollow bore

Triple reduction

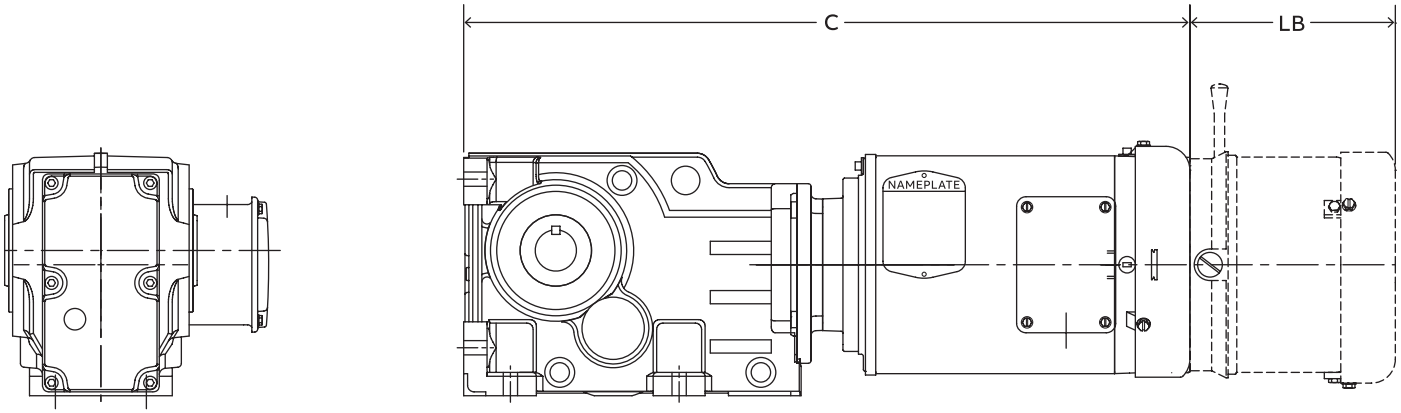

Washdown integral motor dimensions 1/2 – 10 Hp

Reducer size	Reducer stage	71E4		80F4		80G4		90H4		90I4		100J4		112L4		132M4		132N4	
		C	LB	C	LB	C	LB	C	LB	C	LB	C	LB	C	LB	C	LB	C	LB
38	3	20.36	4.81	20.26	4.81	21.26	3.81	21.36	5.26	22.24	5.26	25.59	6.24	–	–	–	–	–	–
48	3	21.52	4.81	21.42	4.81	22.42	3.81	22.52	5.26	23.40	5.26	26.75	6.24	–	–	–	–	–	–
58	3	22.38	4.81	22.38	4.81	23.28	3.81	23.38	5.26	24.26	5.26	27.50	6.24	27.99	5.26	–	–	–	–
68	3	23.09	4.81	22.99	4.81	23.99	3.81	24.09	5.26	24.97	5.26	28.32	6.24	28.69	5.26	–	–	–	–
88	3	25.34	4.81	25.24	4.81	26.24	3.81	26.34	5.26	27.22	5.26	30.57	6.24	30.87	5.26	32.39	8.44	33.89	8.94
108	3	–	–	28.25	4.81	29.25	3.81	29.35	5.26	30.23	5.26	33.48	6.24	33.74	5.26	35.26	8.44	36.76	8.94
128	3	–	–	–	–	–	–	31.43	5.26	32.31	5.26	35.54	6.24	35.82	5.26	37.30	8.44	38.80	8.94
148	3	–	–	–	–	–	–	–	–	–	–	38.71	6.24	38.94	5.26	40.42	8.44	41.92	8.94
168	3	–	–	–	–	–	–	–	–	–	–	–	–	–	–	44.09	8.44	45.59	8.94

See page ENG-20 for additional integral gearmotor information

Output shaft dimensions

Integral – flange mounted – straight hollow bore

Four- and five-stage reduction

BF_4GH_
BF_5GH_

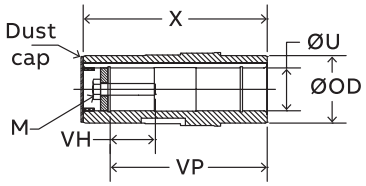

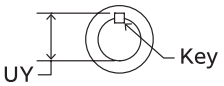

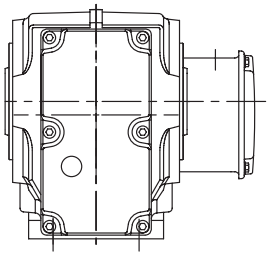

B14 Output flange

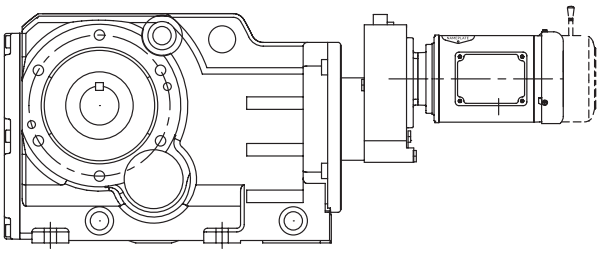

4 Stage reduction

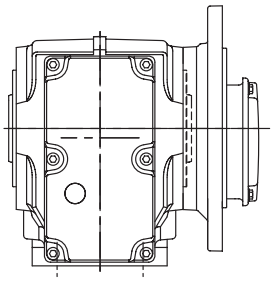

B5 Output flange

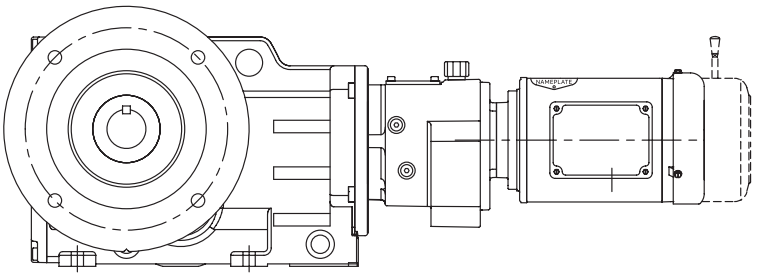

5 Stage reduction

	Standard inch hollow output						Standard metric hollow output					
	Ø U	Tol.	UY	VH	Key	M-Tap	Ø U	Tol.	UY	VH	Key	M-Tap
48	1.375	+0.0010 +0.0004	1.53	1.45	5/16 x 5/16 x 2-3/16	3/8-16 X 1-3/4 UNC	35	+0.025 +0.009	38	43	10 x 8 x 45	M10 x 50
68	1.500	+0.0010 +0.0004	1.68	2.05	3/8 x 3/8 x 3-1/8	5/8-11 X 2-1/4 UNC	40	+0.025 +0.009	43	48	12 x 8 x 50	M16 x 60
88	2.000	+0.0012 +0.0004	2.23	1.89	1/2 x 1/2 x 3-15/16	3/4-10 X 2-1/4 UNC	50	+0.029 +0.010	54	48	14 x 9 x 80	M16 x 36
108	2.375	+0.0012 +0.0004	2.66	2.53	5/8 x 5/8 x 4-1/16	3/4-10 X 3 UNC	60	+0.029 +0.010	64	68	18 x 11 x 100	M20 x 80
128	2.750	+0.0012 +0.0004	3.04	2.51	5/8 x 5/8 x 6-1/8	3/4-10 X 3 UNC	70	+0.029 +0.010	75	68	20 x 12 x 110	M20 x 80
148	3.625	+0.0012 +0.0004	3.84	2.31	7/8 x 7/8 x 7-1/16	1-8 X 2-1/2 UNC	80	+0.034 +0.012	85	68	22 x 14 x 125	M20 x 85
168	4.000	+0.0014 +0.0005	4.45	2.29	1 x 1 x 5-7/8	1-8 X 2-1/2 UNC	100	+0.034 +0.012	106	77	28 x 16 x 160	M24 x 95

See page RHB-205 for optional hollow bore sizes

Gearcase dimensions

BF_4GH_
BF_5GH_

Integral – flange mounted – straight hollow bore
Four- and five-stage reduction

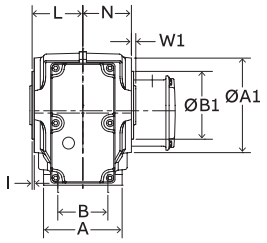

B14 Output flange
Sizes 38-168

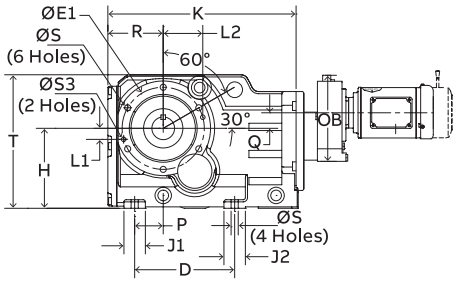

B14 Output flange
Sizes 38-128

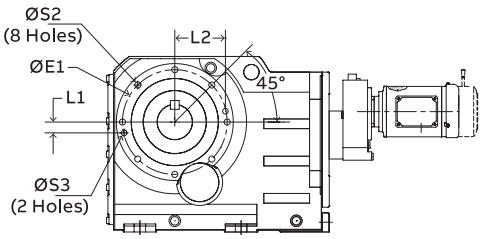

B14 Output flange
Sizes 148-168

4 Stage reduction

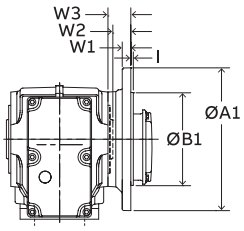

B5 Output flange
Sizes 38-168

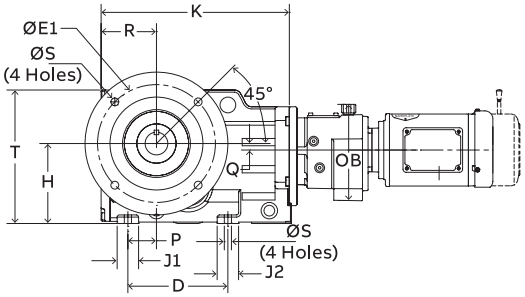

B5 Output flange
Sizes 38-108

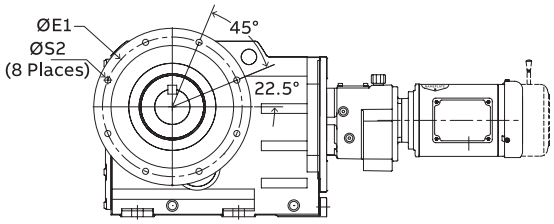

B5 Output flange
Sizes 128-168

5 Stage reduction

	Mounting dimensions				Outline dimensions									4 stage		5 stage	
	B	D	H	Ø S	A	K	L	N	P	R	T	J1	J2	Q	OB	Q	OB
48	2.76	5.51	4.41	M10 X 0.66	4.33	10.37	2.80	2.68	1.58	3.05	7.36	1.18	1.18	1.50	7.83	0.43	6.26
68	3.46	5.98	5.51	M12 X 0.93	5.51	12.15	3.39	3.25	1.65	3.48	9.09	1.97	1.97	1.67	7.83	0.26	6.29
88	4.53	6.69	7.09	M16 X 1.10	6.69	14.64	3.80	3.94	1.89	4.33	11.61	2.17	2.17	1.14	7.83	0.79	6.29
108	6.57	8.86	8.35	M16 X 1.10	8.27	18.24	4.53	4.37	2.56	5.33	13.58	2.76	2.76	2.03	9.84	0.51	8.86
128	8.39	9.76	10.43	M20 X 1.33	10.04	20.77	5.71	5.55	3.27	6.16	16.65	3.15	3.15	1.77	9.84	0.79	8.86
148	8.27	11.42	12.40	M24 X 1.61	11.26	24.31	6.65	6.46	3.94	7.71	19.80	3.54	3.54	1.61	11.57	1.46	8.86
168	9.45	13.78	14.76	M30 x 1.57	12.76	28.29	7.84	7.64	4.53	8.68	23.62	4.33	4.33	1.10	11.57	1.97	10.68

	B14 mounting dimensions									B5 mounting dimensions							
	Ø A1	Ø B1	Ø E1	Ø S2	I	W1	Ø S3	L1	L2	Ø A1	Ø B1	Ø E1	Ø S2	I	W1	W2	W3
48	5.20	3.7402	4.53	M10 X 0.66	0.12	0.29	–	–	–	7.87	5.1182	6.50	0.43	0.14	0.47	0.97	1.26
68	5.91	4.3308	5.12	M12 X 0.82	0.14	0.30	–	–	–	9.84	7.0867	8.47	0.53	0.16	0.30	0.59	1.20
88	7.48	5.1182	6.50	M12 X 0.82	0.14	0.34	–	–	–	11.81	9.0552	10.43	0.53	0.16	0.63	1.46	1.79
108	9.65	7.0867	8.47	M16 X 1.10	0.16	0.35	0.47	1.10	4.06	13.78	9.8419	11.81	0.69	0.20	0.71	1.42	1.77
128	11.61	9.0552	10.43	M16 X 1.10	0.16	0.35	0.47	1.69	4.92	17.71	13.7788	15.75	0.69	0.20	0.87	1.63	1.99
148	13.19	9.8419	11.81	M20 X 1.33	0.20	0.43	0.63	1.22	5.71	17.71	13.7788	15.75	0.69	0.20	0.87	1.61	2.05
168	15.75	11.8104	13.78	M20 X 1.33	0.20	0.43	0.63	1.46	3.73	21.65	17.7157	19.69	0.69	0.20	0.98	2.01	2.44

Integral – standard motor dimensions

BF_4GH_
BF_5GH_

Flange mounted – straight hollow bore
Four- and five-stage reduction

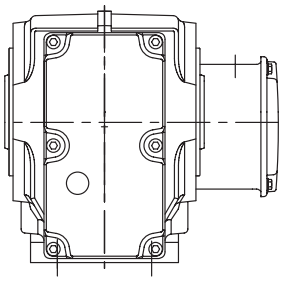

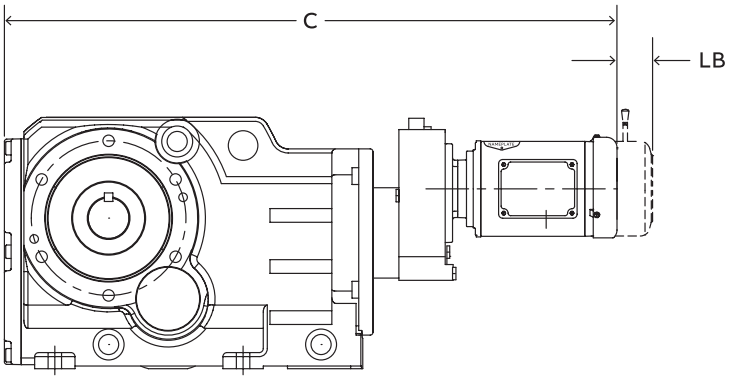

4 Stage reduction

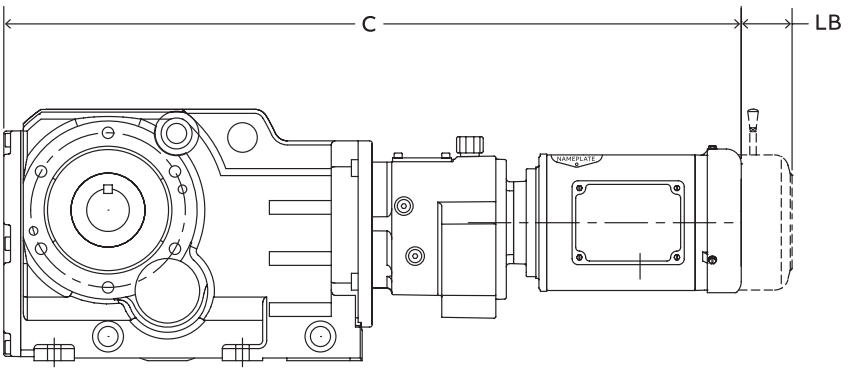

5 Stage reduction

Standard integral motor dimensions 1/4 – 10 Hp

Reducer size	Reducer stage	71C4/71D4/71E4		80F4		80G4		90H4		90I4		100J4		112L4		132M4		132N4	
		C	LB	C	LB	C	LB	C	LB	C	LB	C	LB	C	LB	C	LB	C	LB
48	4	25.86	2.37	26.01	2.11	–	–	–	–	–	–	–	–	–	–	–	–	–	–
	5	27.00	2.37	–	–	–	–	–	–	–	–	–	–	–	–	–	–	–	–
68	4	26.95	2.37	27.10	2.11	28.47	1.74	–	–	–	–	–	–	–	–	–	–	–	–
	5	28.09	2.37	–	–	–	–	–	–	–	–	–	–	–	–	–	–	–	–
88	4	29.26	2.37	29.41	2.11	30.78	1.74	30.88	2.62	–	–	–	–	–	–	–	–	–	–
	5	30.40	2.37	–	–	–	–	–	–	–	–	–	–	–	–	–	–	–	–
108	4	32.78	2.37	32.93	2.11	34.30	1.74	34.40	2.62	35.28	1.74	37.24	1.75	–	–	–	–	–	–
	5	35.10	2.37	–	–	–	–	–	–	–	–	–	–	–	–	–	–	–	–
128	4	35.58	2.37	35.73	2.11	37.10	1.74	37.20	2.62	38.08	1.74	40.04	1.75	41.80	2.51	–	–	–	–
	5	37.90	2.37	–	–	–	–	–	–	–	–	–	–	–	–	–	–	–	–
148	4	39.51	2.37	39.66	2.11	41.03	1.74	41.13	2.62	42.01	1.74	43.97	1.75	45.66	2.51	–	–	–	–
	5	40.73	2.37	40.88	2.11	–	–	–	–	–	–	–	–	–	–	–	–	–	–
168	4	43.37	2.37	43.52	2.11	44.89	1.74	44.99	2.62	45.87	1.74	47.83	1.75	49.52	2.51	51.04	6.38	–	–
	5	46.03	2.37	46.18	2.11	47.55	1.74	47.65	2.62	–	–	–	–	–	–	–	–	–	–

See page ENG-20 for additional integral gearmotor information

Integral – washdown motor dimensions

BF_4GH_
BF_5GH_

Flange mounted – straight hollow bore

Four- and five-stage reduction

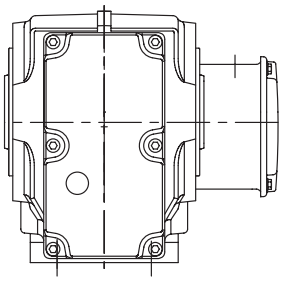

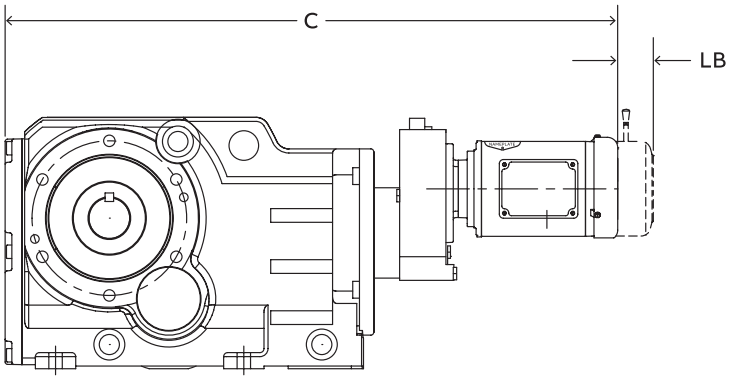

4 Stage reduction

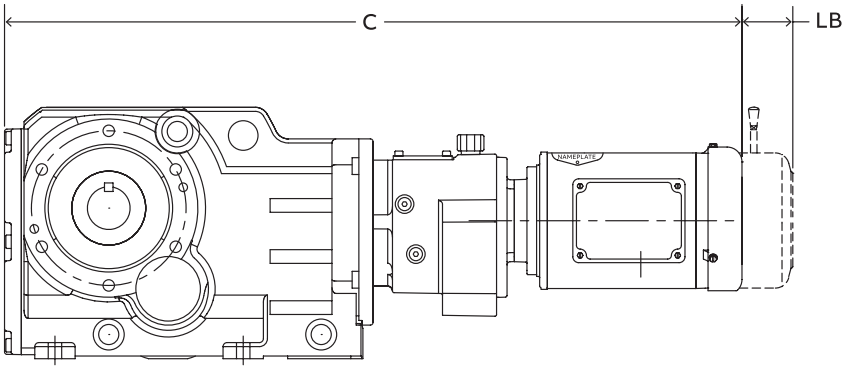

5 Stage reduction

Washdown integral motor dimensions 1/2 – 10 Hp

Reducer size	Reducer stage	71E4		80F4		80G4		90H4		90I4		100J4		112L4		132M4		132N4	
		C	LB	C	LB	C	LB	C	LB	C	LB	C	LB	C	LB	C	LB	C	LB
48	4	26.48	4.81	26.38	4.81	–	–	–	–	–	–	–	–	–	–	–	–	–	–
	5	27.62	4.81	–	–	–	–	–	–	–	–	–	–	–	–	–	–	–	–
68	4	27.57	4.81	27.47	4.81	28.47	3.81	–	–	–	–	–	–	–	–	–	–	–	–
	5	28.71	4.81	–	–	–	–	–	–	–	–	–	–	–	–	–	–	–	–
88	4	29.88	4.81	29.78	4.81	30.78	3.81	30.88	5.26	–	–	–	–	–	–	–	–	–	–
	5	31.02	4.81	–	–	–	–	–	–	–	–	–	–	–	–	–	–	–	–
108	4	33.40	4.81	33.30	4.81	34.30	3.81	34.40	5.26	35.28	5.26	38.63	6.24	–	–	–	–	–	–
	5	35.72	4.81	–	–	–	–	–	–	–	–	–	–	–	–	–	–	–	–
128	4	36.20	4.81	36.10	4.81	37.10	3.81	37.20	5.26	38.08	5.26	41.43	6.24	41.80	5.26	–	–	–	–
	5	38.52	4.81	–	–	–	–	–	–	–	–	–	–	–	–	–	–	–	–
148	4	40.13	4.81	40.03	4.81	41.03	3.81	41.13	5.26	42.01	5.26	45.36	6.24	45.66	5.26	–	–	–	–
	5	41.35	4.81	41.25	4.81	–	–	–	–	–	–	–	–	–	–	–	–	–	–
168	4	43.99	4.81	43.89	4.81	44.89	3.81	44.99	5.26	45.87	5.26	49.22	6.24	49.52	5.26	51.04	8.44	–	–
	5	46.65	4.81	46.55	4.81	47.55	3.81	47.65	5.26	–	–	–	–	–	–	–	–	–	–

See page ENG-20 for additional integral gearmotor information

Optional output shafts

Foot and flanged mounted

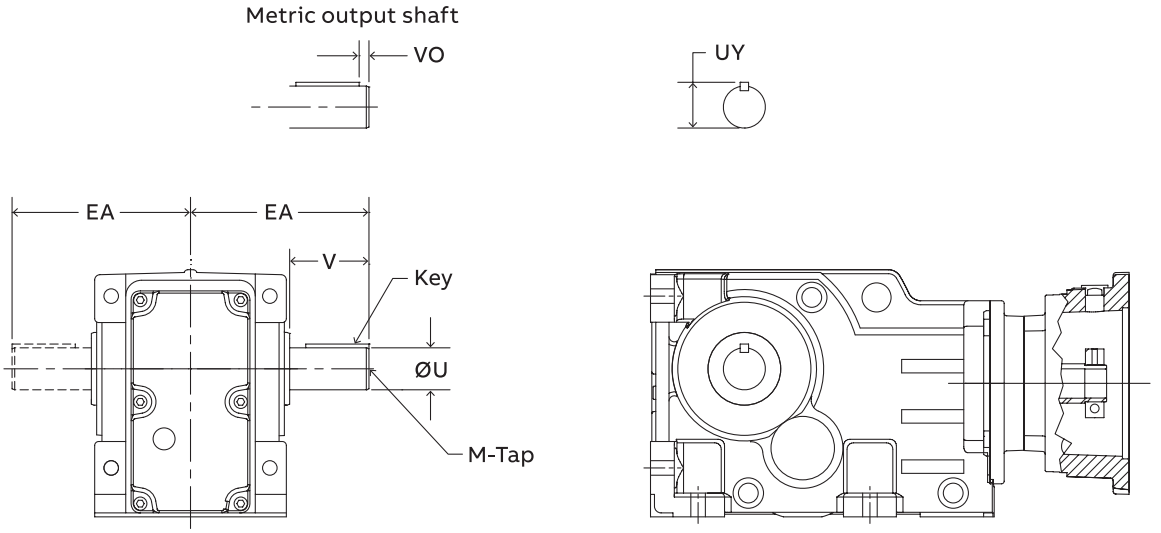

Foot mounted

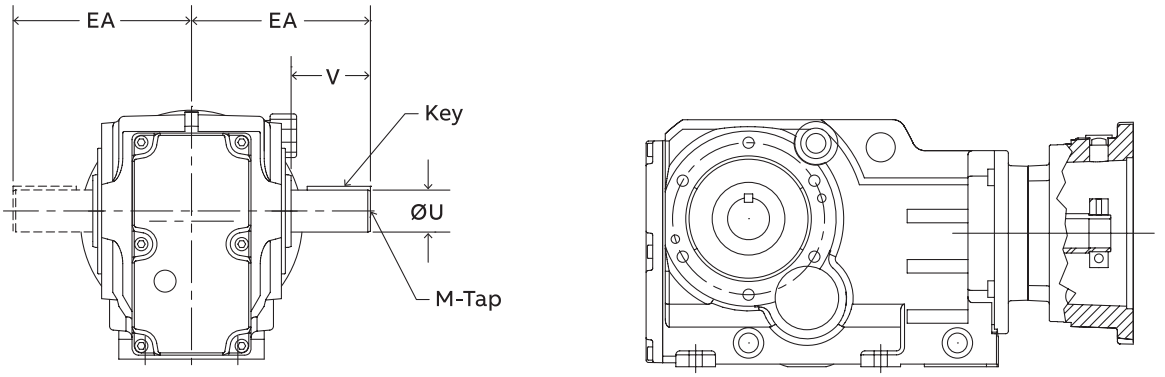

Flange mounted

	Optional inch output shaft							Optional metric output shaft (dimensions in mm)							
	Ø U	Tol.	UY	V	EA	Key	M-Tap	Ø U	Tol.	UY	V	Vo	EA	Key	M-Tap
B_38	1.375	+0.0000 -0.0005	1.52	2.76	5.12	5/16 x 5/16 x 2-3/8	3/8-16 UNC X 0.87	35	+0.018 +0.002	38	70	5	130	10 x 8 x 56	M12 x 28
B_48	1.625	+0.0000 -0.0010	1.80	3.15	6.10	3/8 x 3/8 x 2-5/8	5/8-11 UNC X 1.42	40	+0.018 +0.002	43	80	5	155	12 x 8 x 70	M16 x 36
B_68	2.000	+0.0000 -0.0010	2.22	3.94	7.48	1/2 x 1/2 x 3-1/4	3/4-10 UNC X 1.65	50	+0.018 +0.002	54	100	10	190	14 x 9 x 80	M16 x 36
B_88	2.750	+0.0000 -0.0010	3.03	5.51	9.65	5/8 x 5/8 x 4-9/16	3/4-10 UNC X 1.65	70	+0.030 +0.011	75	140	15	245	20 x 12 x 110	M20 x 42
B_108	3.1875	+0.0000 -0.0010	3.52	6.69	11.42	3/4 x 3/4 x 5-3/8	3/4-10 UNC X 1.65	80	+0.030 +0.011	85	170	20	290	22 x 14 x 125	M20 x 42
B_128	3.625	+0.0000 -0.0010	4.01	6.69	12.60	7/8 x 7/8 x 5-5/8	1-8 UNC X 1.97	90	+0.035 +0.013	95	170	15	320	25 x 14 x 140	M24 x 50
B_148	4.000	+0.0000 -0.0010	4.44	8.27	15.16	1 x 1 x 7-1/8	1-8 UNC X 1.97	100	+0.035 +0.013	106	210	15	385	28 x 16 x 180	M24 x 50
B-168	4.750	+0.0000 -0.0010	5.30	8.27	16.34	1-1/4 x 1-1/4 x 7	1-8 UNC X 1.97	120	+0.035 +0.013	127	210	15	415	32 x 18 x 180	M24 x 50

Optional straight hollow bores

Foot and flanged mounted

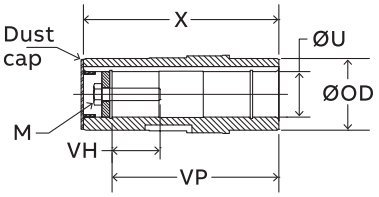

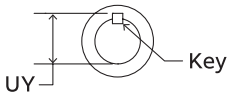

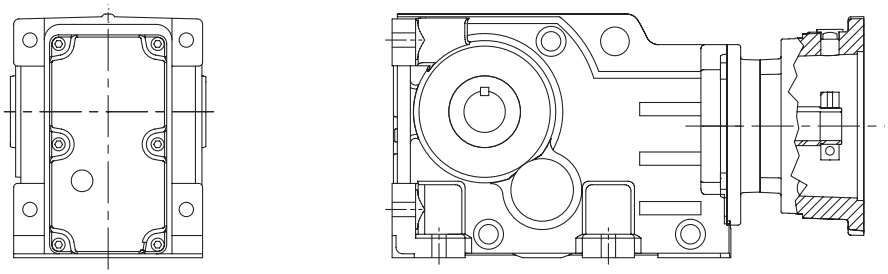

Foot mounted

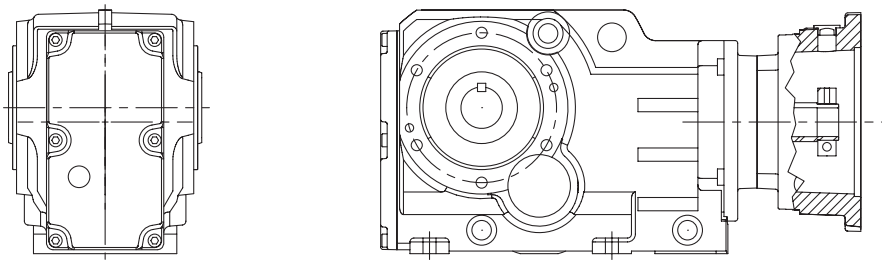

Flange mounted

	Standard inch hollow output						Standard metric hollow output					
	Ø U	Tol.	UY	VH	Key	M-Tap	Ø U	Tol.	UY	VH	Key	M-Tap
B_48	1.250	+0.0010 +0.0004	1.38	1.47	1/4 x 1/4 x 2-3/16	3/8-16 X 1-3/4 UNC	40	+0.025 +0.009	43.3	48	12 x 8 x 50	M16 x 60
B_68	1.4375	+0.0010 +0.0004	1.62	1.98	3/8 x 3/8 x 3-3/8	3/8-16 X 2-1/4 UNC	45	+0.025 +0.009	49	47	14 x 9 x 70	M16 x 60
B_88	1.9375	+0.0012 +0.0004	2.17	1.89	1/2 x 1/2 x 3-7/16	5/8-11 X 2-1/4 UNC	60	+0.029 +0.010	64	58	18 x 11 x 100	M20 x 70
B_108	2.4375	+0.0012 +0.0004	2.72	2.51	5/8 x 5/8 x 4	3/4-10 X 3 UNC	70	+0.029 +0.010	75	67	20 x 12 x 110	M20 x 80
B_128	2.9375	+0.0012 +0.0004	3.28	2.31	3/4 x 3/4 x 4-7/8	3/4-10 X 3 UNC	80	+0.029 +0.010	85	67	22 x 14 x 125	M20 x 85
B_148	3.4375	+0.0014 +0.0005	3.70	2.29	7/8 x 3/4 x 7-7/16	1-8 X 2-1/2 UNC	90	+0.034 +0.012	95	77	25 x 14 x 140	M24 x 95
B_168	3.9375	+0.0014 +0.0005	4.39	2.13	1 x 1 x 6	1-8 X 2-1/2 UNC	110	+0.034 +0.012	116	78	28 x 16 x 160	M24 x 100

Twin-tapered bushings

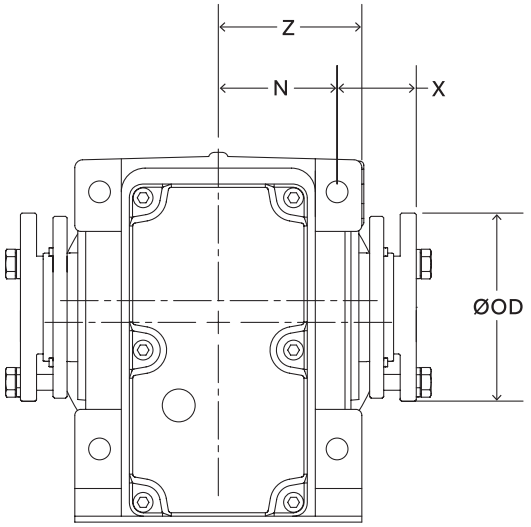

Foot mounted

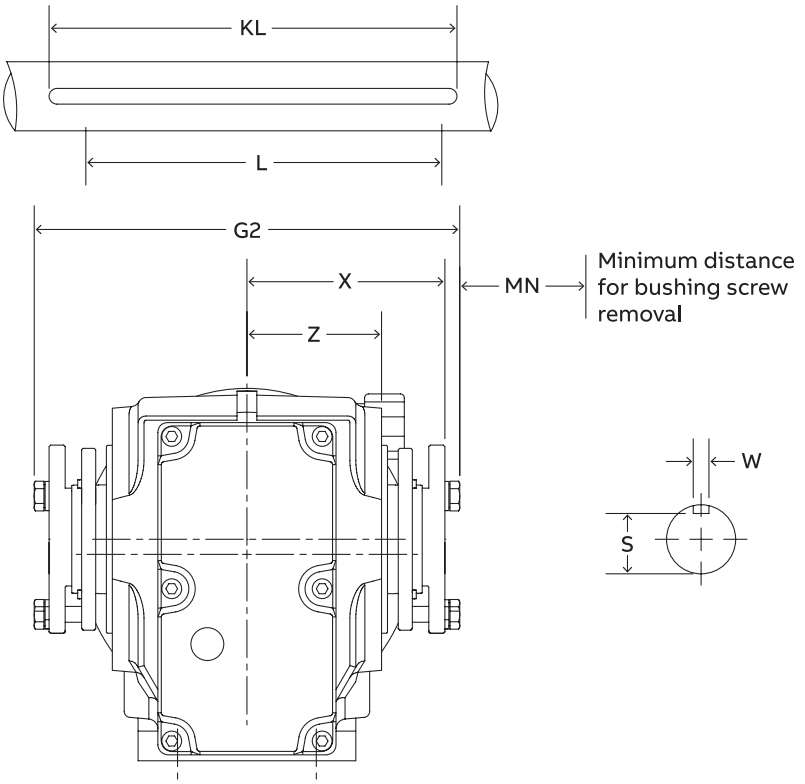

Flange mounted

RHB gearcase dimensions

	Ø OD	MN	Foot mounted			Flange mounted		
			N	X	Z	Z	X	G2
38	2.91	1.3	1.97	1.52	2.28	2.13	3.49	7.56
48	3.75	1.3	2.36	1.74	2.85	2.68	4.10	8.78
58	3.75	1.3	2.56	1.89	3.15	3.15	4.47	9.52
68	3.96	1.5	2.76	2.11	3.35	3.25	4.87	10.42
88	4.88	1.5	3.25	2.19	3.94	3.80	5.44	11.57
108	5.50	1.5	3.54	2.43	5.97	4.53	5.97	12.80
128	6.38	1.9	4.72	2.68	7.40	5.55	7.40	16.37
148	6.50	1.9	5.32	3.07	8.38	6.46	8.38	18.23
168	7.75	2.1	6.5	3.27	9.76	7.64	9.76	21.06

RHB Size 38

Part number	RHB Size 38	Bore	Weight (lb)	L (4)	Part number	RHB Size 38	Bore	Weight (lb)	L (4)	Shaft keyseat W	Shaft keyseat S	KL (3)
094601	Special (5)	1.4375”	2.0		–	–	–	–	–	–	–	
093105	Standard (1)	1.3750”	2.0		–	–	–	–	–	0.3125”	1.201”	
093106	Standard	1.3125”	2.0		–	–	–	–	–	0.3125”	1.137”	
093107	Standard	1.2500”	2.4		–	–	–	–	–	0.250”	1.112”	
093108	Standard	1.1875”	2.0		**093115**	Short Shaft (2)	1.1875”	2.0		0.250”	1.049”	
093109	Standard	1.1250”	2.0	6.75”	**093116**	Short Shaft	1.1250”	2.0	5.1875”	0.250”	0.986”	7.00”
093110	Standard	1.0000”	2.0		**093117**	Short Shaft	1.0000”	2.0		0.250”	0.859”	
093111	Standard	35 MM	2.0		–	–	–	–	–	10 mm	30 mm	
093112	Standard	32 MM	2.0		–	–	–	–	–	10 mm	27 mm	
093113	Standard	30 MM	2.0		**093118**	Short Shaft	30 MM	2.0	5.1875”	8 mm	26 mm	
093114	Standard	25 MM	2.0		**093119**	Short Shaft	25 MM	2.0		8 mm	21 mm	

RHB Size 48

Part number	RHB Size 48	Bore	Weight (lb)	L (4)	Part number	RHB Size 48	Bore	Weight (lb)	L (4)	Shaft keyseat W	Shaft keyseat S	KL (3)
092593	Standard (1)	1.5000"	3.3		–	–	–	–	–	0.375"	1.289"	
092594	Standard	1.4375"	3.6		**092607**	Short Shaft (2)	1.4375"	3.7		0.375"	1.225"	
092595	Standard	1.3750"	3.5		**092608**	Short Shaft	1.3750"	4.1		0.3125"	1.201"	
092596	Standard	1.3125"	3.8		**092609**	Short Shaft	1.3125"	4.0		0.3125"	1.137"	
092597	Standard	1.2500"	3.7		**092610**	Short Shaft	1.2500"	4.1	5.6875"	0.250"	1.112"	
092598	Standard	1.1875"	3.8		**092611**	Short Shaft	1.1875"	4.2		0.250"	1.049"	
092599	Standard	1.1250"	4.0	7.875”	**092612**	Short Shaft	1.1250"	4.4		0.250"	0.986"	8.1875”
092600	Standard	1.0625"	4.0		**092613**	Short Shaft	1.0625"	4.5		0.250"	0.923"	
092601	Standard	1.0000"	4.2		**092614**	Short Shaft	1.0000"	4.7		0.250"	0.859"	
092602	Standard	40 MM	3.3		–	–	–	–	–	12 mm	35 mm	
092603	Standard	38 MM	3.3		–	–	–	–	–	12 mm	33 mm	
092604	Standard	35 MM	3.6		**092615**	Short Shaft	35 MM	3.9		10 mm	30 mm	
092605	Standard	32 MM	3.8		**092616**	Short Shaft	32 MM	4.2	5.6875"	10 mm	27 mm	
092606	Standard	30 MM	3.8		**092617**	Short Shaft	30 MM	4.3		10 mm	25 mm	

RHB Size 58

Part number	RHB Size 58	Bore	Weight (lb)	L (4)	Part number	RHB Size 58	Bore	Weight (lb)	L (4)	Shaft keyseat W	Shaft keyseat S	KL (3)
084500	Standard (1)	1.5000"	3.3		–	–	–	–	–	0.375"	1.289"	
084492	Standard	1.4375"	3.6		**084516**	Short Shaft (2)	1.4375"	3.7		0.375"	1.225"	
084484	Standard	1.3750"	3.5		**084515**	Short Shaft	1.3750"	4.1		0.3125"	0.3125"	
084476	Standard	1.3125"	3.8		**084514**	Short Shaft	1.3125"	4.0		0.3125"	0.3125"	
084471	Standard	1.2500"	3.7		**084513**	Short Shaft	1.2500"	4.1	6.4375"	0.250"	0.250"	
084468	Standard	1.1875"	3.8		**084512**	Short Shaft	1.1875"	4.2		0.250"	0.250"	
084466	Standard	1.1250"	4.0	8.625"	**084510**	Short Shaft	1.1250"	4.4		0.250"	0.250"	8.9375"
084465	Standard	1.0625"	4.0		**084509**	Short Shaft	1.0625"	4.5		0.250"	0.250"	
084453	Standard	1.0000"	4.2		**084506**	Short Shaft	1.0000"	4.7		0.250"	0.250"	
084529	Standard	40 MM	3.3		–	–	–	–	–	12 mm	35 mm	
084522	Standard	38 MM	3.3		–	–	–	–	–	12 mm	33 mm	
084519	Standard	35 MM	3.6		**084537**	Short Shaft	35 MM	3.9		10 mm	30 mm	
084518	Standard	32 MM	3.8		**084536**	Short Shaft	32 MM	4.2	6.4375"	10 mm	27 mm	
084517	Standard	30 MM	3.8		**084531**	Short Shaft	30 MM	4.3		10 mm	25 mm	

Twin-tapered bushings

RHB Size 68

Part number	RHB Size 68	Bore	Weight (lb)	L (4)	Part number	RHB Size 68	Bore	Weight (lb)	L (4)	Shaft keyseat W	Shaft keyseat S	KL (3)
093121	Standard (1)	1.8750"	5.0	9.375"	–	–	–	–	–	0.500"	1.591"	9.75"
093122	Standard	1.7500"	5.0		–	–	–	–	–	0.375"	1.542"	
093123	Standard	1.6875"	5.0		–	–	–	–	–	0.375"	1.479"	
093124	Standard	1.6250"	5.0		–	–	–	–	–	0.375"	1.416"	
093125	Standard	1.5000"	5.0		**093132**	Short Shaft (2)	1.5000"	5.0		0.375"	1.289"	
093126	Standard	1.4375"	5.0		**093133**	Short Shaft	1.4375"	5.0		0.375"	1.225"	
093127	Standard	1.3750"	5.0		**093134**	Short Shaft	1.3750"	5.0		0.3125"	1.201"	
093128	Standard	1.3125"	5.0		**093135**	Short Shaft	1.3125"	5.0	7.25"	0.3125"	1.137"	
093129	Standard	1.2500"	5.0		**093136**	Short Shaft	1.2500"	5.0		0.250"	1.112"	
093130	Standard	1.1875"	5.0		**093137**	Short Shaft	1.1875"	5.0		0.250"	1.049"	
093131	Standard	1.1250"	5.0		**093138**	Short Shaft	1.1250"	5.0		0.250"	0.986"	
093139	Standard	45 MM	5.0		–	–	–	–	–	14 mm	39.5 mm	
093140	Standard	42 MM	5.0		–	–	–	–	–	12 mm	37 mm	
093141	Standard	40 MM	5.0		**093146**	Short Shaft	40 MM	5.0		12 mm	35 mm	
093142	Standard	38 MM	5.0		**093147**	Short Shaft	38 MM	5.0		12 mm	33 mm	
093143	Standard	35 MM	5.0		**093148**	Short Shaft	35 MM	5.0	7.25"	10 mm	30 mm	
093144	Standard	32 MM	5.0		**093149**	Short Shaft	32 MM	5.0		10 mm	27 mm	
093145	Standard	30 MM	5.0		**093150**	Short Shaft	30 MM	5.0		8 mm	26 mm	

RHB Size 88

Part number	RHB Size 88	Bore	Weight (lb)	L (4)	Part number	RHB Size 88	Bore	Weight (lb)	L (4)	Shaft keyseat W	Shaft keyseat S	KL (3)
092619	Standard (1)	2.3750"	6.1	10.50"	–	–	–	–	–	0.625"	2.021"	11.25"
092620	Standard	2.2500"	6.2		–	–	–	–	–	0.500"	1.893"	
092621	Standard	2.1875"	6.8		**092631**	Short Shaft (2)	2.1875"	7.0		0.500"	1.909"	
092622	Standard	2.1250"	7.0		**092632**	Short Shaft	2.1250"	7.4		0.500"	1.845"	
092623	Standard	2.0000"	7.5		**092633**	Short Shaft	2.0000"	8.0		0.500"	1.718"	
092624	Standard	1.9375"	7.8		**092634**	Short Shaft	1.9375"	8.4		0.500"	1.655"	
092625	Standard	1.8750"	8.0		**092635**	Short Shaft	1.8750"	8.7	7.5625"	0.500"	1.591"	
092626	Standard	1.7500"	8.0		**092636**	Short Shaft	1.7500"	9.0		0.375"	1.542"	
092627	Standard	1.6875"	8.2		**092637**	Short Shaft	1.6875"	9.3		0.375"	1.479"	
092628	Standard	1.6250"	8.4		**092638**	Short Shaft	1.6250"	9.6		0.375"	1.416"	
092629	Standard	1.5000"	8.8		**092639**	Short Shaft	1.5000"	9.9		0.375"	1.289"	
092630	Standard	1.4375"	8.8		**092640**	Short Shaft	1.4375"	10.0		0.375"	1.225"	
092641	Standard	60 MM	6.2		–	–	–	–	–	18 mm	53 mm	
092642	Standard	55 MM	6.8		**092649**	Short Shaft	55 MM	7.1		16 mm	49 mm	
092643	Standard	50 MM	7.5		**092650**	Short Shaft	50 MM	8.1		14 mm	44.5 mm	
092644	Standard	45 MM	8.1		**092651**	Short Shaft	45 MM	9.0		14 mm	39.5 mm	
092645	Standard	42 MM	8.4		**092652**	Short Shaft	42 MM	9.5	7.5625"	12 mm	37 mm	
092646	Standard	40 MM	8.6		**092653**	Short Shaft	40 MM	9.8		12 mm	35 mm	
092647	Standard	38 MM	8.8		**092654**	Short Shaft	38 MM	10.1		12 mm	33 mm	
092648	Standard	35 MM	9.0		**092655**	Short Shaft	35 MM	10.6		10 mm	30 mm	

(1) - Standard Shaft Bushing Kit includes two standard bushings, two back-up plates, snap rings, hardware and key
(2) - Short Shaft Bushing Kit includes one standard bushing, one long bushing with insertable wedge, two back-up plates with snap rings, hardware and key
(3) - Standard key provided for Short Shaft Kit. Key will overhang customer shaft within bore.
(4) - L dimension is the minimum required shaft length. Tolerance on customer shaft is nominal 0.0100" undersize on inch shaft, and nominal to 0.25mm undersize on metric shafts.
Note: The B5 Flange can not be used in combination with the tapered hollow bore output due to the flange interfering with the Twin-tapered bushings.
(–) - Bore Size not available

Twin-tapered bushings

RHB Size 108

Part number	RHB Size 108	Bore	Weight (lb)	L (4)	Part number	RHB Size 108	Bore	Weight (lb)	L (4)	Shaft keyseat W	Shaft keyseat S	KL (3)
092871	Standard (1)	2.6875"	9.4		–	–	–	–	–	0.625"	2.338"	
092872	Standard	2.5000"	10.6		–	–	–	–	–	0.625"	2.148"	
092873	Standard	2.4375"	10.8		**092883**	Short Shaft (2)	2.4375"	11.3		0.625"	2.084"	
092874	Standard	2.3750"	11.3		**092884**	Short Shaft	2.3750"	11.8		0.625"	2.021"	
092875	Standard	2.2500"	11.5		**092885**	Short Shaft	2.2500"	12.4		0.500"	1.893"	
092876	Standard	2.1875"	11.5		**092886**	Short Shaft	2.1875"	12.8		0.500"	1.909"	
092877	Standard	2.1250"	12.2		**092887**	Short Shaft	2.1250"	13.3	8.875'	0.500"	1.845"	
092878	Standard	2.0000"	12.6		**092888**	Short Shaft	2.0000"	13.9		0.500"	1.718"	
092879	Standard	1.9375"	13.0		**092889**	Short Shaft	1.9375"	14.3		0.500"	1.655"	
092880	Standard	1.8750"	13.2	11.6875"	**092890**	Short Shaft	1.8750"	14.6		0.500"	1.591"	12.625"
092881	Standard	1.7500"	13.3		**092891**	Short Shaft	1.7500"	15		0.375"	1.542"	
092882	Standard	1.6875"	13.5		**092892**	Short Shaft	1.6875"	15.3		0.375"	1.479"	
092893	Standard	70 MM	9.1		–	–	–	–	–	20 mm	62.5 mm	
092894	Standard	65 MM	10.0		**092649**	Short Shaft	65 MM	10.4		18 mm	58 mm	
092895	Standard	60 MM	11.2		**092650**	Short Shaft	60 MM	11.8		18 mm	53 mm	
092896	Standard	55 MM	12.0		**092651**	Short Shaft	55 MM	13.0	8.875"	16 mm	49 mm	
092897	Standard	50 MM	12.6		**092652**	Short Shaft	50 MM	14.0		14 mm	44.5 mm	
092898	Standard	45 MM	12.6		**092653**	Short Shaft	45 MM	15.1		14 mm	39.5 mm	
092899	Standard	42 MM	13.7		**092654**	Short Shaft	42 MM	15.6		12 mm	37 mm	

RHB Size 128

Part number	RHB Size 128	Bore	Weight (lb)	L (4)	Part number	RHB Size 128	Bore	Weight (lb)	L (4)	Shaft keyseat W	Shaft keyseat S	KL (3)
092834	Standard (1)	3.1875"	13.7		–	–	–	–	–	0.750"	2.768"	
092835	Standard	3.0000"	15.1		–	–	–	–	–	0.750"	2.577"	
092836	Standard	2.9375"	15.6		**092847**	Short Shaft (2)	2.9375"	16.2		0.750"	2.514"	
092837	Standard	2.8750"	16.1		**092848**	Short Shaft	2.8750"	16.9		0.750"	2.450"	
092838	Standard	2.6875"	16.7		**092849**	Short Shaft	2.6875"	18.1		0.625"	2.338"	
092839	Standard	2.5000"	17.9		**092850**	Short Shaft	2.5000"	19.7		0.625"	2.148"	
092840	Standard	2.4375"	18.1		**092851**	Short Shaft	2.4375"	20.1		0.625"	2.084"	
092841	Standard	2.3750"	18.3		**092852**	Short Shaft	2.3750"	20.5	11.375"	0.625"	2.021"	
092842	Standard	2.2500"	18.9		**092853**	Short Shaft	2.2500"	21.4		0.500"	1.893"	
092843	Standard	2.1875"	19.1		**092854**	Short Shaft	2.1875"	21.8		0.500"	1.909"	
092844	Standard	2.1250"	19.3	14.875"	**092855**	Short Shaft	2.1250"	22.2		0.500"	1.845"	15.625"
092845	Standard	2.0000"	19.9		**092856**	Short Shaft	2.0000"	23		0.500"	1.718"	
092846	Standard	1.9375"	20.1		**092857**	Short Shaft	1.9375"	23.4		0.500"	1.655"	
092858	Standard	80 MM	14.1		–	–	–	–	–	22 mm	71 mm	
092859	Standard	75 MM	15.3		**092865**	Short Shaft	75 MM	15.8		20 mm	67.5 mm	
092860	Standard	70 MM	16.3		**092866**	Short Shaft	70 MM	17.4		20 mm	62.5 mm	
092861	Standard	65 MM	17.5		**092867**	Short Shaft	65 MM	18.9	11.375"	18 mm	58 mm	
092862	Standard	60 MM	18.5		**092868**	Short Shaft	60 MM	21.7		18 mm	53 mm	
092863	Standard	55 MM	19.3		**092869**	Short Shaft	55 MM	22.0		16 mm	49 mm	
092864	Standard	50 MM	19.9		092870	Short Shaft	50 MM	23.1		14 mm	44.5 mm	

(1) - Standard Shaft Bushing Kit includes two standard bushings, two back-up plates, snap rings, hardware and key
(2) - Short Shaft Bushing Kit includes one standard bushing, one long bushing with insertable wedge, two back-up plates with snap rings, hardware and key
(3) - Standard key provided for Short Shaft Kit. Key will overhang customer shaft within bore.
(4) - L dimension is the minium required shaft length. Tolerance on customer shaft is nominal 0.0100" undersize on inch shaft, and nominal to 0.25 mm undersize on metric shaft.
Note: The B5 Flange can not be used in combination with the tapered hollow bore output due to the flange interfering with the Twin-tapered bushings.
(–) - Bore Size not available.

Twin-tapered bushings

RHB Size 148

Part number	RHB Size 148	Bore	Weight (lb)	L (4)	Part number	RHB Size 148	Bore	Weight (lb)	L (4)	Shaft keyseat W	Shaft keyseat S	KL (3)
093033	Standard (1)	3.4375"	16.1	16.75"	**093044**	Short Shaft (2)	3.4375"	16.5	13.1875"	0.875"	2.943"	17.6875"
093034	Standard	3.1875"	17.7		**093045**	Short Shaft	3.1875"	19.0		0.750"	2.768"'	
093035	Standard	3.0000"	19.1		**093046**	Short Shaft	3.0000"	20.9		0.750"	2.577"	
093036	Standard	2.9375"	19.6		**093047**	Short Shaft	2.9375"	21.6		0.750"	2.514"	
093037	Standard	2.8750"	20.1		**093048**	Short Shaft	2.8750"	22.3		0.750"	2.450"	
093038	Standard	2.6875"	20.9		**093049**	Short Shaft	2.6875"	23.7		0.625"	2.338"	
093039	Standard	2.5000"	22.1		**093050**	Short Shaft	2.5000"	25.3		0.625"	2.148"	
093040	Standard	2.4375"	22.3		**093051**	Short Shaft	2.4375"	25.8		0.625"	2.084"	
093041	Standard	2.3750"	22.7		**093052**	Short Shaft	2.3750"	26.3		0.625"	2.021"	
093042	Standard	2.2500"	23.1		**093053**	Short Shaft	2.2500"	26.7		0.500"	1.893"	
093043	Standard	2.1875"	23.3		**093054**	Short Shaft	2.1875"	27.5		0.500"	1.909"	
093055	Standard	90 MM	14.9		–	–	–	–	–	25 mm	81 mm	
093056	Standard	85 MM	16.4		**093062**	Short Shaft	85 MM	17.1	13.1875"	22 mm	76 mm	
093057	Standard	80 MM	18.1		**093063**	Short Shaft	80 MM	19.4		22 mm	71 mm	
093058	Standard	75 MM	19.3		**093064**	Short Shaft	75 MM	21.2		20 mm	71 mm	
093059	Standard	70 MM	20.4		**093065**	Short Shaft	70 MM	23		20 mm	62.5 mm	
093060	Standard	65 MM	21.4		**093066**	Short Shaft	65 MM	24		18 mm	58 mm	
093061	Standard	60 MM	22.6		**093067**	Short Shaft	60 MM	26.3		18 mm	53 mm	

RHB Size 168

Part number	RHB Size 168	Bore	Weight (lb)	L (4)	Part number	RHB Size 168	Bore	Weight (lb)	L (4)	Shaft keyseat W	Shaft keyseat S	KL (3)
093068	Standard (1)	4.4375"	20.5	19.6875"	–	–	–	–	–	1.000"	3.880"	20.5625"
093069	Standard	4.1875"	23.5		–	–	–	–	–	1.000"	3.627"	
093070	Standard	3.9375"	26.3		**093079**	Short Shaft (2)	3.9375"	26.7	16.00"	1.000"	3.373"	
093071	Standard	3.4375"	30.9		**093080**	Short Shaft	3.4375"	34.2		0.875"	2.943"	
093072	Standard	3.1875"	32.6		**093081**	Short Shaft	3.1875"	36.7		0.750"	2.768"	
093073	Standard	3.0000"	34.0		**093082**	Short Shaft	3.0000"	38.8		0.750"	2.577"	
093074	Standard	2.9375"	34.6		**093083**	Short Shaft	2.9375"	39.6		0.750"	2.514"	
093075	Standard	2.8750"	35.0		**093084**	Short Shaft	2.8750"	40.2		0.750"	2.450"	
093076	Standard	2.6875"	35.8		**093085**	Short Shaft	2.6875"	41.7		0.625"	2.338"	
093077	Standard	2.5000"	37.2		**093086**	Short Shaft	2.5000"	43.6		0.625:	2.148"	
093078	Standard	2.4375"	37.4		**093087**	Short Shaft	2.4375"	44.1		0.625"	2.084"	
093088	Standard	110 MM	21.4		–	–	–	–	–	28 mm	100 mm	
093089	Standard	100 MM	25.9		**093097**	Short Shaft	100 MM	27.1	16.00"	28 mm	90 mm	
093090	Standard	95 MM	27.8		**093098**	Short Shaft	95 MM	29.8		25 mm	86 mm	
093091	Standard	90 MM	29.7		**093099**	Short Shaft	90 MM	32.5		25 mm	81 mm	
093092	Standard	85 MM	31.1		**093100**	Short Shaft	85 MM	24.6		22 mm	76 mm	
093093	Standard	80 MM	32.7		**093101**	Short Shaft	80 MM	37.0		22 mm	71 mm	
093094	Standard	75 MM	33.9		**093102**	Short Shaft	75 MM	39.0		20 mm	71 mm	
093095	Standard	70 MM	35.3		**093103**	Short Shaft	70 MM	41.1		20 mm	62.5 mm	
09096	Standard	65 MM	36.5		**093104**	Short Shaft	65 MM	42.8		18 mm	58 mm	

(1) - Standard Shaft Bushing Kit includes two standard bushings, two back-up plates, snap rings, hardware and key
(2) - Short Shaft Bushing Kit includes one standard bushing, one long bushing with insertable wedge, two back-up plates with snap rings, hardware and key
(3) - Standard key provided for Short Shaft Kit. Key will overhang customer shaft within bore.
(4) - L dimension is the minimum required shaft length. Tolerance on customer shaft is nominal 0.0100" undersize on inch shaft, and nominal to 0.25mm undersize on metric shafts.
Note: The B5 Flange can not be used in combination with the tapered hollow bore output due to the flange interfering with the Twin-tapered bushings.
(–) - Bore Size not available

Screw-conveyor adapter

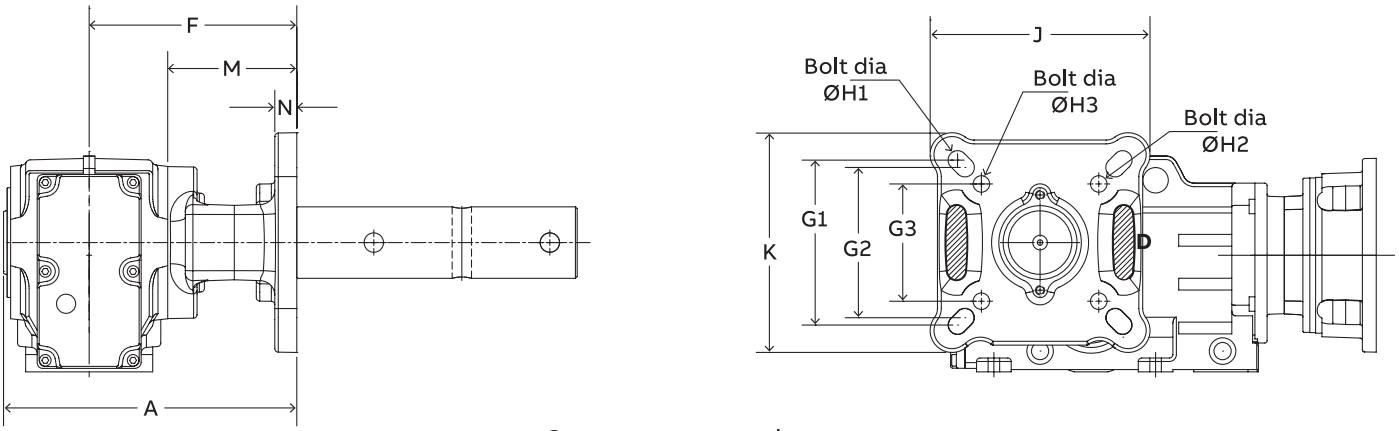

Screw conveyor adapter

CEMA screw conveyor adapters

	Standard adapter assembly Part number	Weight	**Severe duty package** Part number	**Weight**	**A**	**F**	**M**	**N**	**J**	**K**	**G1**	**ØH1**	**G2**	**ØH2**	**G3**	**ØH3**	*** Thrust load (lb.)**
38	091698	14	091699	1.0	8.92	6.46	4.33	0.50	7.50	7.50	5.63	5/8	5.13	5/8	4.00	1/2	867
48	091700	14.7	091701	1.5	10.03	7.08	4.40	0.75	7.50	7.50	5.63	5/8	5.13	5/8	4.00	1/2	2267
58	091702	17.7	091703	1.5	10.68	6.33	4.42	0.75	8.50	8.20	6.00	3/4	5.13	5/8	4.00	1/2	3067
68	091702	17.7	091703	1.5	17.70	7.67	4.42	0.75	8.50	8.20	6.00	3/4	5.13	5/8	4.00	1/2	3067
88	091704	17.7	091705	2.3	13.67	9.54	5.74	0.75	9.60	8.75	6.00	3/4	5.13	5/8	-	-	4000
108	091706	45.5	091707	2.1	14.91	10.13	5.76	0.75	12.06	9.75	6.75	7/8	6.00	3/4	5.13	5/8	4667
128	091708	75.23	091709	3.1	18.27	12.31	6.76	0.75	14.30	12.13	6.75	7/8	6.00	3/4	5.13	5/8	6000

Notes: Screw Conveyor option is for use with the standard inch straight hollow bore shaft.
Refer to gear case dimension pages for dimensions and input options.
Severe Duty option includes packing retainer, stud nut and a braided felt seal.
*Max Thrust load at the output bearing

Screw-conveyor drive dimensions

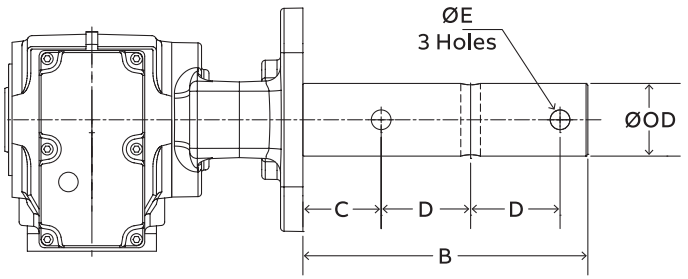

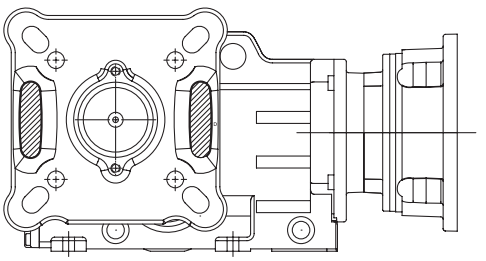

Screw conveyor drive shaft

CEMA screw conveyor drive

	Drive shaft	Screw diameter	Part number	Ø OD	B	C	D	Ø E	Weight
38	1-1/2 Standard	6"-9"	**091583**	1.50	9.00	2.13	3.00	0.53	8.0
	2 Standard	9"-12"	**095303**	2.00	9.00	2.13	3.00	0.66	11.0
	2-7/16 Standard	12"-14"	**095304**	2.4375	9.69	2.75	3.00	0.66	15.8
48	1-1/2 Standard	6"-9"	**091585**	1.50	9.00	2.13	3.00	0.53	9.4
	2 Standard	9"-12"	**091587**	2.00	9.00	2.13	3.00	0.66	12.8
	2-7/16 Standard	12"-14"	**095305**	2.4375	9.69	2.75	3.00	0.66	17.1
58	1-1/2 Standard	6"-9"	**083187**	1.50	9.00	2.13	3.00	0.53	9.4
	2 Standard	9"-12"	**083138**	2.00	9.00	2.13	3.00	0.66	12.8
68	1-1/2 Standard	6"-9"	**091589**	1.50	9.00	2.13	3.00	0.53	10.5
	2 Standard	9"-12"	**091591**	2.00	9.00	2.13	3.00	0.66	13.8
	2-7/16 Standard	12"-14"	**091593**	2.4375	9.69	2.75	3.00	0.66	18.6
	3 Standard	12"-20"	**095306**	3.00	9.87	2.87	3.00	0.78	24.5
88	2 Standard	9"-12"	**091597**	2.00	9.00	2.13	3.00	0.66	22.3
	2-7/16 Standard	12"-14"	**091599**	2.4375	9.69	2.75	3.00	0.66	27.1
	3 Standard	12"-20"	**091601**	3.00	9.87	2.87	3.00	0.78	33.7
108	2 Standard	9"-12"	**091603**	2.00	9.00	2.13	3.00	0.66	27.2
	2-7/16 Standard	12"-14"	**091605**	2.4375	9.69	2.75	3.00	0.66	32.1
	3 Standard	12"-20"	**091607**	3.00	9.87	2.87	3.00	0.78	38.8
	3-7/16 Standard	18"-20"	**095308**	3.4375	13.13	3.87	4.00	0.91	52.0
128	2 Standard	9"-12"	**091609**	2.00	9.00	2.13	3.00	0.66	43.4
	2-7/16 Standard	12"-14"	**091611**	2.4375	9.69	2.75	3.00	0.66	48.2
	3 Standard	12"-20"	**091613**	3.00	9.87	2.87	3.00	0.78	54.9
	3-7/16 Standard	18"-20"	**091615**	3.4375	13.13	3.87	4.00	0.91	69.4

Note: Screw Conveyor option is for use with the standard inch straight hollow bore shaft. Refer to gear case dimension pages for dimensions and input options.

Shrink disk – foot mounted – metric

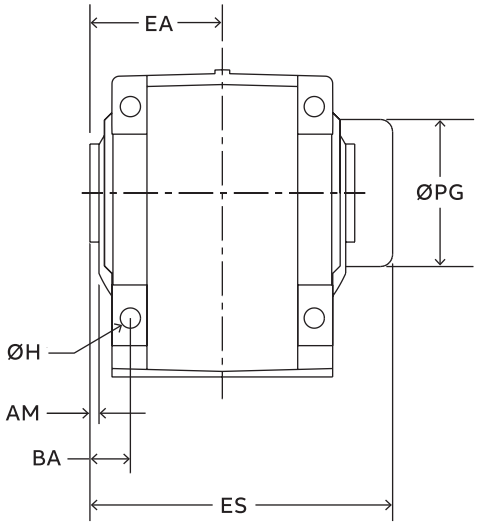

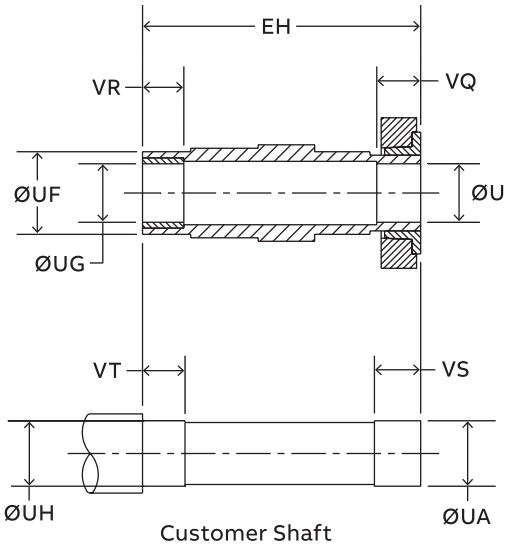

Dimension - Inch/MM

Unit size	AM	BA	ES	ØH	ØPG	EH	ØU	tol.	ØUA	tol.	ØUF	ØUG	tol.	ØUH	tol.	VQ	VR	VS	VT
BB38	0.24 6	0.39 10	6.06 154	0.43 11	3.03 77	5.75 146	– 30	– +0.021 -0.000	– 30	– +0.000 -0.013	1.77 45	– 30	-- +0.021 -0.000	– 30	– +0.000 -0.013	0.87 22	0.79 20	1.06 27	0.98 25
BB48	0.28 7	0.59 15	7.24 184	0.43 11	3.66 93	6.97 177	– 40	– +0.025 0.000	– 40	– +0.000 -0.016	2.17 55	– 40	– +0.025 -0.000	– 40	– +0.000 -0.016	0.98 25	0.79 20	1.18 30	0.98 25
BB68	0.30 7.5	0.79 20	8.5 216	0.53 13.5	4.41 112	8.23 209	– 50	– +0.025 -0.000	– 50	– +0.000 -0.016	2.56 65	– 50	– +0.025 -0.000	– 50	– +0.000 -0.016	1.06 27	0.79 20	1.26 32	0.98 25
BB88	0.33 8.5	0.89 22.5	9.8 249	0.71 18	5.2 132	9.49 241	– 60	– +0.030 -0.000	– 60	– +0.000 -0.019	3.15 80	– 60	– +0.030 -0.000	– 60	– +0.000 -0.019	114 29	1.18 30	1.34 34	1.38 35
BB108	0.35 9	1.18 30	11.34 288	0.94 24	5.67 144	11.02 280	– 70	– +0.030 -0.000	– 70	– +0.000 -0.019	3.74 95	– 70	– +0.030 -0.000	– 70	– +0.000 -0.019	1.18 30	1.57 40	1.38 35	1.77 45
BB128	0.35 9	1.18 30	14.06 357	1.02 26	7.09 180	13.58 345	– 80	– +0.030 -0.000	– 80	– +0.000 -0.019	4.33 110	– 80	– +0.030 -0.000	– 80	– +0.000 -0.019	1.57 40	1.97 50	1.77 45	2.17 55
BB148	0.43 11	1.57 40	16.46 418	1.3 33	8.27 210	15.91 404	– 95	– +0.035 -0.000	– 95	– +0.000 -0.022	4.72 120	– 95	– +0.035 -0.000	– 95	– +0.000 -0.022	1.93 49	2.36 60	2.13 54	2.56 65
BB168	0.43 11	1.57 40	19.53 496	1.54 39	9.33 237	19.02 483	– 105	– +0.035 -0.000	– 105	– +0.000 -0.022	5.91 150	– 105	– +0.035 -0.000	– 105	– +0.000 -0.022	2.13 54	2.76 70	2.32 59	2.95 75

Note: See Eng-15 for installation instructions

Shrink disk – flange mounted – shaft mounted – metric

B5 Output flange

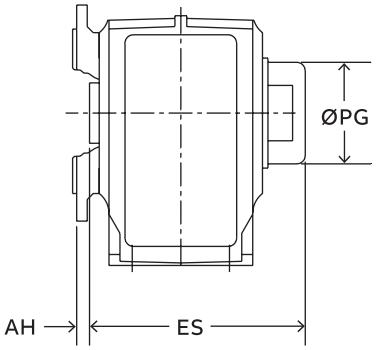

B14 Output flange

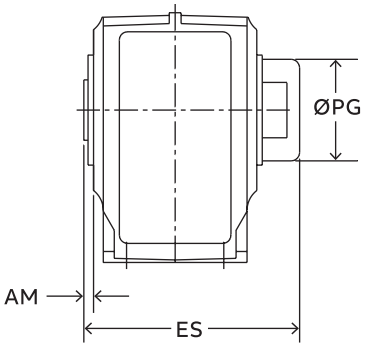

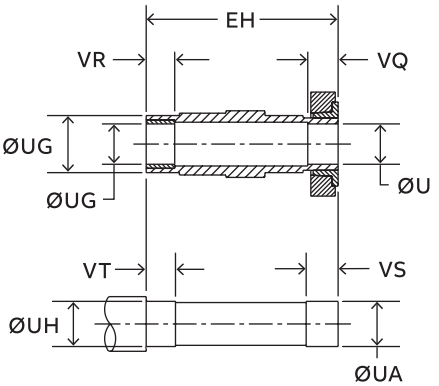

Dimension - Inch/MM

Unit size	AM	AH	ES	ØPG	EH	ØU	tol.	ØUA	tol.	ØUF	ØUG	tol.	ØUH	tol.	VQ	VR	VS	VT
BF38	0.24 6	0.94 24	6.06 154	3.03 77	5.75 146	– 30	– +0.021 -0.000	– 30	– +0.000 -0.013	1.77 45	– 30	– +0.021 -0.000	– 30	– +0.000 -0.013	0.87 22	0.79 20	1.06 27	0.98 25
BF48	0.28 7	0.98 25	7.24 184	3.66 93	6.97 177	– 40	– +0.025 -0.000	– 40	– +0.000 -0.016	2.17 55	– 40	– +0.025 -0.000	– 40	– +0.000 -0.016	0.98 25	0.79 20	1.18 30	0.98 25
BF68	0.30 7.5	0.91 23	8.50 216	4.41 112	8.23 209	– 50	– +0.025 -0.000	– 50	– +0.000 -0.016	2.56 65	– 50	– +0.025 -0.000	– 50	– +0.000 -0.016	1.06 27	0.79 20	1.26 32	0.98 25
BF88	0.33 8.5	1.46 37	9.80 249	5.2 132	9.49 241	– 60	– +0.030 -0.000	– 60	– +0.000 -0.019	3.15 80	– 60	– +0.030 -0.000	– 60	– +0.000 -0.019	1.14 29	1.18 30	1.34 34	1.38 35
BF108	0.35 9	1.42 36	11.34 288	5.67 144	11.02 280	– 70	– +0.030 -0.000	– 70	– +0.000 -0.019	3.74 95	– 70	– +0.030 -0.000	– 70	– +0.000 -0.019	1.18 30	1.57 40	1.38 35	1.77 45
BF128	0.35 9	1.65 42	14.06 357	7.09 180	13.58 345	– 80	– +0.030 -0.000	– 80	– +0.000 -0.019	4.33 110	– 80	– +0.030 -0.000	– 80	– +0.000 -0.019	1.57 40	1.97 50	1.77 45	2.17 55
BF148	0.43 11	1.61 41	16.46 418	8.27 210	15.91 404	– 95	– +0.035 -0.000	– 95	– +0.000 -0.022	4.72 120	– 95	– +0.035 -0.000	– 95	– +0.000 -0.022	1.93 49	2.36 60	2.13 54	2.56 65
BF168	0.43 11	2.01 51	19.53 496	9.33 237	19.02 483	– 105	– +0.035 -0.000	– 105	– +0.000 -0.022	5.91 150	– 105	– +0.035 -0.000	– 105	– +0.000 -0.022	2.13 54	2.76 70	2.32 59	2.95 75

Note: See Eng-15 for installation instructions

Q-Loc bushing

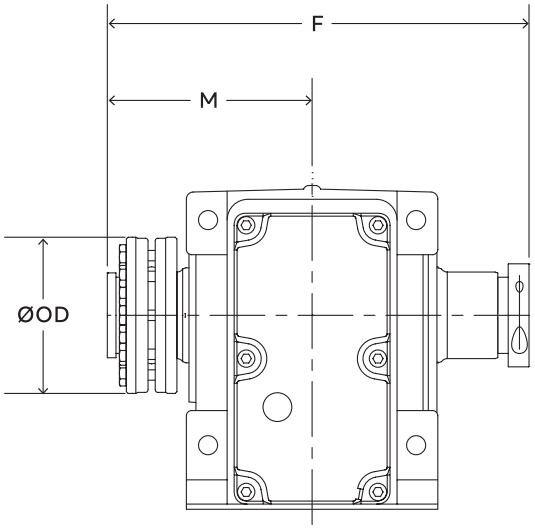

RHB Footed housing

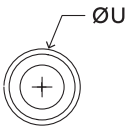

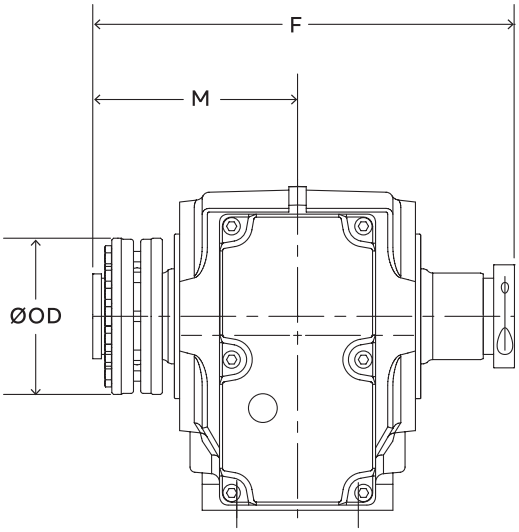

RHB Flange housing

	Keyless bushings					
	Ø U	Minimum shaft diameter allowed	Bushing part number	F	M	Ø OD
38	1.000	0.995	**095383**	8.2	4.0	2.9
	1.000	0.995	**095398**			
	1.125	1.120	**095399**			
48	1.250	1.244	**095400**	9.6	4.7	3.6
	1.375	1.369	**095401**			
	1.4375	1.431	**095402**			
	1.1875	1.183	**084546**			
	1.250	1.244	**084549**			
58	1.375	1.369	**084557**	10.272	5.0	3.9
	1.4375	1.431	**084635**			
	1.500	1.494	**084638**			
	1.250	1.244	**095428**			
	1.375	1.369	**095429**			
68	1.4375	1.431	**095430**	11.1	5.4	4.4
	1.625	1.619	**095431**			
	1.6875	1.681	**095432**			
	1.4375	1.432	**095473**			
	1.6250	1.619	**095474**			
88	1.6875	1.681	**095475**	12.2	6.0	5.5
	1.9375	1.931	**095476**			
	2.0000	1.993	**095477**			
	1.9375	1.931	**095503**			
	2.0000	1.993	**095504**			
108	2.1875	2.180	**095505**	13.5	6.6	5.8
	2.4375	2.430	**095506**			

Note: F dimension is the minimum shaft length required.
Q-Loc bushing systems are limited to the maximum torque rating of the gear reducer.

Stainless steel – C-face – solid shaft

BU383CN_
BU483CN_

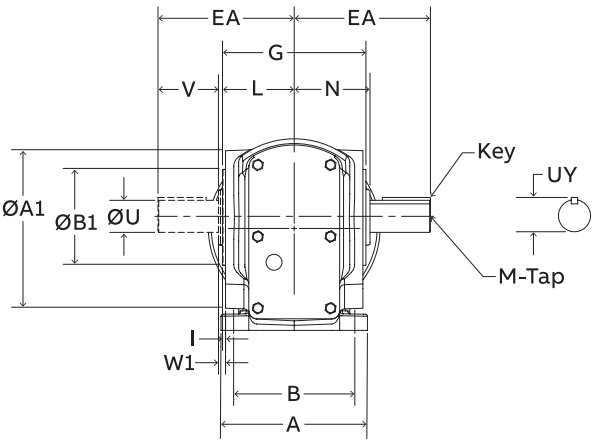

B14 Output flange

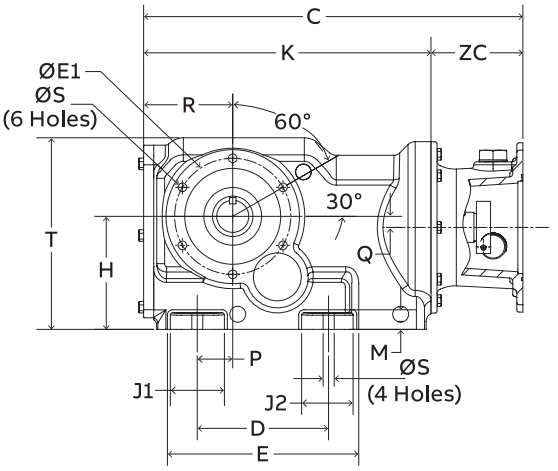

B14 Output flange

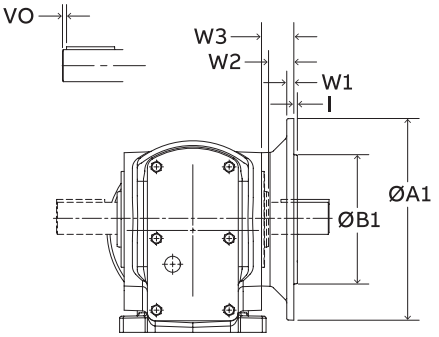

B5 Output flange

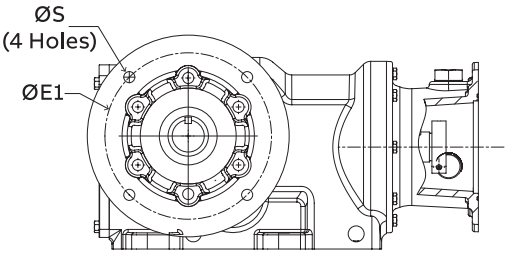

B5 Output flange

	Standard inch output shaft							Standard metric output shaft							
	Ø U	Tol.	UY	V	EA	Key	M-Tap	Ø U	Tol.	UY	V	VO	EA	Key	M-Tap
38	1.000	+0.0000 -0.0005	1.11	1.97	4.33	1/4 x 1/4 x 1-5/8	3/8-16 UNC X 0.87	25	+0.015 +0.002	28	50	5	110	8 x 7 x 40	M10 x 22
48	1.250	+0.0000 -0.0005	1.37	2.36	5.31	1/4 x 1/4 x 1-7/8	3/8-16 UNC X 0.87	30	+0.015 +0.002	33	60	4	135	8 x 7 x 50	M10 x 22

Gearcase dimensions

	Mounting dimensions							Outline dimensions												
	B	D	H	X	VP	Ø OD	Ø S	A	E	K	G	L	M	N	P	Q	R	T	J1	J2
38	3.94	4.33	3.94	4.72	4.02	1.77	0.43	4.72	6.14	9.78	4.49	2.24	0.63	2.36	1.10	0.38	2.93	6.61	2.01	1.87
48	4.72	5.12	4.41	5.91	5.04	2.17	0.43	5.71	7.12	11.20	5.59	2.80	0.76	2.95	1.38	0.43	3.47	7.47	2.11	2.01

Gearcase dimensions

	B14 mounting dimensions						B5 mounting dimensions							
	Ø A1	Ø B1	Ø E1	Ø S2	I	W1	Ø A1	Ø B1	Ø E1	Ø S2	I	W1	W2	W3
38	4.72	3.1497	3.94	M8 X 0.55	0.12	0.24	6.30	4.3308	5.12	0.35	0.14	0.39	0.95	1.18
48	5.20	3.7402	4.53	M10 X 0.66	0.12	0.29	7.87	3.7402	6.50	0.43	0.14	0.47	0.97	1.26

NEMA clamp collar motor dimensions

Reducer size	Reducer stage	56C/140TC		180TC	
		C	ZC	C	ZC
38	3	12.78	3.00	14.72	4.94
48	3	14.20	3.00	16.14	4.94

Stainless steel – C-face – straight hollow bore

BU383CN_
BU483CN_

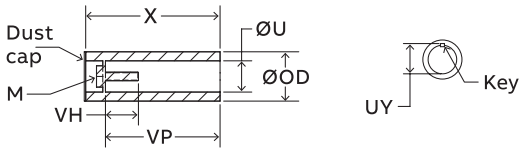

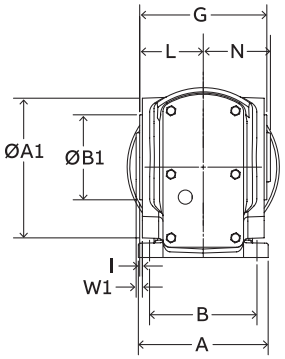

B14 Output flange

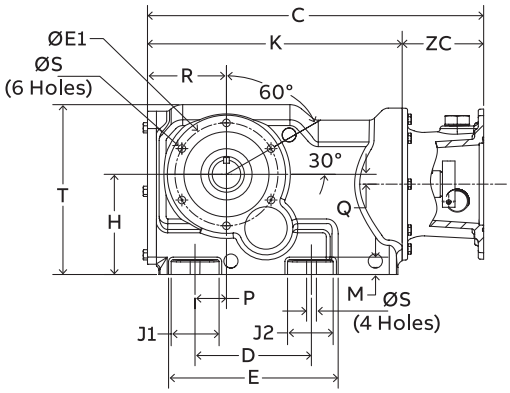

B14 Output flange

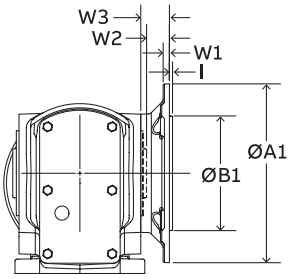

B5 Output flange

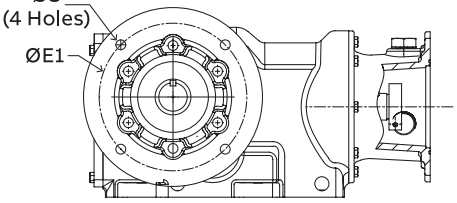

B5 Output flange

	Standard inch output shaft						Standard metric output shaft					
	Ø U	Tol.	UY	V	Key	M-Tap	Ø U	Tol.	UY	VH	Key	M-Tap
38	1.250	+0.0010 +0.0004	1.38	1.47	1/4 X 1/4 X 1-7/8	3/8-16 X 1-3/4 UNC	30	+0.020 +0.007	33	31	8 X 7 X 40	M10 X 40
48	1.375	+0.0010 +0.0004	1.53	1.45	5/16 X 5/16 X 2-3/16	3/8-16 X 1-3/4 UNC	35	+0.025 +0.009	38	43	10 X 8 X 45	M10 X 50

Gearcase dimensions

	Mounting dimensions							Outline dimensions												
	B	D	H	X	VP	Ø OD	Ø S	A	E	K	G	L	M	N	P	Q	R	T	J1	J2
38	3.94	4.33	3.94	4.72	4.02	1.77	0.43	4.72	6.14	9.78	4.49	2.24	0.63	2.36	1.10	0.38	2.93	6.61	2.01	1.87
48	4.72	5.12	4.41	5.91	5.04	2.17	0.43	5.71	7.12	11.20	5.59	2.80	0.76	2.95	1.38	0.43	3.47	7.47	2.11	2.01

Gearcase dimensions

	B14 mounting dimensions						B5 mounting dimensions							
	Ø A1	Ø B1	Ø E1	Ø S2	I	W1	Ø A1	Ø B1	Ø E1	Ø S2	I	W1	W2	W3
38	4.72	3.1497	3.94	M8 X 0.55	0.12	0.24	6.30	4.3308	5.12	0.35	0.14	0.39	0.95	1.18
48	5.20	3.7402	4.53	M10 X 0.66	0.12	0.29	7.87	3.7402	6.50	0.43	0.14	0.47	0.97	1.26

NEMA clamp collar motor dimensions

Reducer Size	Reducer Stage	56C/140TC		180TC	
		C	ZC	C	ZC
38	3	12.78	3.00	14.72	4.94
48	3	14.20	3.00	16.14	4.94

Stainless steel – C-face – Q-loc bushing

BU383CN_
BU483CN_

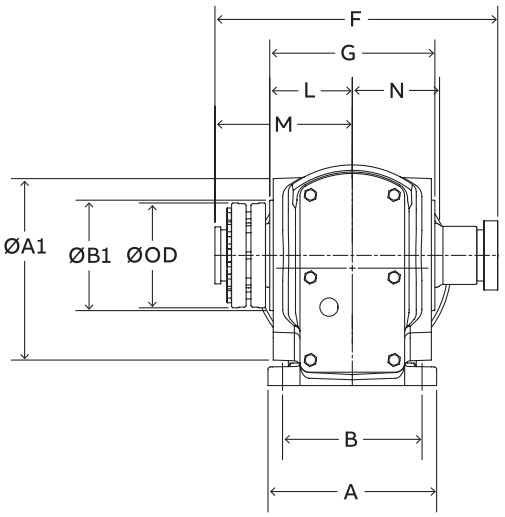

B14 Output flange

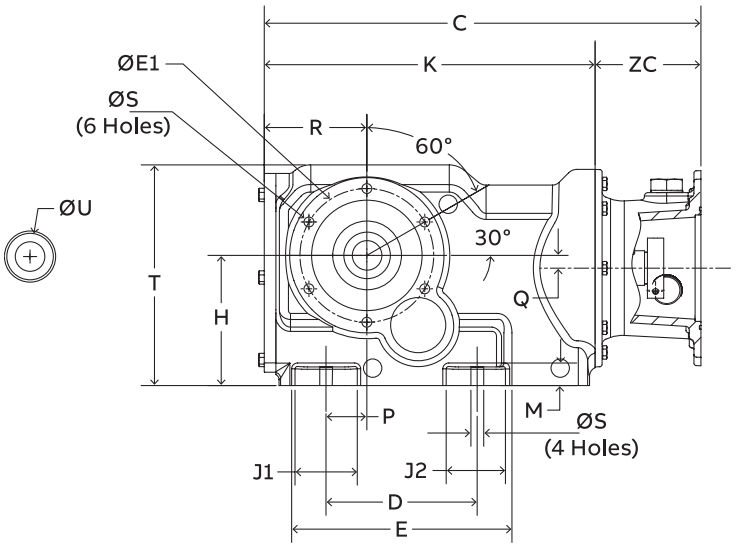

B14 Output flange

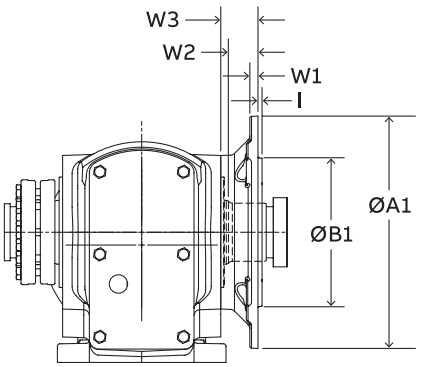

B5 Output flange

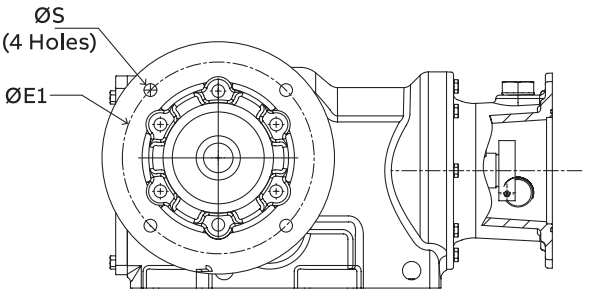

B5 Output flange

Keyless bushings

	Ø U	Min shaft dia. allowed	Part number
38	1.000	0.995	**096390**
48	1.000	0.995	**096393**
	1.125	1.120	**096394**
	1.250	1.244	**096395**
	1.375	1.369	**096396**
	1.4375	1.431	**096397**

NEMA clamp collar motor dimensions

Reducer Size	56C/140TC		180TC	
	C	ZC	C	ZC
38	12.78	3.00	14.72	4.94
48	14.20	3.00	16.14	4.94

Gearcase dimensions

	Mounting dimensions							Outline dimensions												
	B	D	H	F	M	Ø OD	Ø S	A	E	K	G	L	M	N	P	Q	R	T	J1	J2
38	3.94	4.33	3.94	8.2	4.0	2.9	0.43	4.72	6.14	9.78	4.49	2.24	0.63	2.36	1.10	0.38	2.93	6.61	2.01	1.87
48	4.72	5.12	4.41	9.6	4.7	3.6	0.43	5.71	7.12	11.20	5.59	2.80	0.76	2.95	1.38	0.43	3.47	7.47	2.11	2.01

Gearcase dimensions

	B14 mounting dimensions						B5 mounting dimensions							
	Ø A1	Ø B1	Ø E1	Ø S2	I	W1	Ø A1	Ø B1	Ø E1	Ø S2	I	W1	W2	W3
38	4.72	3.1497	3.94	M8 X 0.55	0.12	0.24	6.30	4.3308	5.12	0.35	0.14	0.39	0.95	1.18
48	5.20	3.7402	4.53	M10 X 0.66	0.12	0.29	7.87	3.7402	6.50	0.43	0.14	0.47	0.97	1.26

Thermal Ratings

Thermal ratings – RHB 38

The Thermal Hp ratings shown in the table below are based on an ambient temperature of 68° F, continuous operation and fan cooled motors as well as with the standard ISO220 factory filled lubricant. For ratings at other ambient temperatures, please consult Thermal Factors table below. If using with different lubricants, please contact Application Engineering. Darker shaded areas indicate that the unit is thermally limited.

Ratio	1750 RPM							3450 RPM						
	Output speed	Rated power	Mounting position					Output speed	Rated power	Mounting position				
			A1	A2	A3	A4	A5 A6			A1	A2	A3	A4*	A5 A6
	RPM	Hp	Hp	Hp	Hp	Hp	Hp	RPM	Hp	Hp	Hp	Hp	Hp	Hp
5.65	**309.6**	**5.60**	11	11	11	11	11	**610.3**	**6.99**	8	8	8	7	7
6.22	**281.4**	**5.26**	11	11	11	11	11	**554.8**	**6.57**	8	8	8	8	8
7.22	**242.3**	**4.76**	11	11	11	11	11	**477.7**	**5.95**	8	8	8	8	8
7.82	**223.8**	**4.51**	11	11	11	11	11	**441.2**	**5.65**	8	8	8	8	8
8.85	**197.8**	**4.15**	10	10	10	10	10	**390.0**	**5.21**	8	8	8	8	8
9.72	180.0	3.90	9	9	9	9	9	**354.9**	**4.89**	8	8	8	8	8
10.72	**163.2**	**3.64**	9	9	9	9	9	**321.8**	**4.58**	8	8	8	8	8
11.50	**152.2**	**5.34**	9	9	9	9	9	**300.0**	**6.99**	7	6	7	6	6
12.65	**138.3**	**4.86**	8	8	8	8	8	**272.7**	**6.57**	7	6	7	6	6
14.69	**119.1**	**4.18**	8	8	8	8	8	**234.8**	**5.95**	7	7	7	7	7
15.91	**110.0**	**3.86**	8	8	8	8	8	**216.8**	**5.65**	7	7	7	7	7
17.99	**97.3**	**3.41**	8	8	8	8	8	**191.7**	**5.21**	7	7	7	7	7
19.78	**88.5**	**3.11**	7	7	7	7	7	**174.5**	**4.89**	7	7	7	7	7
21.81	**80.2**	**2.82**	7	7	7	7	7	**158.2**	**4.58**	6	6	6	6	6
24.16	72.4	2.54	7	7	7	7	7	**142.8**	**4.27**	6	6	6	6	6
26.90	**65.1**	**2.28**	7	7	7	7	7	**128.2**	**3.97**	6	6	6	6	6
28.72	60.9	**2.14**	6	6	6	6	6	**120.1**	**4.07**	5	5	5	5	5
31.59	**55.4**	**1.94**	5	5	5	5	5	**109.2**	**3.80**	5	5	5	5	5
36.69	**47.7**	**1.67**	5	5	5	5	5	**94.0**	**3.30**	5	5	5	5	5
39.73	**44.0**	**1.55**	5	5	5	5	5	**86.8**	**3.05**	5	5	5	5	5
44.94	**38.9**	**1.37**	5	5	5	5	5	**76.8**	**2.70**	4.8	4.8	4.8	4.8	4.8
49.38	**35.4**	**1.24**	5	5	5	5	5	**69.9**	**2.45**	4.7	4.7	4.7	4.7	4.7
54.47	**32.1**	**1.13**	4.9	4.9	4.9	4.9	4.9	**63.3**	**2.22**	4.9	4.9	4.9	4.9	4.9
60.33	**29.0**	**1.02**	4.8	4.8	4.8	4.8	4.8	**57.2**	**2.01**	4.8	4.8	4.8	4.8	4.8
67.18	**26.1**	**0.91**	4.7	4.7	4.7	4.7	4.7	**51.4**	**1.80**	4.7	4.7	4.7	4.7	4.7
77.09	**22.7**	**0.80**	4.5	4.5	4.5	4.5	4.5	**44.8**	**1.57**	4.5	4.5	4.5	4.5	4.5
85.33	**20.5**	**0.72**	4.4	4.4	4.4	4.4	4.4	**40.4**	**1.42**	4.4	4.4	4.4	4.4	4.4
97.05	**18.0**	**0.63**	4.2	4.2	4.2	4.2	4.2	**35.5**	**1.25**	4.3	4.3	4.3	4.3	4.3
110.75	**15.8**	**0.55**	4	4	4	4	4	**31.2**	**1.09**	4.1	4.1	4.1	4.1	4.1
124.78	**14.0**	**0.49**	3.8	3.8	3.8	3.8	3.8	**27.6**	**0.97**	3.8	3.8	3.8	3.8	3.8
139.43	**12.6**	**0.44**	3.6	3.6	3.6	3.6	3.6	**24.7**	**0.87**	3.6	3.6	3.6	3.6	3.6
159.04	**11.0**	**0.39**	3.3	3.3	3.3	3.3	3.3	**21.7**	**0.76**	3.3	3.3	3.3	3.3	3.3
179.13	9.8	**0.34**	3	3	3	3	3	**19.3**	**0.68**	3.1	3.1	3.1	3.1	3.1

RHB thermal factors

Ambient temp (Deg. F)	Thermal factor
0	1.83
20	1.59
40	1.27
60	1.11
68	1.00
80	0.87
100	0.65
120	0.43

Rated power as shown on the table above is for the largest available motor frame for a unit size and ratio. When using the factors in the table, compare result with the actual ratio and motor frame used.

Example: RHB 38, 14.69:1, 1750 RPM input speed, 140TC motor frame at 120 degree F ambient, A5 mounting position:

According to the table above, this unit is capable of 8 Hp Thermally at 68 degree F. To convert this to the capability at 120 degrees F, multiply the rating by the factor in the Thermal Factors table (0.43). Actual Thermal Rating is 8*0.43 = 3.44 Hp. The mechanical rating for the RHB 38, 14.69, 140TC frame is 4.18 Hp. This unit is now thermally limited to 3.44 Hp.

Thermal ratings – RHB 48

The Thermal Hp ratings shown in the table below are based on an ambient temperature of 68° F, continuous operation and fan cooled motors as well as with the standard ISO220 factory filled lubricant. For ratings at other ambient temperatures, please consult Thermal Factors table below. If using with different lubricants, please contact Application Engineering. Darker shaded areas indicate that the unit is thermally limited.

Ratio	1750 RPM							3450 RPM						
	Output speed	Rated power	Mounting position					Output speed	Rated power	Mounting position				
			A1	A2	A3	A4	A5 A6			A1	A2	A3	A4*	A5 A6
	RPM	Hp	Hp	Hp	Hp	Hp	Hp	RPM	Hp	Hp	Hp	Hp	Hp	Hp
7.22	**242.3**	**9.90**	16	16	16	16	16	**477.7**	**12.95**	11	11	11	11	11
8.40	**208.4**	**8.51**	16	16	16	16	16	**410.8**	**11.71**	12	12	12	12	12
9.32	**187.8**	**7.67**	15	15	15	15	15	**370.2**	**10.92**	12	12	12	12	12
10.15	**172.4**	**7.04**	14	14	14	14	14	**340.0**	**10.31**	12	12	12	12	12
11.95	**146.4**	**8.70**	13	13	13	13	13	**288.6**	**12.95**	10	9	10	9	9
13.90	125.9	7.83	13	13	13	13	13	**248.2**	**11.71**	10	10	10	10	10
15.42	**113.5**	**7.17**	12	12	12	12	12	**223.7**	**10.92**	10	10	10	10	10
16.79	**104.2**	**6.59**	12	12	12	12	12	**205.4**	**10.31**	10	10	10	10	10
18.78	**93.2**	**5.89**	11	11	11	11	11	**183.7**	**9.56**	10	10	10	10	10
20.54	**85.2**	**5.39**	11	11	11	11	11	**168.0**	**9.00**	10	9	10	10	10
22.54	**77.6**	**4.91**	10	10	10	10	10	**153.1**	**8.45**	9	9	9	9	9
24.85	**70.4**	**4.45**	10	10	10	10	10	**138.8**	**7.91**	9	9	9	9	9
27.55	**63.5**	**4.02**	9	9	9	9	9	**125.2**	**7.37**	9	9	9	9	9
28.90	**60.6**	**3.83**	9	9	9	9	9	**119.4**	**6.70**	7	7	7	7	7
33.60	52.1	**3.29**	9	9	9	9	9	**102.7**	**6.02**	7	7	7	7	7
37.28	**46.9**	**2.97**	8	8	8	8	8	**92.5**	**5.60**	7	7	7	7	7
40.60	43.1	**2.73**	8	8	8	8	8	**85.0**	**5.28**	7	7	7	7	7
45.41	**38.5**	**2.44**	7	7	7	7	7	**76.0**	**4.80**	7	7	7	7	7
49.65	35.2	**2.23**	7	7	7	7	7	**69.5**	**4.39**	7	7	7	7	7
54.49	**32.1**	**2.03**	7	7	7	7	7	**63.3**	**4.00**	7	7	7	7	7
60.08	**29.1**	**1.84**	7	7	7	7	7	**57.4**	**3.63**	7	7	7	7	7
66.60	**26.3**	**1.66**	7	7	7	7	7	**51.8**	**3.27**	7	7	7	7	7
75.45	**23.2**	**1.47**	6	6	6	6	6	**45.7**	**2.89**	6	6	6	6	6
83.25	**21.0**	**1.33**	6	6	6	6	6	**41.4**	**2.62**	6	6	6	6	6
94.12	**18.6**	**1.18**	6	6	6	6	6	**36.7**	**2.32**	6	6	6	6	6
107.47	**16.3**	**1.03**	6	6	6	6	6	**32.1**	**2.03**	6	6	6	6	6
122.19	**14.3**	**0.91**	5	5	5	5	5	**28.2**	**1.78**	5	5	5	5	5
130.78	**13.4**	**0.85**	5	5	5	5	5	**26.4**	**1.67**	5	5	5	5	5
150.76	**11.6**	**0.73**	4.7	4.7	4.7	4.7	4.7	**22.9**	**1.45**	4.7	4.7	4.7	4.7	4.7
169.53	**10.3**	**0.65**	4.3	4.3	4.3	4.3	4.3	**20.4**	**1.29**	4.4	4.4	4.4	4.4	4.4

RHB thermal factors

Ambient temp (Deg. F)	Thermal factor
0	1.83
20	1.59
40	1.27
60	1.11
68	1.00
80	0.87
100	0.65
120	0.43

Rated power as shown on the table above is for the largest available motor frame for a unit size and ratio. When using the factors in the table, compare result with the actual ratio and motor frame used.

Example: RHB 48, 11.95:1, 3450 RPM input speed, 180TC motor frame at 100 degree F ambient, A1 mounting position:

According to the table above, this unit is capable of 10 Hp Thermally at 68 degree F. To convert this to the \capability at 100 degrees F, multiply the rating by the factor in the Thermal Factors table (0.65). Actual Thermal Rating is 10*0.65 = 6.5 Hp. The mechanical rating for the RHB 48, 11.95, 180TC frame is 12.95 Hp. This unit is now thermally limited to 6.5 Hp.

.

Thermal ratings – RHB 58

The Thermal Hp ratings shown in the table below are based on an ambient temperature of 68° F, continuous operation and fan cooled motors as well as with the standard ISO220 factory filled lubricant. For ratings at other ambient temperatures, please consult Thermal Factors table below. If using with different lubricants, please contact Application Engineering. Darker shaded areas indicate that the unit is thermally limited.

Ratio	1750 RPM							3450 RPM						
	Output speed	Rated power	Mounting position					Output speed	Rated power	Mounting position				
			A1	A2	A3	A4	A5 A6			A1	A2	A3	A4*	A5 A6
	RPM	Hp	Hp	Hp	Hp	Hp	Hp	RPM	Hp	Hp	Hp	Hp	Hp	Hp
5.83	**300.2**	**13.88**	21	21	21	21	21	**591.8**	**26.90**	8	7	7	7	7
7.31	**239.4**	**12.30**	20	20	20	21	20	**472.0**	**22.70**	10	10	10	9	10
8.12	**215.5**	**11.10**	20	20	20	20	20	**424.9**	**20.70**	11	11	11	10	10
9.34	**187.4**	**9.70**	19	19	19	19	19	**369.4**	**18.20**	11	11	11	11	11
10.04	**174.3**	**9.00**	19	19	19	19	19	**343.6**	**17.00**	11	11	11	11	11
11.7	149.6	7.70	18	18	18	18	18	**294.9**	**14.80**	11	11	11	11	11
12.86	**136.1**	**11.66**	16	16	16	16	16	**268.3**	**18.90**	9	8	8	8	8
14.29	**122.5**	**10.50**	16	15	16	15	15	**241.4**	**17.60**	9	9	9	9	9
16.43	**106.5**	**9.13**	15	15	15	15	15	**210.0**	**15.90**	9	9	9	9	9
17.67	**99.0**	**8.48**	15	14	15	14	14	**195.2**	**15.10**	9	9	9	9	9
20.29	**86.2**	**7.28**	14	14	14	14	14	**170.0**	**13.60**	9	9	9	9	9
22.32	**78.4**	**6.72**	13	13	13	13	13	**154.6**	**12.90**	9	9	9	9	9
24.29	**72.0**	**6.18**	13	13	13	13	13	**142.0**	**12.10**	8	8	8	8	8
26.55	**65.9**	**5.65**	8	8	8	8	8	**129.9**	**10.10**	5	5	5	5	5
33.31	52.5	**4.50**	7	7	7	7	7	**103.6**	**8.60**	5	5	5	5	5
37.01	**47.3**	**4.05**	7	7	7	7	7	**93.2**	**7.99**	5	5	5	5	5
42.56	41.1	**3.52**	7	7	7	7	7	**81.1**	**6.95**	5	5	5	5	5
45.78	**38.2**	**3.27**	7	7	7	7	7	**75.4**	**6.46**	5	5	5	5	5
53.34	32.8	**2.81**	6	6	6	6	6	**64.7**	**5.54**	5	5	5	5	5
57.83	30.3	**2.60**	6	6	6	6	6	**59.7**	**5.12**	5	5	5	5	5
62.92	**27.8**	**2.38**	6	6	6	6	6	**54.8**	**4.70**	4.9	4.9	4.9	4.9	4.9
68.74	**25.5**	**2.18**	5	5	5	5	5	**50.2**	**4.30**	4.8	4.7	4.8	4.7	4.7
75.45	**23.2**	**1.99**	5	5	5	5	5	**45.7**	**3.92**	4.6	4.6	4.6	4.6	4.6
83.28	**21.0**	**1.80**	5	5	5	5	5	**41.4**	**3.55**	4.4	4.4	4.4	4.4	4.4
93.96	**18.6**	**1.59**	5	5	5	5	5	**36.7**	**3.14**	4.2	4.2	4.2	4.2	4.2
103.33	**16.9**	**1.45**	4.8	4.8	4.8	4.8	4.8	**33.4**	**2.86**	4	4	4	4	4
114.4	**15.3**	**1.31**	4.5	4.5	4.5	4.5	4.5	**30.2**	**2.59**	3.8	3.8	3.8	3.8	3.8
134.17	**13.0**	**1.11**	4.4	4.4	4.4	4.4	4.4	**25.7**	**2.20**	3.6	3.6	3.6	3.6	3.6
148.05	**11.8**	**1.01**	4.1	4.1	4.1	4.1	4.1	**23.3**	**2.00**	3.4	3.4	3.4	3.4	3.4
164.71	**10.6**	**0.91**	3.9	3.9	3.9	3.9	3.9	**20.9**	**1.79**	3.3	3.3	3.3	3.3	3.3
185.06	**9.5**	**0.81**	3.6	3.6	3.6	3.6	3.6	**18.6**	**1.59**	3	3	3	3	3

RHB thermal factors

Ambient temp (Deg. F)	Thermal factor
0	1.83
20	1.59
40	1.27
60	1.11
68	1.00
80	0.87
100	0.65
120	0.43

Rated power as shown on the table above is for the largest available motor frame for a unit size and ratio. When using the factors in the table, compare result with the actual ratio and motor frame used.

Example: RHB 58, 26.55:1, 140TC motor frame at 40 degree F ambient, A3 mounting position:

According to the table above, this unit is capable of 8 Hp Thermally at 68 degree F. To convert this to the capability at 40 degrees F, multiply the rating by the factor in the Thermal Factors table (1.27). Actual Thermal Rating is 8*1.27 = 10.16 Hp. The mechanical rating for the RHB 58, 26.55, 140TC frame is 5.01 Hp. This unit is not thermally limited.

Thermal ratings – RHB 68

The Thermal Hp ratings shown in the table below are based on an ambient temperature of 68° F, continuous operation and fan cooled motors as well as with the standard ISO220 factory filled lubricant. For ratings at other ambient temperatures, please consult Thermal Factors table below. If using with different lubricants, please contact Application Engineering. Darker shaded areas indicate that the unit is thermally limited.

Ratio	1750 RPM							3450 RPM						
	Output speed	Rated power	Mounting position					Output speed	Rated power	Mounting position				
			A1	A2	A3	A4	A5 A6			A1	A2	A3	A4*	A5 A6
	RPM	Hp	Hp	Hp	Hp	Hp	Hp	RPM	Hp	Hp	Hp	Hp	Hp	Hp
5.36	**326.4**	**13.88**	34	33	33	33	33	**643.5**	**23.72**	21	18	19	16	16
6.44	**271.7**	**13.88**	33	33	33	33	33	**535.6**	**20.98**	26	24	24	22	22
7.58	**230.8**	**13.88**	31	31	31	31	31	**454.9**	**18.80**	27	25	26	25	25
8.50	**205.9**	**13.88**	31	31	31	31	31	**406.0**	**17.41**	28	27	28	27	27
9.52	**183.8**	**13.76**	29	29	29	29	29	**362.3**	**16.11**	28	27	28	27	27
10.40	168.3	12.94	29	29	29	29	29	**331.9**	**15.18**	28	28	28	28	28
11.94	**146.5**	**13.71**	20	20	20	20	20	**288.9**	**20.49**	15	13	14	12	13
14.35	**122.0**	**12.06**	20	19	20	19	19	**240.4**	**18.02**	17	15	16	15	15
16.89	**103.6**	**10.75**	18	18	18	18	18	**204.2**	**16.08**	17	16	17	16	16
18.93	**92.4**	**9.93**	18	18	18	18	18	**182.3**	**14.85**	17	17	17	17	17
21.22	**82.5**	**9.17**	17	17	17	17	17	**162.6**	**13.71**	17	17	17	17	17
23.16	**75.6**	**8.62**	17	17	17	17	17	**149.0**	**12.89**	17	17	17	17	17
25.42	**68.8**	**7.93**	16	16	16	16	16	**135.7**	**12.08**	16	16	16	16	16
27.99	**62.5**	**7.20**	15	15	15	15	15	**123.2**	**11.29**	16	16	16	16	16
30.38	**57.6**	**6.42**	15	15	15	15	15	**113.6**	**10.66**	15	15	15	15	15
32.78	**53.4**	**6.15**	12	12	12	12	12	**105.2**	**8.90**	11	10	10	10	10
39.39	**44.4**	**5.12**	11	11	11	11	11	**87.6**	**7.83**	11	10	11	10	10
46.37	37.7	**4.35**	10	10	10	10	10	**74.4**	**6.98**	10	10	10	10	10
51.96	**33.7**	**3.88**	10	10	10	10	10	**66.4**	**6.45**	10	10	10	10	10
58.23	**30.1**	**3.46**	9	9	9	9	9	**59.2**	**5.95**	10	10	10	10	10
63.57	**27.5**	**3.17**	9	9	9	9	9	**54.3**	**5.60**	10	10	10	10	10
69.78	**25.1**	**2.89**	9	9	9	9	9	**49.4**	**5.25**	9	9	9	9	9
76.84	**22.8**	**2.62**	8	8	8	8	8	**44.9**	**4.90**	9	9	9	9	9
83.40	**21.0**	**2.42**	8	8	8	8	8	**41.4**	**4.63**	9	9	9	9	9
90.89	**19.3**	**2.22**	8	8	8	8	8	**38.0**	**4.36**	9	9	9	9	9
99.55	**17.6**	**2.03**	7	7	7	7	7	**34.7**	**3.99**	8	8	8	8	8
109.64	**16.0**	**1.84**	7	7	7	7	7	**31.5**	**3.62**	8	8	8	8	8
126.09	**13.9**	**1.60**	7	7	7	7	7	**27.4**	**3.15**	8	8	8	8	8
136.60	**12.8**	**1.48**	7	7	7	7	7	**25.3**	**2.91**	7	7	7	7	7
150.98	**11.6**	**1.34**	6	6	6	6	6	**22.9**	**2.63**	7	7	7	7	7
176.14	**9.9**	**1.14**	6	6	6	6	6	**19.6**	**2.26**	7	7	7	7	7
196.07	**8.9**	**1.03**	6	6	6	6	6	**17.6**	**2.03**	6	6	6	6	6
215.68	**8.1**	**0.93**	6	6	6	6	6	**16.0**	**1.84**	6	6	6	6	6
243.72	**7.2**	**0.83**	5	5	5	5	5	**14.2**	**1.63**	5	5	5	5	5

RHB thermal factors

Ambient temp (Deg. F)	Thermal factor
0	1.83
20	1.59
40	1.27
60	1.11
68	1.00
80	0.87
100	0.65
120	0.43

Rated power as shown on the table above is for the largest available motor frame for a unit size and ratio. When using the factors in the table, compare result with the actual ratio and motor frame used.

Example: RHB 68, 69.78:1, 1750 RPM input speed, 180TC motor frame at 20 degree F ambient, A2 mounting position:

According to the table above, this unit is capable of 9 Hp Thermally at 68 degree F. To convert this to the capability at 20 degrees F, multiply the rating by the factor in the Thermal Factors table (1.59). Actual Thermal Rating is 9*1.59 = 14.31 Hp. The mechanical rating for the RHB 68, 69.78, 180TC frame is 2.89 Hp. This unit is not thermally limited.

Thermal ratings – RHB 88

The Thermal Hp ratings shown in the table below are based on an ambient temperature of 68° F, continuous operation and fan cooled motors as well as with the standard ISO220 factory filled lubricant. For ratings at other ambient temperatures, please consult Thermal Factors table below. If using with different lubricants, please contact Application Engineering. Darker shaded areas indicate that the unit is thermally limited.

Ratio	1750 RPM							3450 RPM						
	Output speed	Rated power	Mounting position					Output speed	Rated power	Mounting position				
			A1	A2	A3	A4	A5 A6			A1	A2	A3	A4*	A5 A6
	RPM	Hp	Hp	Hp	Hp	Hp	Hp	RPM	Hp	Hp	Hp	Hp	Hp	Hp
5.54	**315.7**	**26.94**	58	56	57	56	56	**622.4**	**42.96**	24	12	15	8	8
6.69	**261.7**	**25.39**	58	57	57	57	57	**515.9**	**37.92**	35	25	29	23	23
8.03	**218.1**	**23.75**	60	59	59	59	59	**429.9**	**33.57**	44	38	41	37	37
9.41	**186.0**	**22.21**	58	58	58	58	58	**366.7**	**30.16**	47	44	45	43	43
11.64	**150.3**	**26.93**	42	41	42	41	41	**296.4**	**35.95**	22	13	18	13	13
14.04	**124.6**	**24.90**	42	41	42	41	41	**245.7**	**31.53**	28	21	26	22	22
16.85	**103.8**	**21.91**	42	42	42	42	42	**204.7**	**27.75**	33	29	32	30	30
19.75	**88.6**	**19.60**	41	41	41	41	41	**174.6**	**24.83**	35	32	34	33	32
23.54	**74.3**	**17.23**	38	38	38	38	38	**146.5**	**21.96**	34	33	34	33	33
25.53	**68.5**	**15.89**	38	38	38	38	38	**135.1**	**20.75**	35	34	35	34	34
28.50	**61.4**	**14.24**	36	36	36	36	36	**121.1**	**19.21**	34	33	34	33	33
30.87	**56.7**	**13.14**	35	35	35	35	35	**111.8**	**18.16**	34	33	34	33	33
34.40	**50.9**	**11.80**	23	23	23	23	23	**100.3**	**18.13**	17	11	14	13	12
41.50	**42.2**	**9.78**	22	22	22	22	22	**83.1**	**15.90**	18	14	16	16	15
49.80	**35.1**	**8.15**	22	22	22	22	22	**69.3**	**13.99**	19	17	18	18	18
58.37	**30.0**	**6.95**	21	21	21	21	21	**59.1**	**12.52**	19	18	19	18	18
69.57	**25.2**	**5.83**	19	19	19	19	19	**49.6**	**11.08**	18	17	18	18	18
75.45	**23.2**	**5.38**	19	19	19	19	19	**45.7**	**10.46**	18	17	18	18	18
84.21	**20.8**	**4.82**	18	18	18	18	18	**41.0**	**9.49**	18	17	18	18	17
91.22	**19.2**	**4.45**	18	18	18	18	18	**37.8**	**8.76**	17	17	17	17	17
103.38	**16.9**	**3.92**	17	17	17	17	17	**33.4**	**7.73**	16	16	16	16	16
111.37	**15.7**	**3.64**	16	16	16	16	16	**31.0**	**7.18**	16	16	16	16	16
120.42	**14.5**	**3.37**	16	16	16	16	16	**28.6**	**6.64**	15	15	15	15	15
130.77	**13.4**	**3.10**	15	15	15	15	15	**26.4**	**6.11**	15	15	15	15	15
144.58	**12.1**	**2.81**	14	14	14	14	14	**23.9**	**5.53**	14	14	14	14	14
156.63	**11.2**	**2.59**	14	14	14	14	14	**22.0**	**5.10**	13	13	13	13	13
176.50	**9.9**	**2.30**	13	13	13	13	13	**19.5**	**4.53**	13	13	13	13	13
193.24	**9.1**	**2.10**	12	12	12	12	12	**17.9**	**3.23**	12	12	12	12	12
215.25	**8.1**	**1.88**	12	12	12	12	12	**16.0**	**3.71**	12	12	12	12	12
246.13	**7.1**	**1.65**	11	11	11	11	11	**14.0**	**3.25**	11	11	11	11	11
272.95	**6.4**	**1.49**	10	10	10	10	10	**12.6**	**2.93**	11	11	11	11	11
302.68	**5.8**	**1.34**	10	10	10	10	10	**11.4**	**2.64**	10	10	10	10	10

RHB thermal factors

Ambient temp (Deg. F)	Thermal factor
0	1.83
20	1.59
40	1.27
60	1.11
68	1.00
80	0.87
100	0.65
120	0.43

Rated power as shown on the table above is for the largest available motor frame for a unit size and ratio. When using the factors in the table, compare result with the actual ratio and motor frame used.

Example: RHB 88, 8.03:1, 3450 RPM input speed, 180TC motor frame at 60 degree F ambient, A3 mounting position:

According to the table above, this unit is capable of 41 Hp Thermally at 68 degree F. To convert this to the capability at 60 degrees F, multiply the rating by the factor in the Thermal Factors table (1.11). Actual Thermal Rating is 41*1.11 = 45.51 Hp. The mechanical rating for the RHB 88, 8.03, 180TC frame is 20.42 Hp. This unit is not thermally limited.

Thermal ratings – RHB 108

The Thermal Hp ratings shown in the table below are based on an ambient temperature of 68° F, continuous operation and fan cooled motors as well as with the standard ISO220 factory filled lubricant. For ratings at other ambient temperatures, please consult Thermal Factors table below. If using with different lubricants, please contact Application Engineering. Darker shaded areas indicate that the unit is thermally limited.

Ratio	1750 RPM							3450 RPM						
	Output speed	Rated power	Mounting position					Output Speed	Rated power	Mounting position				
			A1	A2	A3	A4	A5 A6			A1	A2	A3	A4*	A5 A6
	RPM	Hp	Hp	Hp	Hp	Hp	Hp	RPM	Hp	Hp	Hp	Hp	Hp	Hp
7.68	**228.0**	**45.36**	82	80	80	80	79	**449.4**	**81.12**	70	48	49	52	46
9.36	**186.9**	**37.72**	89	87	89	87	87	**368.5**	**69.65**	51	33	45	32	32
10.97	**159.5**	**32.56**	87	85	86	85	85	**314.5**	**60.13**	60	47	57	48	48
12.90	**135.7**	**28.01**	87	86	87	86	86	**267.5**	**51.74**	70	62	69	62	62
13.74	**127.4**	**42.72**	61	59	59	59	59	**251.1**	**70.38**	52	36	37	39	35
16.75	104.4	37.17	65	63	64	63	63	**205.9**	**61.24**	39	25	36	27	27
19.63	**89.1**	**33.74**	62	62	63	62	62	**175.7**	**54.82**	45	35	43	37	37
23.08	**75.8**	**29.56**	63	62	62	62	62	**149.5**	**48.93**	51	45	51	46	46
26.48	**66.1**	**26.02**	60	60	60	60	60	**130.3**	**44.46**	52	48	52	49	49
31.25	**56.0**	**22.31**	56	56	56	56	56	**110.4**	**39.58**	51	49	51	49	49
33.87	**51.7**	**20.70**	55	55	55	55	55	**101.8**	**37.41**	52	50	52	50	50
36.44	**48.0**	**19.24**	41	39	40	40	39	**94.7**	**31.72**	32	20	21	24	20
44.44	**39.4**	**16.60**	37	36	37	37	37	**77.6**	**27.61**	27	19	25	23	21
52.08	**33.6**	**14.17**	36	35	36	36	35	**66.2**	**24.71**	29	23	28	26	25
61.22	28.6	12.05	35	35	35	35	35	**56.4**	**22.06**	31	27	30	29	28
70.24	**24.9**	**10.50**	34	33	34	34	33	**49.1**	**20.04**	31	28	30	29	29
82.90	**21.1**	**8.90**	31	31	31	31	31	**41.6**	**17.53**	29	28	29	29	29
89.85	**19.5**	**8.21**	31	31	31	31	31	**38.4**	**16.18**	30	28	30	29	29
99.90	**17.5**	**7.38**	29	29	29	29	29	**34.5**	**14.55**	28	28	28	28	28
108.52	**16.1**	**6.80**	28	28	28	28	28	**31.8**	**13.39**	28	28	28	28	28
120.03	**14.6**	**6.15**	27	27	27	27	27	**28.7**	**12.11**	27	27	27	27	27
128.86	**13.6**	**5.72**	26	26	26	26	26	**26.8**	**11.28**	26	26	26	26	26
138.87	**12.6**	**5.31**	25	25	25	25	25	**24.8**	**9.67**	25	25	25	25	25
150.31	**11.6**	**4.91**	24	24	24	24	24	**23.0**	**8.89**	24	24	24	24	24
163.51	**10.7**	**4.51**	23	23	23	23	23	**21.1**	**8.12**	23	23	23	23	23
178.90	**9.8**	**4.12**	22	22	22	22	22	**19.3**	**8.12**	23	22	23	23	22
201.11	**8.7**	**3.67**	21	21	21	21	21	**17.2**	**7.23**	22	22	22	22	22
219.64	**8.0**	**3.36**	20	20	20	20	20	**15.7**	**6.62**	21	21	21	21	21
243.47	**7.2**	**3.03**	19	19	19	19	19	**14.2**	**5.97**	20	20	20	20	20
278.10	**6.3**	**2.65**	18	18	18	18	18	**12.4**	**5.23**	19	19	19	19	19
307.24	**5.7**	**2.40**	17	17	17	17	17	**11.2**	**4.73**	18	18	18	18	18

RHB thermal factors

Ambient temp (Deg. F)	Thermal factor
0	1.83
20	1.59
40	1.27
60	1.11
68	1.00
80	0.87
100	0.65
120	0.43

Rated power as shown on the table above is for the largest available motor frame for a unit size and ratio. When using the factors in the table, compare result with the actual ratio and motor frame used.

Example: RHB 108, 23.08:1, 3450 RPM input speed, 210TC motor frame at 80 degree F ambient, A1 mounting position:

According to the table above, this unit is capable of 51 Hp Thermally at 68 degree F. To convert this to the capability at 80 degrees F, multiply the rating by the factor in the Thermal Factors table (0.87). Actual Thermal Rating is 51*0.87 = 44.37 Hp. The mechanical rating for the RHB 108, 23.08, 210TC frame is 48.93 Hp. This unit is now thermally limited to 44.37 Hp.

Thermal ratings – RHB 128

The Thermal Hp ratings shown in the table below are based on an ambient temperature of 68° F, continuous operation and fan cooled motors as well as with the standard ISO220 factory filled lubricant. For ratings at other ambient temperatures, please consult Thermal Factors table below. If using with different lubricants, please contact Application Engineering. Darker shaded areas indicate that the unit is thermally limited.

Ratio	1750 RPM							3450 RPM						
	Output speed	Rated power	Mounting position					Output speed	Rated power	Mounting position				
			A1	A2	A3	A4	A5 A6			A1	A2	A3	A4*	A5 A6
	RPM	Hp	Hp	Hp	Hp	Hp	Hp	RPM	Hp	Hp	Hp	Hp	Hp	Hp
7.10	**246.4**	**92.65**	106	94	100	90	92	**485.8**	**140.63**	0	0	0	0	0
8.26	**211.8**	**85.54**	106	99	103	97	97	**417.6**	**127.06**	11	0	0	0	0
9.16	**191.1**	**78.21**	109	103	107	102	103	**376.7**	**118.56**	29	0	17	0	0
10.88	**160.8**	**67.60**	105	102	105	102	102	**317.0**	**105.49**	50	26	46	22	25
12.56	**139.3**	**59.21**	102	100	102	100	100	**274.7**	**95.70**	63	45	60	42	44
13.00	134.6	75.26	88	79	85	78	79	**265.4**	**125.35**	0	0	0	0	0
15.13	**115.7**	**67.69**	88	82	87	82	82	**228.1**	**112.74**	14	0	8	0	0
16.76	**104.4**	**62.99**	90	85	89	85	86	**205.8**	**104.92**	28	0	24	0	0
19.92	**87.8**	**55.82**	87	84	87	84	85	**173.2**	**92.98**	44	25	45	25	27
22.99	**76.1**	**49.11**	84	82	84	82	82	**150.1**	**84.10**	54	39	54	40	41
27.02	**64.8**	**42.16**	84	83	84	83	83	**127.7**	**75.14**	63	54	64	55	56
30.61	**57.2**	**37.54**	80	79	80	80	80	**112.7**	**68.84**	66	59	66	60	60
35.92	**48.7**	**32.17**	74	74	74	74	74	**96.0**	**59.69**	65	60	65	61	61
39.19	**44.7**	**29.47**	73	73	73	73	73	**88.0**	**54.34**	66	62	66	63	63
41.38	**42.3**	**27.93**	52	47	50	49	48	**83.4**	**48.18**	21	0	0	0	0
48.14	**36.3**	**24.01**	50	47	49	49	48	**71.7**	**43.43**	26	0	17	12	8
53.36	**32.8**	**21.66**	50	48	49	49	48	**64.7**	**40.33**	30	12	24	20	16
63.41	27.6	**18.23**	48	46	47	47	47	**54.4**	**35.11**	33	21	31	27	25
73.18	**23.9**	**15.79**	46	45	45	45	45	**47.1**	**30.75**	35	26	34	31	29
85.98	**20.4**	**13.44**	45	44	45	44	44	**40.1**	**26.48**	37	32	37	35	34
97.44	**18.0**	**11.86**	43	43	43	43	42	**35.4**	**23.37**	37	33	37	36	35
114.34	**15.3**	**10.11**	40	39	40	40	39	**30.2**	**19.92**	36	33	36	35	34
124.73	**14.0**	**9.27**	39	39	39	39	39	**27.7**	**18.26**	36	34	36	36	35
136.06	**12.9**	**8.49**	37	37	37	37	37	**25.4**	**16.74**	35	33	35	34	34
146.84	**11.9**	**7.87**	36	36	36	36	36	**23.5**	**15.51**	34	33	34	34	33
164.11	**10.7**	**7.04**	34	34	34	34	34	**21.0**	**13.88**	33	32	33	33	32
175.80	**10.0**	**6.57**	33	33	33	33	33	**19.6**	**12.95**	32	31	32	32	31
189.04	**9.3**	**6.11**	31	31	31	31	31	**18.2**	**12.05**	31	30	30	31	30
204.18	**8.6**	**5.66**	30	30	30	30	30	**16.9**	**11.15**	30	29	29	29	29
221.64	**7.9**	**5.21**	29	29	29	29	29	**15.6**	**10.27**	29	28	28	29	28
242.02	**7.2**	**4.78**	28	28	28	28	28	**14.3**	**9.41**	28	27	27	27	27
270.90	**6.5**	**4.27**	26	26	26	26	26	**12.7**	**8.41**	26	26	26	26	26
295.38	**5.9**	**3.91**	25	25	25	25	25	**11.7**	**7.71**	25	25	25	25	25

RHB thermal factors

Ambient temp (Deg. F)	Thermal factor
0	1.83
20	1.59
40	1.27
60	1.11
68	1.00
80	0.87
100	0.65
120	0.43

Rated power as shown on the table above is for the largest available motor frame for a unit size and ratio. When using the factors in the table, compare result with the actual ratio and motor frame used.

A thermal rating of 0 indicates that this ratio and input RPM are not recommended.

Example: RHB 128, 204.18:1, 1750 RPM input speed, 210TC motor frame at 40 degree F ambient, A5 mounting position:

According to the table above, this unit is capable of 30.0 Hp Thermally at 68 degree F. To convert this to the capability at 40 degrees F, multiply the rating by the factor in the Thermal Factors table (1.27). Actual Thermal Rating is 30.0*1.27 = 38.1 Hp. The mechanical rating for the RHB 128, 204.18, 210TC frame is 5.66 Hp. This unit is not thermally limited.

Thermal ratings – RHB 148

The Thermal Hp ratings shown in the table below are based on an ambient temperature of 68° F, continuous operation and fan cooled motors as well as with the standard ISO220 factory filled lubricant. For ratings at other ambient temperatures, please consult Thermal Factors table below. If using with different lubricants, please contact Application Engineering. Darker shaded areas indicate that the unit is thermally limited.

Ratio	1750 RPM							3450 RPM						
	Output speed	Rated power	Mounting position					Output speed	Rated power	Mounting position				
			A1	A2	A3	A4	A5 A6			A1	A2	A3	A4*	A5 A6
	RPM	Hp	Hp	Hp	Hp	Hp	Hp	RPM	Hp	Hp	Hp	Hp	Hp	Hp
4.83	**362.3**	**136.15**	49	18	30	0	0	**714.2**	**253.56**	0	0	0	0	0
6.43	**272.3**	**126.51**	89	68	78	56	60	**536.7**	**209.62**	0	0	0	0	0
7.44	**235.1**	**116.71**	101	87	95	79	82	**463.6**	**189.91**	0	0	0	0	0
8.79	**199.2**	**105.76**	104	96	102	92	93	**392.6**	**169.74**	0	0	0	0	0
9.77	179.1	136.16	35	15	29	7	12	**353.1**	**244.22**	0	0	0	0	0
13.00	**134.6**	**126.53**	66	55	61	54	54	**265.4**	**207.73**	0	0	0	0	0
15.05	**116.2**	**116.70**	63	54	62	52	54	**229.2**	**189.91**	0	0	0	0	0
17.77	**98.5**	**103.53**	64	58	64	58	59	**194.1**	**169.74**	0	0	0	0	0
19.84	**88.2**	**93.52**	65	61	65	60	61	**173.9**	**157.48**	9	0	9	0	0
23.19	**75.5**	**81.03**	65	62	65	62	63	**148.8**	**141.61**	23	7	26	7	9
26.58	**65.8**	**71.44**	64	62	64	62	62	**129.8**	**128.96**	33	20	35	20	22
30.74	**56.9**	**62.48**	64	62	64	62	63	**112.2**	**114.77**	41	31	43	32	33
31.10	**56.3**	**63.25**	30	19	24	23	21	**110.9**	**116.84**	0	0	0	0	0
41.38	42.3	47.54	31	25	28	27	26	**83.4**	**91.66**	0	0	0	0	0
47.91	**36.5**	**41.06**	31	27	30	29	28	**72.0**	**80.10**	6	0	0	0	0
56.57	30.9	**34.78**	30	28	29	28	28	**61.0**	**68.52**	10	0	7	0	0
63.16	**27.7**	**31.15**	30	28	29	29	28	**54.6**	**61.37**	14	0	12	8	6
73.80	**23.7**	**26.66**	28	27	28	27	27	**46.7**	**52.52**	17	9	17	13	12
84.61	**20.7**	**23.25**	27	26	27	26	26	**40.8**	**45.81**	19	12	19	16	15
97.82	**17.9**	**20.11**	25	25	25	25	25	**35.3**	**39.62**	20	15	20	18	17
101.53	**17.2**	**19.37**	26	25	26	26	26	**34.0**	**38.17**	21	17	21	20	19
112.35	**15.6**	**17.51**	25	25	25	25	25	**30.7**	**34.50**	20	19	21	20	20
131.49	**13.3**	**14.96**	23	23	23	23	23	**26.2**	**29.48**	21	19	21	20	20
142.41	**12.3**	**13.81**	23	22	23	23	22	**24.2**	**27.22**	21	19	21	20	20
158.93	**11.0**	**12.38**	22	21	22	22	22	**21.7**	**24.39**	21	19	21	20	20
168.50	**10.4**	**11.67**	21	21	21	21	21	**20.5**	**23.00**	20	19	20	20	19
191.02	**9.2**	**10.30**	20	20	20	20	20	**18.1**	**20.29**	19	19	19	19	19
204.38	**8.6**	**9.63**	20	20	20	20	20	**16.9**	**18.96**	19	18	19	19	18
214.96	**8.1**	**9.15**	18	18	18	18	18	**16.0**	**18.03**	18	18	18	18	18
231.95	**7.5**	**8.48**	18	18	18	18	18	**14.9**	**16.71**	18	17	17	17	17
251.55	**7.0**	**7.81**	17	17	17	17	17	**13.7**	**15.41**	17	17	17	17	17
274.42	**6.4**	**7.17**	16	16	16	16	16	**12.6**	**14.12**	16	16	16	16	16
306.08	**5.7**	**6.43**	15	15	15	15	15	**11.3**	**12.66**	15	15	15	15	15

RHB thermal factors

Ambient temp (Deg. F)	Thermal factor
0	1.83
20	1.59
40	1.27
60	1.11
68	1.00
80	0.87
100	0.65
120	0.43

Rated power as shown on the table above is for the largest available motor frame for a unit size and ratio. When using the factors in the table, compare result with the actual ratio and motor frame used.A thermal rating of 0 indicates that this ratio and input RPM are not recommended.

Example: RHB 148, 13.00:1, 1750 RPM input speed, 320TC motor frame at 80 degree F ambient, A1 mounting position:

According to the table above, this unit is capable of 66 Hp Thermally at 68 degree F. To convert this to the capability at 80 degrees F, multiply the rating by the factor in the Thermal Factors table (0.87). Actual Thermal Rating is 66*0.87 = 57.42 Hp. The mechanical rating for the RHB 148, 13.00, 320TC frame is 126.53 Hp. This unit is now thermally limited to 57.42 Hp.

Thermal ratings – RHB 168

The Thermal Hp ratings shown in the table below are based on an ambient temperature of 68° F, continuous operation and fan cooled motors as well as with the standard ISO220 factory filled lubricant. For ratings at other ambient temperatures, please consult Thermal Factors table below. If using with different lubricants, please contact Application Engineering. Darker shaded areas indicate that the unit is thermally limited.

Ratio	1750 RPM							3450 RPM						
	Output speed	Rated power	Mounting position					Output speed	Rated power	Mounting position				
			A1	A2	A3	A4	A5 A6			A1	A2	A3	A4*	A5 A6
	RPM	Hp	Hp	Hp	Hp	Hp	Hp	RPM	Hp	Hp	Hp	Hp	Hp	Hp
6.61	**264.7**	**120.91**	184	136	157	91	108	**521.9**	**238.23**	0	0	0	0	0
8.64	**202.6**	**117.78**	215	190	206	173	180	**399.4**	**230.13**	0	0	0	0	0
10.17	**172.0**	**114.28**	226	210	221	200	205	**339.1**	**212.54**	0	0	0	0	0
11.67	**150.0**	**106.09**	222	211	221	206	209	**295.7**	**219.32**	56	0	44	0	0
12.41	141.0	120.91	116	85	112	68	80	**278.1**	**238.23**	0	0	0	0	0
16.21	**107.9**	**117.77**	157	139	157	132	139	**212.8**	**230.13**	0	0	0	0	0
19.09	**91.7**	**114.28**	165	153	165	149	153	**180.7**	**212.54**	9	0	11	0	0
21.90	**79.9**	**106.09**	163	155	164	154	156	**157.5**	**219.32**	44	0	52	0	0
24.14	**72.5**	**100.11**	163	157	165	156	158	**142.9**	**208.58**	72	27	80	20	31
28.54	**61.3**	**89.27**	158	154	159	154	155	**120.9**	**185.96**	102	71	112	67	76
32.53	**53.8**	**81.25**	152	149	153	149	150	**106.1**	**169.98**	118	94	124	93	98
34.55	**50.6**	**96.07**	95	75	88	83	79	**99.8**	**165.01**	0	0	0	0	0
45.15	**38.8**	**73.53**	94	83	92	88	86	**76.4**	**136.83**	25	0	11	0	0
53.18	32.9	62.43	94	87	93	90	89	**64.9**	**122.03**	45	0	37	19	13
60.99	**28.7**	**54.43**	89	85	89	87	86	**56.6**	**107.24**	53	19	52	34	30
67.22	**26.0**	**49.38**	88	85	88	87	86	**51.3**	**97.30**	62	34	62	46	44
79.49	22.0	41.76	84	82	84	83	83	**43.4**	**82.29**	69	50	71	60	58
90.60	**19.3**	**36.64**	80	79	80	79	79	**38.1**	**72.20**	71	58	74	65	64
104.18	**16.8**	**31.87**	76	75	76	76	75	**33.1**	**62.79**	73	63	74	68	67
119.09	**14.7**	**27.88**	75	74	75	74	74	**29.0**	**54.92**	75	69	76	73	72
138.00	**12.7**	**24.04**	70	70	70	70	70	**25.0**	**47.40**	74	70	74	72	71
150.36	11.6	22.08	67	67	67	67	67	**22.9**	**43.50**	72	69	72	71	70
167.50	**10.4**	**19.82**	64	64	64	64	64	**20.6**	**39.05**	70	67	70	69	68
177.43	**9.9**	**18.71**	62	62	62	62	62	**19.4**	**36.86**	68	66	68	67	67
199.54	**8.8**	**16.64**	59	59	59	59	59	**17.3**	**32.78**	65	64	65	65	64
213.33	**8.2**	**15.56**	57	57	57	57	57	**16.2**	**30.66**	63	62	63	63	62
226.15	**7.7**	**14.68**	55	55	55	55	55	**15.3**	**28.92**	61	60	61	61	60
243.80	**7.2**	**13.62**	52	52	52	52	52	**14.2**	**26.83**	59	58	58	59	58
264.18	**6.6**	**12.57**	50	50	50	50	50	**13.1**	**24.76**	57	56	57	57	56
287.95	**6.1**	**10.11**	48	48	48	48	48	**12.0**	**18.82**	55	54	55	55	54

RHB thermal factors

Ambient temp (Deg. F)	Thermal factor
0	1.83
20	1.59
40	1.27
60	1.11
68	1.00
80	0.87
100	0.65
120	0.43

Rated power as shown on the table above is for the largest available motor frame for a unit size and ratio. When using the factors in the table, compare result with the actual ratio and motor frame used. A thermal rating of 0 indicates that this ratio and input RPM are not recommended.

Example: RHB 168, 213.33:1, 3450 RPM input speed, 250TC motor frame at 120 degree F ambient, A2 mounting position:

According to the table above, this unit is capable of 62 Hp Thermally at 68 degree F. To convert this to the capability at 120 degrees F, multiply the rating by the factor in the Thermal Factors table (0.43). Actual Thermal Rating is 62*0.43 = 26.66 Hp. The mechanical rating for the RHB 168, 213.33, 250TC frame is 30.66 Hp. This unit is now thermally limited to 26.66 Hp.

Weights

Weights – RHB 38

Unit size	Input configuration	Catalog number NEMA	Catalog number IEC	Output configuration: Foot mounted Weight (lbs) (L)	Foot mounted Weight (Kg) (L)	Flange mounted B14 Weight (lbs) (L)	B14 Weight (Kg) (L)	B5 Weight (lbs) (L)	B5 Weight (Kg) (L)
38	Clamp collar	B_383CN56C	B_383CI71D	38	17	38	17	42	19
		–	B_383CI80D	42	19	42	19	46	21
		B_383CN140TC	B_383CI90D	42	19	41	19	45	20
		B_383CN180TC	B_383CI100D	46	21	46	21	50	23
		BU383CN56C				41	19	45	20
		BU383CN140TC				44	20	47	21
		BU383CN180TC				49	22	53	24
	3 pc coupled	B_383LN56C	–	46	21	46	21	50	23
		–	B_383LI80D	58	26	58	26	62	28
		B_383LN140TC	B_383LI90D	58	26	58	26	62	28
		–	B_383LI100D	69	31	69	31	73	33
	Separate group (inch / metric)	B_383SI71	B_383SM71	41	19	41	19	45	20
		B_383SI80	B_383SM80	48	22	48	22	52	24
		B_383SI90	B_383SM90	49	22	49	22	53	24
		B_383SI100	B_383SM100	58	26	58	26	62	28
	Integral gearmotor (Hp)	B_383GH71C4	–	45	20	45	20	49	22
		B_383GH71D4		45	20	45	20	49	22
		B_383GH71E4		49	22	49	22	53	24
		B_383GH80F4		49	22	49	22	53	24
		B_383GH80G4		53	24	53	24	57	26
		B_383GH90H4		57	26	57	26	61	28
		B_383GH90I4		63	29	63	29	67	30
		B_383GH100J4		69	31	69	31	73	33

* Weights are approximate

All weights are shown without oil.

(L) – See footnotes page on the inside back cover

Weights – RHB 48

Unit size	Input configuration	Catalog number		Output configuration					
				Foot mounted		Flange mounted			
						B14		B5	
		NEMA	IEC	Weight (lbs) (L)	Weight (Kg) (L)	Weight (lbs) (L)	Weight (Kg) (L)	Weight (lbs) (L)	Weight (Kg) (L)
48	Clamp Collar	B_483CN56C	B_483CI71D	47	21	46	21	52	24
		–	B_483CI80D	51	23	51	23	57	26
		B_483CN140TC	B_483CI90D	51	23	51	23	57	26
		B_483CN180TC	B_483CI100D	55	25	55	25	61	28
		BU483CN56C				50	23	55	25
		BU483CN140TC				53	24	59	27
		BU483CN180TC				58	26	64	29
		B_484CN56C	B_484CI71D	61	28	61	28	67	31
		–	B_484CI80D	65	30	65	30	71	32
		B_484CN140TC	B_484CI90D	65	30	65	30	71	32
		B_484CN180TC	B_484CI100D	71	32	71	32	77	35
		B_485CN56C	B_485CI71D	71	32	71	32	77	35
		–	B_485CI80D	75	34	75	34	81	37
		B_485CN140TC	B_485CI90D	75	34	75	34	81	37
		B_485CN180TC	B_485CI100D	79	36	79	36	85	39
	3 Pc Coupled	B_483LN56C	–	55	25	55	25	61	28
		–	B_483LI80D	67	30	67	30	73	33
		B_483LN140TC	B_483LI90D	67	30	67	30	73	33
		–	B_483LI100D	78	35	78	35	84	38
		B_484LN56C	–	70	32	70	32	76	35
		–	B_484LI80D	75	34	75	34	81	37
		B_484LN140TC	B_484LI90D	75	34	75	34	81	37
		B_484LN180TC	B_484LI100D	88	40	88	40	94	43
		B_485LN56C	–	79	36	79	36	85	39
		–	B_485LI80D	91	41	91	41	97	44
		B_485LN140TC	B_485LI90D	91	41	91	41	97	44
		B_485LN180TC	B_485LI100D	102	46	102	46	108	49
	Separate Group (Inch / Metric)	B_483SI71	B_483SM71	50	23	50	23	56	25
		B_483SI80	B_483SM80	58	26	57	26	63	29
		B_483SI90	B_483SM90	58	26	57	26	63	29
		B_483SI100	B_483SM100	67	30	66	30	72	33
		B_484SI71	B_484SM71	64	29	64	29	70	32
		B_484SI80	B_484SM80	73	33	73	33	79	36
		B_484SI90	B_484SM90	73	33	73	33	79	36
		B_484SI100	B_484SM100	79	36	79	36	85	39
		B_485SI71	B_485SM71	76	35	76	35	82	37
		B_485SI80	B_485SM80	84	38	84	38	90	41
		B_485SI90	B_485SM90	84	38	84	38	90	41
		B_485SI100	B_485SM100	85	39	85	39	91	41
	Integral Gearmotor (Hp)	B_483GH71C4	–	55	25	54	24	60	27
		B_483GH71D4		55	25	54	24	60	27
		B_483GH71E4		59	27	58	26	64	29
		B_483GH80F4		59	27	58	26	64	29
		B_483GH80G4		62	28	62	28	68	31
		B_483GH90H4		67	30	66	30	72	33
		B_483GH90I4		72	33	71	32	77	35
		B_483GH100J4		79	26	78	35	84	38
		B_484GH71C4		65	30	65	30	71	32
		B_484GH71D4		65	30	65	30	71	32
		B_484GH71E4		68	31	68	31	74	34
		B_485GH71C4		79	36	79	36	85	39

* Weights are approximate

All weights are shown without oil.

(L) – See footnotes page on the inside back cover

Weights – RHB 58

Unit size	Input configuration	Catalog number		Output configuration					
				Foot mounted		Flange mounted			
						B14		B5	
		NEMA	IEC	Weight (lbs) (L)	Weight (Kg) (L)	Weight (lbs) (L)	Weight (Kg) (L)	Weight (lbs) (L)	Weight (Kg) (L)
58	Clamp Collar	B_583CN56C	B_583CI71D	78	35	65	30	74	34
		–	B_583CI80D	82	37	69	31	78	35
		B_583CN140TC	B_483CI90D	82	37	69	31	78	35
		B_583CN180TC	B_583CI100D	85	39	73	33	81	37
	3 Pc Coupled	B_583LN56	B_583LI71D	82	37	80	36	90	41
		--	B_583LI80D	103	47	101	46	111	50
		B_583LN140TC	B_583LI90D	103	47	101	46	111	50
		B_583LN180TC	B_583LI100D	114	52	112	51	122	55
		--	B_583LI112D	117	53	115	52	125	57
	Separate Group (Inch / Metric)	B_583SI71	B_583SM71	91	41	89	40	99	45
		B_583SI80	B_583SM80	100	45	98	45	108	49
		B_583SI90	B_583SM90	100	45	98	45	108	49
		B_583SI100	B_583SM100	106	48	104	47	114	52
		B_583SI112	B_583SM112	114	52	112	51	122	55
	Integral Gearmotor (Hp)	MW582GH71C4		90	41	88	40	98	45
		MW582GH71D4		90	41	88	40	98	45
		MW582GH71E4		90	41	88	40	98	45
		MW582GH80F4		94	43	92	42	102	46
		MW582GH80G4	--	94	43	92	42	102	46
		MW582GH90H4		102	46	100	45	110	50
		MW582GH90I4		102	46	100	45	110	50
		MW582GH100J4		114	52	112	51	122	55
		MW582GH112L4		136	62	134	61	144	65

* Weights are Approximate (L) - See Footnotes page on the inside back cover

All weights are shown without oil.

* Weights are approximate

All weights are shown without oil.

(L) – See footnotes page on the inside back cover

Weights – RHB 68

Unit size	Input configuration	Catalog number NEMA	Catalog number IEC	Output configuration: Foot mounted Weight (lbs) (L)	Foot mounted Weight (Kg) (L)	Flange mounted B14 Weight (lbs) (L)	B14 Weight (Kg) (L)	B5 Weight (lbs) (L)	B5 Weight (Kg) (L)
68	Clamp Collar	B_683CN56C	B_683CI71D	86	39	87	39	97	44
		–	B_683CI80D	90	41	90	41	100	45
		B_683CN140TC	B_683CI90D	90	41	91	41	101	46
		B_683CN180TC	B_683CI100D	94	43	94	43	104	47
		–	B_683CI112D	97	44	97	44	107	49
		B_684CN56C	B_684CI71D	98	44	99	45	109	49
		–	B_684CI80D	102	46	103	47	113	51
		B_684CN140TC	B_684CI90D	102	46	103	47	113	51
		B_684CN180TC	B_684CI100D	108	49	109	49	119	54
		B_683CN210TC	-	99	45	99	45	109	50
		B_685CN56C	B_685CI71D	108	49	109	49	119	54
		–	B_685CI80D	112	51	113	51	123	56
		B_685CN140TC	B_685CI90D	112	51	113	51	123	56
		B_685CN180TC	B_685CI100D	116	53	117	53	127	58
	3 Pc Coupled	B_683LN56C	–	94	43	95	43	105	48
		–	B_683LI80D	107	49	107	49	117	53
		B_683LN140TC	B_683LI90D	107	49	107	49	117	53
		B_683LN180TC	B_683LI100D	117	53	117	53	127	58
		–	B_683LI112D	120	54	120	54	130	59
		B_684LN56C	B_684LI71D	107	48	108	49	118	53
		–	B_684LI80D	112	51	113	51	123	56
		B_684LN140TC	B_684LI90D	112	51	113	51	123	56
		B_684LN180TC	B_684LI100D	125	57	126	57	136	62
		B_685LN56C	B_685LI71D	116	53	117	53	127	58
		–	B_685LI80D	128	58	129	58	139	63
		B_685LN140TC	B_685LI90D	128	58	129	58	139	63
		B_685LN180TC	B_685LI100D	139	63	140	63	150	68
	Separate Group (Inch / Metric)	B_683SI71	B_683SM71	89	40	90	41	100	45
		B_683SI80	B_683SM80	97	44	97	44	107	49
		B_683SI90	B_683SM90	97	44	98	44	108	49
		B_683SI100	B_683SM100	106	48	107	49	117	53
		B_684SI112	B_683SM112	108	49	109	49	119	54
		B_684SI71	B_684SM71	101	46	102	46	112	51
		B_684SI80	B_684SM80	110	50	111	50	121	55
		B_684SI90	B_684SM90	110	50	111	50	121	55
		B_684SI100	B_684SM100	116	53	117	53	127	58
		B_685SI71	B_685SM71	113	51	114	52	124	56
		B_685SI80	B_685SM80	121	55	122	55	132	60
		B_685SI90	B_685SM90	121	55	122	55	132	60
		B_685SI100	B_685SM100	122	55	123	56	133	60
	Integral Gearmotor (Hp)	B_683GH71C4	–	94	43	94	43	104	47
		B_683GH71D4		94	43	94	43	104	47
		B_683GH71E4		98	44	98	44	108	49
		B_683GH80F4		98	44	98	44	108	49
		B_683GH80G4		101	46	102	46	112	51
		B_683GH90H4		106	48	106	48	116	53
		B_683GH90I4		111	50	112	51	122	55
		B_683GH100J4		118	54	118	54	128	58
		B_683GH112L4		139	63	140	63	150	68
		B_684GH71C4		102	46	103	47	113	51
		B_684GH71D4		102	46	103	47	113	51
		B_684GH71E4		105	48	106	48	116	53
		B_684GH80F4		109	49	110	50	120	54
		B_684GH80G4		113	51	114	52	124	56
		B_685GH71C4		116	53	117	53	127	58

* Weights are approximate

All weights are shown without oil.

(L) – See footnotes page on the inside back cover

Weights – RHB 88

Unit size	Input configuration	Catalog number NEMA	Catalog number IEC	Output configuration: Foot mounted Weight (lbs) (L)	Foot mounted Weight (Kg) (L)	Flange mounted B14 Weight (lbs) (L)	B14 Weight (Kg) (L)	B5 Weight (lbs) (L)	B5 Weight (Kg) (L)
88	Clamp Collar	B_883CN56C	B_883CI71D	141	64	140	63	155	70
		–	B_883CI80D	145	66	145	66	160	73
		B_883CN140TC	B_883CI90D	145	66	145	66	160	73
		B_883CN180TC	B_883CI100D	149	68	149	68	164	74
		–	B_883CI112D	152	69	152	69	167	76
		B_883CN210TC	B_883CI132 D	169	77	168	76	183	83
		B_883CN250TC	-	171	76	170	77	185	84
		B_884CN56C	B_884CI71D	154	70	154	70	169	77
		–	B_884CI80D	158	72	158	72	173	79
		B_884CN140TC	B_884CI90D	158	72	158	72	173	79
		B_884CN180TC	B_884CI100D	164	74	164	74	179	81
		B_885CN56C	B_885CI71D	164	74	164	74	179	81
		–	B_885CI80D	168	76	168	76	183	83
		B_885CN140TC	B_885CI90D	168	76	168	76	183	83
		B_885CN180TC	B_885CI100D	172	78	172	78	187	85
	3 Pc Coupled	B_883LN56C	–	149	68	148	67	163	74
		–	B_883LI80D	161	73	161	73	176	80
		B_883LN140TC	B_883LI90D	161	73	161	73	176	80
		B_883LN180TC	B_883LI100D	172	78	172	78	187	85
		–	B_883LI112D	176	80	176	80	191	87
		B_883LN210TC	B_883LI132D	198	90	198	90	213	97
		B_884LN56C	B_884LI71D	163	74	163	74	178	81
		–	B_884LI80D	168	76	168	76	183	83
		B_884LN140TC	B_884LI90D	168	76	168	76	183	83
		B_884LN180TC	B_884LI100D	181	82	181	82	196	89
		B_885LN56C	B_885LI71D	172	78	172	78	187	85
		–	B_885LI80D	184	84	184	84	199	90
		B_885LN140TC	B_885LI90D	184	84	184	84	199	90
		B_885LN180TC	B_885LI100D	195	88	195	88	210	95
	Separate Group (Inch / Metric)	B_883SI71	B_883SM71	144	65	144	65	159	72
		B_883SI80	B_883SM80	152	69	152	69	167	76
		B_883SI90	B_883SM90	152	69	152	69	167	76
		B_883SI100	B_883SM100	161	73	161	73	176	80
		B_883SI112	B_883SM112	164	74	164	74	179	81
		B_883SI132	B_883SM132	189	86	189	86	204	93
		B_884SI71	B_884SM71	157	71	157	71	172	78
		B_884SI80	B_884SM80	166	75	166	75	181	82
		B_884SI90	B_884SM90	166	75	166	75	181	82
		B_884SI100	B_884SM100	172	78	172	78	187	85
		B_885SI71	B_885SM71	169	77	169	77	184	84
		B_885SI80	B_885SM80	177	80	177	80	192	87
		B_885SI90	B_885SM90	177	80	177	80	192	87
		B_885SI100	B_885SM100	178	81	178	81	193	88
	Integral Gearmotor (Hp)	B_883GH71C4	–	148	67	148	67	163	74
		B_883GH71D4		148	67	148	67	163	74
		B_883GH71E4		152	69	152	69	167	76
		B_883GH80F4		152	69	152	69	167	76
		B_883GH80G4		156	71	155	70	170	77
		B_883GH90H4		160	73	160	73	175	79
		B_883GH90I4		166	75	165	75	180	82
		B_883GH100J4		173	78	172	78	187	85
		B_883GH112L4		195	88	194	88	209	95
		B_883GH132M4		264	120	263	119	278	126
		B_883GH132N4		295	134	294	133	309	140
		B_884GH71C4		158	72	158	72	173	79
		B_884GH71D4		158	72	158	72	173	79
		B_884GH71E4		161	73	161	73	176	80
		B_884GH80F4		165	75	165	75	180	82
		B_884GH80G4		169	77	169	77	184	84
		B_884GH90H4		174	79	174	79	189	86
		B_885GH71C4		172	78	172	78	187	85

* Weights are approximate

All weights are shown without oil.

(L) – See footnotes page on the inside back cover

Weights – RHB 108

Unit size	Input configuration	Catalog number NEMA	Catalog number IEC	Output configuration: Foot mounted Weight (lbs) (L)	Foot mounted Weight (Kg) (L)	Flange mounted B14 Weight (lbs) (L)	B14 Weight (Kg) (L)	B5 Weight (lbs) (L)	B5 Weight (Kg) (L)
108	Clamp Collar	–	B_1083CI80D	255	116	262	119	284	129
		B_1083CN140TC	B_1083CI90D	255	116	262	119	284	129
		B_1083CN180TC	B_1083CI100D	257	117	264	120	286	130
		–	B_1083CI112D	261	118	268	122	290	132
		B_1083CN210TC	B_1083CI132D	275	125	281	127	303	137
		B_1083CN250TC	B_1083CI160D	296	134	303	137	325	147
		B_1083CN280TC	-	298	135	305	138	327	148
		B_1084CN56C	B_1084CI71D	270	122	277	136	299	136
		–	B_1084CI80D	274	124	281	127	303	137
		B_1084CN140TC	B_1084CI90D	274	124	281	127	303	137
		B_1084CN180TC	B_1084CI100D	280	127	287	130	309	140
		–	B_1084CI112D	281	127	288	131	310	141
		B_1085CN56C	B_1085CI71D	296	134	303	137	326	147
		–	B_1085CI80D	300	136	307	139	329	149
		B_1085CN140TC	B_1085CI90D	300	136	307	139	329	149
		B_1085CN180TC	B_1085CI100D	304	138	311	141	333	151
		–	B_1085CI112D	307	139	314	142	336	152
	3 Pc Coupled	–	B_1083LI80D	272	123	278	126	300	136
		B_1083LN140TC	B_1083LI90D	272	123	278	126	300	136
		B_1083LN180TC	B_1083LI100D	280	127	287	130	309	140
		–	B_1083LI112D	285	129	292	132	314	142
		B_1083LN210TC	B_1083LI132D	303	137	310	141	332	151
		B_1083LN250TC	B_1083LI160D	350	159	357	162	379	172
		B_1084LN56C	B_1084LI71D	279	127	286	130	308	140
		–	B_1084LI80D	291	132	298	135	320	145
		B_1084LN140TC	B_1084LI90D	291	132	298	135	320	145
		B_1084LN180TC	B_1084LI100D	297	135	304	138	326	148
		–	B_1084LI112D	305	138	312	142	334	152
		B_1085LN56C	B_1085LI71D	304	138	311	141	333	151
		–	B_1085LI80D	316	143	323	147	345	157
		B_1085LN140TC	B_1085LI90D	316	143	323	147	345	157
		B_1085LN180TC	B_1085LI100D	327	148	334	152	356	162
		–	B_1085LI112D	330	150	337	153	359	163
	Separate Group (Inch / Metric)	B_1083SI80	B_1083SM80	262	119	269	122	291	132
		B_1083SI90	B_1083SM90	262	119	269	122	291	132
		B_1083SI100	B_1083SM100	269	122	275	125	297	135
		B_1083SI112	B_1083SM112	273	124	280	127	302	137
		B_1083SI132	B_1083SM132	294	133	301	137	323	146
		B_1083SI160	B_1083SM160	317	144	323	146	345	156
		B_1084SI71	B_1084SM71	273	124	280	127	302	137
		B_1084SI80	B_1084SM80	282	128	289	131	311	141
		B_1084SI90	B_1084SM90	282	128	289	131	311	141
		B_1084SI100	B_1084SM100	288	131	295	134	317	144
		B_1084SI112	B_1084SM112	296	134	303	137	325	147
		B_1085SI71	B_1085SM71	303	137	310	141	332	151
		B_1085SI80	B_1085SM80	310	141	317	144	339	154
		B_1085SI90	B_1085SM90	311	141	318	144	340	154
		B_1085SI100	B_1085SM100	319	145	326	148	348	158
		B_1085SI112	B_1085SM112	324	147	331	150	353	160
	Integral Gearmotor (Hp)	B_1083GH80G4	–	266	121	273	124	295	134
		B_1083GH90H4		271	123	277	126	299	136
		B_1083GH90I4		276	125	283	128	305	138
		B_1083GH100J4		281	127	287	130	309	140
		B_1083GH112L4		304	138	311	141	333	151
		B_1083GH132M4		370	168	342	155	364	165
		B_1083GH132N4		401	182	408	185	430	195
		B_1084GH71C4		274	124	281	127	303	137
		B_1084GH71D4		274	124	281	127	303	137
		B_1084GH71E4		277	126	284	129	306	139
		B_1084GH80F4		281	127	288	131	310	141
		B_1084GH80G4		285	129	292	132	314	142
		B_1084GH90H4		290	132	297	135	319	145
		B_1084GH90I4		295	134	302	137	324	147
		B_1084GH100J4		304	138	311	141	333	151
		B_1085GH71C4		304	138	311	141	333	151
		B_1085GH71D4		304	138	311	141	333	151

* Weights are approximate

All weights are shown without oil.

(L) – See footnotes page on the inside back cover

Weights – RHB 128

Unit size	Input configuration	Catalog number NEMA	Catalog number IEC	Output configuration: Foot mounted Weight (lbs) (L)	Foot mounted Weight (Kg) (L)	Flange mounted B14 Weight (lbs) (L)	B14 Weight (Kg) (L)	B5 Weight (lbs) (L)	B5 Weight (Kg) (L)
128	Clamp Collar	B_1283CN140TC	B_1283CI90D	399	181	417	189	455	206
		B_1283CN180TC	B_1283CI100D	401	182	419	190	457	207
		–	B_1283CI112D	404	183	422	191	460	209
		B_1283CN210TC	B_1283CI132D	416	189	433	196	471	214
		B_1283CN250TC	B_1283CI160D	437	198	455	206	493	224
		B_1283CN280TC	B_1283CI180D	450	204	468	212	506	229
		–	B_1283CI200D	459	208	477	216	515	234
		B_1283CN320TC	-	453	206	471	214	509	231
		B_1284CN56C	B_1284CI71D	422	191	440	199	478	217
		–	B_1284CI80D	426	193	444	201	482	218
		B_1284CN140TC	B_1284CI90D	426	193	444	201	482	218
		B_1284CN180TC	B_1284CI100D	432	196	450	204	488	221
		–	B_1284CI112D	433	196	451	204	489	222
		B_1285CN56C	B_1285CI71D	448	203	466	211	504	228
		–	B_1285CI80D	452	205	470	213	508	230
		B_1285CN140TC	B_1285CI90D	452	205	470	213	508	230
		B_1285CN180TC	B_1285CI100D	456	207	474	215	512	232
		–	B_1285CI112D	459	208	477	216	515	233
	3 Pc Coupled	B_1283LN140TC	B_1283LI90D	415	188	433	196	471	214
		B_1283LN180TC	B_1283LI100D	424	192	442	200	480	218
		–	B_1283LI112D	428	194	445	202	483	219
		B_1283LN210TC	B_1283LI132D	444	201	462	210	500	227
		B_1283LN250TC	B_1283LI160D	491	223	508	230	546	248
		B_1283LN280TC	B_1283LI180D	540	245	558	253	596	270
		–	B_1283LI200D	553	251	571	259	609	276
		B_1284LN56C	B_1284LI71D	431	195	449	203	487	221
		–	B_1284LI80D	443	201	461	209	499	226
		B_1284LN140TC	B_1284LI90D	443	201	461	209	499	226
		B_1284LN180TC	B_1284LI100D	449	203	467	212	505	229
		–	B_1284LI112D	457	207	475	215	513	233
		B_1285LN56C	B_1285LI71D	456	207	474	215	512	232
		–	B_1285LI80D	468	212	486	220	524	238
		B_1285LN140TC	B_1285LI90D	468	212	486	220	524	238
		B_1285LN180TC	B_1285LI100D	479	217	497	225	535	242
		–	B_1285LI112D	482	218	500	227	538	244
	Separate Group (Inch / Metric)	B_1283SI90	B_1283SM90	406	184	424	192	462	210
		B_1283SI100	B_1283SM100	412	187	430	195	468	212
		B_1283SI112	B_1283SM112	416	189	433	196	471	214
		B_1283SI132	B_1283SM132	435	197	453	205	491	223
		B_1283SI160	B_1283SM160	457	207	475	215	513	233
		B_1283SI180	B_1283SM180	483	219	501	227	539	244
		B_1284SI71	B_1284SM71	425	193	443	201	481	218
		B_1284SI80	B_1284SM80	434	197	452	205	490	222
		B_1284SI90	B_1284SM90	434	197	452	205	490	222
		B_1284SI100	B_1284SM100	440	199	458	208	496	225
		B_1284SI112	B_1284SM112	448	203	466	211	504	228
		B_1285SI71	B_1285SM71	455	206	473	214	511	232
		B_1285SI80	B_1285SM80	462	209	480	218	518	235
		B_1285SI90	B_1285SM90	463	210	481	218	519	235
		B_1285SI100	B_1285SM100	471	213	489	222	527	239
		B_1285SI112	B_1285SM112	476	216	494	224	532	241
	Integral Gearmotor (Hp)	B_1283GH90H4	–	415	188	432	196	470	213
		B_1283GH90I4		420	190	438	199	476	216
		B_1283GH100J4		424	192	442	200	480	218
		B_1283GH112L4		447	203	465	211	503	228
		B_1283GH132M4		511	232	529	240	567	257
		B_1283GH132N4		542	246	559	254	597	271
		B_1284GH71C4		426	193	444	201	482	218
		B_1284GH71D4		426	193	444	201	482	218
		B_1284GH71E4		429	194	447	203	485	220
		B_1284GH80F4		433	196	451	204	489	222
		B_1284GH80G4		437	198	455	206	493	223
		B_1284GH90H4		442	200	460	208	498	226
		B_1284GH90I4		447	203	465	211	203	228
		B_1284GH100J4		456	207	474	215	512	232
		B_1284GH112L4		483	219	501	227	539	244
		B_1285GH71C4		456	207	474	215	512	232
		B_1285GH71D4		456	207	474	215	512	232
		B_1285GH71E4		460	208	478	217	516	234

* Weights are approximate

All weights are shown without oil.

(L) – See footnotes page on the inside back cover

Weights – RHB 148

Unit size	Input configuration	Catalog number NEMA	Catalog number IEC	Output configuration: Foot mounted Weight (lbs) (L)	Foot mounted Weight (Kg) (L)	Flange mounted B14 Weight (lbs) (L)	B14 Weight (Kg) (L)	B5 Weight (lbs) (L)	B5 Weight (Kg) (L)
148	Clamp Collar	B_1483CN180TC	B_1483CI100D	606	275	606	275	648	294
		–	B_1483CI112D	609	276	609	276	651	295
		B_1483CN210TC	B_1483CI132D	617	280	617	280	659	299
		B_1483CN250TC	B_1483CI160D	649	294	649	294	691	313
		B_1483CN280TC	B_1483CI180D	650	295	650	295	692	314
		–	B_1483CI200D	659	299	659	299	701	318
		B_1483CN320TC	–	680	308	704	319	746	338
		B_1483CN360TC	-	684	310	708	321	750	340
		B_1484CN56C	B_1484CI71D	625	283	625	283	667	302
		–	B_1484CI80D	629	285	629	285	671	304
		B_1484CN140TC	B_1484CI90D	629	285	629	285	671	304
		B_1484CN180TC	B_1484CI100D	634	287	634	287	676	306
		–	B_1484CI112D	636	288	636	288	678	307
		B_1484CN210TC	B_1484CI132D	650	295	650	295	692	314
		B_1485CN56C	B_1485CI71D	644	292	644	292	686	311
		–	B_1485CI80D	648	294	648	294	690	313
		B_1485CN140TC	B_1485CI90D	648	294	648	294	690	313
		B_1485CN180TC	B_1485CI100D	652	296	652	296	694	315
		–	B_1485CI112D	655	297	655	297	697	316
	3 Pc Coupled	B_1483LN180TC	B_1483LI100D	629	285	629	285	671	304
		–	B_1483LI112D	632	287	632	287	674	306
		B_1483LN210TC	B_1483LI132D	646	293	646	293	688	312
		B_1483LN250TC	B_1483LI160D	703	319	703	319	745	338
		B_1483LN280TC	B_1483LI180D	740	336	740	336	782	355
		–	B_1483LI200D	753	341	753	341	795	361
		B_1483LN320TC	B_1483LI225D	859	390	859	390	901	409
		B_1484LN56C	B_1484LI71D	633	287	633	287	675	306
		–	B_1484LI80D	645	292	645	292	687	311
		B_1484LN140TC	B_1484LI90D	645	292	645	292	687	311
		B_1484LN180TC	B_1484LI100D	652	296	652	296	694	315
		–	B_1484LI112D	660	299	660	299	702	318
		B_1484LN210TC	B_1484LI132D	668	303	668	303	710	322
		B_1485LN56C	B_1485LI71D	652	296	652	296	694	315
		–	B_1485LI80D	664	301	664	301	706	320
		B_1485LN140TC	B_1485LI90D	664	301	664	301	706	320
		B_1485LN180TC	B_1485LI100D	675	306	675	306	717	325
		–	B_14856I112D	678	307	678	307	720	326
	Separate Group (Inch / Metric)	B_1483SI100	B_1483SM100	618	280	618	280	660	299
		B_1483SI112	B_1483SM112	620	281	620	281	662	300
		B_1483SI132	B_1483SM132	637	289	637	289	679	308
		B_1483SI160	B_1483SM160	669	303	669	303	711	322
		B_1483SI180	B_1483SM180	683	310	683	310	725	329
		B_1483SI225	B_1483SM225	746	338	746	338	788	357
		B_1484SI71	B_1484SM71	628	285	628	285	670	304
		B_1484SI80	B_1484SM80	637	289	637	289	679	308
		B_1484SI90	B_1484SM90	637	289	637	289	679	308
		B_1484SI100	B_1484SM100	643	292	643	292	685	311
		B_1484SI112	B_1484SM112	651	295	651	295	693	314
		B_1484SI132	B_1484SM132	669	303	669	303	711	322
		B_1485SI71	B_1485SM71	651	295	651	295	693	314
		B_1485SI80	B_1485SM80	658	298	658	298	700	317
		B_1485SI90	B_1485SM90	659	299	659	299	701	318
		B_1485SI100	B_1485SM100	667	302	667	302	709	321
		B_1485SI112	B_1485SM112	672	305	672	305	714	324
	Integral Gearmotor (Hp)	B_1483GH100J4		630	286	654	297	696	316
		B_1483GH112L4		652	296	676	307	718	326
		B_1483GH132M4		713	323	737	334	779	353
		B_1483GH132N4		744	337	768	348	810	367
		B_1484GH71C4		629	285	629	285	671	304
		B_1484GH71D4		629	285	629	285	671	304
		B_1484GH71E4		632	287	632	287	674	306
		B_1484GH80F4		636	288	636	288	678	307
		B_1484GH80G4	–	640	290	640	290	682	309
		B_1484GH80H4		645	292	645	292	687	311
		B_1484GH90I4		650	295	650	295	692	314
		B_1484GH100J4		659	299	659	299	701	318
		B_1484GH112L4		686	311	686	311	728	330
		B_1485GH71C4		652	296	652	296	694	315
		B_1485GH71D4		652	296	652	296	694	315
		B_1485GH71E4		656	297	656	297	698	316
		B_1485GH80F4		656	297	656	297	698	316

* Weights are approximate

All weights are shown without oil.

(L) – See footnotes page on the inside back cover

Weights – RHB 168

Unit size	Input configuration	Catalog number NEMA	Catalog number IEC	Output configuration: Foot mounted Weight (lbs) (L)	Foot mounted Weight (Kg) (L)	Flange mounted B14 Weight (lbs) (L)	B14 Weight (Kg) (L)	B5 Weight (lbs) (L)	B5 Weight (Kg) (L)
168	Clamp Collar	B_1683CN210TC	B_1683CI132D	995	451	1023	464	1094	496
		B_1683CN250TC	B_1683CI160D	1015	460	1043	473	1114	505
		B_1683CN280TC	B_1683CI180D	1026	465	1054	478	1125	510
		–	B_1683CI200D	1035	469	1063	482	1134	514
		B_1683CN320TC	–	1049	476	1077	488	1148	521
		B_1683CN360TC	–	1099	498	1127	511	1198	543
		B_1684CN56C	B_1684CI71D	997	452	1025	465	1096	497
		–	B_1684CI80D	1001	454	1029	467	1100	499
		B_1684CN140TC	B_1684CI90D	1001	454	1029	467	1100	499
		B_1684CN180TC	B_1684CI100D	1006	456	1034	469	1105	501
		–	B_1684CI112D	1008	457	1036	470	1107	502
		B_1684CN210TC	B_1684CI132D	1022	464	1050	476	1121	508
		B_1685CN56C	B_1685CI71D	1038	471	1066	484	1137	516
		–	B_1685CI80D	1042	473	1070	485	1141	518
		B_1685CN140TC	B_1685CI90D	1042	473	1070	485	1141	518
		B_1685CN180TC	B_1685CI100D	1047	475	1075	488	1146	520
		–	B_1685CI112D	1049	476	1077	489	1148	521
		B_1685CN210TC	B_1685CI132D	1063	482	1091	495	1162	527
	3 Pc Coupled	B_1683LN210TC	B_1683LI132D	1024	464	1051	477	1122	509
		B_1683LN250TC	B_1683LI160D	1069	485	1096	497	1167	529
		B_1683LN280TC	B_1683LI180D	1116	506	1144	519	1215	551
		–	B_1683LI200D	1129	512	1157	525	1228	557
		B_1683LN320TC	B_1683LI225D	1228	557	1256	570	1327	602
		B_1683LN360TC	B_1683LI250D	1306	592	1334	605	1405	637
		B_1684LN56C	B_1684LI71D	1005	456	1033	469	1104	501
		–	B_1684LI80D	1017	461	1045	474	1116	506
		B_1684LN140TC	B_1684LI90D	1017	461	1045	474	1116	506
		B_1684LN180TC	B_1684LI100D	1024	464	1052	477	1123	509
		–	B_1684LI112D	1032	468	1060	481	1131	513
		B_1684LN210TC	B_1684LI132D	1040	472	1068	484	1139	517
		B_1685LN56C	B_1685LI71D	1046	474	1074	487	1145	519
		–	B_1685LI80D	1059	480	1087	493	1158	525
		B_1685LN140TC	B_1685LI90D	1070	485	1098	498	1169	530
		B_1685LN180TC	B_1685LI100D	1073	487	1101	499	1172	532
		–	B_1685LI112D	1092	495	1120	508	1191	540
		B_1685LN210TC	B_1685LI132D	1089	476	1077	489	1148	521
	Separate Group (Inch / Metric)	B_1683SI132	B_1683SM132	1015	460	1042	473	1113	505
		B_1683SI160	B_1683SM160	1035	469	1063	482	1134	514
		B_1683SI180	B_1683SM180	1059	480	1087	493	1158	525
		B_1683SI225	B_1683SM225	1115	506	1143	518	1214	551
		B_1683SI250	B_1683SM250	1133	514	1161	527	1232	559
		B_1684SI71	B_1684SM71	1000	454	1028	466	1099	498
		B_1684SI80	B_1684SM80	1009	458	1037	470	1108	503
		B_1684SI90	B_1684SM90	1009	458	1037	470	1108	503
		B_1684SI100	B_1684SM100	1015	460	1043	473	1114	505
		B_1684SI112	B_1684SM112	1023	464	1051	477	1122	509
		B_1864SI132	B_1684DM132	1041	472	1069	485	1140	517
		B_1685SI71	B_1685SM71	1047	475	1075	488	1146	520
		B_1685SI80	B_1685SM80	1055	479	1083	491	1154	523
		B_1685SI90	B_1685SM90	1055	479	1083	491	1154	523
		B_1685SI100	B_1685SM100	1064	483	1092	495	1163	528
		B_1685SI112	B_1685SM112	1067	484	1095	497	1166	529
		B_1685SI132	B_1685SM132	1088	494	1116	506	1187	538
	Integral Gearmotor (Hp)	B_1683GH132M4	–	1090	494	1118	507	1189	539
		B_1683GH132N4		1121	508	1149	521	1220	553
		B_1684GH71C4		1001	454	1029	467	1100	499
		B_1684GH71D4		1001	454	1029	467	1100	499
		B_1684GH71E4		1004	455	1032	468	1103	500
		B_1684GH80F4		1008	457	1036	470	1107	502
		B_1684GH80G4		1012	459	1040	472	1111	504
		B_1684GH80H4		1017	461	1045	474	1116	506
		B_1684GH90I4		1022	464	1050	476	1121	508
		B_1684GH100J4		1031	468	1059	480	1130	513
		B_1684GH112L4		1058	480	1086	493	1157	525
		B_1684GH132M4		1088	494	1116	506	1185	538
		B_1685GH71C4		1046	474	1074	487	1145	519
		B_1685GH71D4		1046	474	1074	487	1145	519
		B_1685GH71E4		1050	476	1078	489	1149	521
		B_1685GH80F4		1050	476	1078	489	1149	521
		B_1685GH80G4		1053	478	1081	490	1152	523
		B_1685GH80H4		1058	480	1086	493	1157	525

* Weights are approximate

All weights are shown without oil.

(L) – See footnotes page on the inside back cover

Notes

Motorized Shaft Mount (MSM)

MSM Table of Contents

MSM-2	**Nomenclature**
MSM-4	**Mounting Positions and Oil Quantities**
MSM-10	**Overhung Loads**
MSM-12	**MSM Selection - 60 Hz**
MSM-12	MSM 38
MSM-16	MSM 48
MSM-20	MSM 58
MSM-28	MSM 68
MSM-37	MSM 88
MSM-46	MSM 108
MSM-55	MSM 128
MSM-63	MSM 148
MSM-73	MSM 168
MSM-80	**MSM Integral Gearmotors - 60 Hz**
MSM-137	**MSM Dimensions Outline**
MSM-138	**MSM Dimensions Outline**
MSM-139	**Dimensions**
MSM-187	Optional shaft dimensions
MSM-189	Twin-tapered bushings
MSM-194	Screw conveyor adapter
MSM-196	Metric shrink disk
MSM-197	Q-Loc bushing dimensions
MSM-198	**Thermal Ratings**
MSM-207	**Weights**

Nomenclature

Motorized shaft mount (MSM)

Double, triple, four- and five-stage reduction

	1	2	3	4	5	6	7	/	8	9	9a	10	10a	10b	11	11a	11b	12	13	13a	13b	14
Ex:	M	W	68	4	C	N	140TC	/	646.86	A1	–	H	I	1.50	B14	150 mm	A	B	–	–	–	
Ex:	M	W	38	3	G	H	80F4	/	9.72	A1	A	S	I	1	B5	160 mm	A	–	–	–	–	D6
Ex:	M	W	88	3	S	I	90	/	5.54	A4	–	T	I	1.9375	–	–	–	B	–	–	–	

1. Product type
M = MSM

2. Output configuration
W = Universal mounting

3. Unit size
38 48 58 68 88
108 128 148 168

4. Stage of reduction
2 = Double reduction
3 = Triple reduction
4 = 4 stage reduction
5 = 5 stage reduction

5. Input configuration
C = Clamp collar
L = 3 pc coupling
S = Separate
G = Integral gearmotor

6. Motor type
N = Nema C–face
I = IEC C–face
H = Integral Hp
K = Integral kW

Separate input
I = Inch
M = Metric

7. Motor frame
NEMA C–face
56C 140TC 180TC 210TC
250TC 280TC 320TC 360TC

IEC C–face
71D 80D 90D 100D 112D 132D
160D 180D 200D 225D 250D

Separate
71 80 90 100 112
132 160 180 225 250

Integral gearmotor

71C4	.25 Hp	112L4	5 Hp
71D4	.33 Hp	132M4	7.5 Hp
71E4	.50 Hp	132N4	10 Hp
80F4	.75 Hp	160P4	15 Hp
80G4	1 Hp	160Q4	20 Hp
90H4	1.5 Hp	180R4	25 Hp
90I4	2 Hp	180S4	30 Hp
100J4	3 Hp	200T4	40 Hp

8. Ratio **(use actual ratio from selection pages)**

9. Mounting positions **(see page MSM-4 through MSM-9)**
A1 A2 A3
A4 A5 A6

10. Output shaft type
S = Single extension solid shaft
H = Straight hollow bore
T = Tapered hollow bore
C = Shrink disk
Q = Q-Loc keyless bushing

10a. Output shaft dimension
I = Inch
M = Metric

MSM

Double, triple, four- and five-stage reduction

	1	2	3	4	5	6	7	/	8	9	9a	10	10a	10b	11	11a	11b	12	13	13a	13b	14
Ex:	M	W	68	4	C	N	140TC	/	646.86	A1	–	H	I	1.50	B14	150 mm	A	B	–	–	–	
Ex:	M	W	38	3	G	H	80F4	/	9.72	A1	A	S	I	1	B5	160 mm	A	–	–	–	–	D6
Ex:	M	W	88	3	S	I	90	/	5.54	A4	–	T	I	1.9375	–	–	–	B	–	–	–	

10b. Output shaft diameter

Single extension solid shaft

	Std	Optional	Std	Optional
MSM 38	1.000”	1.375”	25 mm	35 mm
MSM 48	1.250”	1.625”	30 mm	40 mm
MSM 58	1.375”	–	35 mm	–
MSM 68	1.625”	2.000”	40 mm	50 mm
MSM 88	2.000”	2.750”	50 mm	70 mm
MSM 108	2.375”	3.1875”	60 mm	80 mm
MSM 128	2.875”	3.625”	70 mm	90 mm
MSM 148	3.625”	4.000”	90 mm	100 mm
MSM 168	4.375”	4.750”	110 mm	120 mm

Straight hollow bore

	Std	Optional	Std	Optional
MSM 38	1.250”	–	30 mm	–
MSM 48	1.375”	–	35 mm	–
MSM 58	1.500”	1.4375”	40 mm	–
MSM 68	1.500”	1.4375”	40 mm	45 mm
MSM 88	2.000”	1.9375”	50 mm	60 mm
MSM 108	2.375”	2.4375”	60 mm	70 mm
MSM 128	2.750”	2.9375”	70 mm	80 mm
MSM 148	3.625”	3.4375”	80 mm	90 mm
MSM 168	4.000”	3.9375”	100 mm	110 mm

Shrink disk

MSM 38	30 mm	MSM 108	70 mm	70 mm
MSM 48	40 mm	MSM 128	80 mm	80 mm
MSM 68	50 mm	MSM 148	95 mm	95 mm
MSM 88	60 mm	MSM 168	105 mm	105 mm

Tapered hollow bore
(see pages MSM–171 through MSM–175)

For Q-Loc see page MSM-179

11. Output flange type

B5
B14 (std)

11a. Output flange diameter

	B5 flange	B14 flange
MSM 38	160 mm	120 mm
MSM 48	200 mm	132 mm
MSM 58	250 mm	150 mm
MSM 68	250 mm	150 mm
MSM 88	300 mm	190 mm
MSM 108	350 mm	245 mm
MSM 128	450 mm	295 mm
MSM 148	450 mm	335 mm
MSM 168	550 mm	400 mm

11b. Output flange position

A

12. Torque-Arm option

B = Rubber bushing

13. Screw conveyor drive

(MSM 38 – 128 – MW style housing)

SCS = Screw conveyor with drive ahaft
SCN = Screw conveyor – no drive shaft

13a. Screw conveyor drive shaft diameter

MSM 38	1.500”			
MSM 48	1.500”	2.000”		
MSM 58	1.500”	2.000”		
MSM 68	1.500”	2.000”	2.4375”	
MSM 88	2.000”	2.4375”	3.000”	
MSM 108	2.000”	2.4375”	3.000”	
MSM 128	2.000”	2.4375”	3.000”	3.4375”

13b. Screw conveyor adapter

S = Standard
XT = Harsh duty

14. Integral motor brake options

See page ENG-23

Mounting Positions and Oil Quantities

Motorized shaft mount (MSM) C-face reducers and integral gearmotors

These mounting arrangements are for all output configurations and output shaft types. **Important! When ordering, please specify mounting position for correct oil quantity.** In cases of mounting position other than shown here with regard to the oil quantity, please reference the Incline Mounting page, INTRO-24, and contact Application Engineering.

NOTE: The oil volumes shown are approximate values and cannot be used to correctly set the reducer oil level - **ALWAYS** fill the reducer to the correct oil level plug and recheck in 1 week.

A1

Unit size	Reduction stage	Pints	Liters
38	2	3.2	1.5
	3	3.2	1.5
48	2	4.2	2.0
	3	4.2	2.0
58	2	5.7	2.7
	3	5.7	2.7
68	2	9.5	4.5
	3	9.3	4.4
88	2	18.4	8.7
	3	18.4	8.7
108	2	30.4	14.4
	3	29.4	13.9
128	2	58.5	27.7
	3	57.3	27.1
148	2	84.1	39.8
	3	82.2	38.9
168	2	138.8	63.3
	3	131.0	62.0

Oil level Ventilation Oil drain

A1

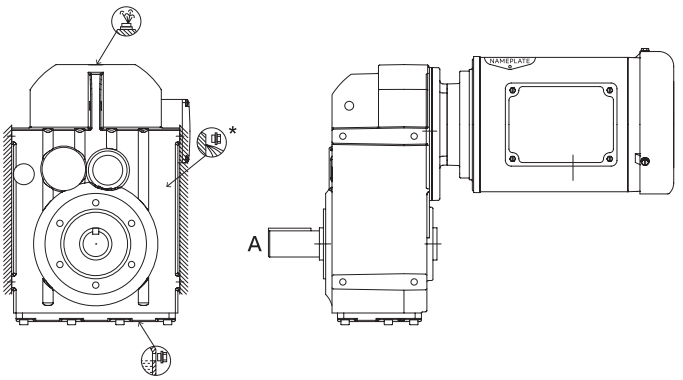

A1

Unit size	Reduction stage	Input reducer pints	Input reducer liters	Primary reducer pints	Primary reducer liters
68	4	0.3	0.2	9.8	4.6
	5	1.1	0.5	9.8	4.6
88	4	0.5	0.3	18.2	8.6
	5	2.3	1.1	18.2	8.6
108	4	0.5	0.3	31.3	14.8
	5	2.3	1.1	31.3	14.8
128	4	1.1	0.5	56.1	26.6
	5	2.3	1.1	56.1	26.6
148	4	1.1	0.5	83.7	39.6
	5	2.3	1.1	83.7	39.6
168	4	1.1	0.5	128.8	61.0
	5	3.8	1.8	128.8	61.0

A1

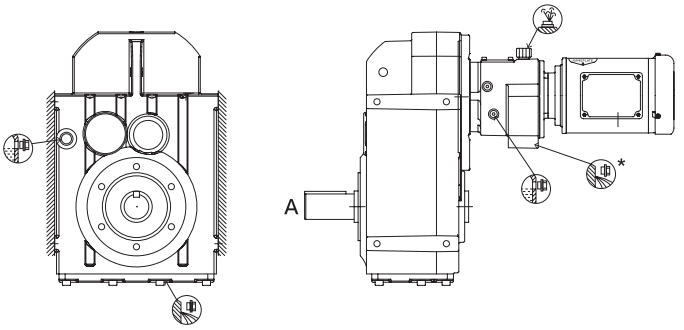

Notes: All MSM 38 units are sealed for life and furnished with only one plug for filling and draining.

Four- and five-stage reduction reducer consists of two reducers assembled to each other, the Input Reducer and the Primary Reducer. The reducers are sealed from each other and require different oil levels per the chart.

* Hole location on opposite side of reducer.

For size 48 MSM, fill to the plug on the output side of the housing.

MSM mounting positions and oil quantities

C-face reducers and integral gearmotors

These mounting arrangements are for all output configurations and output shaft types. **Important! When ordering, please specify mounting position for correct oil quantity.** In cases of mounting position other than shown here with regard to the oil quantity, please reference the Incline Mounting page, INTRO-24, and contact Application Engineering.

NOTE: The oil volumes shown are approximate values and cannot be used to correctly set the reducer oil level - **ALWAYS** fill the reducer to the correct oil level plug and recheck in 1 week.

A2

Unit size	Reduction stage	Pints	Liters
38	2	4.2	2.0
	3	4.2	2.0
48	2	6.1	2.9
	3	6.1	2.9
58	2	8.5	4.0
	3	8.5	4.0
68	2	12.3	5.8
	3	12.0	5.7
88	2	24.7	11.7
	3	24.1	11.4
108	2	40.4	19.1
	3	39.7	18.8
128	2	71.9	34.0
	3	73.1	34.6
148	2	103.6	49.0
	3	104.4	49.4
168	2	148.1	70.1
	3	149.2	70.6

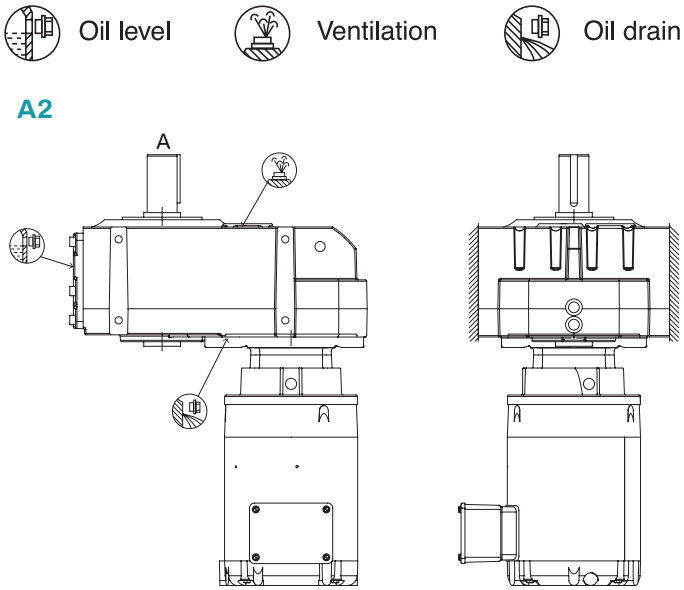

A2

Unit size	Reduction stage	Input reducer pints	Input reducer liters	Primary reducer pints	Primary reducer liters
68	4	1.2	0.6	11.4	5.4
	5	2.5	1.2	11.4	5.4
88	4	2.2	1.1	25.0	11.8
	5	5.1	2.4	25.0	11.8
108	4	2.2	1.1	36.8	17.4
	5	5.1	2.4	36.8	17.4
128	4	3.9	1.9	69.8	33.0
	5	5.1	2.4	69.8	33.0
148	4	3.9	1.9	100.0	47.3
	5	5.1	2.4	100.0	47.3
168	4	3.9	1.9	139.3	65.9
	5	8.7	4.0	139.3	65.9

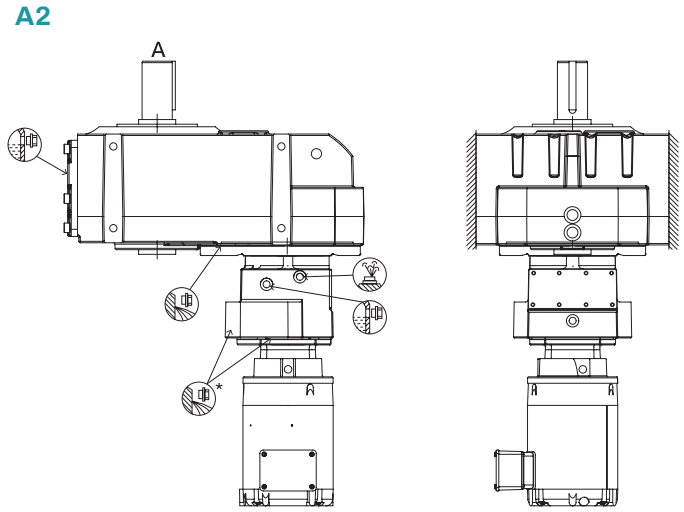

Notes: All MSM 38 units are sealed for life and furnished with only one plug for filling and draining.

Four- and five-stage reduction reducer consists of two reducers assembled to each other, the Input Reducer and the Primary Reducer. The reducers are sealed from each other and require different oil levels per the chart.

* Hole location on opposite side of reducer.

A2 mounting position is not a recommended mounting position due for continuous duty applications to the weight of the oil on the high speed input seal. A2 is also not recommended for input speeds above 1750 rpm. A2 can be used for intermittent duty applications.

MSM mounting positions and oil quantities

C-face reducers and integral gearmotors

These mounting arrangements are for all output configurations and output shaft types. **Important! When ordering, please specify mounting position for correct oil quantity.** In cases of mounting position other than shown here with regard to the oil quantity, please reference the Incline Mounting page, INTRO-24, and contact Application Engineering.

NOTE: The oil volumes shown are approximate values and cannot be used to correctly set the reducer oil level - **ALWAYS** fill the reducer to the correct oil level plug and recheck in 1 week.

A3

Unit size	Reduction stage	Pints	Liters
38	2	1.7	0.8
	3	1.7	0.8
48	2	3.0	1.4
	3	3.2	1.5
58	2	4.6	2.2
	3	4.8	2.3
68	2	5.9	2.8
	3	6.1	2.9
88	2	14.2	6.7
	3	13.7	6.5
108	2	18.8	8.9
	3	19.2	9.1
128	2	30.0	14.2
	3	31.5	14.9
148	2	46.1	21.8
	3	47.1	22.3
168	2	67.8	32.1
	3	69.1	32.7

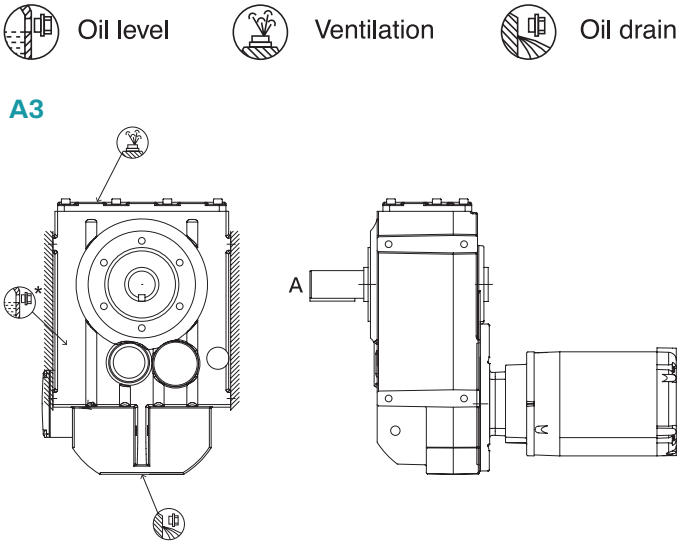

A3

Unit size	Reduction stage	Input reducer pints	Input reducer liters	Primary reducer pints	Primary reducer liters
68	4	0.8	0.4	6.6	3.1
	5	1.3	0.6	6.6	3.1
88	4	1.5	0.7	13.6	6.4
	5	3.2	1.5	13.6	6.4
108	4	1.5	0.7	18.7	8.8
	5	3.2	1.5	18.7	8.8
128	4	3.1	1.5	31.0	14.7
	5	3.2	1.5	31.0	14.7
148	4	3.1	1.5	46.9	22.2
	5	3.2	1.5	46.9	22.2
168	4	3.1	1.5	68.5	32.4
	5	5.3	2.5	68.5	32.4

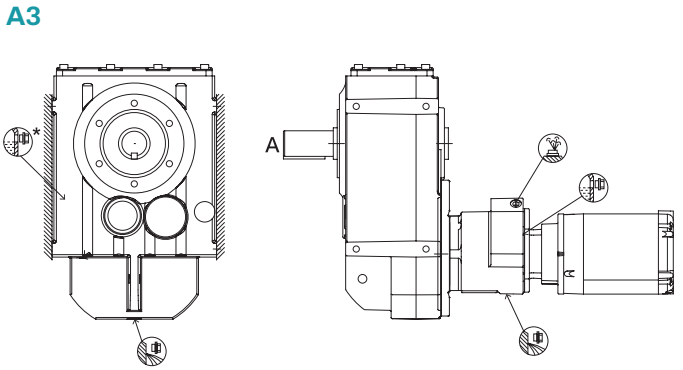

Notes: All MSM 38 units are sealed for life and furnished with only one plug for filling and draining

Four- and five-stage reduction reducer consists of two reducers assembled to each other, the Input Reducer and the Primary Reducer. The reducers are sealed from each other and require different oil levels per the chart.

* Hole location on opposite side of reducer.

MSM mounting positions and oil quantities

C-face reducers and integral gearmotors

These mounting arrangements are for all output configurations and output shaft types. **Important! When ordering, please specify mounting position for correct oil quantity.** In cases of mounting position other than shown here with regard to the oil quantity, please reference the Incline Mounting page, INTRO-24, and contact Application Engineering.

NOTE: The oil volumes shown are approximate values and cannot be used to correctly set the reducer oil level - **ALWAYS** fill the reducer to the correct oil level plug and recheck in 1 week.

A4

Unit size	Reduction stage	Pints	Liters
38	2	3.6	1.7
	3	4.2	2.0
48	2	6.3	3.0
	3	6.1	2.9
58	2	8.6	4.1
	3	8.6	4.1
68	2	10.1	4.8
	3	13.5	6.4
88	2	21.8	10.3
	3	26.6	12.6
108	2	31.7	15.0
	3	39.9	18.9
128	2	58.5	27.7
	3	72.9	34.5
148	2	90.9	43.0
	3	101.1	51.6
168	2	139.3	65.9
	3	168.4	79.7

Oil level Ventilation Oil drain

A4

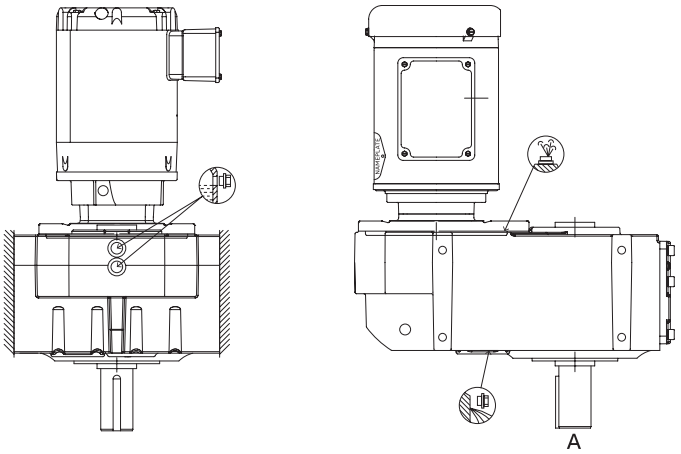

A4

Unit size	Reduction stage	Input reducer pints	Input reducer liters	Primary reducer pints	Primary reducer liters
68	4	1.0	0.5	13.8	6.5
	5	1.5	0.7	13.8	6.5
88	4	1.5	0.7	25.5	12.1
	5	3.8	1.8	25.5	12.1
108	4	1.5	0.7	42.2	20.0
	5	3.8	1.8	42.2	20.0
128	4	3.7	1.8	71.4	33.8
	5	3.8	1.8	71.4	33.8
148	4	3.7	1.8	109.2	51.7
	5	3.8	1.8	109.2	51.7
168	4	3.7	1.8	167.1	79.1
	5	6.8	3.2	167.1	79.1

A4

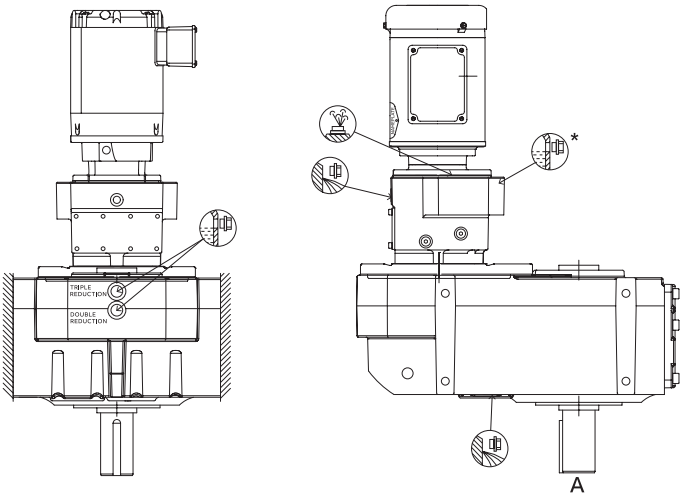

Notes: All MSM 38 units are sealed for life and furnished with only one plug for filling and draining

Four- and five-stage reduction reducer consists of two reducers assembled to each other, the Input Reducer and the Primary Reducer. The reducers are sealed from each other and require different oil levels per the chart.

* Hole location on opposite side of reducer.

MSM mounting positions and oil quantities

C-face reducers and integral gearmotors

These mounting arrangements are for all output configurations and output shaft types. **Important! When ordering, please specify mounting position for correct oil quantity.** In cases of mounting position other than shown here with regard to the oil quantity, please reference the Incline Mounting page, INTRO-24, and contact Application Engineering.

NOTE: The oil volumes shown are approximate values and cannot be used to correctly set the reducer oil level - **ALWAYS** fill the reducer to the correct oil level plug and recheck in 1 week.

A5

Unit size	Reduction stage	Pints	Liters
38	2	2.5	1.2
	3	2.5	1.2
48	2	3.8	1.8
	3	3.8	1.8
58	2	5.9	2.8
	3	5.5	2.6
68	2	8.0	3.8
	3	7.8	3.7
88	2	16.9	8.0
	3	16.3	7.7
108	2	25.4	12.0
	3	24.7	11.7
128	2	45.6	21.6
	3	45.0	21.3
148	2	67.0	31.7
	3	65.9	31.2
168	2	104.0	49.2
	3	102.3	48.4

Oil level Ventilation Oil drain

A5

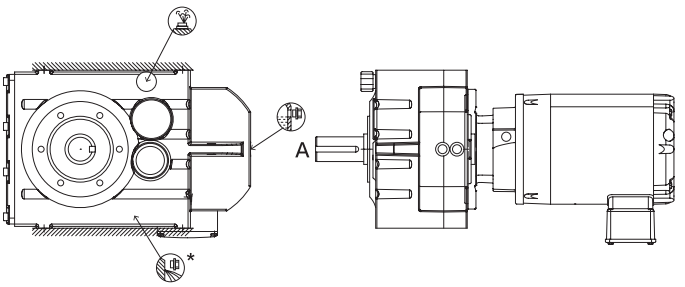

A5

Unit size	Reduction stage	Input reducer pints	Input reducer liters	Primary reducer pints	Primary reducer liters
68	4	0.5	0.3	9.9	4.7
	5	1.3	0.6	9.9	4.7
88	4	1.2	0.6	21.6	10.2
	5	3.4	1.6	21.6	10.2
108	4	1.2	0.6	33.3	15.8
	5	3.4	1.6	33.3	15.8
128	4	2.1	1.0	54.8	25.9
	5	3.4	1.6	54.8	25.9
148	4	2.1	1.0	83.5	39.5
	5	3.4	1.6	83.5	39.5
168	4	2.1	1.0	122.4	57.9
	5	5.7	2.7	122.4	57.9

A5

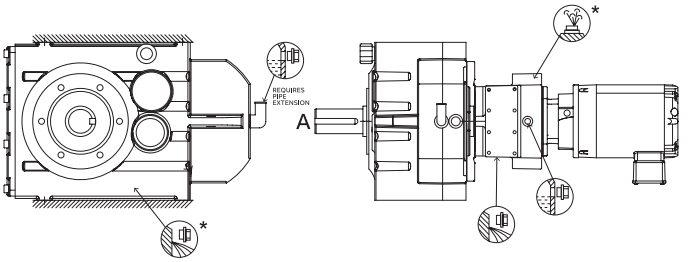

Notes: All MSM 38 units are sealed for life and furnished with only one plug for filling and draining

Four- and five-stage reduction reducer consists of two reducers assembled to each other, the Input Reducer and the Primary Reducer. The reducers are sealed from each other and require different oil levels per the chart.

* Hole location on opposite side of reducer.

MSM mounting positions and oil quantities

C-face reducers and integral gearmotors

These mounting arrangements are for all output configurations and output shaft types. **Important! When ordering, please specify mounting position for correct oil quantity.** In cases of mounting position other than shown here with regard to the oil quantity, please reference the Incline Mounting page, INTRO-24, and contact Application Engineering.

NOTE: The oil volumes shown are approximate values and cannot be used to correctly set the reducer oil level - **ALWAYS** fill the reducer to the correct oil level plug and recheck in 1 week.

A6

Unit size	Reduction stage	Pints	Liters
38	2	2.5	1.2
	3	2.5	1.2
48	2	3.8	1.8
	3	3.8	1.8
58	2	5.9	2.8
	3	5.5	2.6
68	2	8.0	3.8
	3	7.8	3.7
88	2	16.9	8.0
	3	16.3	7.7
108	2	25.4	12.0
	3	24.7	11.7
128	2	45.6	21.6
	3	45.0	21.3
148	2	67.0	31.7
	3	65.9	31.2
168	2	104.0	49.2
	3	102.3	48.4

Oil level Ventilation Oil drain

A6

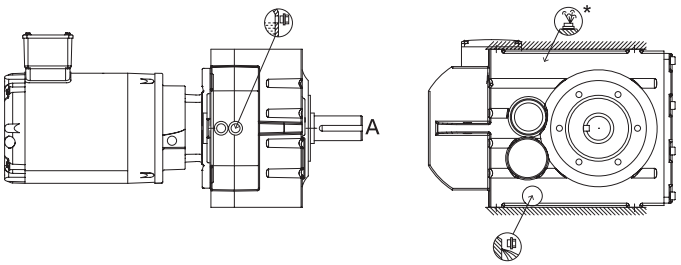

A6

Unit size	Reduction stage	Input reducer pints	Input reducer liters	Primary reducer pints	Primary reducer liters
68	4	0.5	0.3	9.5	4.5
	5	1.3	0.6	9.5	4.5
88	4	1.0	0.5	18.4	8.7
	5	2.7	1.3	18.4	8.7
108	4	1.0	0.5	28.9	13.7
	5	2.7	1.3	28.9	13.7
128	4	2.2	1.1	48.3	22.9
	5	2.7	1.3	48.3	22.9
148	4	2.2	1.1	70.7	33.5
	5	2.7	1.3	70.7	33.5
168	4	2.2	1.1	105.6	50.0
	5	4.9	2.3	105.6	50.0

A6

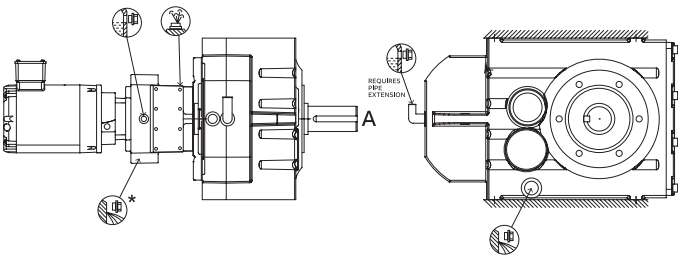

Notes: All MSM 38 units are sealed for life and furnished with only one plug for filling and draining

Four- and five-stage reduction reducer consists of two reducers assembled to each other, the Input Reducer and the Primary Reducer. The reducers are sealed from each other and require different oil levels per the chart.

* Hole location on opposite side of reducer.

Overhung Loads

MSM – solid output shaft

Permissible overhung loads at service factor SF = 1.0

1. Calculation based on bearing life

$$F_x \text{ perm.}_1 = F_R \text{ perm} \quad \frac{y}{z + X} \quad [lb_f]$$

2. Calculation based on mechanical strength

$$F_x \text{ perm.}_2 = \frac{a}{X} \quad [lb_f]$$

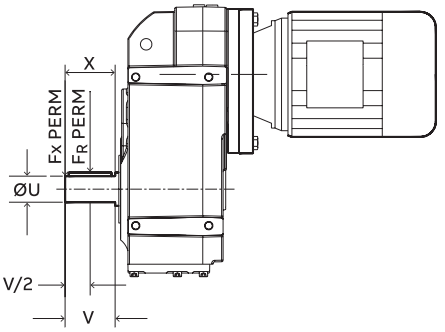

The data in the table below lists the permissible output shaft overhung load (OHL) when the load is located at mid shaft. To calculate the permissible OHL when the load is located at other positions, use the formulas above along with the data below.

Both equations 1 and 2 must be used to determine if the bearing or shaft strength limits the OHL. Limit the OHL to the lower of the 2 calculations.

Type stages	y in/mm	z in/mm	a Lb–in / kNmm	u in/mm	v in/mm	* in/mm	F_R perm. in (lbf) for x=u for output speeds n_2 in RPM							
							$n_2 \leq 16$	$n_2 \leq 25$	$n_2 \leq 40$	$n_2 \leq 63$	$n_2 \leq 100$	$n_2 \leq 160$	$n_2 \leq 250$	$n_2 \leq 263$
MW38 (2–5)	**4.80**	**3.82**	**947**	**1.00**	**1.97**	ccw	2508	2203	1922	1690	1486	1219	1011	990
	122	97	107	25	50	cw	1720	1414	1137	906	706	704	678	673
	5.2	3.82	1328	1.375	2.76	ccw	2292	2008	1757	1543	1359	1111	923	904
	132	97	150	35	70	cw	1589	1306	1055	845	661	653	626	622
MW48 (2–5)	**5.94**	**4.76**	**1575**	**1.25**	**2.36**	ccw	3554	3123	2726	2359	2058	1676	1395	1368
	151	121	178	30	60	cw	2466	2033	1643	1393	1135	1098	1025	1015
	6.34	4.76	2098	1.625	3.15	ccw	3330	2925	2554	2210	1931	1573	1309	1284
	161	121	237	40	80	cw	2311	1905	1541	1306	1063	1030	961	952
MW58 (2–5)	**6.69**	**5.31**	**3036**	**1.375**	**2.76**	ccw	7470	6660	5858	5130	4320	3690	3105	2813
	170	135	343	35	70	cw	6000	5250	4425	3900	3450	2925	2475	2250
MW68 (2–5)	**7.48**	**5.91**	**3939**	**1.625**	**3.15**	ccw	8104	7158	6303	5571	4923	4157	3551	3484
	190	150	445	40	80	cw	6480	5546	4676	3951	3310	3083	2859	2831
	7.87	5.91	4549	2.000	3.94	ccw	7308	6767	5959	5264	4649	3926	3349	3297
	200	150	514	50	100	cw	6122	5237	4417	3733	3127	2913	2701	2674
MW88 (2–5)	**8.86**	**6.89**	**7107**	**2.000**	**3.94**	ccw	13366	11792	10348	9143	7992	6751	5797	5698
	225	175	803	50	100	cw	11084	9522	8088	6867	5923	5465	4966	4911
	9.65	6.89	9949	2.750	5.51	ccw	12167	10762	9443	8331	7280	6161	5283	5201
	245	175	1124	70	140	cw	10106	8679	7372	6258	5396	4979	4527	4474
MW108 (2–5)	**10.31**	**7.95**	**12834**	**2.375**	**4.72**	ccw	16860	14953	13128	11640	10295	8637	7362	7220
	262	202	1450	60	120	cw	13134	11179	9404	7907	6570	6263	5826	5774
	11.1	7.95	17109	3.188	6.69	ccw	15584	13771	12140	10734	9502	7981	6795	6665
	282	202	1933	80	170	cw	12127	10321	8679	7289	6064	5779	5385	5328
MW128 (2–5)	**12.99**	**10.24**	**18676**	**2.875**	**5.51**	ccw	27975	24731	21737	19230	16717	14092	12044	11826
	330	260	2110	70	140	cw	21979	18726	15758	13273	11640	10886	10005	9897
	13.78	10.24	24013	3.625	6.69	ccw	26267	23211	20436	18063	15695	13214	11321	11113
	350	260	2713	90	170	cw	20642	17590	14810	12480	10935	10227	9398	9297
MW148 (2–5)	**15.67**	**12.13**	**40670**	**3.625**	**6.69**	ccw	28476	25250	22233	19713	16803	14154	12113	11905
	398	308	4595	90	170	cw	21163	17937	14950	12456	11519	10832	9964	9860
	16.06	12.13	40759	4.000	8.27	ccw	27707	24560	21676	19195	16369	13799	11799	11574
	408	308	4605	100	210	cw	20605	17462	14556	12125	11209	10533	9699	9600
MW168 (2–5)	**18.56**	**14.23**	**87625**	**4.375**	**8.27**	ccw	42430	37507	32961	29178	25137	21159	18171	17833
	472	362	9900	110	210	cw	33029	28157	23685	19910	17897	16653	15239	15070
	18.98	14.23	63656	4.75	8.27	ccw	41456	36633	32239	28540	24536	20722	17728	17433
	482	362	7192	120	210	cw	32287	27522	23154	19453	17499	16281	14896	14732

Heavy duty bearings are standard on 68 and above. Heavy duty bearings are not available for sizes 38 and 48.

* Direction of rotation with view on output shaft

To convert lbf to Newtons (N), multiply by 4.448

bold - Standard shaft

cw = clockwise / ccw = counter clockwise

MSM – solid output shaft

Permissible overhung loads at service factor SF = 1.0

1. **Calculation based on bearing life**

$$F_x \text{ perm.}_1 = F_R \text{ perm} \quad \frac{y}{z + X} \quad [lb_f]$$

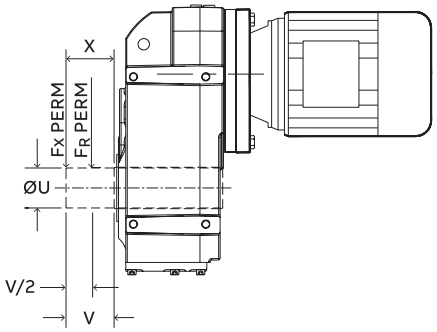

The data in the table below lists the permissible output shaft overhung load (OHL) when the load is located at mid shaft. To calculate the permissible OHL when the load is located at other positions, use the formulas above along with the data below.

Type stages	y in/mm	z in/mm	u in/mm	v in/mm	*	FR perm. in (lbf) for x=u for output speeds n2 in RPM							
						$n_2 \leq 16$	$n_2 \leq 25$	$n_2 \leq 40$	$n_2 \leq 63$	$n_2 \leq 100$	$n_2 \leq 160$	$n_2 \leq 250$	$n_2 \leq 263$
MW38 (2–5)	**5.20**	**3.82**	**1.250**	**2.76**	ccw	2380	2091	1823	1605	1412	1156	957	938
	132	97	30	70	cw	1633	1340	1078	860	670	666	643	639
MW48 (2–5)	5.94	4.76	1.375	2.76	ccw	3439	3021	2640	2285	1990	1623	1352	1323
	151	121	35	70	cw	2390	1968	1593	1348	1099	1063	992	983
MW58 (2–5)	6.69	5.31	1.375	2.76	ccw	1700	1700	1675	1375	1025	900	850	700
	170	135	35	70	cw	1700	1700	1525	1250	875	780	775	625
MW68 (2–5)	**7.48**	**5.91**	**1.5**	**3.15**	ccw	8206	7241	6370	5630	4972	4208	3585	3518
	190	150	40	80	cw	6554	5607	4735	3995	3347	3117	2891	2862
	7.87	5.91	1.4375	3.94	ccw	8281	7317	6436	5690	5017	4241	3624	3558
	200	150	45	100	cw	6613	5656	4778	4032	3377	3146	2918	2889
MW88 (2–5)	**8.56**	**6.89**	**2.000**	**3.94**	ccw	13312	11752	10312	9099	7951	6735	5773	5684
	225	175	50	100	cw	11041	9484	8058	6841	5902	5445	4946	4893
	9.65	6.89	1.9375	5.51	ccw	13429	11838	10381	9179	8030	6783	5814	5726
	245	175	60	140	cw	11126	9555	8117	6905	5946	5484	4985	4927
MW108 (2–5)	**10.71**	**7.95**	**2.375**	**5.51**	ccw	16839	14908	13115	11603	10291	8630	7352	7210
	272	202	60	140	cw	13116	11167	9391	7898	6562	6252	5821	5766
	11.36	7.95	2.4375	6.69	ccw	16733	14794	13034	11532	10215	8582	7302	7161
	287	202	70	170	cw	13034	11097	9330	7846	6520	6211	5783	5727
MW128 (2–5)	**13.58**	**10.24**	**2.750**	**6.69**	ccw	27987	24739	21743	19240	16722	14096	12048	11829
	345	260	70	170	cw	21968	18739	15768	13280	11643	10891	10009	9901
	13.58	10.24	2.9375	6.69	ccw	27552	24328	21414	18936	16476	13858	11865	11662
	345	260	80	170	cw	21633	18469	15532	13084	11469	10727	9860	9752
MW148 (2–5)	**15.47**	**12.13**	**3.625**	**6.69**	ccw	28310	25104	22099	19628	16740	14071	12042	11834
	393	308	80	170	cw	21043	17835	14869	12385	11444	10757	9908	9805
	16.26	12.13	3.4375	8.27	ccw	28691	25444	22401	19867	16934	14265	12208	11998
	413	308	90	210	cw	21320	18069	15061	12549	11604	10909	10035	9931
MW168 (2–5)	**18.37**	**14.23**	**4.000**	**8.27**	ccw	43258	38235	33618	29781	25603	21601	18524	18216
	467	362	100	210	cw	33732	28711	24153	20322	18248	16984	15540	15369
	18.37	14.23	3.9375	8.27	ccw	43368	38330	33796	29888	25704	21688	18592	18285
	467	362	110	210	cw	33855	28821	24244	20370	18319	17047	15600	15428

Heavy duty bearings are standard on 68 and above. Heavy duty bearings are not available for sizes 38 and 48.

* Direction of rotation with view on output shaft

To convert lbf to Newtons (N), multiply by 4.448

bold - Standard shaft

cw = clockwise / ccw = counter clockwise

MSM Selection - 60 Hz

MSM 38

Size: MW382

Double reduction – Clamp collar, three-piece coupled, separate

NEMA motor frame		56C			—			140TC			180TC		
IEC motor frame		71D			80D			90D			100D		
Separate group		71			80			90			100		
Ratio	Output Rating data	3450	1750	1160	3450	1750	1160	3450	1750	1160	3450	1750	1160
	Output RPM	352	**179**	118	352	**179**	118	352	**179**	118	352	**179**	118
	Input Hp (max) **(C)**	3.98	**2.02**	1.34	4.85	**2.46**	1.63	9.86	**5.00**	3.24	11.19	**7.45**	5.23
9.80	Output torque, in–lb	712	**712**	712	867	**867**	867	1765	**1765**	1723	2002	**2630**	2784
	OHL input shaft	**(A)**	**218**	218	**(A)**	**346**	360	**(A)**	**456**	475	**(A)**	**713**	742
	OHL output shaft **(B)**	**(A)**	**678**	704	**(A)**	**678**	704	**(A)**	**678**	704	**(A)**	**678**	704
	Output RPM	303	**154**	102	303	**154**	102	303	**154**	102	303	**154**	102
	Input Hp (max) **(C)**	3.98	**2.02**	1.34	4.85	**2.46**	1.63	9.86	**5.00**	3.07	10.37	**6.91**	4.72
11.39	Output torque, in–lb	828	**828**	828	1008	**1008**	1008	2053	**2053**	1902	2159	**2836**	2921
	OHL input shaft	**(A)**	**217**	219	**(A)**	**346**	360	**(A)**	**456**	475	**(A)**	**714**	742
	OHL output shaft **(B)**	**(A)**	**704**	704	**(A)**	**704**	704	**(A)**	**704**	704	**(A)**	**704**	704
	Output RPM	273	**138**	92	273	**138**	92	273	**138**	92	273	**138**	92
	Input Hp (max) **(C)**	3.98	**2.02**	1.34	4.85	**2.46**	1.63	9.83	**5.00**	2.95	9.83	**6.42**	4.25
12.64	Output torque, in–lb	919	**919**	919	1119	**1119**	1119	2269	**2277**	2029	2269	**2921**	2921
	OHL input shaft	**(A)**	**219**	219	**(A)**	**346**	360	**(A)**	**455**	475	**(A)**	**714**	743
	OHL output shaft **(B)**	**(A)**	**704**	706	**(A)**	**704**	706	**(A)**	**704**	706	**(A)**	**704**	706
	Output RPM	251	**127**	84	251	**127**	84	251	**127**	84	251	**127**	84
	Input Hp (max) **(C)**	3.98	**2.02**	1.34	4.85	**2.46**	1.63	9.39	**4.99**	2.85	9.39	**5.89**	3.91
13.76	Output torque, in–lb	1001	**1001**	1001	1218	**1218**	1218	2361	**2473**	2134	2361	**2921**	2921
	OHL input shaft	(A)	**219**	219	**(A)**	**346**	360	**(A)**	**454**	475	**(A)**	**714**	743
	OHL output shaft **(B)**	673	**704**	706	673	**704**	706	673	**704**	706	673	**704**	706
	Output RPM	224	**114**	75	224	**114**	75	224	**114**	75	224	**114**	75
	Input Hp (max) **(C)**	3.98	**2.02**	1.34	4.85	**2.46**	1.63	8.83	**4.75**	2.72	8.83	**5.27**	3.49
15.39	Output torque, in–lb	1119	**1119**	1119	1363	**1363**	1363	2483	**2634**	2272	2483	**2921**	2921
	OHL input shaft	**(A)**	**218**	218	**(A)**	**346**	360	**(A)**	**454**	475	**(A)**	**709**	738
	OHL output shaft **(B)**	678	**704**	706	678	**704**	706	678	**704**	706	678	**704**	706
	Output RPM	205	**104**	69	205	**104**	69	205	**104**	69	205	**104**	69
	Input Hp (max) **(C)**	3.98	**2.02**	1.33	4.85	**2.46**	1.63	8.4	**4.56**	2.61	8.4	**4.82**	3.19
16.83	Output torque, in–lb	1224	**1224**	1215	1490	**1490**	1490	2583	**2763**	2384	2583	**2921**	2921
	OHL input shaft	**(A)**	**217**	217	**(A)**	**346**	360	**(A)**	**454**	475	**(A)**	**708**	738
	OHL output shaft **(B)**	678	**704**	706	678	**704**	706	678	**704**	706	678	**704**	706
	Output RPM	187	**95**	63	187	**95**	63	187	**95**	63	187	**95**	63
	Input Hp (max) **(C)**	3.91	**2.02**	1.27	4.85	**2.46**	1.63	7.96	**4.36**	2.49	7.96	**4.39**	2.91
18.47	Output torque, in–lb	1319	**1343**	1278	1635	**1635**	1635	2687	**2899**	2502	2687	**2921**	2921
	OHL input shaft	**(A)**	**218**	217	**(A)**	**345**	359	**(A)**	**454**	475	**(A)**	**710**	739
	OHL output shaft **(B)**	678	**706**	906	678	**706**	906	678	**706**	906	678	**706**	906
	Output RPM	169	**86**	57	169	**86**	57	169	**86**	57	169	**86**	57
	Input Hp (max) **(C)**	3.65	**1.98**	1.21	4.85	**2.46**	1.63	7.53	**3.98**	2.37	7.53	**3.98**	2.64
20.37	Output torque, in–lb	1357	**1453**	1344	1803	**1803**	1803	2801	**2921**	2627	2801	**2921**	2921
	OHL input shaft	**(A)**	**217**	217	**(A)**	**345**	359	**(A)**	**455**	475	**(A)**	**711**	740
	OHL output shaft **(B)**	678	**706**	906	678	**706**	906	678	**706**	906	678	**706**	906
	Output RPM	153	**78**	51	153	**78**	51	153	**78**	51	153	**78**	51
	Input Hp (max) **(C)**	3.38	**1.84**	1.15	4.85	**2.46**	1.56	7.08	**3.59**	2.25	7.08	**3.59**	2.38
22.58	Output torque, in–lb	1395	**1494**	1414	1998	**1998**	1915	2921	**2921**	2763	2921	**2921**	2921
	OHL input shaft	**(A)**	**218**	217	**(A)**	**344**	359	**(A)**	**456**	475	**(A)**	**712**	741
	OHL output shaft **(B)**	704	**706**	906	704	**706**	906	704	**706**	906	704	**706**	906
	Output RPM	135	**68**	45	135	**68**	45	135	**68**	45	135	**68**	45
	Input Hp (max) **(C)**	3.08	**1.67**	1.08	4.85	**2.46**	1.46	6.25	**3.17**	2.10	6.25	**3.17**	2.10
25.58	Output torque, in–lb	1439	**1541**	1498	2264	**2264**	2024	2921	**2921**	2921	2921	**2921**	2921
	OHL input shaft	**(A)**	**218**	218	**(A)**	**344**	359	**(A)**	**456**	475	**(A)**	**713**	742
	OHL output shaft **(B)**	704	**706**	906	704	**706**	906	704	**706**	906	704	**706**	906

Service factor: 1.0

(A) (B) (C) - See footnotes page on inside back cover

Blank areas (-) indicate configuration not available

MSM 38

Size: MW382

Double reduction – Clamp collar, three-piece coupled, separate

NEMA motor frame		56C			—			140TC			180TC		
IEC motor frame		71D			80D			90D			100D		
Separate group		71			80			90			100		
Ratio	Output Rating data	3450	1750	1160	3450	1750	1160	3450	1750	1160	3450	1750	1160
	Output RPM	122	**62**	41	122	**62**	41	122	**62**	41	122	**62**	41
	Input Hp (max) **(C)**	2.85	**1.55**	1.02	4.85	**2.37**	1.38	5.66	**2.87**	1.90	5.66	**2.87**	1.90
28.22	Output torque, in–lb	1471	**1576**	1565	2498	**2407**	2112	2921	**2921**	2921	2921	**2921**	2921
	OHL input shaft	**(A)**	**218**	218	**(A)**	**343**	359	**(A)**	**457**	475	**(A)**	**714**	743
	OHL output shaft **(B)**	704	**906**	906	704	**906**	906	704	**906**	906	704	**906**	906
	Output RPM	108	**55**	36	108	**55**	36	108	**55**	36	108	**55**	36
	Input Hp (max) **(C)**	2.59	**1.41**	0.95	4.85	**2.21**	1.28	5.01	**2.54**	1.68	5.01	**2.54**	1.68
31.91	Output torque, in–lb	1509	**1616**	1650	2824	**2536**	2225	2921	**2921**	2921	2921	**2921**	2921
	OHL input shaft	**(A)**	**218**	218	**(A)**	**343**	359	**(A)**	**457**	475	**(A)**	**714**	743
	OHL output shaft **(B)**	704	**906**	962	704	**906**	962	704	**906**	962	704	**906**	962
	Output RPM	95	**48**	32	95	**48**	32	95	**48**	32	–	**–**	–
	Input Hp (max) **(C)**	2.32	**1.26**	0.87	4.39	**2.03**	1.18	4.39	**2.23**	1.48	–	**–**	–
36.43	Output torque, in–lb	1546	**1656**	1717	2921	**2669**	2342	2921	**2921**	2921	–	**–**	–
	OHL input shaft	**(A)**	**219**	219	**(A)**	**344**	359	**(A)**	**457**	472	–	**–**	–
	OHL output shaft **(B)**	706	**906**	962	706	**906**	962	706	**906**	962	–	**–**	–
	Output RPM	90	**46**	30	90	**46**	30	90	**46**	30	–	**–**	–
	Input Hp (max) **(C)**	2.71	**1.47**	1.01	2.91	**1.93**	1.28	2.91	**1.93**	1.28	–	**–**	–
38.19	Output torque, in–lb	1890	**2026**	2100	2031	**2655**	2655	2031	**2655**	2655	–	**–**	–
	OHL input shaft	**(A)**	**210**	218	**(A)**	**346**	359	**(A)**	**457**	475	–	**–**	–
	OHL output shaft **(B)**	706	**906**	962	706	**906**	962	706	**906**	962	–	**–**	–
	Output RPM	79	**40**	27	79	**40**	27	79	**40**	27	–	**–**	–
	Input Hp (max) **(C)**	2.45	**1.33**	0.92	2.69	**1.70**	1.13	2.69	**1.70**	1.13	–	**–**	–
43.43	Output torque, in–lb	1946	**2086**	2162	2132	**2655**	2655	2132	**2655**	2655	–	**–**	–
	OHL input shaft	**(A)**	**210**	218	**(A)**	**346**	360	**(A)**	**457**	475	–	**–**	–
	OHL output shaft **(B)**	706	**906**	962	706	**906**	962	706	**906**	962	–	**–**	–
	Output RPM	70	**35**	23	70	**35**	23	70	**35**	23	–	**–**	–
	Input Hp (max) **(C)**	2.21	**1.20**	0.83	2.47	**1.49**	0.99	2.47	**1.49**	0.99	–	**–**	–
49.56	Output torque, in–lb	2000	**2143**	2222	2239	**2655**	2655	2239	**2655**	2655	–	**–**	–
	OHL input shaft	**(A)**	**210**	219	**(A)**	**346**	360	**(A)**	**457**	475	–	**–**	–
	OHL output shaft **(B)**	706	**962**	962	706	**962**	962	706	**962**	962	–	**–**	–
	Output RPM	62	**31**	21	62	**31**	21	62	**31**	21	–	**–**	–
	Input Hp (max) **(C)**	2.00	**1.09**	0.75	2.29	**1.32**	0.88	2.29	**1.32**	0.88	–	**–**	–
55.84	Output torque, in–lb	2045	**2191**	2271	2338	**2655**	2655	2338	**2655**	2655	–	**–**	–
	OHL input shaft	**(A)**	**211**	219	**(A)**	**346**	360	**(A)**	**457**	476	–	**–**	–
	OHL output shaft **(B)**	906	**962**	962	906	**962**	962	906	**962**	962	–	**–**	–
	Output RPM	55	**28**	19	55	**28**	19	55	**28**	19	–	**–**	–
	Input Hp (max) **(C)**	1.83	**0.99**	0.68	2.13	**1.18**	0.78	2.13	**1.18**	0.78	–	**–**	–
62.40	Output torque, in–lb	2083	**2232**	2314	2433	**2655**	2655	2433	**2655**	2655	–	**–**	–
	OHL input shaft	(A)	**211**	219	**(A)**	**346**	360	**(A)**	**457**	476	–	**–**	–
	OHL output shaft **(B)**	906	**962**	962	906	**962**	962	906	**962**	962	–	**–**	–
	Output RPM	48	**25**	16	48	**25**	16	–	**–**	–	–	**–**	–
	Input Hp (max) **(C)**	1.63	**0.89**	0.61	1.79	**1.04**	0.67	–	**–**	–	–	**–**	–
71.18	Output torque, in–lb	2125	**2277**	2361	2333	**2655**	2579	–	**–**	–	–	**–**	–
	OHL input shaft	**(A)**	**211**	219	**(A)**	**346**	360	–	**–**	–	–	**–**	–
	OHL output shaft **(B)**	906	**962**	962	906	**962**	962	–	**–**	–	–	**–**	–
	Output RPM	43	**22**	14	–	**–**	–	–	**–**	–	–	**–**	–
	Input Hp (max) **(C)**	1.34	**0.80**	0.5	–	**–**	–	–	**–**	–	–	**–**	–
80.17	Output torque, in–lb	1963	**2314**	2169	–	**–**	–	–	**–**	–	–	**–**	–
	OHL input shaft	**(A)**	**211**	220	–	**–**	–	–	**–**	–	–	**–**	–
	OHL output shaft **(B)**	962	**962**	962	–	**–**	–	–	**–**	–	–	**–**	–

Service factor: 1.0

(A) (B) (C) - See footnotes page on inside back cover

Blank areas (-) indicate configuration not available

MSM 38

Size: MW383

Triple reduction– Clamp collar, three-piece coupled, separate

NEMA motor frame		56C			—			140TC		
IEC motor frame		71D			80D			90D		
Separate group		71			80			90		
Ratio	Output Rating data	3450	1750	1160	3450	1750	1160	3450	1750	1160
	Output RPM	86	**44**	29	86	**44**	29	86	**44**	29
	Input Hp (max) **(C)**	3.96	**2.02**	1.34	3.96	**2.03**	1.34	3.96	**2.03**	1.34
40.04	Output torque, in–lb	2895	**2911**	2911	2895	**2921**	2921	2895	**2921**	2921
	OHL input shaft	**(A)**	**209**	218	**(A)**	**346**	360	**(A)**	**453**	471
	OHL output shaft **(B)**	706	**906**	962	706	**906**	962	706	**906**	962
	Output RPM	78	**40**	26	78	**40**	26	78	**40**	26
	Input Hp (max) **(C)**	3.63	**1.84**	1.22	3.63	**1.84**	1.22	3.63	**1.84**	1.22
44.05	Output torque, in–lb	2921	**2921**	2921	2921	**2921**	2921	2921	**2921**	2921
	OHL input shaft	**(A)**	**210**	218	**(A)**	**343**	357	**(A)**	**453**	471
	OHL output shaft **(B)**	706	**962**	962	706	**962**	962	706	**962**	962
	Output RPM	67	**34**	23	67	**34**	23	67	**34**	23
	Input Hp (max) **(C)**	3.12	**1.59**	1.05	3.12	**1.59**	1.05	3.12	**1.59**	1.05
51.16	Output torque, in–lb	2921	**2921**	2921	2921	**2921**	2921	2921	**2921**	2921
	OHL input shaft	**(A)**	**210**	218	**(A)**	**343**	357	**(A)**	**455**	473
	OHL output shaft **(B)**	706	**962**	962	706	**962**	962	706	**962**	962
	Output RPM	62	**32**	21	62	**32**	21	62	**32**	21
	Input Hp (max) **(C)**	2.89	**1.46**	0.97	2.89	**1.46**	0.97	2.89	**1.46**	0.97
55.40	Output torque, in–lb	2921	**2921**	2921	2921	**2921**	2921	2921	**2921**	2921
	OHL input shaft	**(A)**	**210**	219	**(A)**	**344**	358	**(A)**	**455**	474
	OHL output shaft **(B)**	906	**962**	962	906	**962**	962	906	**962**	962
	Output RPM	55	**28**	19	55	**28**	19	55	**28**	19
	Input Hp (max) **(C)**	2.55	**1.29**	0.86	2.55	**1.29**	0.86	2.55	**1.29**	0.86
62.66	Output torque, in–lb	2921	**2921**	2921	2921	**2921**	2921	2921	**2921**	2921
	OHL input shaft	**(A)**	**211**	219	**(A)**	**345**	359	**(A)**	**456**	474
	OHL output shaft **(B)**	906	**962**	962	906	**962**	962	906	**962**	962
	Output RPM	50	**25**	17	50	**25**	17	50	**25**	17
	Input Hp (max) **(C)**	2.32	**1.18**	0.78	2.32	**1.18**	0.78	2.32	**1.18**	0.78
68.86	Output torque, in–lb	2921	**2921**	2921	2921	**2921**	2921	2921	**2921**	2921
	OHL input shaft	**(A)**	**211**	219	**(A)**	**345**	359	**(A)**	**456**	475
	OHL output shaft **(B)**	906	**962**	962	906	**962**	962	906	**962**	962
	Output RPM	45	**23**	15	45	**23**	15	45	**23**	15
	Input Hp (max) **(C)**	2.11	**1.07**	0.71	2.11	**1.07**	0.71	2.11	**1.07**	0.71
75.95	Output torque, in–lb	2921	**2921**	2921	2921	**2921**	2921	2921	**2921**	2921
	OHL input shaft	**(A)**	**211**	220	**(A)**	**346**	359	**(A)**	**457**	475
	OHL output shaft **(B)**	906	**962**	962	906	**962**	962	906	**962**	962
	Output RPM	41	**21**	14	41	**21**	14	41	**21**	14
	Input Hp (max) **(C)**	1.90	**0.96**	0.64	1.90	**0.96**	0.64	1.90	**0.96**	0.64
84.13	Output torque, in–lb	2921	**2921**	2921	2921	**2921**	2921	2921	**2921**	2921
	OHL input shaft	**(A)**	**211**	220	**(A)**	**346**	360	**(A)**	**457**	475
	OHL output shaft **(B)**	906	**962**	962	906	**962**	962	906	**962**	962
	Output RPM	37	**19**	12	37	**19**	12	37	**19**	12
	Input Hp (max) **(C)**	1.71	**0.87**	0.57	1.71	**0.87**	0.57	1.71	**0.87**	0.57
93.67	Output torque, in–lb	2921	**2921**	2921	2921	**2921**	2921	2921	**2921**	2921
	OHL input shaft	**(A)**	**211**	220	**(A)**	**346**	360	**(A)**	**457**	475
	OHL output shaft **(B)**	962	**962**	962	962	**962**	962	962	**962**	962
	Output RPM	32	**16**	11	32	**16**	11	32	**16**	11
	Input Hp (max) **(C)**	1.49	**0.75**	0.50	1.49	**0.75**	0.50	1.49	**0.75**	0.50
107.49	Output torque, in–lb	2921	**2921**	2921	2921	**2921**	2921	2921	**2921**	2921
	OHL input shaft	**(A)**	**211**	220	**(A)**	**346**	360	**(A)**	**457**	475
	OHL output shaft **(B)**	962	**962**	962	962	**962**	962	962	**962**	962
	Output RPM	29	**15**	10	29	**15**	10	29	**15**	10
	Input Hp (max) **(C)**	1.34	**0.68**	0.45	1.34	**0.68**	0.45	1.34	**0.68**	0.45
118.98	Output torque, in–lb	2921	**2921**	2921	2921	**2921**	2921	2921	**2921**	2921
	OHL input shaft	**(A)**	**210**	218	**(A)**	**346**	360	**(A)**	**457**	475
	OHL output shaft **(B)**	962	**962**	962	962	**962**	962	962	**962**	962

Service factor: 1.0

(A) (B) (C) - See footnotes page on inside back cover

Blank areas (-) indicate configuration not available

MSM 38

Size: MW383

Triple reduction – Clamp collar, three-piece coupled, separate

NEMA motor frame		56C			—			140TC		
IEC motor frame		71D			80D			90D		
Separate group		71			80			90		
Ratio	Output Rating data	3450	1750	1160	3450	1750	1160	3450	1750	1160
	Output RPM	25	**13**	9	25	**13**	9	25	**13**	9
	Input Hp (max) **(C)**	1.18	**0.60**	0.40	1.18	**0.60**	0.40	1.18	**0.60**	0.40
135.32	Output torque, in–lb	2921	**2921**	2921	2921	**2921**	2921	2921	**2921**	2921
	OHL input shaft	**(A)**	**210**	218	**(A)**	**346**	360	**(A)**	**457**	476
	OHL output shaft **(B)**	962	**962**	962	962	**962**	962	962	**962**	962
	Output RPM	22	**11**	8	22	**11**	8	22	**11**	8
	Input Hp (max) **(C)**	1.04	**0.53**	0.35	1.04	**0.53**	0.35	1.04	**0.53**	0.35
154.43	Output torque, in–lb	2921	**2921**	2921	2921	**2921**	2921	2921	**2921**	2921
	OHL input shaft	**(A)**	**210**	219	**(A)**	**346**	360	**(A)**	**457**	476
	OHL output shaft **(B)**	962	**962**	962	962	**962**	962	962	**962**	962
	Output RPM	20	**10**	7	20	**10**	7	20	**10**	7
	Input Hp (max) **(C)**	0.92	**0.47**	0.31	0.92	**0.47**	0.31	0.92	**0.47**	0.31
173.99	Output torque, in–lb	2921	**2921**	2921	2921	**2921**	2921	2921	**2921**	2921
	OHL input shaft	(A)	**211**	219	**(A)**	**346**	360	**(A)**	**457**	476
	OHL output shaft **(B)**	962	**962**	962	962	**962**	962	962	**962**	962
	Output RPM	18	**9**	6	18	**9**	6	18	**9**	6
	Input Hp (max) **(C)**	0.82	**0.42**	0.28	0.82	**0.42**	0.28	0.82	**0.42**	0.28
194.43	Output torque, in–lb	2921	**2921**	2921	2921	**2921**	2921	2921	**2921**	2921
	OHL input shaft	**(A)**	**211**	219	**(A)**	**346**	360	**(A)**	**457**	476
	OHL output shaft **(B)**	962	**962**	962	962	**962**	962	962	**962**	962
	Output RPM	16	**8**	5	16	**8**	5	–	**–**	–
	Input Hp (max) **(C)**	0.72	**0.37**	0.24	0.72	**0.37**	0.24	–	**–**	–
221.77	Output torque, in–lb	2921	**2921**	2921	2921	**2921**	2921	–	**–**	–
	OHL input shaft	**(A)**	**211**	219	**(A)**	**346**	360	–	**–**	–
	OHL output shaft **(B)**	962	**962**	962	962	**962**	962	–	**–**	–
	Output RPM	14	**7**	5	–	**–**	–	–	**–**	–
	Input Hp (max) **(C)**	0.64	**0.32**	0.22	–	**–**	–	–	**–**	–
249.78	Output torque, in–lb	2921	**2921**	2921	–	**–**	–	–	**–**	–
	OHL input shaft	**(A)**	**211**	219	–	**–**	–	–	**–**	–
	OHL output shaft **(B)**	962	**962**	962	–	**–**	–	–	**–**	–

Service factor: 1.0

(A) (B) (C) - See footnotes page on inside back cover

Blank areas (-) indicate configuration not available

MSM 48

Size: MW482

Double reduction – Clamp collar, three-piece coupled, separate

NEMA motor frame		56C			—			140TC			180TC			—			210TC		
IEC motor frame		71D			80D			90D			100D			112D			—		
Separate group		71			80			90			100			112			—		
Ratio	Output Rating data	3450	1750	1160	3450	1750	1160	3450	1750	1160	3450	1750	1160	3450	1750	1160	3450	1750	1160
	Output RPM	–	–	–	434	**220**	146	434	**220**	146	434	**220**	146	434	**220**	146	434	**220**	146
	Input Hp (max) **(C)**	–	–	–	4.85	**2.46**	1.63	9.86	**5.00**	3.32	11.22	**7.70**	5.44	11.22	**7.70**	5.44	11.22	**7.70**	5.44
7.95	Output torque, in–lb	–	–	–	703	**703**	703	1432	**1432**	1432	1628	**2205**	2348	1628	**2205**	2348	1628	**2205**	2348
	OHL input shaft	–	–	–	**(A)**	**346**	360	**(A)**	**453**	471	**(A)**	**710**	738	**(A)**	**843**	877	(A)	**710**	738
	OHL output shaft **(B)**	–	–	–	**(A)**	**1025**	1098	**(A)**	**1025**	1098	**(A)**	**1025**	1098	**(A)**	**1025**	1098	(A)	**1025**	1098
	Output RPM	–	–	–	361	**183**	122	361	**183**	122	361	**183**	122	361	**183**	122	–	–	–
	Input Hp (max) **(C)**	–	–	–	4.85	**2.46**	1.63	9.86	**5.00**	3.32	10.30	**7.07**	4.99	10.30	**7.07**	4.99	–	–	–
9.55	Output torque, in–lb	–	–	–	845	**845**	845	1720	**1720**	1720	1796	**2432**	2590	1796	**2432**	2590	–	–	–
	OHL input shaft	–	–	–	**(A)**	**346**	360	**(A)**	**454**	472	**(A)**	**711**	738	**(A)**	**843**	877	–	–	–
	OHL output shaft **(B)**	–	–	–	**(A)**	**1025**	1098	**(A)**	**1025**	1098	**(A)**	**1025**	1098	**(A)**	**1025**	1098	–	–	–
	Output RPM	–	–	–	307	**156**	103	307	**156**	103	307	**156**	103	307	**156**	103	–	–	–
	Input Hp (max) **(C)**	–	–	–	4.85	**2.46**	1.63	9.50	**5.00**	3.32	9.50	**6.53**	4.61	9.50	**6.53**	4.61	–	–	–
11.24	Output torque, in–lb	–	–	–	995	**995**	995	1951	**2025**	2025	1951	**2642**	2814	1951	**2642**	2814	–	–	–
	OHL input shaft	–	–	–	**(A)**	**346**	360	**(A)**	**452**	470	**(A)**	**708**	738	**(A)**	**843**	877	–	–	–
	OHL output shaft **(B)**	–	–	–	**(A)**	**1098**	1098	**(A)**	**1098**	1098	**(A)**	**1098**	1098	**(A)**	**1098**	1098	–	–	–
	Output RPM	274	**139**	92	274	**139**	92	274	**139**	92	274	**139**	92	274	**139**	92	–	–	–
	Input Hp (max) **(C)**	3.98	**2.02**	1.34	4.85	**2.46**	1.63	8.97	**5.00**	3.32	8.97	**6.16**	4.35	8.97	**6.16**	4.35	–	–	–
12.59	Output torque, in–lb	916	**916**	916	1115	**1115**	1115	2063	**2269**	2269	2063	**2793**	2975	2063	**2793**	2975	–	–	–
	OHL input shaft	**(A)**	**210**	227	**(A)**	**346**	360	**(A)**	**456**	474	**(A)**	**708**	738	**(A)**	**843**	877	–	–	–
	OHL output shaft **(B)**	**(A)**	**1098**	1135	**(A)**	**1098**	1135	**(A)**	**1098**	1135	**(A)**	**1098**	1135	**(A)**	**1098**	1135	–	–	–
	Output RPM	244	**124**	82	244	**124**	82	244	**124**	82	244	**124**	82	244	**124**	82	–	–	–
	Input Hp (max) **(C)**	3.98	**2.02**	1.34	4.85	**2.46**	1.63	8.44	**5.00**	3.25	8.44	**5.80**	4.10	8.44	**5.80**	4.10	–	–	–
14.11	Output torque, in–lb	1026	**1026**	1026	1249	**1249**	1249	2177	**2543**	2494	2177	**2948**	3140	2177	**2948**	3140	–	–	–
	OHL input shaft	**(A)**	**210**	226	**(A)**	**346**	360	**(A)**	**456**	474	**(A)**	**708**	738	**(A)**	**844**	877	–	–	–
	OHL output shaft **(B)**	1025	**1098**	1135	1025	**1098**	1135	1025	**1098**	1135	1025	**1098**	1135	1025	**1098**	1135	–	–	–
	Output RPM	224	**114**	75	224	**114**	75	224	**114**	75	224	**114**	75	224	**114**	75	–	–	–
	Input Hp (max) **(C)**	3.98	**2.02**	1.34	4.85	**2.46**	1.63	8.06	**5.00**	3.14	8.06	**5.53**	3.91	8.06	**5.53**	3.91	–	–	–
15.41	Output torque, in–lb	1120	**1120**	1120	1364	**1364**	1364	2267	**2776**	2629	2267	**3070**	3270	2267	**3070**	3270	–	–	–
	OHL input shaft	(A)	**210**	228	**(A)**	**346**	360	**(A)**	**455**	475	**(A)**	**709**	739	**(A)**	**844**	877	–	–	–
	OHL output shaft **(B)**	1025	**1098**	1135	1025	**1098**	1135	1025	**1098**	1135	1025	**1098**	1135	1025	**1098**	1135	–	–	–
	Output RPM	207	**105**	70	207	**105**	70	207	**105**	70	207	**105**	70	207	**105**	70	–	–	–
	Input Hp (max) **(C)**	3.98	**2.02**	1.34	4.85	**2.46**	1.63	9.72	**5.00**	3.24	9.72	**6.48**	4.55	9.72	**6.48**	4.55	–	–	–
16.63	Output torque, in–lb	1209	**1209**	1209	1472	**1472**	1472	2955	**2997**	2925	2955	**3882**	4108	2955	**3882**	4108	–	–	–
	OHL input shaft	**(A)**	**209**	218	**(A)**	**346**	360	**(A)**	**456**	474	**(A)**	**709**	736	**(A)**	**810**	842	–	–	–
	OHL output shaft **(B)**	1025	**1098**	1135	1025	**1098**	1135	1025	**1098**	1135	1025	**1098**	1135	1025	**1098**	1135	–	–	–
	Output RPM	178	**90**	60	178	**90**	60	178	**90**	60	178	**90**	60	178	**90**	60	–	–	–
	Input Hp (max) **(C)**	3.98	**2.02**	1.34	4.85	**2.46**	1.63	8.97	**5.00**	3.07	8.97	**5.98**	4.04	8.97	**5.98**	4.04	–	–	–
19.34	Output torque, in–lb	1406	**1406**	1406	1712	**1712**	1712	3171	**3485**	3230	3171	**4168**	4248	3171	**4168**	4248	–	–	–
	OHL input shaft	**(A)**	**211**	219	**(A)**	**346**	360	**(A)**	**456**	475	**(A)**	**710**	738	**(A)**	**810**	844	–	–	–
	OHL output shaft **(B)**	1025	**1135**	1334	1025	**1135**	1334	1025	**1135**	1334	1025	**1135**	1334	1025	**1135**	1334	–	–	–
	Output RPM	161	**82**	54	161	**82**	54	161	**82**	54	161	**82**	54	161	**82**	54	–	–	–
	Input Hp (max) **(C)**	3.98	**2.02**	1.34	4.85	**2.46**	1.63	8.48	**5.00**	2.95	8.48	**5.50**	3.64	8.48	**5.50**	3.64	–	–	–
21.46	Output torque, in–lb	1560	**1560**	1560	1899	**1899**	1899	3323	**3867**	3444	3323	**4248**	4248	3323	**4248**	4248	–	–	–
	OHL input shaft	**(A)**	**210**	219	**(A)**	**346**	360	**(A)**	**455**	475	**(A)**	**708**	737	**(A)**	**811**	845	–	–	–
	OHL output shaft **(B)**	1025	**1135**	1334	1025	**1135**	1334	1025	**1135**	1334	1025	**1135**	1334	1025	**1135**	1334	–	–	–
	Output RPM	148	**75**	50	148	**75**	50	148	**75**	50	148	**75**	50	148	**75**	50	–	–	–
	Input Hp (max) **(C)**	3.98	**2.02**	1.34	4.85	**2.46**	1.63	8.08	**4.99**	2.85	8.08	**5.05**	3.35	8.08	**5.05**	3.35	–	–	–
23.37	Output torque, in–lb	1699	**1699**	1699	2068	**2068**	2068	3451	**4199**	3623	3451	**4248**	4248	3451	**4248**	4248	–	–	–
	OHL input shaft	(A)	**210**	219	**(A)**	**346**	360	**(A)**	**456**	475	**(A)**	**710**	739	**(A)**	**812**	845	–	–	–
	OHL output shaft **(B)**	1098	**1135**	1334	1098	**1135**	1334	1098	**1135**	1334	1098	**1135**	1334	1098	**1135**	1334	–	–	–
	Output RPM	132	**67**	44	132	**67**	44	132	**67**	44	132	**67**	44	132	**67**	44	–	–	–
	Input Hp (max) **(C)**	3.98	**2.02**	1.34	4.85	**2.46**	1.63	7.58	**4.51**	2.72	7.58	**4.51**	2.99	7.58	**4.51**	2.99	–	–	–
26.14	Output torque, in–lb	1900	**1900**	1900	2313	**2313**	2313	3621	**4248**	3858	3621	**4248**	4248	3621	**4248**	4248	–	–	–
	OHL input shaft	**(A)**	**209**	218	**(A)**	**346**	360	**(A)**	**456**	475	**(A)**	**711**	741	**(A)**	**812**	846	–	–	–
	OHL output shaft **(B)**	1098	**1135**	1334	1098	**1135**	1334	1098	**1135**	1334	1098	**1135**	1334	1098	**1135**	1334	–	–	–

Service factor: 1.0

(A) (B) (C) - See footnotes page on inside back cover

Blank areas (-) indicate configuration not available

MSM 48

Size: MW482

Double reduction – Clamp collar, three-piece coupled, separate

NEMA motor frame		56C			—			140TC			180TC			—			210TC		
IEC motor frame		71D			80D			90D			100D			112D			—		
Separate group		71			80			90			100			112			—		
Ratio	Output Rating data	3450	1750	1160	3450	1750	1160	3450	1750	1160	3450	1750	1160	3450	1750	1160	3450	1750	1160
	Output RPM	121	**61**	41	121	**61**	41	121	**61**	41	121	**61**	41	121	**61**	41	–	–	–
	Input Hp (max) **(C)**	3.97	**2.02**	1.33	4.85	**2.46**	1.63	7.20	**4.13**	2.61	7.20	**4.13**	2.74	7.20	**4.13**	2.74	–	–	–
28.58	Output torque, in–lb	2071	**2078**	2062	2529	**2529**	2529	3758	**4248**	4047	3758	**4248**	4248	3758	**4248**	4248	–	–	–
	OHL input shaft	**(A)**	**210**	217	**(A)**	**346**	360	**(A)**	**456**	475	**(A)**	**712**	741	**(A)**	**812**	846	–	–	–
	OHL output shaft **(B)**	1098	**1334**	1334	1098	**1334**	1334	1098	**1334**	1334	1098	**1334**	1334	1098	**1334**	1334	–	–	–
	Output RPM	110	**56**	37	110	**56**	37	110	**56**	37	110	**56**	37	110	**56**	37	–	–	–
	Input Hp (max) **(C)**	3.72	**2.02**	1.27	4.85	**2.46**	1.63	6.82	**3.76**	2.49	6.82	**3.80**	2.49	6.82	**3.76**	2.49	–	–	–
31.36	Output torque, in–lb	2133	**2280**	2170	2776	**2776**	2776	3907	**4248**	4247	3907	**4248**	4248	3907	**4248**	4248	–	–	–
	OHL input shaft	**(A)**	**209**	217	**(A)**	**345**	359	**(A)**	**456**	475	**(A)**	**713**	742	**(A)**	**813**	846	–	–	–
	OHL output shaft **(B)**	1098	**1334**	1334	1098	**1334**	1334	1098	**1334**	1334	1098	**1334**	1334	1098	**1334**	1334	–	–	–
	Output RPM	100	**51**	34	100	**51**	34	100	**51**	34	100	**51**	34	100	**51**	34	–	–	–
	Input Hp (max) **(C)**	3.47	**1.98**	1.21	4.85	**2.46**	1.63	6.43	**3.41**	2.26	6.43	**3.41**	2.26	6.43	**3.41**	2.26	–	–	–
34.58	Output torque, in–lb	2194	**2467**	2282	3061	**3061**	3061	4061	**4248**	4248	4061	**4248**	4248	4061	**4248**	4248	–	–	–
	OHL input shaft	**(A)**	**210**	217	**(A)**	**345**	359	**(A)**	**457**	475	**(A)**	**713**	743	**(A)**	**813**	846	–	–	–
	OHL output shaft **(B)**	1098	**1334**	1334	1098	**1334**	1334	1098	**1334**	1334	1098	**1334**	1334	1098	**1334**	1334	–	–	–
	Output RPM	90	**46**	30	90	**46**	30	90	**46**	30	90	**46**	30	90	**46**	30	–	–	–
	Input Hp (max) **(C)**	3.22	**1.84**	1.15	4.85	**2.46**	1.56	6.02	**3.08**	2.04	6.02	**3.08**	2.04	6.02	**3.08**	2.04	–	–	–
38.33	Output torque, in–lb	2255	**2537**	2400	3393	**3393**	3251	4219	**4248**	4248	4219	**4248**	4248	4219	**4248**	4248	–	–	–
	OHL input shaft	**(A)**	**210**	217	**(A)**	**344**	359	**(A)**	**457**	471	**(A)**	**714**	743	**(A)**	**813**	846	–	–	–
	OHL output shaft **(B)**	1135	**1334**	1334	1135	**1334**	1334	1135	**1334**	1334	1135	**1334**	1334	1135	**1334**	1334	–	–	–
	Output RPM	79	**40**	27	79	**40**	27	79	**40**	27	79	**40**	27	79	**40**	27	–	–	–
	Input Hp (max) **(C)**	2.93	**1.67**	1.08	4.85	**2.46**	1.46	5.36	**2.72**	1.80	5.36	**2.72**	1.80	5.36	**2.72**	1.80	–	–	–
43.43	Output torque, in–lb	2326	**2616**	2543	3844	**3844**	3437	4248	**4248**	4248	4248	**4248**	4248	4248	**4248**	4248	–	–	–
	OHL input shaft	**(A)**	**209**	218	**(A)**	**344**	359	**(A)**	**454**	471	**(A)**	**714**	743	**(A)**	**813**	846	–	–	–
	OHL output shaft **(B)**	1135	**1334**	1334	1135	**1334**	1334	1135	**1334**	1334	1135	**1334**	1334	1135	**1334**	1334	–	–	–
	Output RPM	72	**37**	24	72	**37**	24	72	**37**	24	72	**37**	24	72	**37**	24	–	–	–
	Input Hp (max) **(C)**	2.72	**1.55**	1.01	4.85	**2.37**	1.38	4.85	**2.46**	1.63	4.85	**2.46**	1.63	4.85	**2.46**	1.63	–	–	–
47.92	Output torque, in–lb	2378	**2675**	2641	4241	**4087**	3586	4248	**4248**	4248	4248	**4248**	4248	4248	**4248**	4248	–	–	–
	OHL input shaft	**(A)**	**209**	218	**(A)**	**343**	359	**(A)**	**454**	472	**(A)**	**714**	744	**(A)**	**813**	846	–	–	–
	OHL output shaft **(B)**	1135	**1334**	1334	1135	**1334**	1334	1135	**1334**	1334	1135	**1334**	1334	1135	**1334**	1334	–	–	–
	Output RPM	64	**32**	21	64	**32**	21	64	**32**	21	64	**32**	21	–	–	–	–	–	–
	Input Hp (max) **(C)**	2.46	**1.41**	0.92	4.29	**2.18**	1.28	4.29	**2.18**	1.44	4.29	**2.18**	1.44	–	–	–	–	–	–
54.17	Output torque, in–lb	2439	**2744**	2710	4248	**4248**	3778	4248	**4248**	4248	4248	**4248**	4248	–	–	–	–	–	–
	OHL input shaft	**(A)**	**211**	218	**(A)**	**343**	359	**(A)**	**455**	473	**(A)**	**715**	744	–	–	–	–	–	–
	OHL output shaft **(B)**	1135	**1334**	1334	1135	**1334**	1334	1135	**1334**	1334	1135	**1334**	1334	–	–	–	–	–	–
	Output RPM	56	**28**	19	56	**28**	19	56	**28**	19	–	–	–	–	–	–	–	–	–
	Input Hp (max) **(C)**	2.21	**1.26**	0.83	3.76	**1.91**	1.18	3.76	**1.91**	1.26	–	–	–	–	–	–	–	–	–
61.86	Output torque, in–lb	2500	**2812**	2777	4248	**4248**	3976	4248	**4248**	4248	–	–	–	–	–	–	–	–	–
	OHL input shaft	**(A)**	**211**	219	**(A)**	**344**	359	**(A)**	**455**	474	–	–	–	–	–	–	–	–	–
	OHL output shaft **(B)**	1334	**1334**	1334	1334	**1334**	1334	1334	**1334**	1334	–	–	–	–	–	–	–	–	–
	Output RPM	49	**25**	16	49	**25**	16	49	**25**	16	–	–	–	–	–	–	–	–	–
	Input Hp (max) **(C)**	1.99	**1.13**	0.74	3.31	**1.68**	1.09	3.31	**1.68**	1.11	–	–	–	–	–	–	–	–	–
70.33	Output torque, in–lb	2554	**2873**	2837	4248	**4248**	4148	4248	**4248**	4248	–	–	–	–	–	–	–	–	–
	OHL input shaft	(A)	211	219	**(A)**	**345**	359	**(A)**	**456**	475	–	–	–	–	–	–	–	–	–
	OHL output shaft **(B)**	1334	**1334**	1334	1334	**1334**	1334	1334	**1334**	1334	–	–	–	–	–	–	–	–	–
	Output RPM	46	**23**	15	46	**23**	15	46	**23**	15	–	–	–	–	–	–	–	–	–
	Input Hp (max) **(C)**	1.88	**1.07**	0.70	2.91	**1.57**	1.04	2.91	**1.57**	1.04	–	–	–	–	–	–	–	–	–
75.27	Output torque, in–lb	2580	**2904**	2867	4002	**4248**	4248	3995	**4248**	4248	–	–	–	–	–	–	–	–	–
	OHL input shaft	**(A)**	**211**	219	**(A)**	**345**	359	**(A)**	**456**	475	–	–	–	–	–	–	–	–	–
	OHL output shaft **(B)**	1334	**1334**	1334	1334	**1334**	1334	1334	**1334**	1334	–	–	–	–	–	–	–	–	–
	Output RPM	40	**20**	13	40	**20**	13	–	–	–	–	–	–	–	–	–	–	–	–
	Input Hp (max) **(C)**	1.66	**0.75**	0.62	1.87	**1.36**	0.69	–	–	–	–	–	–	–	–	–	–	–	–
86.77	Output Torque, In–Lb	2632	**2961**	2924	2959	**4248**	3271	–	–	–	–	–	–	–	–	–	–	–	–
	OHL Input Shaft	**(A)**	**211**	219	**(A)**	**346**	360	–	–	–	–	–	–	–	–	–	–	–	–
	OHL Output Shaft **(B)**	1334	**1334**	1334	1334	**1334**	1334	–	–	–	–	–	–	–	–	–	–	–	–

Service factor: 1.0

(A) (B) (C) - See footnotes page on inside back cover

Blank areas (-) indicate configuration not available

MSM 48

Size: MW483

Triple reduction – Clamp collar, three-piece coupled, separate

NEMA motor frame		56C			—			140TC			180TC		
IEC motor frame		71D			80D			90D			100D		
Separate group		71			80			90			100		
Ratio	**Output Rating data**	**3450**	**1750**	**1160**	**3450**	**1750**	**1160**	**3450**	**1750**	**1160**	**3450**	**1750**	**1160**
	Output RPM	84	**43**	28	84	**43**	28	84	**43**	28	84	**43**	28
	Input Hp (max) **(C)**	3.98	**2.02**	1.34	4.13	**2.46**	1.63	4.13	**2.83**	2.00	4.13	**2.83**	2.00
40.99	Output torque, in–lb	2980	**2980**	2980	3089	**3628**	3628	3089	**4182**	4455	3089	**4182**	4455
	OHL input shaft	**(A)**	**209**	218	**(A)**	**346**	360	**(A)**	**457**	475	**(A)**	**708**	737
	OHL output shaft **(B)**	1135	**1334**	1334	1135	**1334**	1334	1135	**1334**	1334	1135	**1334**	1334
	Output RPM	72	**37**	24	72	**37**	24	72	**37**	24	72	**37**	24
	Input Hp (max) **(C)**	3.73	**2.02**	1.34	3.73	**2.46**	1.63	3.73	**2.56**	1.81	3.73	**2.56**	1.81
47.66	Output torque, in–lb	3249	**3465**	3465	3249	**4219**	4219	3249	**4398**	4687	3249	**4398**	4687
	OHL input shaft	**(A)**	**211**	219	**(A)**	**346**	360	**(A)**	**457**	475	**(A)**	**709**	738
	OHL output shaft **(B)**	1135	**1334**	1334	1135	**1334**	1334	1135	**1334**	1334	1135	**1334**	1334
	Output RPM	65	**33**	22	65	**33**	22	65	**33**	22	65	**33**	22
	Input Hp (max) **(C)**	3.48	**2.02**	1.34	3.48	**2.39**	1.63	3.48	**2.39**	1.66	3.48	**2.39**	1.66
52.88	Output torque, in–lb	3364	**3845**	3845	3364	**4555**	4681	3364	**4555**	4780	3364	**4555**	4780
	OHL input shaft	**(A)**	**210**	219	**(A)**	**346**	360	**(A)**	**457**	476	**(A)**	**710**	738
	OHL output shaft **(B)**	1135	**1334**	1334	1135	**1334**	1334	1135	**1334**	1334	1135	**1334**	1334
	Output RPM	60	**30**	20	60	**30**	20	60	**30**	20	60	**30**	20
	Input Hp (max) **(C)**	3.29	**2.02**	1.34	3.29	**2.26**	1.53	3.29	**2.26**	1.53	3.29	**2.26**	1.53
57.59	Output torque, in–lb	3460	**4187**	4187	3460	**4686**	4780	3460	**4686**	4780	3460	**4686**	4780
	OHL input shaft	**(A)**	**210**	219	**(A)**	**346**	360	**(A)**	**457**	476	**(A)**	**710**	739
	OHL output shaft **(B)**	1334	**1334**	1334	1334	**1334**	1334	1334	**1334**	1334	1334	**1334**	1334
	Output RPM	54	**27**	18	54	**27**	18	54	**27**	18	54	**27**	18
	Input Hp (max) **(C)**	3.05	**2.02**	1.34	3.05	**2.06**	1.37	3.05	**2.06**	1.37	3.05	**2.06**	1.37
64.41	Output torque, in–lb	3592	**4683**	4683	3592	**4780**	4780	3592	**4780**	4780	3592	**4780**	4780
	OHL input shaft	**(A)**	**209**	218	**(A)**	**346**	360	**(A)**	**457**	476	**(A)**	**711**	740
	OHL output shaft **(B)**	1334	**1334**	1334	1334	**1334**	1334	1334	**1334**	1334	1334	**1334**	1334
	Output RPM	49	**25**	16	49	**25**	16	49	**25**	16	49	**25**	16
	Input Hp (max) **(C)**	2.88	**1.88**	1.25	2.88	**1.88**	1.25	2.88	**1.88**	1.25	2.88	**1.88**	1.25
70.42	Output torque, in–lb	3700	**4780**	4780	3700	**4780**	4780	3700	**4780**	4780	3700	**4780**	4780
	OHL input shaft	**(A)**	**210**	218	**(A)**	**346**	360	**(A)**	**457**	476	**(A)**	**712**	741
	OHL output shaft **(B)**	1334	**1334**	1334	1334	**1334**	1334	1334	**1334**	1334	1334	**1334**	1334
	Output RPM	45	**23**	15	45	**23**	15	45	**23**	15	45	**23**	15
	Input Hp (max) **(C)**	2.70	**1.72**	1.14	2.70	**1.72**	1.14	2.70	**1.72**	1.14	2.70	**1.72**	1.14
77.29	Output torque, in–lb	3817	**4780**	4780	3817	**4780**	4780	3817	**4780**	4780	3817	**4780**	4780
	OHL input shaft	**(A)**	**210**	219	**(A)**	**346**	360	**(A)**	**457**	476	**(A)**	**713**	742
	OHL output shaft **(B)**	1334	**1334**	1334	1334	**1334**	1334	1334	**1334**	1334	1334	**1334**	1334
	Output RPM	40	**21**	14	40	**21**	14	40	**21**	14	40	**21**	14
	Input Hp (max) **(C)**	2.53	**1.56**	1.03	2.53	**1.56**	1.03	2.53	**1.56**	1.03	2.53	**1.56**	1.03
85.22	Output torque, in–lb	3944	**4780**	4780	3944	**4780**	4780	3944	**4780**	4780	3944	**4780**	4780
	OHL input shaft	**(A)**	**211**	219	**(A)**	**346**	360	**(A)**	**453**	472	**(A)**	**713**	742
	OHL output shaft **(B)**	1334	**1334**	1334	1334	**1334**	1334	1334	**1334**	1334	1334	**1334**	1334
	Output RPM	37	**19**	12	37	**19**	12	37	**19**	12	37	**19**	12
	Input Hp (max) **(C)**	2.36	**1.40**	0.93	2.36	**1.40**	0.93	2.36	**1.40**	0.93	2.36	**1.40**	0.93
94.46	Output torque, in–lb	4081	**4780**	4780	4081	**4780**	4780	4081	**4780**	4780	4081	**4780**	4780
	OHL input shaft	**(A)**	**211**	219	**(A)**	**346**	357	**(A)**	**454**	472	**(A)**	**713**	742
	OHL output shaft **(B)**	1334	**1334**	1334	1334	**1334**	1334	1334	**1334**	1334	1334	**1334**	1334
	Output RPM	32	**16**	11	32	**16**	11	32	**16**	11	32	**16**	11
	Input Hp (max) **(C)**	2.18	**1.24**	0.82	2.18	**1.24**	0.82	2.18	**1.24**	0.82	2.18	**1.24**	0.82
107.02	Output torque, in–lb	4255	**4780**	4780	4255	**4780**	4780	4255	**4780**	4780	4255	**4780**	4780
	OHL input shaft	**(A)**	**209**	218	**(A)**	**343**	357	**(A)**	**455**	473	**(A)**	**714**	743
	OHL output shaft **(B)**	1334	**1334**	1334	1334	**1334**	1334	1334	**1334**	1334	1334	**1334**	1334
	Output RPM	29	**15**	10	29	**15**	10	29	**15**	10	29	**15**	10
	Input Hp (max) **(C)**	2.04	**1.12**	0.74	2.04	**1.12**	0.74	2.04	**1.12**	0.74	2.04	**1.12**	0.74
118.08	Output torque, in–lb	4396	**4780**	4780	4396	**4780**	4780	4396	**4780**	4780	4396	**4780**	4780
	OHL input shaft	**(A)**	**209**	218	**(A)**	**344**	358	**(A)**	**455**	474	**(A)**	**714**	743
	OHL output shaft **(B)**	1334	**1334**	1334	1334	**1334**	1334	1334	**1334**	1334	1334	**1334**	1334

Service factor: 1.0

(A) (B) (C) - See footnotes page on inside back cover

Blank areas (-) indicate configuration not available

MSM 48

Size: MW483

Triple reduction – Clamp collar, three-piece coupled, separate

NEMA motor frame		56C			—			140TC			180TC		
IEC motor frame		71D			80D			90D			100D		
Separate group		71			80			90			100		
Ratio	**Output Rating data**	**3450**	**1750**	**1160**	**3450**	**1750**	**1160**	**3450**	**1750**	**1160**	**3450**	**1750**	**1160**
	Output RPM	26	**13**	9	26	**13**	9	26	**13**	9	26	**13**	9
	Input Hp (max) **(C)**	1.88	**0.99**	0.66	1.88	**0.99**	0.66	1.88	**0.99**	0.66	1.88	**0.99**	0.66
133.50	Output torque, in–lb	4579	**4780**	4780	4579	**4780**	4780	4579	**4780**	4780	4579	**4780**	4780
	OHL input shaft	**(A)**	**210**	218	**(A)**	**345**	359	**(A)**	**456**	474	**(A)**	**714**	743
	OHL output shaft **(B)**	1334	**1334**	1334	1334	**1334**	1334	1334	**1334**	1334	1334	**1334**	1334
	Output RPM	23	**11**	8	23	**11**	8	23	**11**	8	–	**–**	–
	Input Hp (max) **(C)**	1.72	**0.87**	0.58	1.72	**0.87**	0.58	1.72	**0.87**	0.58	–	**–**	–
152.43	Output torque, in–lb	4780	**4780**	4780	4780	**4780**	4780	4780	**4780**	4780	–	**–**	–
	OHL input shaft	**(A)**	**210**	219	**(A)**	**345**	359	**(A)**	**456**	475	–	**–**	–
	OHL output shaft **(B)**	1334	**1334**	1334	1334	**1334**	1334	1334	**1334**	1334	–	**–**	–
	Output RPM	20	**10**	7	20	**10**	7	20	**10**	7	–	**–**	–
	Input Hp (max) **(C)**	1.51	**0.77**	0.51	1.51	**0.77**	0.51	1.51	**0.77**	0.51	–	**–**	–
173.31	Output torque, in–lb	4780	**4780**	4780	4780	**4780**	4780	4780	**4780**	4780	–	**–**	–
	OHL input shaft	**(A)**	**211**	219	**(A)**	**346**	359	**(A)**	**457**	475	–	**–**	–
	OHL output shaft **(B)**	1334	**1334**	1334	1334	**1334**	1334	1334	**1334**	1334	–	**–**	–
	Output RPM	19	**9**	6	19	**9**	6	19	**9**	6	–	**–**	–
	Input Hp (max) **(C)**	1.41	**0.72**	0.47	1.41	**0.72**	0.47	1.41	**0.72**	0.47	–	**–**	–
185.49	Output torque, in–lb	4780	**4780**	4780	4780	**4780**	4780	4780	**4780**	4780	–	**–**	–
	OHL input shaft	**(A)**	**211**	219	**(A)**	**346**	360	**(A)**	**457**	475	–	**–**	–
	OHL output shaft **(B)**	1334	**1334**	1334	1334	**1334**	1334	1334	**1334**	1334	–	**–**	–
	Output RPM	16	**8**	5	16	**8**	5	–	**–**	–	–	**–**	–
	Input Hp (max) **(C)**	1.22	**0.62**	0.41	1.22	**0.62**	0.41	–	**–**	–	–	**–**	–
213.83	Output torque, in–lb	4780	**4780**	4780	4780	**4780**	4780	–	**–**	–	–	**–**	–
	OHL input shaft	(A)	**211**	220	**(A)**	**346**	360	–	**–**	–	–	**–**	–
	OHL output shaft **(B)**	1334	**1334**	1334	1334	**1334**	1334	–	**–**	–	–	**–**	–

Service factor: 1.0

(A) (B) (C) - See footnotes page on inside back cover

Blank areas (-) indicate configuration not available

MSM 58

Size: MW582

Triple reduction – Clamp collar, three-piece coupled, separate

NEMA motor frame		56C			---			140TC			180TC			---			210TC		
IEC motor frame		71D			80D			90D			100			112D			132D		
Separate group		71			80			90			100			112			132		
Ratio	Output Rating data	3450	1750	1160	3450	1750	1160	3450	1750	1160	3450	1750	1160	3450	1750	1160	3450	1750	1160
	Output RPM	-	-	-	-	-	-	-	-	-	438	**222**	147	438	**222**	147	438	**222**	147
	Input HP	-	-	-	-	-	-	-	-	-	20.44	**10.36**	6.86	27.38	**13.88**	9.19	42.70	**22.70**	15.42
7.88	Output Torque, In-Lb	-	-	-	-	-	-	-	-	-	2940	**2938**	2935	3939	**3936**	3932	6143	**6438**	6597
	OHL Input Shaft	-	-	-	-	-	-	-	-	-	**(A)**	**710**	735	**(A)**	**840**	875	**(A)**	**950**	985
	OHL Output Shaft	-	-	-	-	-	-	-	-	-	**(A)**	**2200**	2200	**(A)**	**2200**	2200	**(A)**	**2200**	2200
	Output RPM	-	-	-	350	**177**	118	350	**177**	118	350	**177**	118	350	**177**	118	350	**177**	118
	Input HP	-	-	-	4.85	**2.46**	1.63	9.87	**5.01**	3.32	20.44	**10.36**	6.86	27.38	**13.88**	9.19	34.80	**18.40**	12.44
9.87	Output Torque, In-Lb	-	-	-	874	**874**	874	1780	**1781**	1780	3685	**3683**	3679	4937	**4934**	4928	6275	**6540**	6671
	OHL Input Shaft	-	-	-	(A)	**345**	360	(A)	**455**	470	**(A)**	**710**	735	**(A)**	**840**	875	**(A)**	**950**	985
	OHL Output Shaft	-	-	-	2200	**2200**	2200	2200	**2200**	2200	**2200**	**2200**	2200	**2200**	**2200**	2200	**2200**	**2200**	2200
	Output RPM	-	-	-	308	**156**	104	308	**156**	104	308	**156**	104	308	**156**	104	308	**156**	104
	Input HP	-	-	-	4.85	**2.46**	1.63	9.87	**5.01**	3.32	20.44	**10.36**	6.86	27.38	**13.88**	9.19	30.90	**16.30**	11.04
11.19	Output Torque, In-Lb	-	-	-	991	**991**	991	2017	**2018**	2018	4176	**4173**	4169	5594	**5591**	5585	6314	**6566**	6711
	OHL Input Shaft	-	-	-	(A)	**345**	360	(A)	**455**	470	(A)	**710**	735	(A)	**840**	875	(A)	**950**	985
	OHL Output Shaft	-	-	-	2200	**2200**	2200	2200	**2200**	2200	2200	**2200**	2200	2200	**2200**	2200	2200	**2200**	2200
	Output RPM	-	-	-	253	**128**	85	253	**128**	85	253	**128**	85	253	**128**	85	253	**128**	85
	Input HP	-	-	-	4.85	**2.46**	1.63	9.87	**5.01**	3.32	20.44	**10.36**	6.86	25.70	**13.50**	9.13	25.70	**13.50**	9.13
13.65	Output Torque, In-Lb	-	-	-	1209	**1209**	1209	2461	**2463**	2462	5097	**5093**	5088	6408	**6636**	6773	6408	**6636**	6773
	OHL Input Shaft	-	-	-	(A)	**345**	360	(A)	**455**	470	(A)	**710**	735	(A)	**840**	875	(A)	**950**	985
	OHL Output Shaft	-	-	-	2200	**2200**	2200	2200	**2200**	2200	2200	**2200**	2200	2200	**2200**	2200	2200	**2200**	2200
	Output RPM	233	**118**	78	233	**118**	78	233	**118**	78	233	**118**	78	233	**118**	78	233	**118**	78
	Input HP	3.98	**2.02**	1.34	4.85	**2.46**	1.63	9.87	**5.01**	3.32	20.44	**10.36**	6.86	23.80	**12.50**	8.46	23.80	**12.50**	8.46
14.80	Output Torque, In-Lb	1076	**1076**	1077	1311	**1311**	1310	2668	**2669**	2669	5524	**5520**	5514	6432	**6660**	6797	6432	**6660**	6797
	OHL Input Shaft	(A)	**215**	225	(A)	**345**	360	(A)	**455**	470	(A)	**710**	735	(A)	**840**	875	(A)	**950**	985
	OHL Output Shaft	2200	**2200**	2200	2200	**2200**	2200	2200	**2200**	2200	2200	**2200**	2200	2200	**2200**	2200	2200	**2200**	2200
	Output RPM	205	**104**	69	205	**104**	69	205	**104**	69	205	**104**	69	205	**104**	69	205	**104**	69
	Input HP	3.98	**2.02**	1.34	4.85	**2.46**	1.63	9.87	**5.01**	3.32	20.44	**10.36**	6.86	21.10	**11.10**	7.49	21.10	**11.10**	7.49
16.80	Output Torque, In-Lb	1221	**1222**	1223	1488	**1488**	1488	3029	**3031**	3030	6273	**6268**	6262	6476	**6716**	6834	6476	**6716**	6834
	OHL Input Shaft	(A)	**215**	225	(A)	**345**	360	(A)	**455**	470	(A)	**710**	735	(A)	**840**	875	(A)	**950**	985
	OHL Output Shaft	2200	**2200**	2200	2200	**2200**	2200	2200	**2200**	2200	2200	**2200**	2200	2200	**2200**	2200	2200	**2200**	2200
	Output RPM	192	**97**	65	192	**97**	65	192	**97**	65	192	**97**	65	192	**97**	65	192	**97**	65
	Input HP	3.98	**2.02**	1.34	4.85	**2.46**	1.63	9.87	**5.01**	3.32	19.80	**10.36**	6.86	19.80	**10.40**	7.02	19.80	**10.40**	7.02
17.96	Output Torque, In-Lb	1306	**1307**	1308	1591	**1591**	1591	3238	**3241**	3240	6497	**6701**	6694	6497	**6727**	6850	6497	**6727**	6850
	OHL Input Shaft	(A)	**215**	225	(A)	**345**	360	(A)	**455**	470	(A)	**710**	735	(A)	**840**	875	(A)	**950**	985
	OHL Output Shaft	2200	**2200**	2200	2200	**2200**	2200	2200	**2200**	2200	2200	**2200**	2200	2200	**2200**	2200	2200	**2200**	2200
	Output RPM	169	**86**	57	169	**86**	57	169	**86**	57	169	**86**	57	169	**86**	57	169	**86**	57
	Input HP	3.98	**2.02**	1.34	4.85	**2.46**	1.63	9.87	**5.01**	3.32	17.60	**9.20**	6.19	17.60	**9.20**	6.19	17.60	**9.20**	6.19
20.38	Output Torque, In-Lb	1482	**1483**	1484	1806	**1806**	1805	3675	**3677**	3676	6553	**6753**	6850	6553	**6753**	6850	6553	**6753**	6850
	OHL Input Shaft	(A)	**215**	225	(A)	**345**	360	(A)	**455**	470	(A)	**710**	735	(A)	**840**	875	(A)	**950**	985
	OHL Output Shaft	2200	**2200**	2200	2200	**2200**	2200	2200	**2200**	2200	2200	**2200**	2200	2200	**2200**	2200	2200	**2200**	2200
	Output RPM	157	**80**	53	157	**80**	53	157	**80**	53	157	**80**	53	157	**80**	53	157	**80**	53
	Input HP	3.98	**2.02**	1.34	4.85	**2.46**	1.63	9.87	**5.01**	3.32	16.40	**8.60**	5.73	16.40	**8.60**	5.73	16.40	**8.60**	5.73
21.98	Output Torque, In-Lb	1598	**1599**	1601	1948	**1948**	1947	3964	**3967**	3965	6586	**6809**	6850	6586	**6809**	6850	6586	**6809**	6850
	OHL Input Shaft	(A)	**215**	225	(A)	**345**	360	(A)	**455**	470	(A)	**710**	735	(A)	**840**	875	(A)	**950**	985
	OHL Output Shaft	2200	**2200**	2200	2200	**2200**	2200	2200	**2200**	2200	2200	**2200**	2200	2200	**2200**	2200	2200	**2200**	2200
	Output RPM	145	**74**	49	145	**74**	49	145	**74**	49	145	**74**	49	145	**74**	49	145	**74**	49
	Input HP	3.98	**2.02**	1.34	4.85	**2.46**	1.63	9.87	**5.01**	3.32	15.20	**7.99**	5.30	15.20	**7.99**	5.30	15.20	**7.99**	5.30
23.80	Output Torque, In-Lb	1730	**1731**	1733	2109	**2109**	2108	4291	**4294**	4293	6609	**6847**	6850	6609	**6847**	6850	6609	**6847**	6850
	OHL Input Shaft	(A)	**215**	225	(A)	**345**	360	(A)	**455**	470	(A)	**710**	735	(A)	**840**	875	(A)	**950**	985
	OHL Output Shaft	2200	**2200**	2200	2200	**2200**	2200	2200	**2200**	2200	2200	**2200**	2200	2200	**2200**	2200	2200	**2200**	2200
	Output RPM	133	**68**	45	133	**68**	45	133	**68**	45	133	**68**	45	133	**68**	45	133	**68**	45
	Input HP	3.98	**2.02**	1.34	4.85	**2.46**	1.63	9.87	**5.01**	3.32	14.03	**7.34**	4.87	14.03	**7.34**	4.87	14.03	**7.34**	4.87
25.88	Output Torque, In-Lb	1881	**1882**	1884	2292	**2292**	2291	4665	**4669**	4667	6630	**6840**	6850	6630	**6840**	6850	6630	**6840**	6850
	OHL Input Shaft	(A)	**215**	225	(A)	**345**	360	(A)	**455**	470	(A)	**710**	735	(A)	**840**	875	(A)	**950**	985
	OHL Output Shaft	2200	**2200**	2200	2200	**2200**	2200	2200	**2200**	2200	2200	**2200**	2200	2200	**2200**	2200	2200	**2200**	2200
	Output RPM	123	**63**	42	123	**63**	42	123	**63**	42	123	**63**	42	123	**63**	42	-	-	-
	Input HP	3.98	**2.02**	1.34	4.85	**2.46**	1.63	9.80	**5.01**	3.32	9.80	**6.10**	4.30	9.80	**6.10**	4.30	-	-	-
27.94	Output Torque, In-Lb	2031	**2032**	2034	2475	**2475**	2474	5001	**5041**	5039	5001	**6137**	6527	5001	**6137**	6527	-	-	-
	OHL Input Shaft	(A)	**215**	225	(A)	**345**	360	(A)	**455**	470	(A)	**710**	735	(A)	**840**	875	-	-	-
	OHL Output Shaft	2200	**2200**	2200	2200	**2200**	2200	2200	**2200**	2200	2200	**2200**	2200	2200	**2200**	2200	-	-	-

MSM 58

Size: MW582

Triple reduction – Clamp collar, three-piece coupled, separate

NEMA motor frame		56C			---			140TC			180TC			---			210TC		
IEC motor frame		71D			80D			90D			100			112D			132D		
Separate group		71			80			90			100			112			132		
Ratio	Output Rating data	3450	1750	1160	3450	1750	1160	3450	1750	1160	3450	1750	1160	3450	1750	1160	3450	1750	1160
	Output RPM	114	58	38	114	58	38	114	58	38	114	58	38	114	58	38	-	-	-
	Input HP	3.98	2.02	1.34	4.85	2.46	1.63	9.30	5.01	3.32	9.30	5.80	4.00	9.30	5.80	4.00	-	-	-
30.29	Output Torque, In-Lb	2202	2203	2205	2683	2683	2682	5146	5465	5463	5146	6327	6582	5146	6327	6582	-	-	-
	OHL Input Shaft	(A)	215	225	(A)	345	360	(A)	455	470	(A)	710	735	(A)	840	875	-	-	-
	OHL Output Shaft	2200	2200	2200	2200	2200	2200	2200	2200	2200	2200	2200	2200	2200	2200	2200	-	-	-
	Output RPM	105	53	35	105	53	35	105	53	35	105	53	35	105	53	35	-	-	-
	Input HP	3.98	2.02	1.34	4.85	2.46	1.63	8.70	5.01	3.32	8.70	5.40	3.70	8.70	5.40	3.70	-	-	-
32.95	Output Torque, In-Lb	2396	2397	2399	2920	2920	2918	5237	5946	5944	5237	6409	6625	5237	6409	6625	-	-	-
	OHL Input Shaft	(A)	215	225	(A)	345	360	(A)	455	470	(A)	710	735	(A)	840	875	-	-	-
	OHL Output Shaft	2200	2200	2200	2200	2200	2200	2200	2200	2200	2200	2200	2200	2200	2200	2200	-	-	-
	Output RPM	96	49	32	96	49	32	96	49	32	96	49	32	96	49	32	-	-	-
	Input HP	3.98	2.02	1.34	4.85	2.46	1.63	8.20	5.00	3.32	8.20	5.00	3.40	8.20	5.00	3.40	-	-	-
36.00	Output Torque, In-Lb	2617	2619	2621	3190	3189	3188	5393	6482	6494	5393	6482	6650	5393	6482	6650	-	-	-
	OHL Input Shaft	(A)	215	225	(A)	345	360	(A)	455	470	(A)	710	735	(A)	840	875	-	-	-
	OHL Output Shaft	2200	2200	2200	2200	2200	2200	2200	2200	2200	2200	2200	2200	2200	2200	2200	-	-	-
	Output RPM	87	44	29	87	44	29	87	44	29	87	44	29	87	44	29	-	-	-
	Input HP	3.98	2.02	1.34	4.85	2.46	1.63	7.60	4.60	3.10	7.60	4.60	3.10	7.60	4.60	3.10	-	-	-
39.52	Output Torque, In-Lb	2873	2875	2877	3501	3501	3499	5486	6546	6655	5486	6546	6655	5486	6546	6655	-	-	-
	OHL Input Shaft	(A)	215	225	(A)	345	360	(A)	455	470	(A)	710	735	(A)	840	875	-	-	-
	OHL Output Shaft	2200	2200	2200	2200	2200	2200	2200	2200	2200	2200	2200	2200	2200	2200	2200	-	-	-
	Output RPM	79	40	27	79	40	27	79	40	27	79	40	27	-	-	-	-	-	-
	Input HP	3.98	2.02	1.34	4.85	2.46	1.63	7.10	4.20	2.80	7.10	4.20	2.80	-	-	-	-	-	-
43.62	Output Torque, In-Lb	3171	3173	3175	3864	3864	3863	5657	6597	6635	5657	6597	6635	-	-	-	-	-	-
	OHL Input Shaft	(A)	215	225	(A)	345	360	(A)	455	470	(A)	710	735	-	-	-	-	-	-
	OHL Output Shaft	2200	2200	2200	2200	2200	2200	2200	2200	2200	2200	2200	2200	-	-	-	-	-	-
	Output RPM	70	36	24	70	36	24	70	36	24	70	36	24	-	-	-	-	-	-
	Input HP	3.98	2.02	1.34	4.85	2.46	1.63	6.50	3.70	2.50	6.50	3.70	2.50	-	-	-	-	-	-
49.21	Output Torque, In-Lb	3578	3580	3582	4360	4359	4358	5843	6557	6684	5843	6557	6684	-	-	-	-	-	-
	OHL Input Shaft	(A)	215	225	(A)	345	360	(A)	455	470	(A)	710	735	-	-	-	-	-	-
	OHL Output Shaft	2200	2200	2200	2200	2200	2200	2200	2200	2200	2200	2200	2200	-	-	-	-	-	-
	Output RPM	64	32	21	64	32	21	64	32	21	64	32	21	-	-	-	-	-	-
	Input HP	3.98	2.02	1.34	4.85	2.46	1.63	6.10	3.40	2.30	6.10	3.40	2.30	-	-	-	-	-	-
54.12	Output Torque, In-Lb	3934	3937	3940	4795	4794	4792	6030	6626	6762	6030	6626	6762	-	-	-	-	-	-
	OHL Input Shaft	(A)	215	225	(A)	345	360	(A)	455	470	(A)	710	735	-	-	-	-	-	-
	OHL Output Shaft	2200	2200	2200	2200	2200	2200	2200	2200	2200	2200	2200	2200	-	-	-	-	-	-
	Output RPM	58	29	19	58	29	19	58	29	19	58	29	19	-	-	-	-	-	-
	Input HP	3.98	2.02	1.34	4.85	2.46	1.63	5.70	3.10	2.10	5.70	3.10	2.10	-	-	-	-	-	-
59.92	Output Torque, In-Lb	4356	4359	4362	5308	5308	5306	6239	6689	6836	6239	6689	6836	-	-	-	-	-	-
	OHL Input Shaft	(A)	215	225	(A)	345	360	(A)	455	470	(A)	710	735	-	-	-	-	-	-
	OHL Output Shaft	2200	2200	2200	2200	2200	2200	2200	2200	2200	2200	2200	2200	-	-	-	-	-	-
	Output RPM	49	25	17	49	25	17	49	25	17	-	-	-	-	-	-	-	-	-
	Input HP	3.98	2.02	1.34	4.85	2.46	1.63	5.10	2.60	1.79	-	-	-	-	-	-	-	-	-
70.27	Output Torque, In-Lb	5109	5112	5116	6226	6225	6223	6547	6580	6847	-	-	-	-	-	-	-	-	-
	OHL Input Shaft	(A)	215	225	(A)	345	360	(A)	455	470	-	-	-	-	-	-	-	-	-
	OHL Output Shaft	2200	2200	2200	2200	2200	2200	2200	2200	2200	-	-	-	-	-	-	-	-	-
	Output RPM	44	23	15	44	23	15	44	23	15	-	-	-	-	-	-	-	-	-
	Input HP	3.98	2.02	1.34	4.60	2.40	1.60	4.60	2.40	1.60	-	-	-	-	-	-	-	-	-
77.54	Output Torque, In-Lb	5637	5641	5645	6516	6702	6740	6516	6702	6740	-	-	-	-	-	-	-	-	-
	OHL Input Shaft	(A)	215	225	(A)	345	360	(A)	455	470	-	-	-	-	-	-	-	-	-
	OHL Output Shaft	2200	2200	2200	2200	2200	2200	2200	2200	2200	-	-	-	-	-	-	-	-	-
	Output RPM	40	20	13	40	20	13	40	20	13	-	-	-	-	-	-	-	-	-
	Input HP	3.98	2.02	1.34	4.00	2.10	1.40	4.00	2.10	1.40	-	-	-	-	-	-	-	-	-
86.26	Output Torque, In-Lb	6272	6275	6280	6303	6524	6561	6303	6524	6561	-	-	-	-	-	-	-	-	-
	OHL Input Shaft	(A)	215	225	(A)	345	360	(A)	455	470	-	-	-	-	-	-	-	-	-
	OHL Output Shaft	2200	2200	2200	2200	2200	2200	2200	2200	2200	-	-	-	-	-	-	-	-	-

Service factor: 1.0

(A) (B) (C) - See footnotes page on inside back cover

Blank areas (-) indicate configuration not available

MSM 58

Size: MW583

Triple reduction – Clamp collar, three-piece coupled, separate

NEMA motor frame		56C			---			140TC			180TC			---			210TC		
IEC motor frame		71D			80D			90D			100			112D			132D		
Separate group		71			80			90			100			112			132		
Ratio	Output Rating data	3450	1750	1160	3450	1750	1160	3450	1750	1160	3450	1750	1160	3450	1750	1160	3450	1750	1160
	Output RPM	-	-	-	90	**46**	30	90	**46**	30	90	**46**	30	90	**46**	30	-	-	-
	Input HP	-	-	-	4.85	**2.46**	1.63	9.70	**4.98**	3.30	9.70	**4.98**	3.30	9.70	**4.98**	3.30	-	-	-
38.17	Output Torque, In-Lb	-	-	-	3381	**3381**	3380	6763	**6850**	6850	6763	**6850**	6850	6763	**6850**	6850	-	-	-
	OHL Input Shaft	-	-	-	(A)	**345**	360	(A)	**455**	470	**(A)**	**710**	735	**(A)**	**840**	875	-	-	-
	OHL Output Shaft	-	-	-	2200	**2200**	2200	2200	**2200**	2200	**2200**	**2200**	2200	**2200**	**2200**	2200	-	-	-
	Output RPM	72	**37**	24	72	**37**	24	72	**37**	24	72	**37**	24	72	**37**	24	-	-	-
	Input HP	3.98	**2.02**	1.34	4.85	**2.46**	1.63	7.80	**3.97**	2.63	7.80	**3.97**	2.63	7.80	**3.97**	2.63	-	-	-
47.88	Output Torque, In-Lb	3481	**3483**	3486	4242	**4242**	4240	6822	**6850**	6850	6822	**6850**	6850	6822	**6850**	6850	-	-	-
	OHL Input Shaft	(A)	**215**	225	(A)	**345**	360	(A)	**455**	470	**(A)**	**710**	735	**(A)**	**840**	875	-	-	-
	OHL Output Shaft	2200	**2200**	2200	2200	**2200**	2200	2200	**2200**	2200	**2200**	**2200**	2200	**2200**	**2200**	2200	-	-	-
	Output RPM	65	**33**	22	65	**33**	22	65	**33**	22	65	**33**	22	65	**33**	22	-	-	-
	Input HP	3.98	**2.02**	1.34	4.85	**2.46**	1.63	7.05	**3.58**	2.37	7.05	**3.58**	2.37	7.05	**3.58**	2.37	-	-	-
53.20	Output Torque, In-Lb	3868	**3870**	3873	4713	**4713**	4711	6850	**6850**	6850	6850	**6850**	6850	6850	**6850**	6850	-	-	-
	OHL Input Shaft	(A)	**215**	225	(A)	**345**	360	(A)	**455**	470	(A)	**710**	735	(A)	**840**	875	-	-	-
	OHL Output Shaft	2200	**2200**	2200	2200	**2200**	2200	2200	**2200**	2200	2200	**2200**	2200	2200	**2200**	2200	-	-	-
	Output RPM	56	**29**	19	56	**29**	19	56	**29**	19	56	**29**	19	56	**29**	19	-	-	-
	Input HP	3.98	**2.02**	1.34	4.85	**2.46**	1.63	6.13	**3.11**	2.06	6.13	**3.11**	2.06	6.13	**3.11**	2.06	-	-	-
61.18	Output Torque, In-Lb	4448	**4451**	4454	5420	**5420**	5418	6850	**6850**	6850	6850	**6850**	6850	6850	**6850**	6850	-	-	-
	OHL Input Shaft	(A)	**215**	225	(A)	**345**	360	(A)	**455**	470	(A)	**710**	735	(A)	**840**	875	-	-	-
	OHL Output Shaft	2200	**2200**	2200	2200	**2200**	2200	2200	**2200**	2200	2200	**2200**	2200	2200	**2200**	2200	-	-	-
	Output RPM	52	**27**	18	52	**27**	18	52	**27**	18	52	**27**	18	52	**27**	18	-	-	-
	Input HP	3.98	**2.02**	1.34	4.85	**2.46**	1.63	5.70	**2.89**	1.92	5.70	**2.89**	1.92	5.70	**2.89**	1.92	-	-	-
65.80	Output Torque, In-Lb	4784	**4787**	4790	5830	**5829**	5827	6850	**6850**	6850	6850	**6850**	6850	6850	**6850**	6850	-	-	-
	OHL Input Shaft	(A)	**215**	225	(A)	**345**	360	(A)	**455**	470	(A)	**710**	735	(A)	**840**	875	-	-	-
	OHL Output Shaft	2200	**2200**	2200	2200	**2200**	2200	2200	**2200**	2200	2200	**2200**	2200	2200	**2200**	2200	-	-	-
	Output RPM	45	**23**	15	45	**23**	15	45	**23**	15	45	**23**	15	45	**23**	15	-	-	-
	Input HP	3.98	**2.02**	1.34	4.85	**2.46**	1.63	4.89	**2.48**	1.64	4.89	**2.48**	1.64	4.89	**2.48**	1.64	-	-	-
76.67	Output Torque, In-Lb	5574	**5578**	5582	6793	**6793**	6790	6850	**6850**	6850	6850	**6850**	6850	6850	**6850**	6850	-	-	-
	OHL Input Shaft	(A)	**215**	225	(A)	**345**	360	(A)	**455**	470	(A)	**710**	735	(A)	**840**	875	-	-	-
	OHL Output Shaft	2200	**2200**	2200	2200	**2200**	2200	2200	**2200**	2200	2200	**2200**	2200	2200	**2200**	2200	-	-	-
	Output RPM	42	**21**	14	42	**21**	14	42	**21**	14	42	**21**	14	42	**21**	14	-	-	-
	Input HP	3.98	**2.02**	1.34	4.51	**2.29**	1.52	4.51	**2.29**	1.52	4.51	**2.29**	1.52	4.51	**2.29**	1.52	-	-	-
83.13	Output Torque, In-Lb	6044	**6047**	6052	6850	**6850**	6850	6850	**6850**	6850	6850	**6850**	6850	6850	**6850**	6850	-	-	-
	OHL Input Shaft	(A)	**215**	225	(A)	**345**	360	(A)	**455**	470	(A)	**710**	735	(A)	**840**	875	-	-	-
	OHL Output Shaft	2200	**2200**	2200	2200	**2200**	2200	2200	**2200**	2200	2200	**2200**	2200	2200	**2200**	2200	-	-	-
	Output RPM	38	**19**	13	38	**19**	13	38	**19**	13	38	**19**	13	38	**19**	13	-	-	-
	Input HP	3.98	**2.02**	1.34	4.15	**2.10**	1.39	4.15	**2.10**	1.39	4.15	**2.10**	1.39	4.15	**2.10**	1.39	-	-	-
90.44	Output Torque, In-Lb	6576	**6579**	6584	6850	**6850**	6850	6850	**6850**	6850	6850	**6850**	6850	6850	**6850**	6850	-	-	-
	OHL Input Shaft	(A)	**215**	225	(A)	**345**	360	(A)	**455**	470	(A)	**710**	735	(A)	**840**	875	-	-	-
	OHL Output Shaft	2200	**2200**	2200	2200	**2200**	2200	2200	**2200**	2200	2200	**2200**	2200	2200	**2200**	2200	-	-	-
	Output RPM	35	**18**	12	35	**18**	12	35	**18**	12	35	**18**	12	35	**18**	12	-	-	-
	Input HP	3.80	**1.93**	1.28	3.80	**1.93**	1.28	3.80	**1.93**	1.28	3.80	**1.93**	1.28	3.80	**1.93**	1.28	-	-	-
98.80	Output Torque, In-Lb	6850	**6850**	6850	6850	**6850**	6850	6850	**6850**	6850	6850	**6850**	6850	6850	**6850**	6850	-	-	-
	OHL Input Shaft	(A)	**215**	225	(A)	**345**	360	(A)	**455**	470	(A)	**710**	735	(A)	**840**	875	-	-	-
	OHL Output Shaft	2200	**2200**	2200	2200	**2200**	2200	2200	**2200**	2200	2200	**2200**	2200	2200	**2200**	2200	-	-	-
	Output RPM	32	**16**	11	32	**16**	11	32	**16**	11	32	**16**	11	32	**16**	11	-	-	-
	Input HP	3.46	**1.75**	1.16	3.46	**1.75**	1.16	3.46	**1.75**	1.16	3.46	**1.75**	1.16	3.46	**1.75**	1.16	-	-	-
108.45	Output Torque, In-Lb	6850	**6850**	6850	6850	**6850**	6850	6850	**6850**	6850	6850	**6850**	6850	6850	**6850**	6850	-	-	-
	OHL Input Shaft	(A)	**215**	225	(A)	**345**	360	(A)	**455**	470	(A)	**710**	735	(A)	**840**	875	-	-	-
	OHL Output Shaft	2200	**2200**	2200	2200	**2200**	2200	2200	**2200**	2200	2200	**2200**	2200	2200	**2200**	2200	-	-	-
	Output RPM	29	**15**	10	29	**15**	10	29	**15**	10	29	**15**	10	29	**15**	10	-	-	-
	Input HP	3.13	**1.59**	1.05	3.13	**1.59**	1.05	3.13	**1.59**	1.05	3.13	**1.59**	1.05	3.13	**1.59**	1.05	-	-	-
119.70	Output Torque, In-Lb	6850	**6850**	6850	6850	**6850**	6850	6850	**6850**	6850	6850	**6850**	6850	6850	**6850**	6850	-	-	-
	OHL Input Shaft	(A)	**215**	225	(A)	**345**	360	(A)	**455**	470	(A)	**710**	735	(A)	**840**	875	-	-	-
	OHL Output Shaft	2200	**2200**	2200	2200	**2200**	2200	2200	**2200**	2200	2200	**2200**	2200	2200	**2200**	2200	-	-	-

Service factor: 1.0

(A) (B) (C) - See footnotes page on inside back cover

Blank areas (-) indicate configuration not available

MSM 58

Size: MW583

Triple reduction – Clamp collar, three-piece coupled, separate

NEMA motor frame		56C			---			140TC			180TC			---			210TC		
IEC motor frame		71D			80D			90D			100			112D			132D		
Separate group		71			80			90			100			112			132		
Ratio	Output Rating data	3450	1750	1160	3450	1750	1160	3450	1750	1160	3450	1750	1160	3450	1750	1160	3450	1750	1160
	Output RPM	26	**13**	9	26	**13**	9	26	**13**	9	26	**13**	9	26	**13**	9	-	-	-
	Input HP	2.78	**1.41**	0.93	2.78	**1.41**	0.93	2.78	**1.41**	0.93	2.78	**1.41**	0.93	2.78	**1.41**	0.93	-	-	-
135.05	Output Torque, In-Lb	6850	**6850**	6850	6850	**6850**	6850	6850	**6850**	6850	6850	**6850**	6850	6850	**6850**	6850	-	-	-
	OHL Input Shaft	(A)	**215**	225	(A)	**345**	360	(A)	**455**	470	(A)	**710**	735	(A)	**840**	875	-	-	-
	OHL Output Shaft	2200	**2200**	2200	2200	**2200**	2200	2200	**2200**	2200	2200	**2200**	2200	2200	**2200**	2200	-	-	-
	Output RPM	23	**12**	8	23	**12**	8	23	**12**	8	23	**12**	8	23	**12**	8	-	-	-
	Input HP	2.52	**1.28**	0.85	2.52	**1.28**	0.85	2.52	**1.28**	0.85	2.52	**1.28**	0.85	2.52	**1.28**	0.85	-	-	-
148.52	Output Torque, In-Lb	6850	**6850**	6850	6850	**6850**	6850	6850	**6850**	6850	6850	**6850**	6850	6850	**6850**	6850	-	-	-
	OHL Input Shaft	(A)	**215**	225	(A)	**345**	360	(A)	**455**	470	(A)	**710**	735	(A)	**840**	875	-	-	-
	OHL Output Shaft	2200	**2200**	2200	2200	**2200**	2200	2200	**2200**	2200	2200	**2200**	2200	2200	**2200**	2200	-	-	-
	Output RPM	21	**11**	7	21	**11**	7	21	**11**	7	21	**11**	7	21	**11**	7	-	-	-
	Input HP	2.28	**1.16**	0.77	2.28	**1.16**	0.77	2.28	**1.16**	0.77	2.28	**1.16**	0.77	2.28	**1.16**	0.77	-	-	-
164.44	Output Torque, In-Lb	6850	**6850**	6850	6850	**6850**	6850	6850	**6850**	6850	6850	**6850**	6850	6850	**6850**	6850	-	-	-
	OHL Input Shaft	(A)	**215**	225	**(A)**	**345**	360	**(A)**	**455**	470	**(A)**	**710**	735	**(A)**	**840**	875	-	-	-
	OHL Output Shaft	2200	**2200**	2200	**2200**	**2200**	2200	**2200**	**2200**	2200	**2200**	**2200**	2200	**2200**	**2200**	2200	-	-	-
	Output RPM	18	**9**	6	18	**9**	6	18	**9**	6	18	**9**	6	18	**9**	6	-	-	-
	Input HP	1.94	**0.99**	0.65	1.94	**0.99**	0.65	1.94	**0.99**	0.65	1.94	**0.99**	0.65	1.94	**0.99**	0.65	-	-	-
192.85	Output Torque, In-Lb	6850	**6850**	6850	6850	**6850**	6850	6850	**6850**	6850	6850	**6850**	6850	6850	**6850**	6850	-	-	-
	OHL Input Shaft	(A)	**215**	225	**(A)**	**345**	360	**(A)**	**455**	470	**(A)**	**710**	735	**(A)**	**840**	875	-	-	-
	OHL Output Shaft	2200	**2200**	2200	**2200**	**2200**	2200	**2200**	**2200**	2200	**2200**	**2200**	2200	**2200**	**2200**	2200	-	-	-
	Output RPM	16	**8**	5	16	**8**	5	16	**8**	5	16	**8**	5	16	**8**	5	-	-	-
	Input HP	1.76	**0.89**	0.59	1.76	**0.89**	0.59	1.76	**0.89**	0.59	1.76	**0.89**	0.59	1.76	**0.89**	0.59	-	-	-
212.80	Output Torque, In-Lb	6850	**6850**	6850	6850	**6850**	6850	6850	**6850**	6850	6850	**6850**	6850	6850	**6850**	6850	-	-	-
	OHL Input Shaft	(A)	**215**	225	**(A)**	**345**	360	**(A)**	**455**	470	**(A)**	**710**	735	**(A)**	**840**	875	-	-	-
	OHL Output Shaft	2200	**2200**	2200	2200	**2200**	2200	2200	**2200**	2200	2200	**2200**	2200	2200	**2200**	2200	-	-	-
	Output RPM	15	**7**	5	15	**7**	5	15	**7**	5	15	**7**	5	15	**7**	5	-	-	-
	Input HP	1.58	**0.80**	0.53	1.58	**0.80**	0.53	1.58	**0.80**	0.53	1.58	**0.80**	0.53	1.58	**0.80**	0.53	-	-	-
236.74	Output Torque, In-Lb	6850	**6850**	6850	6850	**6850**	6850	6850	**6850**	6850	6850	**6850**	6850	6850	**6850**	6850	-	-	-
	OHL Input Shaft	**(A)**	**215**	225	**(A)**	**345**	360	**(A)**	**455**	470	**(A)**	**710**	735	**(A)**	**840**	875	-	-	-
	OHL Output Shaft	`	**2200**	2200	2200	**2200**	2200	2200	**2200**	2200	2200	**2200**	2200	2200	**2200**	2200	-	-	-

Service factor: 1.0

(A) (B) (C) - See footnotes page on inside back cover

Blank areas (-) indicate configuration not available

MSM 58

Size: MW582

Double reduction – Clamp collar, three-piece coupled, separate

NEMA motor frame		56C			—			140TC			180TC			—			210TC			250TC		
IEC motor frame		71D			80D			90D			100D			112D			132D			—		
Separate group		71			80			90			100			112			132			—		
Ratio	Output Rating data	3450	1750	1160	3450	1750	1160	3450	1750	1160	3450	1750	1160	3450	1750	1160	3450	1750	1160	3450	1750	1160
	Output RPM	–	–	–	–	–	–	–	–	–	519	263	174	519	263	174	519	263	174	519	263	174
	Input Hp (max) (C)	–	–	–	–	–	–	–	–	–	20.42	10.36	6.87	27.34	13.87	9.19	49.21	26.92	15.00	49.21	26.92	15.00
6.65	Output torque, in–lb	–	–	–	–	–	–	–	–	–	2481	2481	2481	3322	3322	3322	5979	6447	5420	5979	6447	5420
	OHL input shaft	–	–	–	–	–	–	–	–	–	(A)	713	742	(A)	843	877	(A)	947	994	(A)	947	994
	OHL output shaft (B)	–	–	–	–	–	–	–	–	–	(A)	2500	2500	(A)	2500	2500	(A)	2500	2500	(A)	2500	2500
	Output RPM	–	–	–	–	–	–	–	–	–	430	218	145	430	218	145	430	218	145	430	218	145
	Input Hp (max) (C)	–	–	–	–	–	–	–	–	–	20.42	10.36	6.87	27.34	13.87	9.19	45.03	25.38	14.14	45.03	25.38	14.14
8.02	Output torque, in–lb	–	–	–	–	–	–	–	–	–	2993	2993	2993	4008	4008	4008	6601	7333	6166	6601	7333	6166
	OHL input shaft	–	–	–	–	–	–	–	–	–	(A)	713	742	(A)	843	877	(A)	946	994	(A)	946	994
	OHL output shaft (B)	–	–	–	–	–	–	–	–	–	(A)	2500	2500	(A)	2500	2500	(A)	2500	2500	(A)	2500	2500
	Output RPM	–	–	–	358	182	120	358	182	120	358	182	120	358	182	120	358	182	120	358	182	120
	Input Hp (max) (C)	–	–	–	4.85	2.46	1.63	9.86	5.00	3.32	20.42	10.36	6.87	27.34	13.87	8.76	41.10	23.74	13.23	41.10	23.74	13.23
9.63	Output torque, in–lb	–	–	–	852	852	852	1735	1735	1735	3592	3592	3592	4809	4809	4583	7230	8231	6922	7230	8231	6922
	OHL input shaft	–	–	–	(A)	346	360	(A)	453	473	(A)	711	740	(A)	840	877	(A)	953	995	(A)	953	995
	OHL output shaft (B)	–	–	–	(A)	2500	2500	(A)	2500	2500	(A)	2500	2500	(A)	2500	2500	(A)	2500	2500	(A)	2500	2500
	Output RPM	–	–	–	306	155	103	306	155	103	306	155	103	306	155	103	306	155	103	306	155	103
	Input Hp (max) (C)	–	–	–	4.85	2.46	1.63	9.86	5.00	3.32	20.42	10.36	6.62	27.34	13.87	8.26	37.77	21.52	12.37	37.77	21.52	12.37
11.29	Output torque, in–lb	–	–	–	999	999	999	2034	2034	2034	4210	4210	4062	5637	5637	5068	7788	8746	7588	7788	8746	7588
	OHL input shaft	–	–	–	(A)	346	360	(A)	454	471	(A)	707	739	(A)	836	876	(A)	947	995	(A)	947	995
	OHL output shaft (B)	–	–	–	(A)	2500	2500	(A)	2500	2500	(A)	2500	2500	(A)	2500	2500	(A)	2500	2500	(A)	2500	2500
	Output RPM	–	–	–	256	130	86	256	130	86	256	130	86	256	130	86	256	130	86	256	130	86
	Input Hp (max) (C)	–	–	–	4.85	2.46	1.63	9.86	5.00	3.32	20.42	10.36	6.18	27.34	13.74	7.68	34.29	18.27	11.42	34.29	18.27	11.42
13.45	Output torque, in–lb	–	–	–	1191	1191	1191	2424	2424	2424	5018	5018	4516	6719	6656	5614	8428	8851	8346	8428	8851	8346
	OHL input shaft	–	–	–	(A)	346	360	(A)	456	474	(A)	708	739	(A)	838	876	(A)	953	995	(A)	953	995
	OHL output shaft (B)	–	–	–	2500	2500	2500	2500	2500	2500	2500	2500	2500	2500	2500	2500	2500	2500	2500	2500	2500	2500
	Output RPM	236	120	80	236	120	80	236	120	80	236	120	80	236	120	80	236	120	80	236	120	80
	Input Hp (max) (C)	3.98	2.02	1.34	4.85	2.46	1.63	9.86	5.00	3.25	20.42	10.36	5.96	27.34	13.24	7.40	32.35	16.85	11.00	32.35	16.85	11
14.59	Output torque, in–lb	1061	1061	1061	1291	1291	1291	2629	2629	2577	5442	5442	4728	7287	6958	5869	8622	8851	8720	8622	8851	8720
	OHL input shaft	(A)	218	227	(A)	346	360	(A)	456	474	(A)	712	738	(A)	828	876	(A)	954	994	(A)	954	994
	OHL output shaft (B)	2500	2500	2500	2500	2500	2500	2500	2500	2500	2500	2500	2500	2500	2500	2500	2500	2500	2500	2500	2500	2500
	Output RPM	212	107	71	212	107	71	212	107	71	212	107	71	212	107	71	212	107	71	212	107	71
	Input Hp (max) (C)	3.98	2.02	1.34	4.85	2.46	1.63	9.86	5.00	3.11	20.42	9.94	5.67	27.31	12.57	7.03	29.42	15.09	10.00	29.42	15.09	10.00
16.28	Output torque, in–lb	1184	1184	1184	1441	1441	1441	2934	2934	2749	6074	5831	5015	8124	7373	6219	8752	8851	8851	8752	8851	8851
	OHL input shaft	(A)	217	226	(A)	346	360	(A)	456	475	(A)	695	738	(A)	773	876	(A)	956	996	(A)	956	996
	OHL output shaft (B)	2500	2500	2500	2500	2500	2500	2500	2500	2500	2500	2500	2500	2500	2500	2500	2500	2500	2500	2500	2500	2500
	Output RPM	196	99	66	196	99	66	196	99	66	196	99	66	196	99	66	196	99	66	–	–	–
	Input Hp (max) (C)	3.98	2.02	1.34	4.85	2.46	1.63	9.86	5.00	3.00	19.59	9.56	5.45	25.69	12.09	6.76	27.47	13.93	9.24	–	–	–
17.64	Output torque, in–lb	1282	1282	1282	1561	1561	1561	3178	3178	2874	6312	6073	5224	8278	7682	6479	8851	8851	8851	–	–	–
	OHL input shaft	(A)	219	228	(A)	346	360	(A)	455	474	(A)	660	738	(A)	729	876	(A)	957	996	–	–	–
	OHL output shaft (B)	2500	2500	2500	2500	2500	2500	2500	2500	2500	2500	2500	2500	2500	2500	2500	2500	2500	2500	–	–	–
	Output RPM	173	88	58	173	88	58	173	88	58	173	88	58	173	88	58	173	88	58	–	–	–
	Input Hp (max) (C)	3.98	2.02	1.34	4.85	2.46	1.63	9.86	4.94	2.82	17.85	8.97	5.11	23.30	11.35	6.35	24.24	12.29	8.15	–	–	–
19.99	Output torque, in–lb	1453	1453	1453	1769	1769	1769	3602	3556	3067	6519	6456	5553	8508	8173	6894	8851	8851	8851	–	–	–
	OHL input shaft	(A)	218	227	(A)	346	360	(A)	454	474	(A)	602	738	(A)	659	875	(A)	958	997	–	–	–
	OHL output shaft (B)	2500	2500	2500	2500	2500	2500	2500	2500	2500	2500	2500	2500	2500	2500	2500	2500	2500	2500	–	–	–
	Output RPM	160	81	54	160	81	54	160	81	54	160	81	54	160	81	54	160	81	54	–	–	–
	Input Hp (max) (C)	3.98	2.02	1.34	4.85	2.46	1.63	9.86	4.76	2.72	16.87	8.63	4.92	21.95	10.96	6.13	22.50	11.41	7.56	–	–	–
21.54	Output torque, in–lb	1566	1566	1566	1906	1906	1906	3880	3688	3182	6636	6695	5759	8635	8501	7171	8851	8851	8851	–	–	–
	OHL input shaft	(A)	218	227	(A)	346	359	(A)	454	474	(A)	566	738	(A)	610	875	(A)	958	997	–	–	–
	OHL output shaft (B)	2500	2500	2500	2500	2500	2500	2500	2500	2500	2500	2500	2500	2500	2500	2500	2500	2500	2500	–	–	–
	Output RPM	148	75	50	148	75	50	148	75	50	148	75	50	148	75	50	148	75	50	–	–	–
	Input Hp (max) (C)	3.98	2.02	1.34	4.85	2.46	1.63	9.86	4.56	2.61	15.88	8.29	4.73	20.60	10.55	5.91	20.81	10.55	7.00	–	–	–
23.29	Output torque, in–lb	1693	1693	1693	2061	2061	2061	4196	3827	3301	6754	6952	5980	8763	8851	7472	8851	8851	8851	–	–	–
	OHL input shaft	(A)	217	226	(A)	345	359	(A)	454	474	(A)	525	737	(A)	556	875	(A)	958	997	–	–	–
	OHL output shaft (B)	2500	2500	2500	2500	2500	2500	2500	2500	2500	2500	2500	2500	2500	2500	2500	2500	2500	2500	–	–	–
	Output RPM	129	65	43	129	65	43	129	65	43	129	65	43	129	65	43	129	65	43	–	–	–
	Input Hp (max) (C)	3.98	2.02	1.34	4.85	2.46	1.63	9.86	5.00	3.32	11.92	7.81	5.18	11.92	7.81	5.18	11.92	7.81	5.18	–	–	–
26.75	Output torque, in–lb	1945	1945	1945	2368	2368	2368	4820	4820	4820	5828	7523	7523	5828	7523	7523	5828	7523	7523	–	–	–
	OHL input shaft	(A)	219	228	(A)	346	360	(A)	455	474	(A)	710	740	(A)	837	872	(A)	958	997	–	–	–
	OHL output shaft (B)	2500	2500	2500	2500	2500	2500	2500	2500	2500	2500	2500	2500	2500	2500	2500	2500	2500	2500	–	–	–

MSM 58

Size: MW582

Double reduction – Clamp collar, three-piece coupled, separate

NEMA motor frame		56C			—			140TC			180TC			—			210TC			250TC		
IEC motor frame		71D			80D			90D			100D			112D			132D			—		
Separate group		71			80			90			100			112			132			—		
Ratio	Output Rating data	3450	1750	1160	3450	1750	1160	3450	1750	1160	3450	1750	1160	3450	1750	1160	3450	1750	1160	3450	1750	1160
	Output RPM	117	60	40	117	60	40	117	60	40	117	60	40	117	60	40	117	60	40	–	–	–
	Input Hp (max) (C)	3.98	2.02	1.34	4.85	2.46	1.63	9.86	5.00	3.28	11.15	7.11	4.72	11.15	7.11	4.72	11.15	7.11	4.72	–	–	–
29.37	Output torque, in–lb	2135	2135	2135	2599	2599	2599	5291	5291	5232	5979	7523	7523	5979	7523	7523	5979	7523	7523	–	–	–
	OHL input shaft	(A)	219	228	(A)	346	360	(A)	454	473	(A)	712	741	(A)	839	871	(A)	958	997	–	–	–
	OHL output shaft (B)	2500	2500	2500	2500	2500	2500	2500	2500	2500	2500	2500	2500	2500	2500	2500	2500	2500	2500	–	–	–
	Output RPM	107	54	36	107	54	36	107	54	36	107	54	36	107	54	36	107	54	36	–	–	–
	Input Hp (max) (C)	3.98	2.02	1.34	4.85	2.46	1.63	9.86	5.00	3.10	10.40	6.46	4.28	10.40	6.46	4.28	10.40	6.46	4.28	–	–	–
32.34	Output torque, in–lb	2351	2351	2351	2862	2862	2862	5826	5826	5450	6142	7523	7523	6142	7523	7523	6142	7523	7523	–	–	–
	OHL input shaft	(A)	218	227	(A)	346	360	(A)	453	473	(A)	713	742	(A)	838	873	(A)	958	998	–	–	–
	OHL output shaft (B)	2500	2500	2500	2500	2500	2500	2500	2500	2500	2500	2500	2500	2500	2500	2500	2500	2500	2500	–	–	–
	Output RPM	98	50	33	98	50	33	98	50	33	98	50	33	98	50	33	98	50	33	–	–	–
	Input Hp (max) (C)	3.98	2.02	1.34	4.85	2.46	1.63	9.80	5.00	2.97	9.80	5.95	3.95	9.80	5.95	3.95	9.80	5.95	3.95	–	–	–
35.10	Output torque, in–lb	2552	2552	2552	3106	3106	3106	6283	6324	5657	6283	7523	7523	6283	7523	7523	6283	7523	7523	–	–	–
	OHL input shaft	(A)	217	226	(A)	346	360	(A)	452	473	(A)	713	742	(A)	840	875	(A)	959	998	–	–	–
	OHL output shaft (B)	2500	2500	2500	2500	2500	2500	2500	2500	2500	2500	2500	2500	2500	2500	2500	2500	2500	2500	–	–	–
	Output RPM	90	46	30	90	46	30	90	46	30	90	46	30	90	46	30	90	46	30	–	–	–
	Input Hp (max) (C)	3.87	2.02	1.34	4.85	2.46	1.63	9.21	4.94	2.83	9.21	5.46	3.62	9.21	5.46	3.62	9.21	5.46	3.62	–	–	–
38.25	Output torque, in–lb	2701	2781	2781	3386	3386	3386	6437	6808	5873	6437	7523	7523	6437	7523	7523	6437	7523	7523	–	–	–
	OHL input shaft	(A)	218	227	(A)	346	359	(A)	452	473	(A)	714	743	(A)	841	876	(A)	959	998	–	–	–
	OHL output shaft (B)	2500	2500	2500	2500	2500	2500	2500	2500	2500	2500	2500	2500	2500	2500	2500	2500	2500	2500	–	–	–
	Output RPM	82	42	28	82	42	28	82	42	28	82	42	28	82	42	28	82	42	28	–	–	–
	Input Hp (max) (C)	3.61	1.96	1.34	4.85	2.46	1.63	8.63	4.75	2.71	8.63	4.99	3.31	8.63	4.99	3.31	8.63	4.99	3.31	–	–	–
41.89	Output torque, in–lb	2760	2964	3046	3708	3708	3708	6604	7159	6177	6604	7523	7523	6604	7523	7523	6604	7523	7523	–	–	–
	OHL input shaft	(A)	218	226	(A)	345	359	(A)	454	473	(A)	714	743	(A)	842	877	(A)	959	998	–	–	–
	OHL output shaft (B)	2500	2500	2500	2500	2500	2500	2500	2500	2500	2500	2500	2500	2500	2500	2500	2500	2500	2500	–	–	–
	Output RPM	75	38	25	75	38	25	75	38	25	75	38	25	75	38	25	75	38	25	–	–	–
	Input Hp (max) (C)	3.34	1.82	1.25	4.85	2.46	1.63	8.05	4.53	2.59	8.05	4.53	3.00	8.05	4.53	3.00	8.05	4.53	3.00	–	–	–
46.14	Output torque, in–lb	2819	3028	3130	4084	4084	4084	6789	7523	6500	6789	7523	7523	6789	7523	7523	6789	7523	7523	–	–	–
	OHL input shaft	(A)	218	226	(A)	345	359	(A)	454	473	(A)	714	737	(A)	843	877	(A)	959	998	–	–	–
	OHL output shaft (B)	2500	2500	2500	2500	2500	2500	2500	2500	2500	2500	2500	2500	2500	2500	2500	2500	2500	2500	–	–	–
	Output RPM	65	33	22	65	33	22	65	33	22	65	33	22	65	33	22	–	–	–	–	–	–
	Input Hp (max) (C)	2.99	1.63	1.12	4.85	2.46	1.63	7.29	3.94	2.47	7.29	3.94	2.61	7.29	3.94	2.61	–	–	–	–	–	–
53.07	Output torque, in–lb	2900	3114	3220	4697	4697	4697	7066	7523	7111	7066	7523	7523	7066	7523	7523	–	–	–	–	–	–
	OHL input shaft	(A)	218	226	(A)	344	358	(A)	453	472	(A)	709	739	(A)	844	878	–	–	–	–	–	–
	OHL output shaft (B)	2500	2500	2500	2500	2500	2500	2500	2500	2500	2500	2500	2500	2500	2500	2500	–	–	–	–	–	–
	Output RPM	60	30	20	60	30	20	60	30	20	60	30	20	60	30	20	–	–	–	–	–	–
	Input Hp (max) (C)	2.80	1.53	1.05	4.85	2.46	1.63	6.89	3.63	2.36	6.89	3.63	2.41	6.89	3.63	2.41	–	–	–	–	–	–
57.49	Output torque, in–lb	2943	3160	3266	5088	5088	5088	7231	7523	7371	7231	7523	7523	7231	7523	7523	–	–	–	–	–	–
	OHL input shaft	(A)	218	227	(A)	343	357	(A)	453	472	(A)	711	740	(A)	844	878	–	–	–	–	–	–
	OHL output shaft (B)	2500	2500	2500	2500	2500	2500	2500	2500	2500	2500	2500	2500	2500	2500	2500	–	–	–	–	–	–
	Output RPM	54	28	18	54	28	18	54	28	18	54	28	18	–	–	–	–	–	–	–	–	–
	Input Hp (max) (C)	2.58	1.40	0.96	4.85	2.46	1.63	6.41	3.29	2.18	6.41	3.29	2.18	–	–	–	–	–	–	–	–	–
63.54	Output torque, in–lb	2993	3215	3322	5624	5624	5624	7442	7523	7523	7442	7523	7523	–	–	–	–	–	–	–	–	–
	OHL input shaft	(A)	218	227	(A)	343	356	(A)	453	472	(A)	712	741	–	–	–	–	–	–	–	–	–
	OHL output shaft (B)	2500	2500	2500	2500	2500	2500	2500	2500	2500	2500	2500	2500	–	–	–	–	–	–	–	–	–
	Output RPM	47	24	16	47	24	16	47	24	16	–	–	–	–	–	–	–	–	–	–	–	–
	Input Hp (max) (C)	2.26	1.23	0.84	4.85	2.46	1.63	5.56	2.82	1.87	–	–	–	–	–	–	–	–	–	–	–	–
74.13	Output torque, in–lb	3063	3291	3400	6561	6561	6561	7523	7523	7523	–	–	–	–	–	–	–	–	–	–	–	–
	OHL input shaft	(A)	219	227	(A)	346	360	(A)	455	474	–	–	–	–	–	–	–	–	–	–	–	–
	OHL output shaft (B)	2500	2500	2500	2500	2500	2500	2500	2500	2500	–	–	–	–	–	–	–	–	–	–	–	–
	Output RPM	42	21	14	42	21	14	42	21	14	–	–	–	–	–	–	–	–	–	–	–	–
	Input Hp (max) (C)	2.06	1.12	0.77	4.39	2.41	1.60	4.39	2.53	1.63	–	–	–	–	–	–	–	–	–	–	–	–
82.52	Output torque, in–lb	3107	3340	3449	6622	7160	7160	6622	7523	7316	–	–	–	–	–	–	–	–	–	–	–	–
	OHL input shaft	(A)	219	227	(A)	345	359	(A)	455	475	–	–	–	–	–	–	–	–	–	–	–	–
	OHL output shaft (B)	2500	2500	2500	2500	2500	2500	2500	2500	2500	–	–	–	–	–	–	–	–	–	–	–	–

Service factor: 1.0

(A) (B) (C) - See footnotes page on inside back cover

Blank areas (-) indicate configuration not available

MSM 58

Size: MW583

Triple reduction – Clamp collar, three-piece coupled, separate

NEMA motor frame		56C			—			140TC			180TC		
IEC motor frame		71D			80D			90D			100D		
Separate group		71			80			90			100		
Ratio	Output Rating data	3450	1750	1160	3450	1750	1160	3450	1750	1160	3450	1750	1160
	Output RPM	–	–	–	92	**47**	31	92	**47**	31	92	**47**	31
	Input Hp (max) **(C)**	–	–	–	4.85	**2.46**	1.63	9.86	**5.00**	3.32	10.08	**6.57**	4.35
37.41	Output torque, in–lb	–	–	–	3311	**3311**	3311	6740	**6740**	6740	6890	**8851**	8851
	OHL input shaft	–	–	–	**(A)**	**346**	360	**(A)**	**453**	471	**(A)**	**712**	743
	OHL output shaft **(B)**	–	–	–	2500	**2500**	2500	2500	**2500**	2500	2500	**2500**	2500
	Output RPM	–	–	–	77	**39**	26	77	**39**	26	77	**39**	26
	Input Hp (max) **(C)**	–	–	–	4.85	**2.46**	1.63	8.95	**5.00**	3.32	8.95	**5.47**	3.62
44.94	Output torque, in–lb	–	–	–	3978	**3978**	3978	7349	**8098**	8098	7349	**8851**	8851
	OHL input shaft	–	–	–	**(A)**	**343**	360	**(A)**	**454**	472	**(A)**	**714**	743
	OHL output shaft **(B)**	–	–	–	2500	**2500**	2500	2500	**2500**	2500	2500	**2500**	2500
	Output RPM	–	–	–	65	**33**	22	65	**33**	22	65	**33**	22
	Input Hp (max) **(C)**	–	–	–	4.85	**2.46**	1.63	8.04	**4.64**	3.08	8.04	**4.64**	3.08
52.91	Output torque, in–lb	–	–	–	4683	**4683**	4683	7771	**8851**	8851	7771	**8851**	8851
	OHL input shaft	–	–	–	**(A)**	**346**	360	**(A)**	**454**	473	**(A)**	**714**	744
	OHL output shaft **(B)**	–	–	–	2500	**2500**	2500	2500	**2500**	2500	2500	**2500**	2500
	Output RPM	58	**30**	20	58	**30**	20	58	**30**	20	58	**30**	20
	Input Hp (max) **(C)**	3.98	**2.02**	1.34	4.85	**2.46**	1.63	7.41	**4.15**	2.75	7.41	**4.15**	2.75
59.29	Output torque, in–lb	4311	**4311**	4311	5248	**5248**	5248	8024	**8851**	8851	8024	**8851**	8851
	OHL input shaft	(A)	**218**	227	**(A)**	**346**	360	**(A)**	**453**	472	**(A)**	**714**	744
	OHL output shaft **(B)**	2500	**2500**	2500	2500	**2500**	2500	2500	**2500**	2500	2500	**2500**	2500
	Output RPM	52	**26**	17	52	**26**	17	52	**26**	17	52	**26**	17
	Input Hp (max) **(C)**	3.98	**2.02**	1.34	4.85	**2.46**	1.63	6.83	**3.70**	2.45	6.83	**3.70**	2.45
66.45	Output torque, in–lb	4831	**4831**	4831	5882	**5882**	5882	8289	**8851**	8851	8289	**8851**	8851
	OHL input shaft	**(A)**	**217**	226	**(A)**	**346**	360	**(A)**	**454**	473	**(A)**	**715**	744
	OHL output shaft **(B)**	2500	**2500**	2500	2500	**2500**	2500	2500	**2500**	2500	2500	**2500**	2500
	Output RPM	48	**24**	16	48	**24**	16	48	**24**	16	48	**24**	16
	Input Hp (max) **(C)**	3.98	**2.02**	1.34	4.85	**2.46**	1.63	6.42	**3.39**	2.25	6.42	**3.39**	2.25
72.54	Output torque, in–lb	5274	**5274**	5274	6420	**6420**	6420	8503	**8851**	8851	8503	**8851**	8851
	OHL input shaft	**(A)**	**219**	228	**(A)**	**346**	360	**(A)**	**455**	474	**(A)**	**715**	744
	OHL output shaft **(B)**	2500	**2500**	2500	2500	**2500**	2500	2500	**2500**	2500	2500	**2500**	2500
	Output RPM	43	**22**	15	43	**22**	15	43	**22**	15	43	**22**	15
	Input Hp (max) **(C)**	3.98	**2.02**	1.34	4.85	**2.46**	1.63	6.01	**3.09**	2.05	6.01	**3.09**	2.05
79.63	Output torque, in–lb	5789	**5789**	5789	7048	**7048**	7048	8739	**8851**	8851	8739	**8851**	8851
	OHL input shaft	**(A)**	**219**	228	**(A)**	**346**	360	**(A)**	**456**	474	**(A)**	**715**	744
	OHL output shaft **(B)**	2500	**2500**	2500	2500	**2500**	2500	2500	**2500**	2500	2500	**2500**	2500
	Output RPM	39	**20**	13	39	**20**	13	39	**20**	13	39	**20**	13
	Input Hp (max) **(C)**	3.98	**2.02**	1.34	4.85	**2.46**	1.63	5.53	**2.80**	1.86	5.53	**2.80**	1.86
87.68	Output torque, in–lb	6375	**6375**	6375	7760	**7760**	7760	8851	**8851**	8851	8851	**8851**	8851
	OHL input shaft	**(A)**	**218**	227	**(A)**	**346**	360	**(A)**	**456**	475	**(A)**	**715**	737
	OHL output shaft **(B)**	2500	**2500**	2500	2500	**2500**	2500	2500	**2500**	2500	2500	**2500**	2500
	Output RPM	36	**18**	12	36	**18**	12	36	**18**	12	36	**18**	12
	Input Hp (max) **(C)**	3.98	**2.02**	1.34	4.85	**2.46**	1.63	5.09	**2.58**	1.71	5.09	**2.58**	1.71
95.16	Output torque, in–lb	6919	**6919**	6919	8423	**8423**	8423	8851	**8851**	8851	8851	**8851**	8851
	OHL input shaft	**(A)**	**217**	226	**(A)**	**346**	360	**(A)**	**457**	475	**(A)**	**708**	737
	OHL output shaft **(B)**	2500	**2500**	2500	2500	**2500**	2500	2500	**2500**	2500	2500	**2500**	2500
	Output RPM	33	**17**	11	33	**17**	11	33	**17**	11	33	**17**	11
	Input Hp (max) **(C)**	3.87	**2.02**	1.34	4.67	**2.37**	1.57	4.67	**2.37**	1.57	4.67	**2.37**	1.57
103.72	Output torque, in–lb	7324	**7541**	7541	8851	**8851**	8851	8851	**8851**	8851	8851	**8851**	8851
	OHL input shaft	**(A)**	**218**	227	**(A)**	**346**	360	**(A)**	**457**	475	**(A)**	**708**	738
	OHL output shaft **(B)**	2500	**2500**	2500	2500	**2500**	2500	2500	**2500**	2500	2500	**2500**	2500
	Output RPM	30	**15**	10	30	**15**	10	30	**15**	10	30	**15**	10
	Input Hp (max) **(C)**	3.61	**1.96**	1.31	4.27	**2.16**	1.43	4.27	**2.16**	1.43	4.27	**2.16**	1.43
113.59	Output torque, in–lb	7484	**8035**	8066	8851	**8851**	8851	8851	**8851**	8851	8851	**8851**	8851
	OHL input shaft	(A)	218	226	**(A)**	**346**	360	**(A)**	**457**	475	**(A)**	**710**	739
	OHL output shaft **(B)**	2500	**2500**	2500	2500	**2500**	2500	2500	**2500**	2500	2500	**2500**	2500

Service factor: 1.0

(A) (B) (C) - See footnotes page on inside back cover

Blank areas (-) indicate configuration not available

MSM 58

Size: MW583

Triple reduction – Clamp collar, three-piece coupled, separate

NEMA motor frame		56C			—			140TC			180TC		
IEC motor frame		71D			80D			90D			100D		
Separate group		71			80			90			100		
Ratio	Output Rating data	3450	1750	1160	3450	1750	1160	3450	1750	1160	3450	1750	1160
	Output RPM	28	**14**	9	28	**14**	9	28	**14**	9	28	**14**	9
	Input Hp (max) **(C)**	3.34	**1.82**	1.24	3.87	**1.96**	1.30	3.87	**1.96**	1.30	3.87	**1.96**	1.30
125.11	Output torque, in–lb	7644	**8189**	8455	8851	**8851**	8851	8851	**8851**	8851	8851	**8851**	8851
	OHL input shaft	**(A)**	**218**	226	**(A)**	**346**	360	**(A)**	**457**	475	**(A)**	**711**	741
	OHL output shaft **(B)**	2500	**2500**	2500	2500	**2500**	2500	2500	**2500**	2500	2500	**2500**	2500
	Output RPM	24	**12**	8	24	**12**	8	24	**12**	8	24	**12**	8
	Input Hp (max) **(C)**	2.99	**1.63**	1.12	3.37	**1.71**	1.13	3.37	**1.71**	1.13	3.37	**1.71**	1.13
143.88	Output torque, in–lb	7862	**8422**	8730	8851	**8851**	8851	8851	**8851**	8851	8851	**8851**	8851
	OHL input shaft	**(A)**	**218**	226	**(A)**	**346**	360	**(A)**	**457**	476	**(A)**	**712**	741
	OHL output shaft **(B)**	2500	**2500**	2500	2500	**2500**	2500	2500	**2500**	2500	2500	**2500**	2500
	Output RPM	22	**11**	7	22	**11**	7	22	**11**	7	22	**11**	7
	Input Hp (max) **(C)**	2.80	**1.52**	1.05	3.11	**1.58**	1.05	3.11	**1.58**	1.05	3.11	**1.58**	1.05
155.87	Output torque, in–lb	7979	**8546**	8851	8851	**8851**	8851	8851	**8851**	8851	8851	**8851**	8851
	OHL input shaft	**(A)**	**218**	227	**(A)**	**346**	360	**(A)**	**457**	476	**(A)**	**712**	742
	OHL output shaft **(B)**	2500	**2500**	2500	2500	**2500**	2500	2500	**2500**	2500	2500	**2500**	2500
	Output RPM	20	**10**	7	20	**10**	7	20	**10**	7	20	**10**	7
	Input Hp (max) **(C)**	2.58	**1.40**	0.95	2.81	**1.43**	0.95	2.81	**1.43**	0.95	2.81	**1.43**	0.95
172.28	Output torque, in–lb	8116	**8690**	8851	8851	**8851**	8851	8851	**8851**	8851	8851	**8851**	8851
	OHL input shaft	**(A)**	**218**	227	**(A)**	**346**	360	**(A)**	**457**	476	**(A)**	**713**	**(A)**
	OHL output shaft **(B)**	2500	**2500**	2500	2500	**2500**	2500	2500	**2500**	2500	2500	**2500**	2500
	Output RPM	17	**9**	6	17	**9**	6	17	**9**	6	–	**–**	–
	Input Hp (max) **(C)**	2.26	**1.22**	0.81	2.41	**1.22**	0.81	2.41	**1.22**	0.81	–	**–**	–
200.99	Output torque, in–lb	8306	**8851**	8851	8851	**8851**	8851	8851	**8851**	8851	–	**–**	–
	OHL input shaft	**(A)**	**219**	227	**(A)**	**346**	360	**(A)**	**457**	476	–	**–**	–
	OHL output shaft **(B)**	2500	**2500**	2500	2500	**2500**	2500	2500	**2500**	2500	–	**–**	–
	Output RPM	15	**8**	5	15	**8**	5	15	**8**	5	–	**–**	–
	Input Hp (max) **(C)**	2.06	**1.10**	0.73	2.17	**1.10**	0.73	2.17	**1.10**	0.73	–	**–**	–
223.74	Output torque, in–lb	8425	**8851**	8851	8851	**8851**	8851	8851	**8851**	8851	–	**–**	–
	OHL input shaft	**(A)**	**218**	228	**(A)**	**343**	357	**(A)**	**457**	476	–	**–**	–
	OHL output shaft **(B)**	2500	**2500**	2500	2500	**2500**	2500	2500	**2500**	2500	–	**–**	–

Service factor: 1.0

(A) (B) (C) - See footnotes page on inside back cover

Blank areas (-) indicate configuration not available

MSM 68

Size: MW682

Double reduction – Clamp collar, three-piece coupled, separate

NEMA motor frame		56C			—			140TC			180TC			—			210TC			250TC		
IEC motor frame		71D			80D			90D			100D			112D			132D			—		
Separate group		71			80			90			100			112			132			—		
Ratio	Output Rating data	3450	1750	1160	3450	1750	1160	3450	1750	1160	3450	1750	1160	3450	1750	1160	3450	1750	1160	3450	1750	1160
	Output RPM	–	–	–	–	–	–	–	–	–	519	263	174	519	263	174	519	263	174	519	263	174
	Input Hp (max) (C)	–	–	–	–	–	–	–	–	–	20.42	10.36	6.87	27.34	13.87	9.19	49.21	26.92	15.00	49.21	26.92	15.00
6.65	Output torque, in–lb	–	–	–	–	–	–	–	–	–	2481	2481	2481	3322	3322	3322	5979	6447	5420	5979	6447	5420
	OHL input shaft	–	–	–	–	–	–	–	–	–	(A)	713	742	(A)	843	877	(A)	947	994	(A)	947	994
	OHL output shaft (B)	–	–	–	–	–	–	–	–	–	(A)	2500	2500	(A)	2500	2500	(A)	2500	2500	(A)	2500	2500
	Output RPM	–	–	–	–	–	–	–	–	–	430	218	145	430	218	145	430	218	145	430	218	145
	Input Hp (max) (C)	–	–	–	–	–	–	–	–	–	20.42	10.36	6.87	27.34	13.87	9.19	45.03	25.38	14.14	45.03	25.38	14.14
8.02	Output torque, in–lb	–	–	–	–	–	–	–	–	–	2993	2993	2993	4008	4008	4008	6601	7333	6166	6601	7333	6166
	OHL input shaft	–	–	–	–	–	–	–	–	–	(A)	713	742	(A)	843	877	(A)	946	994	(A)	946	994
	OHL output shaft (B)	–	–	–	–	–	–	–	–	–	(A)	2500	2500	(A)	2500	2500	(A)	2500	2500	(A)	2500	2500
	Output RPM	–	–	–	358	182	120	358	182	120	358	182	120	358	182	120	358	182	120	358	182	120
	Input Hp (max) (C)	–	–	–	4.85	2.46	1.63	9.86	5.00	3.32	20.42	10.36	6.87	27.34	13.87	8.76	41.10	23.74	13.23	41.10	23.74	13.23
9.63	Output torque, in–lb	–	–	–	852	852	852	1735	1735	1735	3592	3592	3592	4809	4809	4583	7230	8231	6922	7230	8231	6922
	OHL input shaft	–	–	–	(A)	346	360	(A)	453	473	(A)	711	740	(A)	840	877	(A)	953	995	(A)	953	995
	OHL output shaft (B)	–	–	–	(A)	2500	2500	(A)	2500	2500	(A)	2500	2500	(A)	2500	2500	(A)	2500	2500	(A)	2500	2500
	Output RPM	–	–	–	306	155	103	306	155	103	306	155	103	306	155	103	306	155	103	306	155	103
	Input Hp (max) (C)	–	–	–	4.85	2.46	1.63	9.86	5.00	3.32	20.42	10.36	6.62	27.34	13.87	8.26	37.77	21.52	12.37	37.77	21.52	12.37
11.29	Output torque, in–lb	–	–	–	999	999	999	2034	2034	2034	4210	4210	4062	5637	5637	5068	7788	8746	7588	7788	8746	7588
	OHL input shaft	–	–	–	(A)	346	360	(A)	454	471	(A)	707	739	(A)	836	876	(A)	947	995	(A)	947	995
	OHL output shaft (B)	–	–	–	(A)	2500	2500	(A)	2500	2500	(A)	2500	2500	(A)	2500	2500	(A)	2500	2500	(A)	2500	2500
	Output RPM	–	–	–	256	130	86	256	130	86	256	130	86	256	130	86	256	130	86	256	130	86
	Input Hp (max) (C)	–	–	–	4.85	2.46	1.63	9.86	5.00	3.32	20.42	10.36	6.18	27.34	13.74	7.68	34.29	18.27	11.42	34.29	18.27	11.42
13.45	Output torque, in–lb	–	–	–	1191	1191	1191	2424	2424	2424	5018	5018	4516	6719	6656	5614	8428	8851	8346	8428	8851	8346
	OHL input shaft	–	–	–	(A)	346	360	(A)	456	474	(A)	708	739	(A)	838	876	(A)	953	995	(A)	953	995
	OHL output shaft (B)	–	–	–	2500	2500	2500	2500	2500	2500	2500	2500	2500	2500	2500	2500	2500	2500	2500	2500	2500	2500
	Output RPM	236	120	80	236	120	80	236	120	80	236	120	80	236	120	80	236	120	80	236	120	80
	Input Hp (max) (C)	3.98	2.02	1.34	4.85	2.46	1.63	9.86	5.00	3.25	20.42	10.36	5.96	27.34	13.24	7.40	32.35	16.85	11.00	32.35	16.85	11
14.59	Output torque, in–lb	1061	1061	1061	1291	1291	1291	2629	2629	2577	5442	5442	4728	7287	6958	5869	8622	8851	8720	8622	8851	8720
	OHL input shaft	(A)	218	227	(A)	346	360	(A)	456	474	(A)	712	738	(A)	828	876	(A)	954	994	(A)	954	994
	OHL output shaft (B)	2500	2500	2500	2500	2500	2500	2500	2500	2500	2500	2500	2500	2500	2500	2500	2500	2500	2500	2500	2500	2500
	Output RPM	212	107	71	212	107	71	212	107	71	212	107	71	212	107	71	212	107	71	212	107	71
	Input Hp (max) (C)	3.98	2.02	1.34	4.85	2.46	1.63	9.86	5.00	3.11	20.42	9.94	5.67	27.31	12.57	7.03	29.42	15.09	10.00	29.42	15.09	10.00
16.28	Output torque, in–lb	1184	1184	1184	1441	1441	1441	2934	2934	2749	6074	5831	5015	8124	7373	6219	8752	8851	8851	8752	8851	8851
	OHL input shaft	(A)	217	226	(A)	346	360	(A)	456	475	(A)	695	738	(A)	773	876	(A)	956	996	(A)	956	996
	OHL output shaft (B)	2500	2500	2500	2500	2500	2500	2500	2500	2500	2500	2500	2500	2500	2500	2500	2500	2500	2500	2500	2500	2500
	Output RPM	196	99	66	196	99	66	196	99	66	196	99	66	196	99	66	196	99	66	–	–	–
	Input Hp (max) (C)	3.98	2.02	1.34	4.85	2.46	1.63	9.86	5.00	3.00	19.59	9.56	5.45	25.69	12.09	6.76	27.47	13.93	9.24	–	–	–
17.64	Output torque, in–lb	1282	1282	1282	1561	1561	1561	3178	3178	2874	6312	6073	5224	8278	7682	6479	8851	8851	8851	–	–	–
	OHL input shaft	(A)	219	228	(A)	346	360	(A)	455	474	(A)	660	738	(A)	729	876	(A)	957	996	–	–	–
	OHL output shaft (B)	2500	2500	2500	2500	2500	2500	2500	2500	2500	2500	2500	2500	2500	2500	2500	2500	2500	2500	–	–	–
	Output RPM	173	88	58	173	88	58	173	88	58	173	88	58	173	88	58	173	88	58	–	–	–
	Input Hp (max) (C)	3.98	2.02	1.34	4.85	2.46	1.63	9.86	4.94	2.82	17.85	8.97	5.11	23.30	11.35	6.35	24.24	12.29	8.15	–	–	–
19.99	Output torque, in–lb	1453	1453	1453	1769	1769	1769	3602	3556	3067	6519	6456	5553	8508	8173	6894	8851	8851	8851	–	–	–
	OHL input shaft	(A)	218	227	(A)	346	360	(A)	454	474	(A)	602	738	(A)	659	875	(A)	958	997	–	–	–
	OHL output shaft (B)	2500	2500	2500	2500	2500	2500	2500	2500	2500	2500	2500	2500	2500	2500	2500	2500	2500	2500	–	–	–
	Output RPM	160	81	54	160	81	54	160	81	54	160	81	54	160	81	54	160	81	54	–	–	–
	Input Hp (max) (C)	3.98	2.02	1.34	4.85	2.46	1.63	9.86	4.76	2.72	16.87	8.63	4.92	21.95	10.96	6.13	22.50	11.41	7.56	–	–	–
21.54	Output torque, in–lb	1566	1566	1566	1906	1906	1906	3880	3688	3182	6636	6695	5759	8635	8501	7171	8851	8851	8851	–	–	–
	OHL input shaft	(A)	218	227	(A)	346	359	(A)	454	474	(A)	566	738	(A)	610	875	(A)	958	997	–	–	–
	OHL output shaft (B)	2500	2500	2500	2500	2500	2500	2500	2500	2500	2500	2500	2500	2500	2500	2500	2500	2500	2500	–	–	–
	Output RPM	148	75	50	148	75	50	148	75	50	148	75	50	148	75	50	148	75	50	–	–	–
	Input Hp (max) (C)	3.98	2.02	1.34	4.85	2.46	1.63	9.86	4.56	2.61	15.88	8.29	4.73	20.60	10.55	5.91	20.81	10.55	7.00	–	–	–
23.29	Output torque, in–lb	1693	1693	1693	2061	2061	2061	4196	3827	3301	6754	6952	5980	8763	8851	7472	8851	8851	8851	–	–	–
	OHL input shaft	(A)	217	226	(A)	345	359	(A)	454	474	(A)	525	737	(A)	556	875	(A)	958	997	–	–	–
	OHL output shaft (B)	2500	2500	2500	2500	2500	2500	2500	2500	2500	2500	2500	2500	2500	2500	2500	2500	2500	2500	–	–	–
	Output RPM	129	65	43	129	65	43	129	65	43	129	65	43	129	65	43	129	65	43	–	–	–
	Input Hp (max) (C)	3.98	2.02	1.34	4.85	2.46	1.63	9.86	5.00	3.32	11.92	7.81	5.18	11.92	7.81	5.18	11.92	7.81	5.18	–	–	–
26.75	Output torque, in–lb	1945	1945	1945	2368	2368	2368	4820	4820	4820	5828	7523	7523	5828	7523	7523	5828	7523	7523	–	–	–
	OHL input shaft	(A)	219	228	(A)	346	360	(A)	455	474	(A)	710	740	(A)	837	872	(A)	958	997	–	–	–
	OHL output shaft (B)	2500	2500	2500	2500	2500	2500	2500	2500	2500	2500	2500	2500	2500	2500	2500	2500	2500	2500	–	–	–

MSM 68

Size: MW682

Double reduction – Clamp collar, three-piece coupled, separate

NEMA motor frame		56C			—			140TC			180TC			—			210TC			250TC		
IEC motor frame		71D			80D			90D			100D			112D			132D			—		
Separate group		71			80			90			100			112			132			—		
Ratio	Output Rating data	3450	1750	1160	3450	1750	1160	3450	1750	1160	3450	1750	1160	3450	1750	1160	3450	1750	1160	3450	1750	1160
	Output RPM	117	**60**	40	117	**60**	40	117	**60**	40	117	**60**	40	117	**60**	40	117	**60**	40	–	–	–
	Input Hp (max) **(C)**	3.98	**2.02**	1.34	4.85	**2.46**	1.63	9.86	**5.00**	3.28	11.15	**7.11**	4.72	11.15	**7.11**	4.72	11.15	**7.11**	4.72	–	–	–
29.37	Output torque, in–lb	2135	**2135**	2135	2599	**2599**	2599	5291	**5291**	5232	5979	**7523**	7523	5979	**7523**	7523	5979	**7523**	7523	–	–	–
	OHL input shaft	**(A)**	**219**	228	**(A)**	**346**	360	**(A)**	**454**	473	**(A)**	**712**	741	**(A)**	**839**	871	**(A)**	**958**	997	–	–	–
	OHL output shaft **(B)**	2500	**2500**	2500	2500	**2500**	2500	2500	**2500**	2500	2500	**2500**	2500	2500	**2500**	2500	2500	**2500**	2500	–	–	–
	Output RPM	107	**54**	36	107	**54**	36	107	**54**	36	107	**54**	36	107	**54**	36	107	**54**	36	–	–	–
	Input Hp (max) **(C)**	3.98	**2.02**	1.34	4.85	**2.46**	1.63	9.86	**5.00**	3.10	10.40	**6.46**	4.28	10.40	**6.46**	4.28	10.40	**6.46**	4.28	–	–	–
32.34	Output torque, in–lb	2351	**2351**	2351	2862	**2862**	2862	5826	**5826**	5450	6142	**7523**	7523	6142	**7523**	7523	6142	**7523**	7523	–	–	–
	OHL input shaft	**(A)**	**218**	227	**(A)**	**346**	360	**(A)**	**453**	473	**(A)**	**713**	742	**(A)**	**838**	873	**(A)**	**958**	998	–	–	–
	OHL output shaft **(B)**	2500	**2500**	2500	2500	**2500**	2500	2500	**2500**	2500	2500	**2500**	2500	2500	**2500**	2500	2500	**2500**	2500	–	–	–
	Output RPM	98	**50**	33	98	**50**	33	98	**50**	33	98	**50**	33	98	**50**	33	98	**50**	33	–	–	–
	Input Hp (max) **(C)**	3.98	**2.02**	1.34	4.85	**2.46**	1.63	9.80	**5.00**	2.97	9.80	**5.95**	3.95	9.80	**5.95**	3.95	9.80	**5.95**	3.95	–	–	–
35.10	Output torque, in–lb	2552	**2552**	2552	3106	**3106**	3106	6283	**6324**	5657	6283	**7523**	7523	6283	**7523**	7523	6283	**7523**	7523	–	–	–
	OHL input shaft	(A)	217	226	**(A)**	**346**	360	**(A)**	**452**	473	**(A)**	**713**	742	**(A)**	**840**	875	**(A)**	**959**	998	–	–	–
	OHL output shaft **(B)**	2500	**2500**	2500	2500	**2500**	2500	2500	**2500**	2500	2500	**2500**	2500	2500	**2500**	2500	2500	**2500**	2500	–	–	–
	Output RPM	90	**46**	30	90	**46**	30	90	**46**	30	90	**46**	30	90	**46**	30	90	**46**	30	–	–	–
	Input Hp (max) **(C)**	3.87	**2.02**	1.34	4.85	**2.46**	1.63	9.21	**4.94**	2.83	9.21	**5.46**	3.62	9.21	**5.46**	3.62	9.21	**5.46**	3.62	–	–	–
38.25	Output torque, in–lb	2701	**2781**	2781	3386	**3386**	3386	6437	**6808**	5873	6437	**7523**	7523	6437	**7523**	7523	6437	**7523**	7523	–	–	–
	OHL input shaft	**(A)**	**218**	227	**(A)**	**346**	359	**(A)**	**452**	473	**(A)**	**714**	743	**(A)**	**841**	876	**(A)**	**959**	998	–	–	–
	OHL output shaft **(B)**	2500	**2500**	2500	2500	**2500**	2500	2500	**2500**	2500	2500	**2500**	2500	2500	**2500**	2500	2500	**2500**	2500	–	–	–
	Output RPM	82	**42**	28	82	**42**	28	82	**42**	28	82	**42**	28	82	**42**	28	82	**42**	28	–	–	–
	Input Hp (max) **(C)**	3.61	**1.96**	1.34	4.85	**2.46**	1.63	8.63	**4.75**	2.71	8.63	**4.99**	3.31	8.63	**4.99**	3.31	8.63	**4.99**	3.31	–	–	–
41.89	Output torque, in–lb	2760	**2964**	3046	3708	**3708**	3708	6604	**7159**	6177	6604	**7523**	7523	6604	**7523**	7523	6604	**7523**	7523	–	–	–
	OHL input shaft	**(A)**	**218**	226	**(A)**	**345**	359	**(A)**	**454**	473	**(A)**	**714**	743	**(A)**	**842**	877	**(A)**	**959**	998	–	–	–
	OHL output shaft **(B)**	2500	**2500**	2500	2500	**2500**	2500	2500	**2500**	2500	2500	**2500**	2500	2500	**2500**	2500	2500	**2500**	2500	–	–	–
	Output RPM	75	**38**	25	75	**38**	25	75	**38**	25	75	**38**	25	75	**38**	25	75	**38**	25	–	–	–
	Input Hp (max) **(C)**	3.34	**1.82**	1.25	4.85	**2.46**	1.63	8.05	**4.53**	2.59	8.05	**4.53**	3.00	8.05	**4.53**	3.00	8.05	**4.53**	3.00	–	–	–
46.14	Output torque, in–lb	2819	**3028**	3130	4084	**4084**	4084	6789	**7523**	6500	6789	**7523**	7523	6789	**7523**	7523	6789	**7523**	7523	–	–	–
	OHL input shaft	**(A)**	**218**	226	**(A)**	**345**	359	**(A)**	**454**	473	**(A)**	**714**	737	**(A)**	**843**	877	**(A)**	**959**	998	–	–	–
	OHL output shaft **(B)**	2500	**2500**	2500	2500	**2500**	2500	2500	**2500**	2500	2500	**2500**	2500	2500	**2500**	2500	2500	**2500**	2500	–	–	–
	Output RPM	65	**33**	22	65	**33**	22	65	**33**	22	65	**33**	22	65	**33**	22	–	–	–	–	–	–
	Input Hp (max) **(C)**	2.99	**1.63**	1.12	4.85	**2.46**	1.63	7.29	**3.94**	2.47	7.29	**3.94**	2.61	7.29	**3.94**	2.61	–	–	–	–	–	–
53.07	Output torque, in–lb	2900	**3114**	3220	4697	**4697**	4697	7066	**7523**	7111	7066	**7523**	7523	7066	**7523**	7523	–	–	–	–	–	–
	OHL input shaft	**(A)**	**218**	226	**(A)**	**344**	358	**(A)**	**453**	472	**(A)**	**709**	739	**(A)**	**844**	878	–	–	–	–	–	–
	OHL output shaft **(B)**	2500	**2500**	2500	2500	**2500**	2500	2500	**2500**	2500	2500	**2500**	2500	2500	**2500**	2500	–	–	–	–	–	–
	Output RPM	60	**30**	20	60	**30**	20	60	**30**	20	60	**30**	20	60	**30**	20	–	–	–	–	–	–
	Input Hp (max) **(C)**	2.80	**1.53**	1.05	4.85	**2.46**	1.63	6.89	**3.63**	2.36	6.89	**3.63**	2.41	6.89	**3.63**	2.41	–	–	–	–	–	–
57.49	Output torque, in–lb	2943	**3160**	3266	5088	**5088**	5088	7231	**7523**	7371	7231	**7523**	7523	7231	**7523**	7523	–	–	–	–	–	–
	OHL input shaft	**(A)**	**218**	227	**(A)**	**343**	357	**(A)**	**453**	472	**(A)**	**711**	740	**(A)**	**844**	878	–	–	–	–	–	–
	OHL output shaft **(B)**	2500	**2500**	2500	2500	**2500**	2500	2500	**2500**	2500	2500	**2500**	2500	2500	**2500**	2500	–	–	–	–	–	–
	Output RPM	54	**28**	18	54	**28**	18	54	**28**	18	54	**28**	18	–	–	–	–	–	–	–	–	–
	Input Hp (max) **(C)**	2.58	**1.40**	0.96	4.85	**2.46**	1.63	6.41	**3.29**	2.18	6.41	**3.29**	2.18	–	–	–	–	–	–	–	–	–
63.54	Output torque, in–lb	2993	**3215**	3322	5624	**5624**	5624	7442	**7523**	7523	7442	**7523**	7523	–	–	–	–	–	–	–	–	–
	OHL input shaft	**(A)**	**218**	227	**(A)**	**343**	356	**(A)**	**453**	472	**(A)**	**712**	741	–	–	–	–	–	–	–	–	–
	OHL output shaft **(B)**	2500	**2500**	2500	2500	**2500**	2500	2500	**2500**	2500	2500	**2500**	2500	–	–	–	–	–	–	–	–	–
	Output RPM	47	**24**	16	47	**24**	16	47	**24**	16	–	–	–	–	–	–	–	–	–	–	–	–
	Input Hp (max) **(C)**	2.26	**1.23**	0.84	4.85	**2.46**	1.63	5.56	**2.82**	1.87	–	–	–	–	–	–	–	–	–	–	–	–
74.13	Output torque, in–lb	3063	**3291**	3400	6561	**6561**	6561	7523	**7523**	7523	–	–	–	–	–	–	–	–	–	–	–	–
	OHL input shaft	**(A)**	**219**	227	**(A)**	**346**	360	**(A)**	**455**	474	–	–	–	–	–	–	–	–	–	–	–	–
	OHL output shaft **(B)**	2500	**2500**	2500	2500	**2500**	2500	2500	**2500**	2500	–	–	–	–	–	–	–	–	–	–	–	–
	Output RPM	42	**21**	14	42	**21**	14	42	**21**	14	–	–	–	–	–	–	–	–	–	–	–	–
	Input Hp (max) **(C)**	2.06	**1.12**	0.77	4.39	**2.41**	1.60	4.39	**2.53**	1.63	–	–	–	–	–	–	–	–	–	–	–	–
82.52	Output torque, in–lb	3107	**3340**	3449	6622	**7160**	7160	6622	**7523**	7316	–	–	–	–	–	–	–	–	–	–	–	–
	OHL input shaft	**(A)**	**219**	227	**(A)**	**345**	359	**(A)**	**455**	475	–	–	–	–	–	–	–	–	–	–	–	–
	OHL output shaft **(B)**	2500	**2500**	2500	2500	**2500**	2500	2500	**2500**	2500	–	–	–	–	–	–	–	–	–	–	–	–

Service factor: 1.0

(A) (B) (C) - See footnotes page on inside back cover

Blank areas (-) indicate configuration not available

MSM 68

Size: MW683

Triple reduction – Clamp collar, three-piece coupled, separate

NEMA motor frame		56C			—			140TC			180TC		
IEC motor frame		71D			80D			90D			100D		
Separate group		71			80			90			100		
Ratio	Output Rating data	3450	1750	1160	3450	1750	1160	3450	1750	1160	3450	1750	1160
	Output RPM	–	–	–	92	**47**	31	92	**47**	31	92	**47**	31
	Input Hp (max) **(C)**	–	–	–	4.85	**2.46**	1.63	9.86	**5.00**	3.32	10.08	**6.57**	4.35
37.41	Output torque, in–lb	–	–	–	3311	**3311**	3311	6740	**6740**	6740	6890	**8851**	8851
	OHL input shaft	–	–	–	**(A)**	**346**	360	**(A)**	**453**	471	**(A)**	**712**	743
	OHL output shaft **(B)**	–	–	–	2500	**2500**	2500	2500	**2500**	2500	2500	**2500**	2500
	Output RPM	–	–	–	77	**39**	26	77	**39**	26	77	**39**	26
	Input Hp (max) **(C)**	–	–	–	4.85	**2.46**	1.63	8.95	**5.00**	3.32	8.95	**5.47**	3.62
44.94	Output torque, in–lb	–	–	–	3978	**3978**	3978	7349	**8098**	8098	7349	**8851**	8851
	OHL input shaft	–	–	–	**(A)**	**343**	360	**(A)**	**454**	472	**(A)**	**714**	743
	OHL output shaft **(B)**	–	–	–	2500	**2500**	2500	2500	**2500**	2500	2500	**2500**	2500
	Output RPM	–	–	–	65	**33**	22	65	**33**	22	65	**33**	22
	Input Hp (max) **(C)**	–	–	–	4.85	**2.46**	1.63	8.04	**4.64**	3.08	8.04	**4.64**	3.08
52.91	Output torque, in–lb	–	–	–	4683	**4683**	4683	7771	**8851**	8851	7771	**8851**	8851
	OHL input shaft	–	–	–	**(A)**	**346**	360	**(A)**	**454**	473	**(A)**	**714**	744
	OHL output shaft **(B)**	–	–	–	2500	**2500**	2500	2500	**2500**	2500	2500	**2500**	2500
	Output RPM	58	**30**	20	58	**30**	20	58	**30**	20	58	**30**	20
	Input Hp (max) **(C)**	3.98	**2.02**	1.34	4.85	**2.46**	1.63	7.41	**4.15**	2.75	7.41	**4.15**	2.75
59.29	Output torque, in–lb	4311	**4311**	4311	5248	**5248**	5248	8024	**8851**	8851	8024	**8851**	8851
	OHL input shaft	(A)	**218**	227	**(A)**	**346**	360	**(A)**	**453**	472	**(A)**	**714**	744
	OHL output shaft **(B)**	2500	**2500**	2500	2500	**2500**	2500	2500	**2500**	2500	2500	**2500**	2500
	Output RPM	52	**26**	17	52	**26**	17	52	**26**	17	52	**26**	17
	Input Hp (max) **(C)**	3.98	**2.02**	1.34	4.85	**2.46**	1.63	6.83	**3.70**	2.45	6.83	**3.70**	2.45
66.45	Output torque, in–lb	4831	**4831**	4831	5882	**5882**	5882	8289	**8851**	8851	8289	**8851**	8851
	OHL input shaft	**(A)**	**217**	226	**(A)**	**346**	360	**(A)**	**454**	473	**(A)**	**715**	744
	OHL output shaft **(B)**	2500	**2500**	2500	2500	**2500**	2500	2500	**2500**	2500	2500	**2500**	2500
	Output RPM	48	**24**	16	48	**24**	16	48	**24**	16	48	**24**	16
	Input Hp (max) **(C)**	3.98	**2.02**	1.34	4.85	**2.46**	1.63	6.42	**3.39**	2.25	6.42	**3.39**	2.25
72.54	Output torque, in–lb	5274	**5274**	5274	6420	**6420**	6420	8503	**8851**	8851	8503	**8851**	8851
	OHL input shaft	**(A)**	**219**	228	**(A)**	**346**	360	**(A)**	**455**	474	**(A)**	**715**	744
	OHL output shaft **(B)**	2500	**2500**	2500	2500	**2500**	2500	2500	**2500**	2500	2500	**2500**	2500
	Output RPM	43	**22**	15	43	**22**	15	43	**22**	15	43	**22**	15
	Input Hp (max) **(C)**	3.98	**2.02**	1.34	4.85	**2.46**	1.63	6.01	**3.09**	2.05	6.01	**3.09**	2.05
79.63	Output torque, in–lb	5789	**5789**	5789	7048	**7048**	7048	8739	**8851**	8851	8739	**8851**	8851
	OHL input shaft	**(A)**	**219**	228	**(A)**	**346**	360	**(A)**	**456**	474	**(A)**	**715**	744
	OHL output shaft **(B)**	2500	**2500**	2500	2500	**2500**	2500	2500	**2500**	2500	2500	**2500**	2500
	Output RPM	39	**20**	13	39	**20**	13	39	**20**	13	39	**20**	13
	Input Hp (max) **(C)**	3.98	**2.02**	1.34	4.85	**2.46**	1.63	5.53	**2.80**	1.86	5.53	**2.80**	1.86
87.68	Output torque, in–lb	6375	**6375**	6375	7760	**7760**	7760	8851	**8851**	8851	8851	**8851**	8851
	OHL input shaft	**(A)**	**218**	227	**(A)**	**346**	360	**(A)**	**456**	475	**(A)**	**715**	737
	OHL output shaft **(B)**	2500	**2500**	2500	2500	**2500**	2500	2500	**2500**	2500	2500	**2500**	2500
	Output RPM	36	**18**	12	36	**18**	12	36	**18**	12	36	**18**	12
	Input Hp (max) **(C)**	3.98	**2.02**	1.34	4.85	**2.46**	1.63	5.09	**2.58**	1.71	5.09	**2.58**	1.71
95.16	Output torque, in–lb	6919	**6919**	6919	8423	**8423**	8423	8851	**8851**	8851	8851	**8851**	8851
	OHL input shaft	**(A)**	**217**	226	**(A)**	**346**	360	**(A)**	**457**	475	**(A)**	**708**	737
	OHL output shaft **(B)**	2500	**2500**	2500	2500	**2500**	2500	2500	**2500**	2500	2500	**2500**	2500
	Output RPM	33	**17**	11	33	**17**	11	33	**17**	11	33	**17**	11
	Input Hp (max) **(C)**	3.87	**2.02**	1.34	4.67	**2.37**	1.57	4.67	**2.37**	1.57	4.67	**2.37**	1.57
103.72	Output torque, in–lb	7324	**7541**	7541	8851	**8851**	8851	8851	**8851**	8851	8851	**8851**	8851
	OHL input shaft	**(A)**	**218**	227	**(A)**	**346**	360	**(A)**	**457**	475	**(A)**	**708**	738
	OHL output shaft **(B)**	2500	**2500**	2500	2500	**2500**	2500	2500	**2500**	2500	2500	**2500**	2500
	Output RPM	30	**15**	10	30	**15**	10	30	**15**	10	30	**15**	10
	Input Hp (max) **(C)**	3.61	**1.96**	1.31	4.27	**2.16**	1.43	4.27	**2.16**	1.43	4.27	**2.16**	1.43
113.59	Output torque, in–lb	7484	**8035**	8066	8851	**8851**	8851	8851	**8851**	8851	8851	**8851**	8851
	OHL input shaft	(A)	218	226	**(A)**	**346**	360	**(A)**	**457**	475	**(A)**	**710**	739
	OHL output shaft **(B)**	2500	**2500**	2500	2500	**2500**	2500	2500	**2500**	2500	2500	**2500**	2500

Service factor: 1.0

(A) (B) (C) - See footnotes page on inside back cover

Blank areas (-) indicate configuration not available

MSM 68

Size: MW683

Triple reduction – Clamp collar, three-piece coupled, separate

NEMA motor frame		56C			—			140TC			180TC		
IEC motor frame		71D			80D			90D			100D		
Separate group		71			80			90			100		
Ratio	Output Rating data	3450	1750	1160	3450	1750	1160	3450	1750	1160	3450	1750	1160
	Output RPM	28	**14**	9	28	**14**	9	28	**14**	9	28	**14**	9
	Input Hp (max) **(C)**	3.34	**1.82**	1.24	3.87	**1.96**	1.30	3.87	**1.96**	1.30	3.87	**1.96**	1.30
125.11	Output torque, in–lb	7644	**8189**	8455	8851	**8851**	8851	8851	**8851**	8851	8851	**8851**	8851
	OHL input shaft	**(A)**	**218**	226	**(A)**	**346**	360	**(A)**	**457**	475	**(A)**	**711**	741
	OHL output shaft **(B)**	2500	**2500**	2500	2500	**2500**	2500	2500	**2500**	2500	2500	**2500**	2500
	Output RPM	24	**12**	8	24	**12**	8	24	**12**	8	24	**12**	8
	Input Hp (max) **(C)**	2.99	**1.63**	1.12	3.37	**1.71**	1.13	3.37	**1.71**	1.13	3.37	**1.71**	1.13
143.88	Output torque, in–lb	7862	**8422**	8730	8851	**8851**	8851	8851	**8851**	8851	8851	**8851**	8851
	OHL input shaft	**(A)**	**218**	226	**(A)**	**346**	360	**(A)**	**457**	476	**(A)**	**712**	741
	OHL output shaft **(B)**	2500	**2500**	2500	2500	**2500**	2500	2500	**2500**	2500	2500	**2500**	2500
	Output RPM	22	**11**	7	22	**11**	7	22	**11**	7	22	**11**	7
	Input Hp (max) **(C)**	2.80	**1.52**	1.05	3.11	**1.58**	1.05	3.11	**1.58**	1.05	3.11	**1.58**	1.05
155.87	Output torque, in–lb	7979	**8546**	8851	8851	**8851**	8851	8851	**8851**	8851	8851	**8851**	8851
	OHL input shaft	**(A)**	**218**	227	**(A)**	**346**	360	**(A)**	**457**	476	**(A)**	**712**	742
	OHL output shaft **(B)**	2500	**2500**	2500	2500	**2500**	2500	2500	**2500**	2500	2500	**2500**	2500
	Output RPM	20	**10**	7	20	**10**	7	20	**10**	7	20	**10**	7
	Input Hp (max) **(C)**	2.58	**1.40**	0.95	2.81	**1.43**	0.95	2.81	**1.43**	0.95	2.81	**1.43**	0.95
172.28	Output torque, in–lb	8116	**8690**	8851	8851	**8851**	8851	8851	**8851**	8851	8851	**8851**	8851
	OHL input shaft	**(A)**	**218**	227	**(A)**	**346**	360	**(A)**	**457**	476	**(A)**	**713**	**(A)**
	OHL output shaft **(B)**	2500	**2500**	2500	2500	**2500**	2500	2500	**2500**	2500	2500	**2500**	2500
	Output RPM	17	**9**	6	17	**9**	6	17	**9**	6	–	**–**	–
	Input Hp (max) **(C)**	2.26	**1.22**	0.81	2.41	**1.22**	0.81	2.41	**1.22**	0.81	–	**–**	–
200.99	Output torque, in–lb	8306	**8851**	8851	8851	**8851**	8851	8851	**8851**	8851	–	**–**	–
	OHL input shaft	**(A)**	**219**	227	**(A)**	**346**	360	**(A)**	**457**	476	–	**–**	–
	OHL output shaft **(B)**	2500	**2500**	2500	2500	**2500**	2500	2500	**2500**	2500	–	**–**	–
	Output RPM	15	**8**	5	15	**8**	5	15	**8**	5	–	**–**	–
	Input Hp (max) **(C)**	2.06	**1.10**	0.73	2.17	**1.10**	0.73	2.17	**1.10**	0.73	–	**–**	–
223.74	Output torque, in–lb	8425	**8851**	8851	8851	**8851**	8851	8851	**8851**	8851	–	**–**	–
	OHL input shaft	**(A)**	**218**	228	**(A)**	**343**	357	**(A)**	**457**	476	–	**–**	–
	OHL output shaft **(B)**	2500	**2500**	2500	2500	**2500**	2500	2500	**2500**	2500	–	**–**	–

Service factor: 1.0

(A) (B) (C) - See footnotes page on inside back cover

Blank areas (-) indicate configuration not available

MSM 68

Size: MW684

Four-stage reduction – Clamp collar, three-piece coupled, separate

NEMA motor frame		56C			—			140TC			180TC		
IEC motor frame		71D			80D			90D			100D		
Separate group		71			80			90			100		
Ratio	Output Rating data	3450	1750	1160	3450	1750	1160	3450	1750	1160	3450	1750	1160
	Output RPM	13.45	**6.82**	4.56	13.45	**6.82**	4.56	13.45	**6.82**	4.56	13.45	**6.82**	4.56
	Input Hp (max) **(C)**	1.89	**0.96**	0.64	1.89	**0.96**	0.64	1.89	**0.96**	0.64	1.89	**0.96**	0.64
256.48	Output torque, in–lb	8851	**8851**	8851	8851	**8851**	8851	8851	**8851**	8851	8851	**8851**	8851
	OHL input shaft	(A)	(A)	(A)	(A)	(A)	(A)	(A)	(A)	(A)	(A)	(A)	(A)
	OHL output shaft **(B)**	2500	**2500**	2500	2500	**2500**	2500	2500	**2500**	2500	2500	**2500**	2500
	Output RPM	12.59	**6.39**	4.27	12.59	**6.39**	4.27	12.59	**6.39**	4.27	12.59	**6.39**	4.27
	Input Hp (max) **(C)**	1.77	**0.90**	0.60	1.77	**0.90**	0.60	1.77	**0.90**	0.60	1.77	**0.90**	0.60
273.93	Output torque, in–lb	8851	**8851**	8851	8851	**8851**	8851	8851	**8851**	8851	8851	**8851**	8851
	OHL input shaft	(A)	(A)	(A)	(A)	(A)	(A)	(A)	(A)	(A)	(A)	(A)	(A)
	OHL output shaft **(B)**	2500	**2500**	2500	2500	**2500**	2500	2500	**2500**	2500	2500	**2500**	2500
	Output RPM	12.31	**6.24**	4.17	12.31	**6.24**	4.17	12.31	**6.24**	4.17	12.31	**6.24**	4.17
	Input Hp (max) **(C)**	1.73	**0.88**	0.59	1.73	**0.88**	0.59	1.73	**0.88**	0.59	1.73	**0.88**	0.59
280.25	Output torque, in–lb	8851	**8851**	8851	8851	**8851**	8851	8851	**8851**	8851	8851	**8851**	8851
	OHL input shaft	(A)	(A)	(A)	(A)	(A)	(A)	(A)	(A)	(A)	(A)	(A)	(A)
	OHL output shaft **(B)**	2500	**2500**	2500	2500	**2500**	2500	2500	**2500**	2500	2500	**2500**	2500
	Output RPM	11.70	**5.93**	3.97	11.70	**5.93**	3.97	11.70	**5.93**	3.97	11.70	**5.93**	3.97
	Input Hp (max) **(C)**	1.64	**0.83**	0.56	1.64	**0.83**	0.56	1.64	**0.83**	0.56	1.64	**0.83**	0.56
294.95	Output torque, in–lb	8851	**8851**	8851	8851	**8851**	8851	8851	**8851**	8851	8851	**8851**	8851
	OHL input shaft	(A)	(A)	(A)	(A)	(A)	(A)	(A)	(A)	(A)	(A)	(A)	(A)
	OHL output shaft **(B)**	2500	**2500**	2500	2500	**2500**	2500	2500	**2500**	2500	2500	**2500**	2500
	Output RPM	10.70	**5.43**	3.63	10.70	**5.43**	3.63	10.70	**5.43**	3.63	10.70	**5.43**	3.63
	Input Hp (max) **(C)**	1.50	**0.76**	0.51	1.50	**0.76**	0.51	1.50	**0.76**	0.51	1.50	**0.76**	0.51
322.29	Output torque, in–lb	8851	**8851**	8851	8851	**8851**	8851	8851	**8851**	8851	8851	**8851**	8851
	OHL input shaft	(A)	(A)	(A)	(A)	(A)	(A)	(A)	(A)	(A)	(A)	(A)	(A)
	OHL output shaft **(B)**	2500	**2500**	2500	2500	**2500**	2500	2500	**2500**	2500	2500	**2500**	2500
	Output RPM	9.59	**4.87**	3.25	9.59	**4.87**	3.25	9.59	**4.87**	3.25	9.59	**4.87**	3.25
	Input Hp (max) **(C)**	1.35	**0.68**	0.46	1.35	**0.68**	0.46	1.35	**0.68**	0.46	1.35	**0.68**	0.46
359.70	Output torque, in–lb	8851	**8851**	8851	8851	**8851**	8851	8851	**8851**	8851	8851	**8851**	8851
	OHL input shaft	(A)	(A)	(A)	(A)	(A)	(A)	(A)	(A)	(A)	(A)	(A)	(A)
	OHL output shaft **(B)**	2500	**2500**	2500	2500	**2500**	2500	2500	**2500**	2500	2500	**2500**	2500
	Output RPM	9.28	**4.71**	3.15	9.28	**4.71**	3.15	9.28	**4.71**	3.15	9.28	**4.71**	3.15
	Input Hp (max) **(C)**	1.30	**0.66**	0.44	1.30	**0.66**	0.44	1.30	**0.66**	0.44	1.30	**0.66**	0.44
371.83	Output torque, in–lb	8851	**8851**	8851	8851	**8851**	8851	8851	**8851**	8851	8851	**8851**	8851
	OHL input shaft	(A)	(A)	(A)	(A)	(A)	(A)	(A)	(A)	(A)	(A)	(A)	(A)
	OHL output shaft **(B)**	2500	**2500**	2500	2500	**2500**	2500	2500	**2500**	2500	2500	**2500**	2500
	Output RPM	8.33	**4.23**	2.83	8.33	**4.23**	2.83	8.33	**4.23**	2.83	8.33	**4.23**	2.83
	Input Hp (max) **(C)**	1.17	**0.59**	0.40	1.17	**0.59**	0.40	1.17	**0.59**	0.40	1.17	**0.59**	0.40
414.11	Output torque, in–lb	8851	**8851**	8851	8851	**8851**	8851	8851	**8851**	8851	8851	**8851**	8851
	OHL input shaft	(A)	(A)	(A)	(A)	(A)	(A)	(A)	(A)	(A)	(A)	(A)	(A)
	OHL output shaft **(B)**	2500	**2500**	2500	2500	**2500**	2500	2500	**2500**	2500	2500	**2500**	2500
	Output RPM	7.99	**4.05**	2.71	7.99	**4.05**	2.71	7.99	**4.05**	2.71	7.99	**4.05**	2.71
	Input Hp (max) **(C)**	1.12	**0.57**	0.38	1.12	**0.57**	0.38	1.12	**0.57**	0.38	1.12	**0.57**	0.38
431.64	Output torque, in–lb	8851	**8851**	8851	8851	**8851**	8851	8851	**8851**	8851	8851	**8851**	8851
	OHL input shaft	(A)	(A)	(A)	(A)	(A)	(A)	(A)	(A)	(A)	(A)	(A)	(A)
	OHL output shaft **(B)**	2500	**2500**	2500	2500	**2500**	2500	2500	**2500**	2500	2500	**2500**	2500
	Output RPM	7.66	**3.89**	2.60	7.66	**3.89**	2.60	7.66	**3.89**	2.60	7.66	**3.89**	2.60
	Input Hp (max) **(C)**	1.08	**0.55**	0.36	1.08	**0.55**	0.36	1.08	**0.55**	0.36	1.08	**0.55**	0.36
450.22	Output torque, in–lb	8851	**8851**	8851	8851	**8851**	8851	8851	**8851**	8851	8851	**8851**	8851
	OHL input shaft	(A)	(A)	(A)	(A)	(A)	(A)	(A)	(A)	(A)	(A)	(A)	(A)
	OHL output shaft **(B)**	2500	**2500**	2500	2500	**2500**	2500	2500	**2500**	2500	2500	**2500**	2500
	Output RPM	7.24	**3.67**	2.46	7.24	**3.67**	2.46	7.24	**3.67**	2.46	7.24	**3.67**	2.46
	Input Hp (max) **(C)**	1.02	**0.52**	0.35	1.02	**0.52**	0.35	1.02	**0.52**	0.35	1.02	**0.52**	0.35
476.24	Output torque, in–lb	8851	**8851**	8851	8851	**8851**	8851	8851	**8851**	8851	8851	**8851**	8851
	OHL input shaft	(A)	(A)	(A)	(A)	(A)	(A)	(A)	(A)	(A)	(A)	(A)	(A)
	OHL output shaft **(B)**	2500	**2500**	2500	2500	**2500**	2500	2500	**2500**	2500	2500	**2500**	2500

Service factor: 1.0

(A) (B) (C) - See footnotes page on inside back cover

Blank areas (-) indicate configuration not available

MSM 68

Size: MW684

Four-stage reduction – Clamp collar, three-piece coupled, separate

NEMA motor frame		56C			—			140TC			180TC		
IEC motor frame		71D			80D			90D			100D		
Separate group		71			80			90			100		
Ratio	Output Rating data	3450	1750	1160	3450	1750	1160	3450	1750	1160	3450	1750	1160
	Output RPM	6.68	**3.39**	2.26	6.68	**3.39**	2.26	6.68	**3.39**	2.26	6.68	**3.39**	2.26
	Input Hp (max) **(C)**	0.94	**0.48**	0.32	0.94	**0.48**	0.32	0.94	**0.48**	0.32	0.94	**0.48**	0.32
516.84	Output torque, in–lb	8851	**8851**	8851	8851	**8851**	8851	8851	**8851**	8851	8851	**8851**	8851
	OHL input shaft	(A)	(A)	(A)	(A)	(A)	(A)	(A)	(A)	(A)	(A)	(A)	(A)
	OHL output shaft **(B)**	2500	**2500**	2500	2500	**2500**	2500	2500	**2500**	2500	2500	**2500**	2500
	Output RPM	6.29	**3.19**	2.13	6.29	**3.19**	2.13	6.29	**3.19**	2.13	6.29	**3.19**	2.13
	Input Hp (max) **(C)**	0.88	**0.45**	0.30	0.88	**0.45**	0.30	0.88	**0.45**	0.30	0.88	**0.45**	0.30
548.70	Output torque, in–lb	8851	**8851**	8851	8851	**8851**	8851	8851	**8851**	8851	8851	**8851**	8851
	OHL input shaft	(A)	(A)	(A)	(A)	(A)	(A)	(A)	(A)	(A)	(A)	(A)	(A)
	OHL output shaft **(B)**	2500	**2500**	2500	2500	**2500**	2500	2500	**2500**	2500	2500	**2500**	2500
	Output RPM	6.05	**3.07**	2.05	6.05	**3.07**	2.05	6.05	**3.07**	2.05	6.05	**3.07**	2.05
	Input Hp (max) **(C)**	0.85	**0.43**	0.29	0.85	**0.43**	0.29	0.85	**0.43**	0.29	0.85	**0.43**	0.29
570.25	Output torque, in–lb	8851	**8851**	8851	8851	**8851**	8851	8851	**8851**	8851	8851	**8851**	8851
	OHL input shaft	(A)	(A)	(A)	(A)	(A)	(A)	(A)	(A)	(A)	(A)	(A)	(A)
	OHL output shaft **(B)**	2500	**2500**	2500	2500	**2500**	2500	2500	**2500**	2500	2500	**2500**	2500
	Output RPM	5.33	**2.71**	1.81	5.33	**2.71**	1.81	5.33	**2.71**	1.81	5.33	**2.71**	1.81
	Input Hp (max) **(C)**	0.75	**0.38**	0.25	0.75	**0.38**	0.25	0.75	**0.38**	0.25	0.75	**0.38**	0.25
646.86	Output torque, in–lb	8851	**8851**	8851	8851	**8851**	8851	8851	**8851**	8851	8851	**8851**	8851
	OHL input shaft	(A)	(A)	(A)	(A)	(A)	(A)	(A)	(A)	(A)	(A)	(A)	(A)
	OHL output shaft **(B)**	2500	**2500**	2500	2500	**2500**	2500	2500	**2500**	2500	2500	**2500**	2500
	Output RPM	5.19	**2.63**	1.76	5.19	**2.63**	1.76	5.19	**2.63**	1.76	5.19	**2.63**	1.76
	Input Hp (max) **(C)**	0.73	**0.37**	0.25	0.73	**0.37**	0.25	0.73	**0.37**	0.25	0.73	**0.37**	0.25
665.28	Output torque, in–lb	8851	**8851**	8851	8851	**8851**	8851	8851	**8851**	8851	8851	**8851**	8851
	OHL input shaft	(A)	(A)	(A)	(A)	(A)	(A)	(A)	(A)	(A)	(A)	(A)	(A)
	OHL output shaft **(B)**	2500	**2500**	2500	2500	**2500**	2500	2500	**2500**	2500	2500	**2500**	2500
	Output RPM	5.33	**2.71**	1.81	5.33	**2.71**	1.81	5.33	**2.71**	1.81	5.33	**2.71**	1.81
	Input Hp (max) **(C)**	0.75	**0.38**	0.25	0.75	**0.38**	0.25	0.75	**0.38**	0.25	0.75	**0.38**	0.25
646.86	Output torque, in–lb	8851	**8851**	8851	8851	**8851**	8851	8851	**8851**	8851	8851	**8851**	8851
	OHL input shaft	(A)	(A)	(A)	(A)	(A)	(A)	(A)	(A)	(A)	(A)	(A)	(A)
	OHL output shaft **(B)**	2500	**2500**	2500	2500	**2500**	2500	2500	**2500**	2500	2500	**2500**	2500
	Output RPM	4.63	**2.35**	1.57	4.63	**2.35**	1.57	4.63	**2.35**	1.57	4.63	**2.35**	1.57
	Input Hp (max) **(C)**	0.65	**0.33**	0.22	0.65	**0.33**	0.22	0.65	**0.33**	0.22	0.65	**0.33**	0.22
745.30	Output torque, in–lb	8851	**8851**	8851	8851	**8851**	8851	8851	**8851**	8851	8851	**8851**	8851
	OHL input shaft	(A)	(A)	(A)	(A)	(A)	(A)	(A)	(A)	(A)	(A)	(A)	(A)
	OHL output shaft **(B)**	2500	**2500**	2500	2500	**2500**	2500	2500	**2500**	2500	2500	**2500**	2500
	Output RPM	4.20	**2.13**	1.42	4.20	**2.13**	1.42	4.20	**2.13**	1.42	4.20	**2.13**	1.42
	Input Hp (max) **(C)**	0.59	**0.30**	0.20	0.59	**0.30**	0.20	0.59	**0.30**	0.20	0.59	**0.30**	0.20
821.13	Output torque, in–lb	8851	**8851**	8851	8851	**8851**	8851	8851	**8851**	8851	8851	**8851**	8851
	OHL input shaft	(A)	(A)	(A)	(A)	(A)	(A)	(A)	(A)	(A)	(A)	(A)	(A)
	OHL output shaft **(B)**	2500	**2500**	2500	2500	**2500**	2500	2500	**2500**	2500	2500	**2500**	2500
	Output RPM	4.05	**2.05**	1.37	4.05	**2.05**	1.37	4.05	**2.05**	1.37	–	**–**	–
	Input Hp (max) **(C)**	0.57	**0.29**	0.19	0.57	**0.29**	0.19	0.57	**0.29**	0.19	–	**–**	–
851.77	Output torque, in–lb	8851	**8851**	8851	8851	**8851**	8851	8851	**8851**	8851	–	**–**	–
	OHL input shaft	(A)	**(A)**	**(A)**	**(A)**	**(A)**	**(A)**	**(A)**	**(A)**	**(A)**	–	**–**	–
	OHL output shaft **(B)**	2500	**2500**	2500	2500	**2500**	2500	2500	**2500**	2500	–	**–**	–
	Output RPM	3.87	**1.96**	1.31	3.87	**1.96**	1.31	3.87	**1.96**	1.31	3.87	**1.96**	1.31
	Input Hp (max) **(C)**	0.54	**0.28**	0.18	0.54	**0.28**	0.18	0.54	**0.28**	0.18	0.54	**0.28**	0.18
892.41	Output torque, in–lb	8851	**8851**	8851	8851	**8851**	8851	8851	**8851**	8851	8851	**8851**	8851
	OHL input shaft	(A)	(A)	(A)	(A)	(A)	(A)	(A)	(A)	(A)	(A)	(A)	(A)
	OHL output shaft **(B)**	2500	**2500**	2500	2500	**2500**	2500	2500	**2500**	2500	2500	**2500**	2500
	Output RPM	3.75	**1.90**	1.27	3.75	**1.90**	1.27	3.75	**1.90**	1.27	3.75	**1.90**	1.27
	Input Hp (max) **(C)**	0.53	**0.27**	0.18	0.53	**0.27**	0.18	0.53	**0.27**	0.18	0.53	**0.27**	0.18
920.53	Output torque, in–lb	8851	**8851**	8851	8851	**8851**	8851	8851	**8851**	8851	8851	**8851**	8851
	OHL input shaft	(A)	(A)	(A)	(A)	(A)	(A)	(A)	(A)	(A)	(A)	(A)	(A)
	OHL output shaft **(B)**	2500	**2500**	2500	2500	**2500**	2500	2500	**2500**	2500	2500	**2500**	2500

Service factor: 1.0

(A) (B) (C) - See footnotes page on inside back cover

Blank areas (-) indicate configuration not available

MSM 68

Size: MW684

Four-stage reduction – Clamp collar, three-piece coupled, separate

NEMA motor frame		56C			—			140TC			180TC		
IEC motor frame		71D			80D			90D			100D		
Separate group		71			80			90			100		
Ratio	Output Rating data	3450	1750	1160	3450	1750	1160	3450	1750	1160	3450	1750	1160
	Output RPM	3.56	**1.81**	1.21	3.56	**1.81**	1.21	3.56	**1.81**	1.21	–	–	–
	Input Hp (max) **(C)**	0.50	**0.25**	0.17	0.50	**0.25**	0.17	0.50	**0.25**	0.17	–	–	–
968.31	Output torque, in–lb	8851	**8851**	8851	8851	**8851**	8851	8851	**8851**	8851	–	–	–
	OHL input shaft	**(A)**	**(A)**	**(A)**	**(A)**	**(A)**	**(A)**	**(A)**	**(A)**	**(A)**	–	–	–
	OHL output shaft **(B)**	2500	**2500**	2500	2500	**2500**	2500	2500	**2500**	2500	–	–	–
	Output RPM	3.29	**1.67**	1.12	3.29	**1.67**	1.12	3.29	**1.67**	1.12	–	–	–
	Input Hp (max) **(C)**	0.46	**0.23**	0.16	0.46	**0.23**	0.16	0.46	**0.23**	0.16	–	–	–
1049.01	Output torque, in–lb	8851	**8851**	8851	8851	**8851**	8851	8851	**8851**	8851	–	–	–
	OHL input shaft	(A)	(A)	(A)	(A)	(A)	(A)	(A)	(A)	(A)	–	–	–
	OHL output shaft **(B)**	2500	**2500**	2500	2500	**2500**	2500	2500	**2500**	2500	–	–	–
	Output RPM	3.07	**1.56**	1.04	3.07	**1.56**	1.04	3.07	**1.56**	1.04	–	–	–
	Input Hp (max) **(C)**	0.43	**0.22**	0.15	0.43	**0.22**	0.15	0.43	**0.22**	0.15	–	–	–
1122.26	Output torque, in–lb	8851	**8851**	8851	8851	**8851**	8851	8851	**8851**	8851	–	–	–
	OHL input shaft	(A)	(A)	(A)	**(A)**	**(A)**	**(A)**	**(A)**	**(A)**	**(A)**	–	–	–
	OHL output shaft **(B)**	2500	**2500**	2500	2500	**2500**	2500	2500	**2500**	2500	–	–	–
	Output RPM	2.89	**1.47**	0.98	2.89	**1.47**	0.98	–	–	–	–	–	–
	Input Hp (max) **(C)**	0.41	**0.21**	0.14	0.41	**0.21**	0.14	–	–	–	–	–	–
1194.20	Output torque, in–lb	8851	**8851**	8851	8851	**8851**	8851	–	–	–	–	–	–
	OHL input shaft	**(A)**	**(A)**	**(A)**	**(A)**	**(A)**	**(A)**	–	–	–	–	–	–
	OHL output shaft **(B)**	2500	**2500**	2500	2500	**2500**	2500	–	–	–	–	–	–
	Output RPM	2.67	**1.35**	0.90	2.67	**1.35**	0.90	–	–	–	–	–	–
	Input Hp (max) **(C)**	0.37	**0.19**	0.13	0.37	**0.19**	0.13	–	–	–	–	–	–
1293.72	Output torque, in–lb	8851	**8851**	8851	8851	**8851**	8851	–	–	–	–	–	–
	OHL input shaft	**(A)**	**(A)**	**(A)**	**(A)**	**(A)**	**(A)**	–	–	–	–	–	–
	OHL output shaft **(B)**	2500	**2500**	2500	2500	**2500**	2500	–	–	–	–	–	–
	Output RPM	2.55	**1.29**	0.86	2.55	**1.29**	0.86	2.55	**1.29**	0.86	–	–	–
	Input Hp (max) **(C)**	0.36	**0.18**	0.12	0.36	**0.18**	0.12	0.36	**0.18**	0.12	–	–	–
1352.66	Output torque, in–lb	8851	**8851**	8851	8851	**8851**	8851	8851	**8851**	8851	–	–	–
	OHL input shaft	(A)	(A)	(A)	(A)	(A)	**(A)**	**(A)**	**(A)**	**(A)**	–	–	–
	OHL output shaft **(B)**	2500	**2500**	2500	2500	**2500**	2500	2500	**2500**	2500	–	–	–
	Output RPM	2.41	**1.22**	0.82	2.41	**1.22**	0.82	–	–	–	–	–	–
	Input Hp (max) **(C)**	0.34	**0.17**	0.11	0.34	**0.17**	0.11	–	–	–	–	–	–
1429.92	Output torque, in–lb	8851	**8851**	8851	8851	**8851**	8851	–	–	–	–	–	–
	OHL input shaft	**(A)**	**(A)**	**(A)**	**(A)**	**(A)**	**(A)**	–	–	–	–	–	–
	OHL output shaft **(B)**	2500	**2500**	2500	2500	**2500**	2500	–	–	–	–	–	–

Service factor: 1.0

(A) (B) (C) - See footnotes page on inside back cover

Blank areas (-) indicate configuration not available

MSM 68

Size: MW685

Five-stage reduction – Clamp collar, three-piece coupled, separate

NEMA motor frame		56C			—			140TC			180TC		
IEC motor frame		71D			80D			90D			100D		
Separate group		71			80			90			100		
Ratio	Output Rating data	3450	1750	1160	3450	1750	1160	3450	1750	1160	3450	1750	1160
	Output RPM	2.09	**1.06**	0.71	2.09	**1.06**	0.71	2.09	**1.06**	0.71	2.09	**1.06**	0.71
	Input Hp (max) **(C)**	0.29	**0.15**	0.10	0.29	**0.15**	0.10	0.29	**0.15**	0.10	0.29	**0.15**	0.10
1647.55	Output torque, in–lb	8851	**8851**	8851	8851	**8851**	8851	8851	**8851**	8851	8851	**8851**	8851
	OHL input shaft	(A)	(A)	(A)	(A)	(A)	(A)	(A)	(A)	(A)	(A)	(A)	(A)
	OHL output shaft **(B)**	2500	**2500**	2500	2500	**2500**	2500	2500	**2500**	2500	2500	**2500**	2500
	Output RPM	1.86	**0.94**	0.63	1.86	**0.94**	0.63	1.86	**0.94**	0.63	1.86	**0.94**	0.63
	Input Hp (max) **(C)**	0.26	**0.13**	0.09	0.26	**0.13**	0.09	0.26	**0.13**	0.09	0.26	**0.13**	0.09
1858.93	Output torque, in–lb	8851	**8851**	8851	8851	**8851**	8851	8851	**8851**	8851	8851	**8851**	8851
	OHL input shaft	(A)	(A)	(A)	(A)	(A)	(A)	(A)	(A)	(A)	(A)	(A)	(A)
	OHL output shaft **(B)**	2500	**2500**	2500	2500	**2500**	2500	2500	**2500**	2500	2500	**2500**	2500
	Output RPM	1.62	**0.82**	0.55	1.62	**0.82**	0.55	1.62	**0.82**	0.55	1.62	**0.82**	0.55
	Input Hp (max) **(C)**	0.23	**0.12**	0.08	0.23	**0.12**	0.08	0.23	**0.12**	0.08	0.23	**0.12**	0.08
2124.46	Output torque, in–lb	8851	**8851**	8851	8851	**8851**	8851	8851	**8851**	8851	8851	**8851**	8851
	OHL input shaft	(A)	(A)	(A)	(A)	(A)	(A)	(A)	(A)	(A)	(A)	(A)	(A)
	OHL output shaft **(B)**	2500	**2500**	2500	2500	**2500**	2500	2500	**2500**	2500	2500	**2500**	2500
	Output RPM	1.45	**0.74**	0.49	1.45	**0.74**	0.49	1.45	**0.74**	0.49	1.45	**0.74**	0.49
	Input Hp (max) **(C)**	0.20	**0.10**	0.07	0.20	**0.10**	0.07	0.20	**0.10**	0.07	0.20	**0.10**	0.07
2375.70	Output torque, in–lb	8851	**8851**	8851	8851	**8851**	8851	8851	**8851**	8851	8851	**8851**	8851
	OHL input shaft	(A)	(A)	(A)	(A)	(A)	(A)	(A)	(A)	(A)	(A)	(A)	(A)
	OHL output shaft **(B)**	2500	**2500**	2500	2500	**2500**	2500	2500	**2500**	2500	2500	**2500**	2500
	Output RPM	1.42	**0.72**	0.48	1.42	**0.72**	0.48	1.42	**0.72**	0.48	1.42	**0.72**	0.48
	Input Hp (max) **(C)**	0.20	**0.10**	0.07	0.20	**0.10**	0.07	0.20	**0.10**	0.07	0.20	**0.10**	0.07
2437.81	Output torque, in–lb	8851	**8851**	8851	8851	**8851**	8851	8851	**8851**	8851	8851	**8851**	8851
	OHL input shaft	(A)	(A)	(A)	(A)	(A)	(A)	(A)	(A)	(A)	(A)	(A)	(A)
	OHL output shaft **(B)**	2500	**2500**	2500	2500	**2500**	2500	2500	**2500**	2500	2500	**2500**	2500
	Output RPM	1.27	**0.65**	0.43	1.27	**0.65**	0.43	1.27	**0.65**	0.43	1.27	**0.65**	0.43
	Input Hp (max) **(C)**	0.18	**0.09**	0.06	0.18	**0.09**	0.06	0.18	**0.09**	0.06	0.18	**0.09**	0.06
2711.13	Output torque, in–lb	8851	**8851**	8851	8851	**8851**	8851	8851	**8851**	8851	8851	**8851**	8851
	OHL input shaft	(A)	(A)	(A)	(A)	(A)	(A)	(A)	(A)	(A)	(A)	(A)	(A)
	OHL output shaft **(B)**	2500	**2500**	2500	2500	**2500**	2500	2500	**2500**	2500	2500	**2500**	2500
	Output RPM	1.22	**0.62**	0.41	1.22	**0.62**	0.41	1.22	**0.62**	0.41	1.22	**0.62**	0.41
	Input Hp (max) **(C)**	0.17	**0.09**	0.06	0.17	**0.09**	0.06	0.17	**0.09**	0.06	0.17	**0.09**	0.06
2825.80	Output torque, in–lb	8851	**8851**	8851	8851	**8851**	8851	8851	**8851**	8851	8851	**8851**	8851
	OHL input shaft	(A)	(A)	(A)	(A)	(A)	(A)	(A)	(A)	(A)	(A)	(A)	(A)
	OHL output shaft **(B)**	2500	**2500**	2500	2500	**2500**	2500	2500	**2500**	2500	2500	**2500**	2500
	Output RPM	1.19	**0.61**	0.40	1.19	**0.61**	0.40	1.19	**0.61**	0.40	1.19	**0.61**	0.40
	Input Hp (max) **(C)**	0.17	**0.09**	0.06	0.17	**0.09**	0.06	0.17	**0.09**	0.06	0.17	**0.09**	0.06
2890.72	Output torque, in–lb	8851	**8851**	8851	8851	**8851**	8851	8851	**8851**	8851	8851	**8851**	8851
	OHL input shaft	(A)	(A)	(A)	(A)	(A)	(A)	(A)	(A)	(A)	(A)	(A)	(A)
	OHL output shaft **(B)**	2500	**2500**	2500	2500	**2500**	2500	2500	**2500**	2500	2500	**2500**	2500
	Output RPM	1.10	**0.56**	0.37	1.10	**0.56**	0.37	1.10	**0.56**	0.37	1.10	**0.56**	0.37
	Input Hp (max) **(C)**	0.15	**0.08**	0.05	0.15	**0.08**	0.05	0.15	**0.08**	0.05	0.15	**0.08**	0.05
3143.48	Output torque, in–lb	8851	**8851**	8851	8851	**8851**	8851	8851	**8851**	8851	8851	**8851**	8851
	OHL input shaft	(A)	(A)	(A)	(A)	(A)	(A)	(A)	(A)	(A)	(A)	(A)	(A)
	OHL output shaft **(B)**	2500	**2500**	2500	2500	**2500**	2500	2500	**2500**	2500	2500	**2500**	2500
	Output RPM	1.02	**0.52**	0.35	1.02	**0.52**	0.35	1.02	**0.52**	0.35	1.02	**0.52**	0.35
	Input Hp (max) **(C)**	0.14	**0.07**	0.05	0.14	**0.07**	0.05	0.14	**0.07**	0.05	0.14	**0.07**	0.05
3377.70	Output torque, in–lb	8851	**8851**	8851	8851	**8851**	8851	8851	**8851**	8851	8851	**8851**	8851
	OHL input shaft	(A)	(A)	(A)	(A)	(A)	(A)	(A)	(A)	(A)	(A)	(A)	(A)
	OHL output shaft **(B)**	2500	**2500**	2500	2500	**2500**	2500	2500	**2500**	2500	2500	**2500**	2500
	Output RPM	0.98	**0.50**	0.33	0.98	**0.50**	0.33	0.98	**0.50**	0.33	–	**–**	–
	Input Hp (max) **(C)**	0.14	**0.07**	0.05	0.14	**0.07**	0.05	0.14	**0.07**	0.05	–	**–**	–
3525.06	Output torque, in–lb	8851	**8851**	8851	8851	**8851**	8851	8851	**8851**	8851	–	**–**	–
	OHL input shaft	**(A)**	**(A)**	**(A)**	**(A)**	**(A)**	**(A)**	**(A)**	**(A)**	**(A)**	–	**–**	–
	OHL output shaft **(B)**	2500	**2500**	2500	2500	**2500**	2500	2500	**2500**	2500	–	**–**	–

Service factor: 1.0

(A) (B) (C) - See footnotes page on inside back cover

Blank areas (-) indicate configuration not available

MSM 68

Size: MW685

Five-stage reduction – Clamp collar, three-piece coupled, separate

NEMA motor frame		56C			—			140TC			180TC		
IEC motor frame		71D			80D			90D			100D		
Separate group		71			80			90			100		
Ratio	Output Rating data	3450	1750	1160	3450	1750	1160	3450	1750	1160	3450	1750	1160
	Output RPM	0.86	**0.43**	0.29	0.86	**0.43**	0.29	0.86	**0.43**	0.29	–	–	–
	Input Hp (max) **(C)**	0.12	**0.06**	0.04	0.12	**0.06**	0.04	0.12	**0.06**	0.04	–	–	–
4024.32	Output torque, in–lb	8851	**8851**	8851	8851	**8851**	8851	8851	**8851**	8851	–	–	–
	OHL input shaft	(A)	(A)	(A)	(A)	(A)	**(A)**	**(A)**	**(A)**	**(A)**	–	–	–
	OHL output shaft **(B)**	2500	**2500**	2500	2500	**2500**	2500	2500	**2500**	2500	–	–	–
	Output RPM	0.75	**0.38**	0.26	0.75	**0.38**	0.26	0.75	**0.38**	0.26	–	–	–
	Input Hp (max) **(C)**	0.11	**0.05**	0.04	0.11	**0.05**	0.04	0.11	**0.05**	0.04	–	–	–
4575.38	Output torque, in–lb	8851	**8851**	8851	8851	**8851**	8851	8851	**8851**	8851	–	–	–
	OHL input shaft	**(A)**	**(A)**	**(A)**	**(A)**	**(A)**	**(A)**	**(A)**	**(A)**	**(A)**	–	–	–
	OHL output shaft **(B)**	2500	**2500**	2500	2500	**2500**	2500	2500	**2500**	2500	–	–	–
	Output RPM	0.65	**0.33**	0.22	0.65	**0.33**	0.22	0.65	**0.33**	0.22	–	–	–
	Input Hp (max) **(C)**	0.09	**0.05**	0.03	0.09	**0.05**	0.03	0.09	**0.05**	0.03	–	–	–
5305.81	Output torque, in–lb	8851	**8851**	8851	8851	**8851**	8851	8851	**8851**	8851	–	–	–
	OHL input shaft	**(A)**	**(A)**	**(A)**	**(A)**	**(A)**	**(A)**	**(A)**	**(A)**	**(A)**	–	–	–
	OHL output shaft **(B)**	2500	**2500**	2500	2500	**2500**	2500	2500	**2500**	2500	–	–	–
	Output RPM	0.56	**0.29**	0.19	0.56	**0.29**	0.19	–	–	–	–	–	–
	Input Hp (max) **(C)**	0.08	**0.04**	0.03	0.08	**0.04**	0.03	–	–	–	–	–	–
6116.34	Output torque, in–lb	8851	**8851**	8851	8851	**8851**	8851	–	–	–	–	–	–
	OHL input shaft	**(A)**	**(A)**	**(A)**	**(A)**	**(A)**	**(A)**	–	–	–	–	–	–
	OHL output shaft **(B)**	2500	**2500**	2500	2500	**2500**	2500	–	–	–	–	–	–
	Output RPM	0.48	**0.25**	0.16	0.48	**0.25**	0.16	0.48	**0.25**	0.16	–	–	–
	Input Hp (max) **(C)**	0.07	**0.03**	0.02	0.07	**0.03**	0.02	0.07	**0.03**	0.02	–	–	–
7114.93	Output torque, in–lb	8851	**8851**	8851	8851	**8851**	8851	8851	**8851**	8851	–	–	–
	OHL input shaft	(A)	**(A)**	**(A)**	**(A)**	**(A)**	**(A)**	**(A)**	**(A)**	**(A)**	–	–	–
	OHL output shaft **(B)**	2500	**2500**	2500	2500	**2500**	2500	2500	**2500**	2500	–	–	–

Service factor: 1.0

(A) (B) (C) - See footnotes page on inside back cover

Blank areas (-) indicate configuration not available

MSM 88

Size: MW882

Double reduction – Clamp collar, three-piece coupled, separate

NEMA motor frame		140TC			180TC			—			210TC			250TC			280TC		
IEC motor frame		90D			100D			112D			132D			160D			—		
Separate group		90			100			112			132			160			—		
Ratio	Output Rating data	3450	1750	1160	3450	1750	1160	3450	1750	1160	3450	1750	1160	3450	1750	1160	3450	1750	1160
	Output RPM	–	–	–	–	–	–	390	198	131	390	198	131	390	198	131	390	197	131
	Input Hp (max) (C)	–	–	–	–	–	–	27.34	13.87	9.19	64.54	30.18	16.82	79.73	45.47	27.89	79.73	45.47	27.89
8.85	Output torque, in–lb	–	–	–	–	–	–	4418	4418	4418	10430	9614	8083	12884	14484	13405	12884	14484	13405
	OHL input shaft	–	–	–	–	–	–	(A)	838	873	(A)	946	993	(A)	1403	1585	(A)	1403	1585
	OHL output shaft (B)	–	–	–	–	–	–	(A)	3611	3611	(A)	3611	3611	(A)	3611	3611	(A)	3611	3611
	Output RPM	–	–	–	320	162	108	320	162	108	320	162	108	320	162	108	320	162	108
	Input Hp (max) (C)	–	–	–	20.42	10.36	6.87	27.34	13.87	9.19	64.54	28.62	15.95	71.77	43.28	26.11	71.77	43.28	26.11
10.79	Output torque, in–lb	–	–	–	4024	4024	4024	5389	5389	5389	12721	11120	9348	14147	16817	15307	14147	16817	15307
	OHL input shaft	–	–	–	(A)	713	742	(A)	843	868	(A)	952	994	(A)	1418	1582	(A)	1418	1582
	OHL output shaft (B)	–	–	–	(A)	3611	3611	(A)	3611	3611	(A)	3611	3611	(A)	3611	3611	(A)	3611	3611
	Output RPM	–	–	–	273	138	92	273	138	92	273	138	92	273	138	92	273	138	92
	Input Hp (max) (C)	–	–	–	20.42	10.36	6.87	27.34	13.87	9.19	64.54	27.16	15.14	65.75	36.94	24.48	65.75	36.94	24.48
12.64	Output torque, in–lb	–	–	–	4716	4716	4716	6314	6314	6314	14906	12366	10398	15184	16817	16817	15184	16817	16817
	OHL input shaft	–	–	–	(A)	713	742	(A)	843	877	(A)	952	994	(A)	1420	1580	(A)	1420	1580
	OHL output shaft (B)	–	–	–	(A)	3611	3611	(A)	3611	3611	(A)	3611	3611	(A)	3611	3611	(A)	3611	3611
	Output RPM	232	118	78	232	118	78	232	118	78	232	118	78	232	118	78	232	118	78
	Input Hp (max) (C)	9.86	5.00	3.32	20.42	10.36	6.87	27.34	13.87	9.19	59.94	25.55	14.24	59.94	31.42	20.83	59.94	31.42	20.83
14.86	Output torque, in–lb	2678	2678	2678	5543	5543	5543	7422	7422	7422	16273	13672	11498	16273	16817	16817	16273	16817	16817
	OHL input shaft	(A)	452	471	(A)	709	738	(A)	841	876	(A)	950	994	(A)	1419	1587	(A)	1419	1587
	OHL output shaft (B)	3611	3611	3611	3611	3611	3611	3611	3611	3611	3611	3611	3611	3611	3611	3611	3611	3611	3611
	Output RPM	202	103	68	202	103	68	202	103	68	202	103	68	202	103	68	202	103	68
	Input Hp (max) (C)	9.86	5.00	3.32	20.42	10.36	6.87	27.34	13.87	9.07	53.99	24.08	13.42	53.99	27.39	18.15	53.99	27.39	18.15
17.05	Output torque, in–lb	3072	3072	3072	6360	6360	6360	8516	8516	8399	16817	14787	12434	16817	16817	16817	16817	16817	16817
	OHL input shaft	(A)	454	472	(A)	710	738	(A)	838	875	(A)	948	993	(A)	1416	1584	(A)	1416	1584
	OHL output shaft (B)	3611	3611	3611	3611	3611	3611	3611	3611	3611	3611	3611	3611	3611	3611	3611	3611	3611	3611
	Output RPM	171	87	58	171	87	58	171	87	58	171	87	58	171	87	58	–	–	–
	Input Hp (max) (C)	9.86	5.00	3.32	20.42	10.36	6.84	27.34	13.87	8.48	45.74	22.29	12.42	45.74	23.20	15.38	–	–	–
20.12	Output torque, in–lb	3626	3626	3626	7506	7506	7477	10051	10051	9268	16817	16154	13583	16817	16817	16817	–	–	–
	OHL input shaft	(A)	456	470	(A)	707	737	(A)	839	874	(A)	946	993	(A)	1426	1591	–	–	–
	OHL output shaft (B)	3611	3611	3611	3611	3611	3611	3611	3611	3611	3611	3611	3611	3611	3611	3611	–	–	–
	Output RPM	158	80	53	158	80	53	158	80	53	158	80	53	158	80	53	–	–	–
	Input Hp (max) (C)	9.86	5.00	3.32	20.42	10.36	6.61	27.34	13.87	8.18	42.20	21.41	11.96	42.20	21.41	14.19	–	–	–
21.81	Output torque, in–lb	3930	3930	3930	8136	8136	7837	10894	10894	9693	16817	16817	14176	16817	16817	16817	–	–	–
	OHL input shaft	(A)	456	474	(A)	638	738	(A)	757	873	(A)	956	993	(A)	1437	1592	–	–	–
	OHL output shaft (B)	3611	3611	3611	3611	3611	3611	3611	3611	3611	3611	3611	3611	3611	3611	3611	–	–	–
	Output RPM	142	72	48	142	72	48	142	72	48	142	72	48	142	72	48	–	–	–
	Input Hp (max) (C)	9.86	5.00	3.25	20.42	10.36	6.31	27.34	13.87	7.79	37.96	19.25	11.38	37.96	19.25	12.76	–	–	–
24.25	Output torque, in–lb	4370	4370	4278	9046	9046	8311	12113	12113	10262	16817	16817	14992	16817	16817	16817	–	–	–
	OHL input shaft	(A)	456	474	(A)	522	737	(A)	587	873	(A)	956	992	(A)	1447	1594	–	–	–
	OHL output shaft (B)	3611	3611	3611	3611	3611	3611	3611	3611	3611	3611	3611	3611	3611	3611	3611	–	–	–
	Output RPM	131	66	44	131	66	44	131	66	44	131	66	44	131	66	44	–	–	–
	Input Hp (max) (C)	9.86	5.00	3.13	20.14	10.36	6.06	25.70	13.39	7.48	34.94	17.73	10.95	34.94	17.73	11.75	–	–	–
26.34	Output torque, in–lb	4747	4747	4476	9693	9826	8680	12367	12701	10712	16817	16817	15676	16817	16817	16817	–	–	–
	OHL input shaft	(A)	455	475	(A)	408	709	(A)	519	873	(A)	949	992	(A)	1454	1595	–	–	–
	OHL output shaft (B)	3611	3611	3611	3611	3611	3611	3611	3611	3611	3611	3611	3611	3611	3611	3611	–	–	–
	Output RPM	118	60	40	118	60	40	118	60	40	118	60	40	118	60	40	–	–	–
	Input Hp (max) (C)	9.86	5.00	2.98	18.62	10.13	5.78	23.65	12.75	7.13	31.59	16.03	10.51	31.59	16.03	10.62	–	–	–
29.14	Output torque, in–lb	5250	5250	4717	9912	10629	9143	12587	13384	11288	16817	16817	16642	16817	16817	16817	–	–	–
	OHL input shaft	(A)	454	474	(A)	402	674	(A)	444	872	(A)	951	990	(A)	1462	1595	–	–	–
	OHL output shaft (B)	3611	3611	3611	3611	3611	3611	3611	3611	3611	3611	3611	3611	3611	3611	3611	–	–	–
	Output RPM	112	57	38	112	57	38	112	57	38	112	57	38	112	57	38	–	–	–
	Input Hp (max) (C)	9.86	5.00	3.32	20.42	10.36	6.87	24.19	13.62	9.03	24.19	13.62	9.03	24.19	13.62	9.03	–	–	–
30.67	Output torque, in–lb	5526	5526	5526	11441	11441	11441	13553	15047	15047	13553	15047	15047	13553	15047	15047	–	–	–
	OHL input shaft	(A)	456	474	(A)	638	736	(A)	774	871	(A)	958	997	(A)	1526	1589	–	–	–
	OHL output shaft (B)	3611	3611	3611	3611	3611	3611	3611	3611	3611	3611	3611	3611	3611	3611	3611	–	–	–
	Output RPM	101	51	34	101	51	34	101	51	34	101	51	34	101	51	34	–	–	–
	Input Hp (max) (C)	9.86	5.00	3.32	20.08	10.36	6.87	22.24	12.20	8.09	22.24	12.20	8.09	22.24	12.20	8.09	–	–	–
34.23	Output torque, in–lb	6168	6168	6168	12560	12770	12770	13908	15047	15047	13908	15047	15047	13908	15047	15047	–	–	–
	OHL input shaft	(A)	456	474	(A)	522	739	(A)	830	874	(A)	949	989	(A)	1528	1592	–	–	–
	OHL output shaft (B)	3611	3611	3611	3611	3611	3611	3611	3611	3611	3611	3611	3611	3611	3611	3611	–	–	–
	Output RPM	93	47	31	93	47	31	93	47	31	93	47	31	93	47	31	–	–	–
	Input Hp (max) (C)	9.86	5.00	3.32	18.95	10.36	6.87	20.99	11.27	7.47	20.99	11.27	7.47	20.99	11.27	7.47	–	–	–
37.08	Output torque, in–lb	6681	6681	6681	12840	13831	13831	14219	15047	15047	14219	15047	15047	14219	15047	15047	–	–	–
	OHL input shaft	(A)	455	474	(A)	408	709	(A)	840	871	(A)	951	991	(A)	1530	1593	–	–	–
	OHL output shaft (B)	3611	3611	3611	3611	3611	3611	3611	3611	3611	3611	3611	3611	3611	3611	3611	–	–	–

MSM 88

Size: MW882

Double reduction – Clamp collar, three-piece coupled, separate

NEMA motor frame		140TC			180TC			—			210TC			250TC			280TC		
IEC motor frame		90D			100D			112D			132D			160D			—		
Separate group		90			100			112			132			160			—		
Ratio	Output Rating data	3450	1750	1160	3450	1750	1160	3450	1750	1160	3450	1750	1160	3450	1750	1160	3450	1750	1160
	Output RPM	82	**42**	28	82	**42**	28	82	**42**	28	82	**42**	28	82	**42**	28	–	–	–
	Input Hp (max) **(C)**	9.86	**5.00**	3.32	17.27	**9.72**	6.46	19.17	**9.94**	6.59	19.17	**9.94**	6.59	19.17	**9.94**	6.59	–	–	–
42.03	Output torque, in–lb	7572	**7572**	7572	13257	**14706**	14754	14721	**15047**	15047	14721	**15047**	15047	14721	**15047**	15047	–	–	–
	OHL input shaft	**(A)**	**454**	472	**(A)**	**402**	674	**(A)**	**839**	874	**(A)**	**951**	991	**(A)**	**1531**	1594	–	–	–
	OHL output shaft **(B)**	3611	**3611**	3611	3611	**3611**	3611	3611	**3611**	3611	3611	**3611**	3611	3611	**3611**	3611	–	–	–
	Output RPM	76	**39**	26	76	**39**	26	76	**39**	26	76	**39**	26	76	**39**	26	–	–	–
	Input Hp (max) **(C)**	9.86	**5.00**	3.21	16.31	**9.18**	6.10	18.18	**9.23**	6.12	18.18	**9.23**	6.12	18.18	**9.23**	6.12	–	–	–
45.27	Output torque, in–lb	8158	**8158**	7908	13493	**14964**	15016	15032	**15047**	15047	15032	**15047**	15047	15032	**15047**	15047	–	–	–
	OHL input shaft	**(A)**	**452**	472	**(A)**	**396**	666	**(A)**	**840**	875	**(A)**	**953**	992	**(A)**	**1532**	1595	–	–	–
	OHL output shaft **(B)**	3611	**3611**	3611	3611	**3611**	3611	3611	**3611**	3611	3611	**3611**	3611	3611	**3611**	3611	–	–	–
	Output RPM	70	**36**	24	70	**36**	24	70	**36**	24	70	**36**	24	–	–	–	–	–	–
	Input Hp (max) **(C)**	9.86	**5.00**	3.11	15.35	**8.53**	5.66	16.83	**8.53**	5.66	16.83	**8.53**	5.65	–	–	–	–	–	–
48.95	Output torque, in–lb	8821	**8821**	8279	13732	**15047**	15047	15047	**15047**	15047	15047	**15047**	15047	–	–	–	–	–	–
	OHL input shaft	**(A)**	**453**	472	**(A)**	**391**	660	**(A)**	**841**	876	**(A)**	**954**	993	–	–	–	–	–	–
	OHL output shaft **(B)**	3611	**3611**	3611	3611	**3611**	3611	3611	**3611**	3611	3611	**3611**	3611	–	–	–	–	–	–
	Output RPM	65	**33**	22	65	**33**	22	65	**33**	22	65	**33**	22	–	–	–	–	–	–
	Input Hp (max) **(C)**	9.29	**5.00**	2.97	14.38	**7.86**	5.21	15.49	**7.86**	5.21	15.49	**7.86**	5.21	–	–	–	–	–	–
53.16	Output torque, in–lb	9025	**9578**	8572	13965	**15047**	15047	15047	**15047**	15047	15047	**15047**	15047	–	–	–	–	–	–
	OHL input shaft	**(A)**	**456**	472	**(A)**	**385**	653	**(A)**	**842**	877	**(A)**	**955**	994	–	–	–	–	–	–
	OHL output shaft **(B)**	3611	**3611**	3611	3611	**3611**	3611	3611	**3611**	3611	3611	**3611**	3611	–	–	–	–	–	–
	Output RPM	59	**30**	20	59	**30**	20	59	**30**	20	59	**30**	20	–	–	–	–	–	–
	Input Hp (max) **(C)**	8.57	**5.00**	2.86	13.26	**7.11**	4.71	14.01	**7.11**	4.71	14.01	**7.11**	4.71	–	–	–	–	–	–
58.78	Output torque, in–lb	9201	**10584**	9131	14241	**15047**	15047	15047	**15047**	15047	15047	**15047**	15047	–	–	–	–	–	–
	OHL input shaft	**(A)**	**454**	471	**(A)**	**379**	650	**(A)**	**843**	878	**(A)**	**956**	995	–	–	–	–	–	–
	OHL output shaft **(B)**	3611	**3611**	3611	3611	**3611**	3611	3611	**3611**	3611	3611	**3611**	3611	–	–	–	–	–	–
	Output RPM	54	**27**	18	54	**27**	18	54	**27**	18	54	**27**	18	–	–	–	–	–	–
	Input Hp (max) **(C)**	8.02	**4.70**	2.69	12.42	**6.56**	4.35	12.94	**6.56**	4.35	12.94	**6.56**	4.35	–	–	–	–	–	–
63.67	Output torque, in–lb	9330	**10769**	9290	14448	**15047**	15047	15047	**15047**	15047	15047	**15047**	15047	–	–	–	–	–	–
	OHL input shaft	**(A)**	**454**	471	**(A)**	**373**	643	**(A)**	**844**	878	**(A)**	**957**	996	–	–	–	–	–	–
	OHL output shaft **(B)**	3611	**3611**	3611	3611	**3611**	3611	3611	**3611**	3611	3611	**3611**	3611	–	–	–	–	–	–
	Output RPM	48	**24**	16	48	**24**	16	48	**24**	16	–	–	–	–	–	–	–	–	–
	Input Hp (max) **(C)**	7.26	**4.30**	2.58	11.24	**5.82**	3.86	11.48	**5.82**	3.86	–	–	–	–	–	–	–	–	–
71.75	Output torque, in–lb	9514	**11102**	10065	14729	**15047**	15047	15047	**15047**	15047	–	–	–	–	–	–	–	–	–
	OHL input shaft	**(A)**	**455**	472	**(A)**	**369**	641	**(A)**	**844**	879	–	–	–	–	–	–	–	–	–
	OHL output shaft **(B)**	3611	**3611**	3611	3611	**3611**	3611	3611	**3611**	3611	–	–	–	–	–	–	–	–	–
	Output RPM	44	**22**	15	44	**22**	15	44	**22**	15	–	–	–	–	–	–	–	–	–
	Input Hp (max) **(C)**	6.72	**3.98**	2.47	9.98	**5.32**	3.53	9.98	**5.32**	3.53	–	–	–	–	–	–	–	–	–
78.56	Output torque, in–lb	9646	**11256**	10557	14323	**15047**	15047	14323	**15047**	15047	–	–	–	–	–	–	–	–	–
	OHL input shaft	**(A)**	**455**	471	**(A)**	**364**	743	**(A)**	**844**	879	–	–	–	–	–	–	–	–	–
	OHL output shaft **(B)**	3611	**3611**	3611	3611	**3611**	3611	3611	**3611**	3611	–	–	–	–	–	–	–	–	–
	Output RPM	39	**20**	13	39	**20**	13	–	–	–	–	–	–	–	–	–	–	–	–
	Input Hp (max) **(C)**	6.12	**3.63**	2.29	6.98	**4.77**	2.60	–	–	–	–	–	–	–	–	–	–	–	–
87.50	Output torque, in–lb	9786	**11426**	10886	11150	**15047**	12343	–	–	–	–	–	–	–	–	–	–	–	–
	OHL input shaft	**(A)**	**456**	472	**(A)**	**621**	743	–	–	–	–	–	–	–	–	–	–	–	–
	OHL output shaft **(B)**	3611	**3611**	3611	3611	**3611**	3611	–	–	–	–	–	–	–	–	–	–	–	–
	Output RPM	34	**17**	12	–	–	–	–	–	–	–	–	–	–	–	–	–	–	–
	Input Hp (max) **(C)**	4.42	**3.22**	1.64	–	–	–	–	–	–	–	–	–	–	–	–	–	–	–
100.06	Output torque, in–lb	8074	**11619**	8935	–	–	–	–	–	–	–	–	–	–	–	–	–	–	–
	OHL input shaft	(A)	**456**	475	–	–	–	–	–	–	–	–	–	–	–	–	–	–	–
	OHL output shaft **(B)**	3611	**3611**	3611	–	–	–	–	–	–	–	–	–	–	–	–	–	–	–
	Output RPM	31	**16**	10	–	–	–	–	–	–	–	–	–	–	–	–	–	–	–
	Input Hp (max) **(C)**	3.03	**2.94**	1.13	–	–	–	–	–	–	–	–	–	–	–	–	–	–	–
110.96	Output torque, in–lb	6142	**11750**	6797	–	–	–	–	–	–	–	–	–	–	–	–	–	–	–
	OHL input shaft	**(A)**	**456**	475	–	–	–	–	–	–	–	–	–	–	–	–	–	–	–
	OHL output shaft **(B)**	3611	**3611**	3611	–	–	–	–	–	–	–	–	–	–	–	–	–	–	–
	Output RPM	28	**14**	9	–	–	–	–	–	–	–	–	–	–	–	–	–	–	–
	Input Hp (max) **(C)**	2.17	**2.68**	0.81	–	–	–	–	–	–	–	–	–	–	–	–	–	–	–
123.05	Output torque, in–lb	4875	**11880**	5394	–	–	–	–	–	–	–	–	–	–	–	–	–	–	–
	OHL input shaft	**(A)**	**456**	476	–	–	–	–	–	–	–	–	–	–	–	–	–	–	–
	OHL output shaft **(B)**	3611	**3611**	3611	–	–	–	–	–	–	–	–	–	–	–	–	–	–	–

Service factor: 1.0

(A) (B) (C) - See footnotes page on inside back cover

Blank areas (-) indicate configuration not available

MSM 88

Size: MW883

Triple reduction – Clamp collar, three-piece coupled, separate

NEMA motor frame		56C			—			140TC			180TC			—			210TC		
IEC motor frame		71D			80D			90D			100D			112D			132D		
Separate group		71			80			90			100			112			132		
Ratio	Output Rating data	3450	1750	1160	3450	1750	1160	3450	1750	1160	3450	1750	1160	3450	1750	1160	3450	1750	1160
	Output RPM	–	–	–	–	–	–	–	–	–	87	**44**	29	87	**44**	29	87	**44**	29
	Input Hp (max) **(C)**	–	–	–	–	–	–	–	–	–	19.63	**10.36**	6.87	19.63	**11.74**	7.78	19.63	**11.74**	7.78
39.78	Output torque, in–lb	–	–	–	–	–	–	–	–	–	14266	**14837**	14837	14266	**16817**	16817	14266	**16817**	16817
	OHL input shaft	–	–	–	–	–	–	–	–	–	**(A)**	**713**	742	**(A)**	**840**	874	**(A)**	**958**	997
	OHL output shaft **(B)**	–	–	–	–	–	–	–	–	–	3611	**3611**	3611	3611	**3611**	3611	3611	**3611**	3611
	Output RPM	–	–	–	–	–	–	–	–	–	72	**36**	24	72	**36**	24	72	**36**	24
	Input Hp (max) **(C)**	–	–	–	–	–	–	–	–	–	17.63	**9.73**	6.45	17.63	**9.73**	6.45	17.63	**9.73**	6.45
47.99	Output torque, in–lb	–	–	–	–	–	–	–	–	–	15456	**16817**	16817	15456	**16817**	16817	15456	**16817**	16817
	OHL input shaft	–	–	–	–	–	–	–	–	–	**(A)**	**713**	742	**(A)**	**839**	874	**(A)**	**958**	997
	OHL output shaft **(B)**	–	–	–	–	–	–	–	–	–	3611	**3611**	3611	3611	**3611**	3611	3611	**3611**	3611
	Output RPM	–	–	–	60	**30**	20	60	**30**	20	60	**30**	20	60	**30**	20	60	**30**	20
	Input Hp (max) **(C)**	–	–	–	4.85	**2.46**	1.63	9.86	**5.00**	3.32	15.83	**8.11**	5.37	15.83	**8.11**	5.37	15.83	**8.11**	5.37
57.59	Output torque, in–lb	–	–	–	5097	**5097**	5097	10376	**10376**	10376	16656	**16817**	16817	16656	**16817**	16817	16656	**16817**	16817
	OHL input shaft	–	–	–	**(A)**	**346**	360	**(A)**	**454**	473	**(A)**	**707**	737	**(A)**	**842**	877	**(A)**	**959**	998
	OHL output shaft **(B)**	–	–	–	3611	**3611**	3611	3611	**3611**	3611	3611	**3611**	3611	3611	**3611**	3611	3611	**3611**	3611
	Output RPM	–	–	–	51	**26**	17	51	**26**	17	51	**26**	17	51	**26**	17	51	**26**	17
	Input Hp (max) **(C)**	–	–	–	4.85	**2.46**	1.63	9.86	**5.00**	3.32	13.64	**6.92**	4.59	13.64	**6.92**	4.59	13.64	**6.92**	4.59
67.50	Output torque, in–lb	–	–	–	5975	**5975**	5975	12163	**12163**	12163	16817	**16817**	16817	16817	**16817**	16817	16817	**16817**	16817
	OHL input shaft	–	–	–	**(A)**	**346**	360	**(A)**	**452**	471	**(A)**	**710**	736	**(A)**	**844**	878	**(A)**	**959**	998
	OHL output shaft **(B)**	–	–	–	3611	**3611**	3611	3611	**3611**	3611	3611	**3611**	3611	3611	**3611**	3611	3611	**3611**	3611
	Output RPM	–	–	–	43	**22**	14	43	**22**	14	43	**22**	14	43	**22**	14	43	**22**	14
	Input Hp (max) **(C)**	–	–	–	4.85	**2.46**	1.63	9.86	**5.00**	3.32	11.44	**5.80**	3.85	11.44	**5.80**	3.85	11.44	**5.80**	3.85
80.45	Output torque, in–lb	–	–	–	7121	**7121**	7121	14496	**14496**	14496	16817	**16817**	16817	16817	**16817**	16817	16817	**16817**	16817
	OHL input shaft	–	–	–	**(A)**	**346**	360	**(A)**	**456**	474	**(A)**	**710**	739	**(A)**	**844**	879	**(A)**	**959**	998
	OHL output shaft **(B)**	–	–	–	3611	**3611**	3611	3611	**3611**	3611	3611	**3611**	3611	3611	**3611**	3611	3611	**3611**	3611
	Output RPM	40	**20**	13	40	**20**	13	40	**20**	13	40	**20**	13	40	**20**	13	40	**20**	13
	Input Hp (max) **(C)**	3.98	**2.02**	1.34	4.85	**2.46**	1.63	9.86	**5.00**	3.25	10.55	**5.35**	3.55	10.55	**5.35**	3.55	10.55	**5.35**	3.55
87.25	Output torque, in–lb	6344	**6344**	6344	7723	**7723**	7723	15721	**15721**	15414	16817	**16817**	16817	16817	**16817**	16817	16817	**16817**	16817
	OHL input shaft	**(A)**	**219**	226	**(A)**	**346**	360	**(A)**	**456**	474	**(A)**	**711**	741	**(A)**	**845**	879	**(A)**	**951**	990
	OHL output shaft **(B)**	3611	**3611**	3611	3611	**3611**	3611	3611	**3611**	3611	3611	**3611**	3611	3611	**3611**	3611	3611	**3611**	3611
	Output RPM	35	**18**	12	35	**18**	12	35	**18**	12	35	**18**	12	35	**18**	12	35	**18**	12
	Input Hp (max) **(C)**	3.98	**2.02**	1.34	4.85	**2.46**	1.63	9.45	**4.79**	3.11	9.45	**4.79**	3.18	9.45	**4.79**	3.18	9.45	**4.79**	3.18
97.39	Output torque, in–lb	7081	**7081**	7081	8620	**8620**	8620	16817	**16817**	16442	16817	**16817**	16817	16817	**16817**	16817	16817	**16817**	16817
	OHL input shaft	**(A)**	**219**	228	**(A)**	**346**	360	**(A)**	**456**	475	**(A)**	**712**	742	**(A)**	**845**	879	**(A)**	**951**	990
	OHL output shaft **(B)**	3611	**3611**	3611	3611	**3611**	3611	3611	**3611**	3611	3611	**3611**	3611	3611	**3611**	3611	3611	**3611**	3611
	Output RPM	33	**17**	11	33	**17**	11	33	**17**	11	33	**17**	11	33	**17**	11	33	**17**	11
	Input Hp (max) **(C)**	3.98	**2.02**	1.34	4.85	**2.46**	1.63	8.73	**4.43**	2.93	8.73	**4.43**	2.93	8.73	**4.43**	2.93	8.73	**4.43**	2.93
105.48	Output torque, in–lb	7669	**7669**	7669	9336	**9336**	9336	16817	**16817**	16817	16817	**16817**	16817	16817	**16817**	16817	16817	**16817**	16817
	OHL input shaft	**(A)**	**218**	227	**(A)**	**346**	360	**(A)**	**456**	475	**(A)**	**713**	742	**(A)**	**845**	879	**(A)**	**953**	991
	OHL output shaft **(B)**	3611	**3611**	3611	3611	**3611**	3611	3611	**3611**	3611	3611	**3611**	3611	3611	**3611**	3611	3611	**3611**	3611
	Output RPM	29	**15**	10	29	**15**	10	29	**15**	10	29	**15**	10	29	**15**	10	29	**15**	10
	Input Hp (max) **(C)**	3.98	**2.02**	1.34	4.85	**2.46**	1.63	7.70	**3.91**	2.59	7.70	**3.91**	2.59	7.70	**3.91**	2.59	7.70	**3.91**	2.59
119.55	Output torque, in–lb	8692	**8692**	8692	10582	**10582**	10582	16817	**16817**	16817	16817	**16817**	16817	16817	**16817**	16817	16817	**16817**	16817
	OHL input shaft	**(A)**	**217**	226	**(A)**	**346**	360	**(A)**	**457**	475	**(A)**	**714**	743	**(A)**	**845**	879	**(A)**	**954**	993
	OHL output shaft **(B)**	3611	**3611**	3611	3611	**3611**	3611	3611	**3611**	3611	3611	**3611**	3611	3611	**3611**	3611	3611	**3611**	3611
	Output RPM	27	**14**	9	27	**14**	9	27	**14**	9	27	**14**	9	27	**14**	9	27	**14**	9
	Input Hp (max) **(C)**	3.88	**2.02**	1.34	4.85	**2.46**	1.63	7.15	**3.63**	2.40	7.15	**3.63**	2.40	7.15	**3.63**	2.40	7.15	**3.63**	2.40
128.79	Output torque, in–lb	9140	**9364**	9364	11399	**11399**	11399	16817	**16817**	16817	16817	**16817**	16817	16817	**16817**	16817	16817	**16817**	16817
	OHL input shaft	**(A)**	**218**	227	**(A)**	**346**	359	**(A)**	**457**	475	**(A)**	**714**	743	**(A)**	**845**	879	**(A)**	**955**	994
	OHL output shaft **(B)**	3611	**3611**	3611	3611	**3611**	3611	3611	**3611**	3611	3611	**3611**	3611	3611	**3611**	3611	3611	**3611**	3611
	Output RPM	25	**13**	8	25	**13**	8	25	**13**	8	25	**13**	8	25	**13**	8	25	**13**	8
	Input Hp (max) **(C)**	3.66	**1.99**	1.34	4.85	**2.46**	1.63	6.61	**3.35**	2.22	6.61	**3.35**	2.22	6.61	**3.35**	2.22	6.61	**3.35**	2.22
139.26	Output torque, in–lb	9302	**9962**	10125	12326	**12326**	12326	16817	**16817**	16817	16817	**16817**	16817	16817	**16817**	16817	16817	**16817**	16817
	OHL input shaft	**(A)**	**217**	226	**(A)**	**345**	359	**(A)**	**453**	471	**(A)**	**714**	743	**(A)**	**845**	879	**(A)**	**956**	995
	OHL output shaft **(B)**	3611	**3611**	3611	3611	**3611**	3611	3611	**3611**	3611	3611	**3611**	3611	3611	**3611**	3611	3611	**3611**	3611

Service factor: 1.0

(A) (B) (C) - See footnotes page on inside back cover

Blank areas (-) indicate configuration not available

MSM 88

Size: MW883

Triple reduction – Clamp collar, three-piece coupled, separate

NEMA motor frame		56C			—			140TC			180TC			—			210TC		
IEC motor frame		71D			80D			90D			100D			112D			132D		
Separate group		71			80			90			100			112			132		
Ratio	Output Rating data	3450	1750	1160	3450	1750	1160	3450	1750	1160	3450	1750	1160	3450	1750	1160	3450	1750	1160
	Output RPM	23	12	8	23	12	8	23	12	8	23	12	8	23	12	8	23	12	8
	Input Hp (max) (C)	3.43	1.86	1.28	4.85	2.46	1.63	6.09	3.09	2.05	6.09	3.09	2.05	6.09	3.09	2.05	6.09	3.09	2.05
151.22	Output torque, in–lb	9467	10139	10508	13385	13385	13385	16817	16817	16817	16817	16817	16817	16817	16817	16817	16817	16817	16817
	OHL input shaft	(A)	218	226	(A)	345	359	(A)	454	471	(A)	714	743	(A)	837	879	(A)	956	996
	OHL output shaft (B)	3611	3611	3611	3611	3611	3611	3611	3611	3611	3611	3611	3611	3611	3611	3611	3611	3611	3611
	Output RPM	21	10	7	21	10	7	21	10	7	21	10	7	21	10	7	21	10	7
	Input Hp (max) (C)	3.16	1.72	1.18	4.85	2.46	1.63	5.51	2.79	1.85	5.51	2.79	1.85	5.51	2.79	1.85	5.51	2.79	1.85
167.20	Output torque, in–lb	9655	10342	10719	14799	14799	14799	16817	16817	16817	16817	16817	16817	16817	16817	16817	16817	16817	16817
	OHL input shaft	(A)	218	226	(A)	344	358	(A)	453	472	(A)	715	743	(A)	838	872	(A)	957	996
	OHL output shaft (B)	3611	3611	3611	3611	3611	3611	3611	3611	3611	3611	3611	3611	3611	3611	3611	3611	3611	3611
	Output RPM	19	10	6	19	10	6	19	10	6	19	10	6	19	10	6	19	10	6
	Input Hp (max) (C)	2.96	1.61	1.11	4.85	2.46	1.56	5.08	2.58	1.71	5.08	2.58	1.71	5.08	2.58	1.71	5.08	2.58	1.71
181.13	Output torque, in–lb	9797	10495	10879	16032	16032	15380	16817	16817	16817	16817	16817	16817	16817	16817	16817	16817	16817	16817
	OHL input shaft	(A)	218	226	(A)	344	358	(A)	454	473	(A)	715	744	(A)	839	873	(A)	957	997
	OHL output shaft (B)	3611	3611	3611	3611	3611	3611	3611	3611	3611	3611	3611	3611	3611	3611	3611	3611	3611	3611
	Output RPM	17	9	6	17	9	6	17	9	6	17	9	6	17	9	6	–	–	–
	Input Hp (max) (C)	2.68	1.46	1.00	4.51	2.29	1.45	4.51	2.29	1.52	4.51	2.29	1.52	4.51	2.29	1.52	–	–	–
204.11	Output torque, in–lb	10001	10707	11098	16817	16817	16112	16817	16817	16817	16817	16817	16817	16817	16817	16817	–	–	–
	OHL input shaft	(A)	218	227	(A)	344	358	(A)	455	473	(A)	715	744	(A)	840	874	–	–	–
	OHL output shaft (B)	3611	3611	3611	3611	3611	3611	3611	3611	3611	3611	3611	3611	3611	3611	3611	–	–	–
	Output RPM	15	8	5	15	8	5	15	8	5	15	8	5	15	8	5	–	–	–
	Input Hp (max) (C)	2.48	1.35	0.93	4.12	2.09	1.37	4.12	2.09	1.39	4.12	2.09	1.39	4.12	2.09	1.39	–	–	–
223.47	Output torque, in–lb	10138	10859	11254	16817	16817	16681	16817	16817	16817	16817	16817	16817	16817	16817	16817	–	–	–
	OHL input shaft	(A)	218	227	(A)	344	358	(A)	456	474	(A)	715	744	(A)	841	875	–	–	–
	OHL output shaft (B)	3611	3611	3611	3611	3611	3611	3611	3611	3611	3611	3611	3611	3611	3611	3611	–	–	–
	Output RPM	14	7	5	14	7	5	14	7	5	–	–	–	–	–	–	–	–	–
	Input Hp (max) (C)	2.26	1.23	0.84	3.70	1.88	1.24	3.70	1.88	1.24	–	–	–	–	–	–	–	–	–
248.92	Output torque, in–lb	10293	11024	11427	16817	16817	16817	16817	16817	16817	–	–	–	–	–	–	–	–	–
	OHL input shaft	(A)	219	227	(A)	345	359	(A)	456	474	–	–	–	–	–	–	–	–	–
	OHL output shaft (B)	3611	3611	3611	3611	3611	3611	3611	3611	3611	–	–	–	–	–	–	–	–	–
	Output RPM	12	6	4	12	6	4	12	6	4	–	–	–	–	–	–	–	–	–
	Input Hp (max) (C)	2.01	1.09	0.75	3.23	1.64	1.09	3.23	1.64	1.09	–	–	–	–	–	–	–	–	–
284.63	Output torque, in–lb	10469	11212	11621	16817	16817	16817	16817	16817	16817	–	–	–	–	–	–	–	–	–
	OHL input shaft	(A)	219	227	(A)	345	359	(A)	456	475	–	–	–	–	–	–	–	–	–
	OHL output shaft (B)	3611	3611	3611	3611	3611	3611	3611	3611	3611	–	–	–	–	–	–	–	–	–
	Output RPM	11	6	4	11	6	4	11	6	4	–	–	–	–	–	–	–	–	–
	Input Hp (max) (C)	1.84	1.00	0.69	2.92	1.48	0.98	2.92	1.48	0.98	–	–	–	–	–	–	–	–	–
315.64	Output torque, in–lb	10593	11342	11758	16817	16817	16817	16817	16817	16817	–	–	–	–	–	–	–	–	–
	OHL input shaft	(A)	219	228	(A)	346	359	(A)	457	475	–	–	–	–	–	–	–	–	–
	OHL output shaft (B)	3611	3611	3611	3611	3611	3611	3611	3611	3611	–	–	–	–	–	–	–	–	–
	Output RPM	10	5	3	10	5	3	10	5	3	–	–	–	–	–	–	–	–	–
	Input Hp (max) (C)	1.67	0.91	0.62	2.17	1.33	0.81	2.17	1.33	0.81	–	–	–	–	–	–	–	–	–
350.03	Output torque, in–lb	10703	11465	11884	13869	16817	15343	13869	16817	15343	–	–	–	–	–	–	–	–	–
	OHL input shaft	(A)	219	228	(A)	346	360	(A)	457	476	–	–	–	–	–	–	–	–	–
	OHL output shaft (B)	3611	3611	3611	3611	3611	3611	3611	3611	3611	–	–	–	–	–	–	–	–	–

Service factor: 1.0

(A) (B) (C) - See footnotes page on inside back cover

Blank areas (-) indicate configuration not available

MSM 88

Size: MW884

Four-stage reduction – Clamp collar, three-piece coupled, separate

NEMA motor frame		56C			—			140TC			180TC			—		
IEC motor frame		71D			80D			90D			100D			112D		
Separate group		71			80			90			100			112		
Ratio	Output Rating data	3450	1750	1160	3450	1750	1160	3450	1750	1160	3450	1750	1160	3450	1750	1160
	Output RPM	10.09	**5.12**	3.42	10.09	**5.12**	3.42	10.09	**5.12**	3.42	10.09	**5.12**	3.42	10.09	**5.12**	3.42
	Input Hp (max) **(C)**	2.69	**1.37**	0.91	2.69	**1.37**	0.91	2.69	**1.37**	0.91	2.69	**1.37**	0.91	2.69	**1.37**	0.91
341.76	Output torque, in–lb	16817	**16817**	16817	16817	**16817**	16817	16817	**16817**	16817	16817	**16817**	16817	16817	**16817**	16817
	OHL input shaft	**(A)**	**(A)**	**(A)**	**(A)**	**(A)**	**(A)**	**(A)**	**(A)**	**(A)**	**(A)**	**(A)**	**(A)**	**(A)**	**(A)**	**(A)**
	OHL output shaft **(B)**	3611	**3611**	3611	3611	**3611**	3611	3611	**3611**	3611	3611	**3611**	3611	3611	**3611**	3611
	Output RPM	9.47	**4.80**	3.21	9.47	**4.80**	3.21	9.47	**4.80**	3.21	9.47	**4.80**	3.21	9.47	**4.80**	3.21
	Input Hp (max) **(C)**	2.53	**1.28**	0.86	2.53	**1.28**	0.86	2.53	**1.28**	0.86	2.53	**1.28**	0.86	2.53	**1.28**	0.86
364.44	Output torque, in–lb	16817	**16817**	16817	16817	**16817**	16817	16817	**16817**	16817	16817	**16817**	16817	16817	**16817**	16817
	OHL input shaft	**(A)**	**(A)**	**(A)**	**(A)**	**(A)**	**(A)**	**(A)**	**(A)**	**(A)**	**(A)**	**(A)**	**(A)**	**(A)**	**(A)**	**(A)**
	OHL output shaft **(B)**	3611	**3611**	3611	3611	**3611**	3611	3611	**3611**	3611	3611	**3611**	3611	3611	**3611**	3611
	Output RPM	8.40	**4.26**	2.85	8.40	**4.26**	2.85	8.40	**4.26**	2.85	8.40	**4.26**	2.85	8.40	**4.26**	2.85
	Input Hp (max) **(C)**	2.24	**1.14**	0.76	2.24	**1.14**	0.76	2.24	**1.14**	0.76	2.24	**1.14**	0.76	2.24	**1.14**	0.76
410.82	Output torque, in–lb	16817	**16817**	16817	16817	**16817**	16817	16817	**16817**	16817	16817	**16817**	16817	16817	**16817**	16817
	OHL input shaft	**(A)**	**(A)**	**(A)**	**(A)**	**(A)**	**(A)**	**(A)**	**(A)**	**(A)**	**(A)**	**(A)**	**(A)**	**(A)**	**(A)**	**(A)**
	OHL output shaft **(B)**	3611	**3611**	3611	3611	**3611**	3611	3611	**3611**	3611	3611	**3611**	3611	3611	**3611**	3611
	Output RPM	8.11	**4.11**	2.75	8.11	**4.11**	2.75	8.11	**4.11**	2.75	8.11	**4.11**	2.75	8.11	**4.11**	2.75
	Input Hp (max) **(C)**	2.16	**1.10**	0.73	2.16	**1.10**	0.73	2.16	**1.10**	0.73	2.16	**1.10**	0.73	2.16	**1.10**	0.73
425.60	Output torque, in–lb	16817	**16817**	16817	16817	**16817**	16817	16817	**16817**	16817	16817	**16817**	16817	16817	**16817**	16817
	OHL input shaft	**(A)**	**(A)**	**(A)**	**(A)**	**(A)**	**(A)**	**(A)**	**(A)**	**(A)**	**(A)**	**(A)**	**(A)**	**(A)**	**(A)**	**(A)**
	OHL output shaft **(B)**	3611	**3611**	3611	3611	**3611**	3611	3611	**3611**	3611	3611	**3611**	3611	3611	**3611**	3611
	Output RPM	7.08	**3.59**	2.40	7.08	**3.59**	2.40	7.08	**3.59**	2.40	7.08	**3.59**	2.40	7.08	**3.59**	2.40
	Input Hp (max) **(C)**	1.89	**0.96**	0.64	1.89	**0.96**	0.64	1.89	**0.96**	0.64	1.89	**0.96**	0.64	1.89	**0.96**	0.64
487.32	Output torque, in–lb	16817	**16817**	16817	16817	**16817**	16817	16817	**16817**	16817	16817	**16817**	16817	16817	**16817**	16817
	OHL input shaft	**(A)**	**(A)**	**(A)**	**(A)**	**(A)**	**(A)**	**(A)**	**(A)**	**(A)**	**(A)**	**(A)**	**(A)**	**(A)**	**(A)**	**(A)**
	OHL output shaft **(B)**	3611	**3611**	3611	3611	**3611**	3611	3611	**3611**	3611	3611	**3611**	3611	3611	**3611**	3611
	Output RPM	6.40	**3.25**	2.17	6.40	**3.25**	2.17	6.40	**3.25**	2.17	6.40	**3.25**	2.17	6.40	**3.25**	2.17
	Input Hp (max) **(C)**	1.71	**0.87**	0.58	1.71	**0.87**	0.58	1.71	**0.87**	0.58	1.71	**0.87**	0.58	1.71	**0.87**	0.58
538.94	Output torque, in–lb	16817	**16817**	16817	16817	**16817**	16817	16817	**16817**	16817	16817	**16817**	16817	16817	**16817**	16817
	OHL input shaft	**(A)**	**(A)**	**(A)**	**(A)**	**(A)**	**(A)**	**(A)**	**(A)**	**(A)**	**(A)**	**(A)**	**(A)**	**(A)**	**(A)**	**(A)**
	OHL output shaft **(B)**	3611	**3611**	3611	3611	**3611**	3611	3611	**3611**	3611	3611	**3611**	3611	3611	**3611**	3611
	Output RPM	6.06	**3.07**	2.05	6.06	**3.07**	2.05	6.06	**3.07**	2.05	6.06	**3.07**	2.05	6.06	**3.07**	2.05
	Input Hp (max) **(C)**	1.62	**0.82**	0.55	1.62	**0.82**	0.55	1.62	**0.82**	0.55	1.62	**0.82**	0.55	1.62	**0.82**	0.55
569.73	Output torque, in–lb	16817	**16817**	16817	16817	**16817**	16817	16817	**16817**	16817	16817	**16817**	16817	16817	**16817**	16817
	OHL input shaft	**(A)**	**(A)**	**(A)**	**(A)**	**(A)**	**(A)**	**(A)**	**(A)**	**(A)**	**(A)**	**(A)**	**(A)**	**(A)**	**(A)**	**(A)**
	OHL output shaft **(B)**	3611	**3611**	3611	3611	**3611**	3611	3611	**3611**	3611	3611	**3611**	3611	3611	**3611**	3611
	Output RPM	5.59	**2.84**	1.90	5.59	**2.84**	1.90	5.59	**2.84**	1.90	5.59	**2.84**	1.90	5.59	**2.84**	1.90
	Input Hp (max) **(C)**	1.49	**0.76**	0.51	1.49	**0.76**	0.51	1.49	**0.76**	0.51	1.49	**0.76**	0.51	1.49	**0.76**	0.51
617.06	Output torque, in–lb	16817	**16817**	16817	16817	**16817**	16817	16817	**16817**	16817	16817	**16817**	16817	16817	**16817**	16817
	OHL input shaft	**(A)**	**(A)**	**(A)**	**(A)**	**(A)**	**(A)**	**(A)**	**(A)**	**(A)**	**(A)**	**(A)**	**(A)**	**(A)**	**(A)**	**(A)**
	OHL output shaft **(B)**	3611	**3611**	3611	3611	**3611**	3611	3611	**3611**	3611	3611	**3611**	3611	3611	**3611**	3611
	Output RPM	5.23	**2.65**	1.77	5.23	**2.65**	1.77	5.23	**2.65**	1.77	5.23	**2.65**	1.77	5.23	**2.65**	1.77
	Input Hp (max) **(C)**	1.40	**0.71**	0.47	1.40	**0.71**	0.47	1.40	**0.71**	0.47	1.40	**0.71**	0.47	1.40	**0.71**	0.47
659.24	Output torque, in–lb	16817	**16817**	16817	16817	**16817**	16817	16817	**16817**	16817	16817	**16817**	16817	16817	**16817**	16817
	OHL input shaft	**(A)**	**(A)**	**(A)**	**(A)**	**(A)**	**(A)**	**(A)**	**(A)**	**(A)**	**(A)**	**(A)**	**(A)**	**(A)**	**(A)**	**(A)**
	OHL output shaft **(B)**	3611	**3611**	3611	3611	**3611**	3611	3611	**3611**	3611	3611	**3611**	3611	3611	**3611**	3611
	Output RPM	4.88	**2.47**	1.65	4.88	**2.47**	1.65	4.88	**2.47**	1.65	4.88	**2.47**	1.65	4.88	**2.47**	1.65
	Input Hp (max) **(C)**	1.30	**0.66**	0.44	1.30	**0.66**	0.44	1.30	**0.66**	0.44	1.30	**0.66**	0.44	1.30	**0.66**	0.44
707.44	Output torque, in–lb	16817	**16817**	16817	16817	**16817**	16817	16817	**16817**	16817	16817	**16817**	16817	16817	**16817**	16817
	OHL input shaft	**(A)**	**(A)**	**(A)**	**(A)**	**(A)**	**(A)**	**(A)**	**(A)**	**(A)**	**(A)**	**(A)**	**(A)**	**(A)**	**(A)**	**(A)**
	OHL output shaft **(B)**	3611	**3611**	3611	3611	**3611**	3611	3611	**3611**	3611	3611	**3611**	3611	3611	**3611**	3611
	Output RPM	4.47	**2.27**	1.51	4.47	**2.27**	1.51	4.47	**2.27**	1.51	4.47	**2.27**	1.51	4.47	**2.27**	1.51
	Input Hp (max) **(C)**	1.19	**0.60**	0.40	1.19	**0.60**	0.40	1.19	**0.60**	0.40	1.19	**0.60**	0.40	1.19	**0.60**	0.40
772.46	Output torque, in–lb	16817	**16817**	16817	16817	**16817**	16817	16817	**16817**	16817	16817	**16817**	16817	16817	**16817**	16817
	OHL input shaft	(A)	(A)	(A)	(A)	(A)	(A)	(A)	(A)	(A)	(A)	(A)	(A)	(A)	(A)	(A)
	OHL output shaft **(B)**	3611	**3611**	3611	3611	**3611**	3611	3611	**3611**	3611	3611	**3611**	3611	3611	**3611**	3611

Service factor: 1.0

(A) (B) (C) - See footnotes page on inside back cover

Blank areas (-) indicate configuration not available

MSM 88

Size: MW884

Four-stage reduction – Clamp collar, three-piece coupled, separate

NEMA motor frame		56C			—			140TC			180TC			—		
IEC motor frame		71D			80D			90D			100D			112D		
Separate group		71			80			90			100			112		
Ratio	Output Rating data	3450	1750	1160	3450	1750	1160	3450	1750	1160	3450	1750	1160	3450	1750	1160
	Output RPM	4.23	**2.15**	1.44	4.23	**2.15**	1.44	4.23	**2.15**	1.44	4.23	**2.15**	1.44	4.23	**2.15**	1.44
	Input Hp (max) **(C)**	1.13	**0.57**	0.38	1.13	**0.57**	0.38	1.13	**0.57**	0.38	1.13	**0.57**	0.38	1.13	**0.57**	0.38
814.67	Output torque, in–lb	16817	**16817**	16817	16817	**16817**	16817	16817	**16817**	16817	16817	**16817**	16817	16817	**16817**	16817
	OHL input shaft	**(A)**	(A)	(A)	(A)	(A)	(A)	(A)	(A)	(A)	(A)	(A)	(A)	(A)	(A)	(A)
	OHL output shaft **(B)**	3611	**3611**	3611	3611	**3611**	3611	3611	**3611**	3611	3611	**3611**	3611	3611	**3611**	3611
	Output RPM	3.89	**1.97**	1.32	3.89	**1.97**	1.32	3.89	**1.97**	1.32	3.89	**1.97**	1.32	3.89	**1.97**	1.32
	Input Hp (max) **(C)**	1.04	**0.53**	0.35	1.04	**0.53**	0.35	1.04	**0.53**	0.35	1.04	**0.53**	0.35	1.04	**0.53**	0.35
886.16	Output torque, in–lb	16817	**16817**	16817	16817	**16817**	16817	16817	**16817**	16817	16817	**16817**	16817	16817	**16817**	16817
	OHL input shaft	**(A)**	**(A)**	**(A)**	**(A)**	**(A)**	**(A)**	**(A)**	**(A)**	**(A)**	**(A)**	**(A)**	**(A)**	**(A)**	**(A)**	**(A)**
	OHL output shaft **(B)**	3611	**3611**	3611	3611	**3611**	3611	3611	**3611**	3611	3611	**3611**	3611	3611	**3611**	3611
	Output RPM	3.75	**1.90**	1.27	3.75	**1.90**	1.27	3.75	**1.90**	1.27	3.75	**1.90**	1.27	3.75	**1.90**	1.27
	Input Hp (max) **(C)**	1.00	**0.51**	0.34	1.00	**0.51**	0.34	1.00	**0.51**	0.34	1.00	**0.51**	0.34	1.00	**0.51**	0.34
920.14	Output torque, in–lb	16817	**16817**	16817	16817	**16817**	16817	16817	**16817**	16817	16817	**16817**	16817	16817	**16817**	16817
	OHL input shaft	**(A)**	**(A)**	**(A)**	**(A)**	**(A)**	**(A)**	**(A)**	**(A)**	**(A)**	**(A)**	**(A)**	**(A)**	**(A)**	**(A)**	**(A)**
	OHL output shaft **(B)**	3611	**3611**	3611	3611	**3611**	3611	3611	**3611**	3611	3611	**3611**	3611	3611	**3611**	3611
	Output RPM	3.40	**1.73**	1.15	3.40	**1.73**	1.15	3.40	**1.73**	1.15	3.40	**1.73**	1.15	3.40	**1.73**	1.15
	Input Hp (max) **(C)**	0.91	**0.46**	0.31	0.91	**0.46**	0.31	0.91	**0.46**	0.31	0.91	**0.46**	0.31	0.91	**0.46**	0.31
1013.28	Output torque, in–lb	16817	**16817**	16817	16817	**16817**	16817	16817	**16817**	16817	16817	**16817**	16817	16817	**16817**	16817
	OHL input shaft	**(A)**	**(A)**	**(A)**	**(A)**	**(A)**	**(A)**	**(A)**	**(A)**	**(A)**	**(A)**	**(A)**	**(A)**	**(A)**	**(A)**	**(A)**
	OHL output shaft **(B)**	3611	**3611**	3611	3611	**3611**	3611	3611	**3611**	3611	3611	**3611**	3611	3611	**3611**	3611
	Output RPM	3.28	**1.66**	1.11	3.28	**1.66**	1.11	3.28	**1.66**	1.11	–	–	–	–	–	–
	Input Hp (max) **(C)**	0.87	**0.44**	0.30	0.87	**0.44**	0.30	0.87	**0.44**	0.30	–	–	–	–	–	–
1052.21	Output torque, in–lb	16817	**16817**	16817	16817	**16817**	16817	16817	**16817**	16817	–	–	–	–	–	–
	OHL input shaft	**(A)**	**(A)**	**(A)**	**(A)**	**(A)**	**(A)**	**(A)**	**(A)**	**(A)**	–	–	–	–	–	–
	OHL output shaft **(B)**	3611	**3611**	3611	3611	**3611**	3611	3611	**3611**	3611	–	–	–	–	–	–
	Output RPM	2.95	**1.49**	1.00	2.95	**1.49**	1.00	2.95	**1.49**	1.00	–	–	–	–	–	–
	Input Hp (max) **(C)**	0.79	**0.40**	0.27	0.79	**0.40**	0.27	0.79	**0.40**	0.27	–	–	–	–	–	–
1170.70	Output torque, in–lb	16817	**16817**	16817	16817	**16817**	16817	16817	**16817**	16817	–	–	–	–	–	–
	OHL input shaft	**(A)**	**(A)**	**(A)**	**(A)**	**(A)**	**(A)**	**(A)**	**(A)**	**(A)**	–	–	–	–	–	–
	OHL output shaft **(B)**	3611	**3611**	3611	3611	**3611**	3611	3611	**3611**	3611	–	–	–	–	–	–
	Output RPM	2.82	**1.43**	0.96	2.82	**1.43**	0.96	2.82	**1.43**	0.96	2.82	**1.43**	0.96	2.82	**1.43**	0.96
	Input Hp (max) **(C)**	0.75	**0.38**	0.26	0.75	**0.38**	0.26	0.75	**0.38**	0.26	0.75	**0.38**	0.26	0.75	**0.38**	0.26
1221.53	Output torque, in–lb	16817	**16817**	16817	16817	**16817**	16817	16817	**16817**	16817	16817	**16817**	16817	16817	**16817**	16817
	OHL input shaft	**(A)**	**(A)**	**(A)**	**(A)**	**(A)**	**(A)**	**(A)**	**(A)**	**(A)**	**(A)**	**(A)**	**(A)**	**(A)**	**(A)**	**(A)**
	OHL output shaft **(B)**	3611	**3611**	3611	3611	**3611**	3611	3611	**3611**	3611	3611	**3611**	3611	3611	**3611**	3611
	Output RPM	2.67	**1.35**	0.91	2.67	**1.35**	0.91	2.67	**1.35**	0.91	2.67	**1.35**	0.91	2.67	**1.35**	0.91
	Input Hp (max) **(C)**	0.71	**0.36**	0.24	0.71	**0.36**	0.24	0.71	**0.36**	0.24	0.71	**0.36**	0.24	0.71	**0.36**	0.24
1292.02	Output torque, in–lb	16817	**16817**	16817	16817	**16817**	16817	16817	**16817**	16817	16817	**16817**	16817	16817	**16817**	16817
	OHL input shaft	**(A)**	**(A)**	**(A)**	**(A)**	**(A)**	**(A)**	**(A)**	**(A)**	**(A)**	**(A)**	**(A)**	**(A)**	**(A)**	**(A)**	**(A)**
	OHL output shaft **(B)**	3611	**3611**	3611	3611	**3611**	3611	3611	**3611**	3611	3611	**3611**	3611	3611	**3611**	3611
	Output RPM	2.55	**1.29**	0.86	2.55	**1.29**	0.86	2.55	**1.29**	0.86	2.55	**1.29**	0.86	2.55	**1.29**	0.86
	Input Hp (max) **(C)**	0.68	**0.34**	0.23	0.68	**0.34**	0.23	0.68	**0.34**	0.23	0.68	**0.34**	0.23	0.68	**0.34**	0.23
1354.62	Output torque, in–lb	16817	**16817**	16817	16817	**16817**	16817	16817	**16817**	16817	16817	**16817**	16817	16817	**16817**	16817
	OHL input shaft	**(A)**	**(A)**	**(A)**	**(A)**	**(A)**	**(A)**	**(A)**	**(A)**	**(A)**	**(A)**	**(A)**	**(A)**	**(A)**	**(A)**	**(A)**
	OHL output shaft **(B)**	3611	**3611**	3611	3611	**3611**	3611	3611	**3611**	3611	3611	**3611**	3611	3611	**3611**	3611
	Output RPM	2.41	**1.22**	0.82	2.41	**1.22**	0.82	2.41	**1.22**	0.82	2.41	**1.22**	0.82	–	–	–
	Input Hp (max) **(C)**	0.64	**0.33**	0.22	0.64	**0.33**	0.22	0.64	**0.33**	0.22	0.64	**0.33**	0.22	–	–	–
1428.77	Output torque, in–lb	16817	**16817**	16817	16817	**16817**	16817	16817	**16817**	16817	16817	**16817**	16817	–	–	–
	OHL input shaft	**(A)**	**(A)**	**(A)**	**(A)**	**(A)**	**(A)**	**(A)**	**(A)**	**(A)**	**(A)**	**(A)**	**(A)**	–	–	–
	OHL output shaft **(B)**	3611	**3611**	3611	3611	**3611**	3611	3611	**3611**	3611	3611	**3611**	3611	–	–	–
	Output RPM	2.27	**1.15**	0.77	2.27	**1.15**	0.77	2.27	**1.15**	0.77	–	–	–	–	–	–
	Input Hp (max) **(C)**	0.61	**0.31**	0.21	0.61	**0.31**	0.21	0.61	**0.31**	0.21	–	–	–	–	–	–
1519.85	Output torque, in–lb	16817	**16817**	16817	16817	**16817**	16817	16817	**16817**	16817	–	–	–	–	–	–
	OHL input shaft	**(A)**	**(A)**	**(A)**	**(A)**	**(A)**	**(A)**	**(A)**	**(A)**	**(A)**	–	–	–	–	–	–
	OHL output shaft **(B)**	3611	**3611**	3611	3611	**3611**	3611	3611	**3611**	3611	–	–	–	–	–	–

Service factor: 1.0

(A) (B) (C) - See footnotes page on inside back cover

Blank areas (-) indicate configuration not available

MSM 88

Size: MW884

Four-stage reduction – Clamp collar, three-piece coupled, separate

NEMA motor frame		56C			—			140TC			180TC			—		
IEC motor frame		71D			80D			90D			100D			112D		
Separate group		71			80			90			100			112		
Ratio	Output Rating data	3450	1750	1160	3450	1750	1160	3450	1750	1160	3450	1750	1160	3450	1750	1160
	Output RPM	2.13	**1.08**	0.72	2.13	**1.08**	0.72	2.13	**1.08**	0.72	2.13	**1.08**	0.72	2.13	**1.08**	0.72
	Input Hp (max) **(C)**	0.57	**0.29**	0.19	0.57	**0.29**	0.19	0.57	**0.29**	0.19	0.57	**0.29**	0.19	0.57	**0.29**	0.19
1617.14	Output torque, in–lb	16817	**16817**	16817	16817	**16817**	16817	16817	**16817**	16817	16817	**16817**	16817	16817	**16817**	16817
	OHL input shaft	**(A)**	**(A)**	**(A)**	**(A)**	**(A)**	**(A)**	**(A)**	**(A)**	**(A)**	**(A)**	**(A)**	**(A)**	**(A)**	**(A)**	**(A)**
	OHL output shaft **(B)**	3611	**3611**	3611	3611	**3611**	3611	3611	**3611**	3611	3611	**3611**	3611	3611	**3611**	3611
	Output RPM	2.06	**1.05**	0.70	2.06	**1.05**	0.70	2.06	**1.05**	0.70	–	–	–	–	–	–
	Input Hp (max) **(C)**	0.55	**0.28**	0.19	0.55	**0.28**	0.19	0.55	**0.28**	0.19	–	–	–	–	–	–
1672.00	Output torque, in–lb	16817	**16817**	16817	16817	**16817**	16817	16817	**16817**	16817	–	–	–	–	–	–
	OHL input shaft	**(A)**	**(A)**	**(A)**	**(A)**	**(A)**	**(A)**	**(A)**	**(A)**	**(A)**	–	–	–	–	–	–
	OHL output shaft **(B)**	3611	**3611**	3611	3611	**3611**	3611	3611	**3611**	3611	–	–	–	–	–	–
	Output RPM	1.94	**0.98**	0.66	1.94	**0.98**	0.66	1.94	**0.98**	0.66	1.94	**0.98**	0.66	1.94	**0.98**	0.66
	Input Hp (max) **(C)**	0.52	**0.26**	0.18	0.52	**0.26**	0.18	0.52	**0.26**	0.18	0.52	**0.26**	0.18	0.52	**0.26**	0.18
1778.15	Output torque, in–lb	16817	**16817**	16817	16817	**16817**	16817	16817	**16817**	16817	16817	**16817**	16817	16817	**16817**	16817
	OHL input shaft	**(A)**	**(A)**	**(A)**	**(A)**	**(A)**	**(A)**	**(A)**	**(A)**	**(A)**	**(A)**	**(A)**	**(A)**	**(A)**	**(A)**	**(A)**
	OHL output shaft **(B)**	3611	**3611**	3611	3611	**3611**	3611	3611	**3611**	3611	3611	**3611**	3611	3611	**3611**	3611
	Output RPM	1.83	**0.93**	0.62	1.83	**0.93**	0.62	–	–	–	–	–	–	–	–	–
	Input Hp (max) **(C)**	0.49	**0.25**	0.17	0.49	**0.25**	0.17	–	–	–	–	–	–	–	–	–
1889.36	Output torque, in–lb	16817	**16817**	16817	16817	**16817**	16817	–	–	–	–	–	–	–	–	–
	OHL input shaft	**(A)**	**(A)**	**(A)**	**(A)**	**(A)**	**(A)**	–	–	–	–	–	–	–	–	–
	OHL output shaft **(B)**	3611	**3611**	3611	3611	**3611**	3611	–	–	–	–	–	–	–	–	–
	Output RPM	1.69	**0.86**	0.57	1.69	**0.86**	0.57	1.69	**0.86**	0.57	–	–	–	–	–	–
	Input Hp (max) **(C)**	0.45	**0.23**	0.15	0.45	**0.23**	0.15	0.45	**0.23**	0.15	–	–	–	–	–	–
2041.10	Output torque, in–lb	16817	**16817**	16817	16817	**16817**	16817	16817	**16817**	16817	–	–	–	–	–	–
	OHL input shaft	**(A)**	**(A)**	**(A)**	**(A)**	**(A)**	**(A)**	**(A)**	**(A)**	**(A)**	–	–	–	–	–	–
	OHL output shaft **(B)**	3611	**3611**	3611	3611	**3611**	3611	3611	**3611**	3611	–	–	–	–	–	–
	Output RPM	1.56	**0.79**	0.53	1.56	**0.79**	0.53	1.56	**0.79**	0.53	1.56	**0.79**	0.53	–	–	–
	Input Hp (max) **(C)**	0.42	**0.21**	0.14	0.42	**0.21**	0.14	0.42	**0.21**	0.14	0.42	**0.21**	0.14	–	–	–
2209.48	Output torque, in–lb	16817	**16817**	16817	16817	**16817**	16817	16817	**16817**	16817	16817	**16817**	16817	–	–	–
	OHL input shaft	**(A)**	**(A)**	**(A)**	**(A)**	**(A)**	**(A)**	**(A)**	**(A)**	**(A)**	**(A)**	**(A)**	**(A)**	–	–	–
	OHL output shaft **(B)**	3611	**3611**	3611	3611	**3611**	3611	3611	**3611**	3611	3611	**3611**	3611	–	–	–
	Output RPM	1.52	**0.77**	0.52	1.52	**0.77**	0.52	1.52	**0.77**	0.52	–	–	–	–	–	–
	Input Hp (max) **(C)**	0.41	**0.21**	0.14	0.41	**0.21**	0.14	0.41	**0.21**	0.14	–	–	–	–	–	–
2262.68	Output torque, in–lb	16817	**16817**	16817	16817	**16817**	16817	16817	**16817**	16817	–	–	–	–	–	–
	OHL input shaft	**(A)**	**(A)**	**(A)**	**(A)**	**(A)**	**(A)**	**(A)**	**(A)**	**(A)**	–	–	–	–	–	–
	OHL output shaft **(B)**	3611	**3611**	3611	3611	**3611**	3611	3611	**3611**	3611	–	–	–	–	–	–
	Output RPM	1.39	**0.70**	0.47	1.39	**0.70**	0.47	1.39	**0.70**	0.47	–	–	–	–	–	–
	Input Hp (max) **(C)**	0.37	**0.19**	0.13	0.37	**0.19**	0.13	0.37	**0.19**	0.13	–	–	–	–	–	–
2489.20	Output torque, in–lb	16817	**16817**	16817	16817	**16817**	16817	16817	**16817**	16817	–	–	–	–	–	–
	OHL input shaft	**(A)**	**(A)**	**(A)**	**(A)**	**(A)**	**(A)**	**(A)**	**(A)**	**(A)**	–	–	–	–	–	–
	OHL output shaft **(B)**	3611	**3611**	3611	3611	**3611**	3611	3611	**3611**	3611	–	–	–	–	–	–
	Output RPM	1.33	**0.68**	0.45	1.33	**0.68**	0.45	1.33	**0.68**	0.45	–	–	–	–	–	–
	Input Hp (max) **(C)**	0.36	**0.18**	0.12	0.36	**0.18**	0.12	0.36	**0.18**	0.12	–	–	–	–	–	–
2587.29	Output torque, in–lb	16817	**16817**	16817	16817	**16817**	16817	16817	**16817**	16817	–	–	–	–	–	–
	OHL input shaft	**(A)**	**(A)**	**(A)**	**(A)**	**(A)**	**(A)**	**(A)**	**(A)**	**(A)**	–	–	–	–	–	–
	OHL output shaft **(B)**	3611	**3611**	3611	3611	**3611**	3611	3611	**3611**	3611	–	–	–	–	–	–

Service factor: 1.0

(A) (B) (C) - See footnotes page on inside back cover

Blank areas (-) indicate configuration not available

MSM 88

Size: MW885

Five-stage reduction – Clamp collar, three-piece coupled, separate

NEMA motor frame		56C			—			140TC			180TC			—		
IEC motor frame		71D			80D			90D			100D			112D		
Separate group		71			80			90			100			112		
Ratio	Output Rating data	3450	1750	1160	3450	1750	1160	3450	1750	1160	3450	1750	1160	3450	1750	1160
	Output RPM	1.54	**0.78**	0.52	1.54	**0.78**	0.52	1.54	**0.78**	0.52	1.54	**0.78**	0.52	1.54	**0.78**	0.52
	Input Hp (max) **(C)**	0.41	**0.21**	0.14	0.41	**0.21**	0.14	0.41	**0.21**	0.14	0.41	**0.21**	0.14	0.41	**0.21**	0.14
2237.14	Output torque, in–lb	16817	**16817**	16817	16817	**16817**	16817	16817	**16817**	16817	16817	**16817**	16817	16817	**16817**	16817
	OHL input shaft	**(A)**	**(A)**	**(A)**	**(A)**	**(A)**	**(A)**	**(A)**	**(A)**	**(A)**	**(A)**	**(A)**	**(A)**	**(A)**	**(A)**	**(A)**
	OHL output shaft **(B)**	3611	**3611**	3611	3611	**3611**	3611	3611	**3611**	3611	3611	**3611**	3611	3611	**3611**	3611
	Output RPM	1.51	**0.77**	0.51	1.51	**0.77**	0.51	1.51	**0.77**	0.51	1.51	**0.77**	0.51	1.51	**0.77**	0.51
	Input Hp (max) **(C)**	0.40	**0.20**	0.14	0.40	**0.20**	0.14	0.40	**0.20**	0.14	0.40	**0.20**	0.14	0.40	**0.20**	0.14
2286.99	Output torque, in–lb	16817	**16817**	16817	16817	**16817**	16817	16817	**16817**	16817	16817	**16817**	16817	16817	**16817**	16817
	OHL input shaft	**(A)**	**(A)**	**(A)**	**(A)**	**(A)**	**(A)**	**(A)**	**(A)**	**(A)**	**(A)**	**(A)**	**(A)**	**(A)**	**(A)**	**(A)**
	OHL output shaft **(B)**	3611	**3611**	3611	3611	**3611**	3611	3611	**3611**	3611	3611	**3611**	3611	3611	**3611**	3611
	Output RPM	1.32	**0.67**	0.45	1.32	**0.67**	0.45	1.32	**0.67**	0.45	1.32	**0.67**	0.45	1.32	**0.67**	0.45
	Input Hp (max) **(C)**	0.35	**0.18**	0.12	0.35	**0.18**	0.12	0.35	**0.18**	0.12	0.35	**0.18**	0.12	0.35	**0.18**	0.12
2616.66	Output torque, in–lb	16817	**16817**	16817	16817	**16817**	16817	16817	**16817**	16817	16817	**16817**	16817	16817	**16817**	16817
	OHL input shaft	**(A)**	**(A)**	**(A)**	**(A)**	**(A)**	**(A)**	**(A)**	**(A)**	**(A)**	**(A)**	**(A)**	**(A)**	**(A)**	**(A)**	**(A)**
	OHL output shaft **(B)**	3611	**3611**	3611	3611	**3611**	3611	3611	**3611**	3611	3611	**3611**	3611	3611	**3611**	3611
	Output RPM	1.25	**0.63**	0.42	1.25	**0.63**	0.42	1.25	**0.63**	0.42	1.25	**0.63**	0.42	–	**–**	–
	Input Hp (max) **(C)**	0.33	**0.17**	0.11	0.33	**0.17**	0.11	0.33	**0.17**	0.11	0.33	**0.17**	0.11	–	**–**	–
2757.33	Output torque, in–lb	16817	**16817**	16817	16817	**16817**	16817	16817	**16817**	16817	16817	**16817**	16817	–	**–**	–
	OHL input shaft	**(A)**	**(A)**	**(A)**	**(A)**	**(A)**	**(A)**	**(A)**	**(A)**	**(A)**	**(A)**	**(A)**	**(A)**	–	**–**	–
	OHL output shaft **(B)**	3611	**3611**	3611	3611	**3611**	3611	3611	**3611**	3611	3611	**3611**	3611	–	**–**	–
	Output RPM	1.16	**0.59**	0.39	1.16	**0.59**	0.39	1.16	**0.59**	0.39	1.16	**0.59**	0.39	–	**–**	–
	Input Hp (max) **(C)**	0.31	**0.16**	0.11	0.31	**0.16**	0.11	0.31	**0.16**	0.11	0.31	**0.16**	0.11	–	**–**	–
2971.19	Output torque, in–lb	16817	**16817**	16817	16817	**16817**	16817	16817	**16817**	16817	16817	**16817**	16817	–	**–**	–
	OHL input shaft	**(A)**	**(A)**	**(A)**	**(A)**	**(A)**	**(A)**	**(A)**	**(A)**	**(A)**	**(A)**	**(A)**	**(A)**	–	**–**	–
	OHL output shaft **(B)**	3611	**3611**	3611	3611	**3611**	3611	3611	**3611**	3611	3611	**3611**	3611	–	**–**	–
	Output RPM	1.12	**0.57**	0.38	1.12	**0.57**	0.38	1.12	**0.57**	0.38	1.12	**0.57**	0.38	1.12	**0.57**	0.38
	Input Hp (max) **(C)**	0.30	**0.15**	0.10	0.30	**0.15**	0.10	0.30	**0.15**	0.10	0.30	**0.15**	0.10	0.30	**0.15**	0.10
3080.65	Output torque, in–lb	16817	**16817**	16817	16817	**16817**	16817	16817	**16817**	16817	16817	**16817**	16817	16817	**16817**	16817
	OHL input shaft	**(A)**	**(A)**	**(A)**	**(A)**	**(A)**	**(A)**	**(A)**	**(A)**	**(A)**	**(A)**	**(A)**	**(A)**	**(A)**	**(A)**	**(A)**
	OHL output shaft **(B)**	3611	**3611**	3611	3611	**3611**	3611	3611	**3611**	3611	3611	**3611**	3611	3611	**3611**	3611
	Output RPM	1.04	**0.53**	0.35	1.04	**0.53**	0.35	1.04	**0.53**	0.35	1.04	**0.53**	0.35	1.04	**0.53**	0.35
	Input Hp (max) **(C)**	0.28	**0.14**	0.09	0.28	**0.14**	0.09	0.28	**0.14**	0.09	0.28	**0.14**	0.09	0.28	**0.14**	0.09
3330.55	Output torque, in–lb	16817	**16817**	16817	16817	**16817**	16817	16817	**16817**	16817	16817	**16817**	16817	16817	**16817**	16817
	OHL input shaft	**(A)**	**(A)**	**(A)**	**(A)**	**(A)**	**(A)**	**(A)**	**(A)**	**(A)**	**(A)**	**(A)**	**(A)**	**(A)**	**(A)**	**(A)**
	OHL output shaft **(B)**	3611	**3611**	3611	3611	**3611**	3611	3611	**3611**	3611	3611	**3611**	3611	3611	**3611**	3611
	Output RPM	1.01	**0.51**	0.34	1.01	**0.51**	0.34	1.01	**0.51**	0.34	1.01	**0.51**	0.34	1.01	**0.51**	0.34
	Input Hp (max) **(C)**	0.27	**0.14**	0.09	0.27	**0.14**	0.09	0.27	**0.14**	0.09	0.27	**0.14**	0.09	0.27	**0.14**	0.09
3416.29	Output torque, in–lb	16817	**16817**	16817	16817	**16817**	16817	16817	**16817**	16817	16817	**16817**	16817	16817	**16817**	16817
	OHL input shaft	**(A)**	**(A)**	**(A)**	**(A)**	**(A)**	**(A)**	**(A)**	**(A)**	**(A)**	**(A)**	**(A)**	**(A)**	**(A)**	**(A)**	**(A)**
	OHL output shaft **(B)**	3611	**3611**	3611	3611	**3611**	3611	3611	**3611**	3611	3611	**3611**	3611	3611	**3611**	3611
	Output RPM	0.90	**0.46**	0.31	0.90	**0.46**	0.31	0.90	**0.46**	0.31	0.90	**0.46**	0.31	0.90	**0.46**	0.31
	Input Hp (max) **(C)**	0.24	**0.12**	0.08	0.24	**0.12**	0.08	0.24	**0.12**	0.08	0.24	**0.12**	0.08	0.24	**0.12**	0.08
3825.83	Output torque, in–lb	16817	**16817**	16817	16817	**16817**	16817	16817	**16817**	16817	16817	**16817**	16817	16817	**16817**	16817
	OHL input shaft	**(A)**	**(A)**	**(A)**	**(A)**	**(A)**	**(A)**	**(A)**	**(A)**	**(A)**	**(A)**	**(A)**	**(A)**	**(A)**	**(A)**	**(A)**
	OHL output shaft **(B)**	3611	**3611**	3611	3611	**3611**	3611	3611	**3611**	3611	3611	**3611**	3611	3611	**3611**	3611
	Output RPM	0.89	**0.45**	0.30	0.89	**0.45**	0.30	0.89	**0.45**	0.30	0.89	**0.45**	0.30	–	**–**	–
	Input Hp (max) **(C)**	0.24	**0.12**	0.08	0.24	**0.12**	0.08	0.24	**0.12**	0.08	0.24	**0.12**	0.08	–	**–**	–
3857.30	Output torque, in–lb	16817	**16817**	16817	16817	**16817**	16817	16817	**16817**	16817	16817	**16817**	16817	–	**–**	–
	OHL input shaft	**(A)**	**(A)**	**(A)**	**(A)**	**(A)**	**(A)**	**(A)**	**(A)**	**(A)**	**(A)**	**(A)**	**(A)**	–	**–**	–
	OHL output shaft **(B)**	3611	**3611**	3611	3611	**3611**	3611	3611	**3611**	3611	3611	**3611**	3611	–	**–**	–
	Output RPM	0.78	**0.39**	0.26	0.78	**0.39**	0.26	0.78	**0.39**	0.26	0.78	**0.39**	0.26	–	**–**	–
	Input Hp (max) **(C)**	0.21	**0.11**	0.07	0.21	**0.11**	0.07	0.21	**0.11**	0.07	0.21	**0.11**	0.07	–	**–**	–
4435.82	Output torque, in–lb	16817	**16817**	16817	16817	**16817**	16817	16817	**16817**	16817	16817	**16817**	16817	–	**–**	–
	OHL input shaft	**(A)**	**(A)**	**(A)**	**(A)**	**(A)**	**(A)**	**(A)**	**(A)**	**(A)**	**(A)**	**(A)**	**(A)**	–	**–**	–
	OHL output shaft **(B)**	3611	**3611**	3611	3611	**3611**	3611	3611	**3611**	3611	3611	**3611**	3611	–	**–**	–

Service factor: 1.0

(A) (B) (C) - See footnotes page on inside back cover

Blank areas (-) indicate configuration not available

MSM 88

Size: MW885

Five-stage reduction – Clamp collar, three-piece coupled, separate

NEMA motor frame		56C			—			140TC			180TC			—		
IEC motor frame		71D			80D			90D			100D			112D		
Separate group		71			80			90			100			112		
Ratio	Output Rating data	3450	1750	1160	3450	1750	1160	3450	1750	1160	3450	1750	1160	3450	1750	1160
	Output RPM	0.75	**0.38**	0.25	0.75	**0.38**	0.25	0.75	**0.38**	0.25	0.75	**0.38**	0.25	0.75	**0.38**	0.25
	Input Hp (max) **(C)**	0.20	**0.10**	0.07	0.20	**0.10**	0.07	0.20	**0.10**	0.07	0.20	**0.10**	0.07	0.20	**0.10**	0.07
4602.47	Output torque, in–lb	16817	**16817**	16817	16817	**16817**	16817	16817	**16817**	16817	16817	**16817**	16817	16817	**16817**	16817
	OHL input shaft	**(A)**	**(A)**	**(A)**	**(A)**	**(A)**	**(A)**	**(A)**	**(A)**	**(A)**	**(A)**	**(A)**	**(A)**	**(A)**	**(A)**	**(A)**
	OHL output shaft **(B)**	3611	**3611**	3611	3611	**3611**	3611	3611	**3611**	3611	3611	**3611**	3611	3611	**3611**	3611
	Output RPM	0.70	**0.35**	0.24	0.70	**0.35**	0.24	0.70	**0.35**	0.24	–	**–**	–	–	**–**	–
	Input Hp (max) **(C)**	0.19	**0.09**	0.06	0.19	**0.09**	0.06	0.19	**0.09**	0.06	–	**–**	–	–	**–**	–
4932.63	Output torque, in–lb	16817	**16817**	16817	16817	**16817**	16817	16817	**16817**	16817	–	**–**	–	–	**–**	–
	OHL input shaft	**(A)**	**(A)**	**(A)**	**(A)**	**(A)**	**(A)**	**(A)**	**(A)**	**(A)**	–	**–**	–	–	**–**	–
	OHL output shaft **(B)**	3611	**3611**	3611	3611	**3611**	3611	3611	**3611**	3611	–	**–**	–	–	**–**	–
	Output RPM	0.68	**0.34**	0.23	0.68	**0.34**	0.23	0.68	**0.34**	0.23	0.68	**0.34**	0.23	0.68	**0.34**	0.23
	Input Hp (max) **(C)**	0.18	**0.09**	0.06	0.18	**0.09**	0.06	0.18	**0.09**	0.06	0.18	**0.09**	0.06	0.18	**0.09**	0.06
5103.90	Output torque, in–lb	16817	**16817**	16817	16817	**16817**	16817	16817	**16817**	16817	16817	**16817**	16817	16817	**16817**	16817
	OHL input shaft	**(A)**	**(A)**	**(A)**	**(A)**	**(A)**	**(A)**	**(A)**	**(A)**	**(A)**	**(A)**	**(A)**	**(A)**	**(A)**	**(A)**	**(A)**
	OHL output shaft **(B)**	3611	**3611**	3611	3611	**3611**	3611	3611	**3611**	3611	3611	**3611**	3611	3611	**3611**	3611
	Output RPM	0.59	**0.30**	0.20	0.59	**0.30**	0.20	0.59	**0.30**	0.20	–	**–**	–	–	**–**	–
	Input Hp (max) **(C)**	0.16	**0.08**	0.05	0.16	**0.08**	0.05	0.16	**0.08**	0.05	–	**–**	–	–	**–**	–
5844.49	Output torque, in–lb	16817	**16817**	16817	16817	**16817**	16817	16817	**16817**	16817	–	**–**	–	–	**–**	–
	OHL input shaft	(A)	(A)	(A)	**(A)**	**(A)**	**(A)**	**(A)**	**(A)**	**(A)**	–	**–**	–	–	**–**	–
	OHL output shaft **(B)**	3611	**3611**	3611	3611	**3611**	3611	3611	**3611**	3611	–	**–**	–	–	**–**	–
	Output RPM	0.53	**0.27**	0.18	0.53	**0.27**	0.18	0.53	**0.27**	0.18	0.53	**0.27**	0.18	–	**–**	–
	Input Hp (max) **(C)**	0.14	**0.07**	0.05	0.14	**0.07**	0.05	0.14	**0.07**	0.05	0.14	**0.07**	0.05	–	**–**	–
6566.41	Output torque, in–lb	16817	**16817**	16817	16817	**16817**	16817	16817	**16817**	16817	16817	**16817**	16817	–	**–**	–
	OHL input shaft	**(A)**	**(A)**	**(A)**	**(A)**	**(A)**	**(A)**	**(A)**	**(A)**	**(A)**	**(A)**	**(A)**	**(A)**	–	**–**	–
	OHL output shaft **(B)**	3611	**3611**	3611	3611	**3611**	3611	3611	**3611**	3611	3611	**3611**	3611	–	**–**	–
	Output RPM	0.49	**0.25**	0.16	0.49	**0.25**	0.16	0.49	**0.25**	0.16	0.49	**0.25**	0.16	–	**–**	–
	Input Hp (max) **(C)**	0.13	**0.07**	0.04	0.13	**0.07**	0.04	0.13	**0.07**	0.04	0.13	**0.07**	0.04	–	**–**	–
7099.64	Output torque, in–lb	16817	**16817**	16817	16817	**16817**	16817	16817	**16817**	16817	16817	**16817**	16817	–	**–**	–
	OHL input shaft	**(A)**	**(A)**	**(A)**	**(A)**	**(A)**	**(A)**	**(A)**	**(A)**	**(A)**	**(A)**	**(A)**	**(A)**	–	**–**	–
	OHL output shaft **(B)**	3611	**3611**	3611	3611	**3611**	3611	3611	**3611**	3611	3611	**3611**	3611	–	**–**	–
	Output RPM	0.46	**0.23**	0.15	0.46	**0.23**	0.15	0.46	**0.23**	0.15	0.46	**0.23**	0.15	–	**–**	–
	Input Hp (max) **(C)**	0.12	**0.06**	0.04	0.12	**0.06**	0.04	0.12	**0.06**	0.04	0.12	**0.06**	0.04	–	**–**	–
7551.23	Output torque, in–lb	16817	**16817**	16817	16817	**16817**	16817	16817	**16817**	16817	16817	**16817**	16817	–	**–**	–
	OHL input shaft	**(A)**	**(A)**	**(A)**	**(A)**	**(A)**	**(A)**	**(A)**	**(A)**	**(A)**	**(A)**	**(A)**	**(A)**	–	**–**	–
	OHL output shaft **(B)**	3611	**3611**	3611	3611	**3611**	3611	3611	**3611**	3611	3611	**3611**	3611	–	**–**	–

Service factor: 1.0

(A) (B) (C) - See footnotes page on inside back cover

Blank areas (-) indicate configuration not available

MSM 108

Size: MW1082

Double reduction - Clamp collar, three-piece coupled, separate

NEMA motor frame		140TC			180TC			—			210TC			250TC			280TC			320TC		
IEC motor frame		90D			100D			112D			132D			160D			180D/200D			—		
Separate group		90			100			112			132			160			180			—		
Ratio	Output Rating data	3450	1750	1160	3450	1750	1160	3450	1750	1160	3450	1750	1160	3450	1750	1160	3450	1750	1160	3450	1750	1160
	Output RPM	–	–	–	–	–	–	–	–	–	362	184	122	362	184	122	362	184	122	362	184	122
	Input Hp (max) (C)	–	–	–	–	–	–	–	–	–	64.54	32.74	20.52	89.63	45.47	29.26	114.72	74.16	49.83	114.72	74.16	49.83
9.52	Output torque, in–lb	–	–	–	–	–	–	–	–	–	11224	11224	10611	15588	15588	15136	19951	25426	25775	19951	25426	25775
	OHL input shaft	–	–	–	–	–	–	–	–	–	(A)	949	989	(A)	1473	1582	(A)	1710	2058	(A)	1710	2058
	OHL output shaft (B)	–	–	–	–	–	–	–	–	–	(A)	5433	5433	(A)	5433	5433	(A)	5433	5433	(A)	5433	5433
	Output RPM	–	–	–	–	–	–	–	–	–	311	158	105	311	158	105	311	158	105	311	158	105
	Input Hp (max) (C)	–	–	–	–	–	–	–	–	–	64.54	32.74	20.18	89.63	45.47	28.08	105.97	66.01	44.35	105.97	66.01	44.35
11.08	Output torque, in–lb	–	–	–	–	–	–	–	–	–	13059	13059	12142	18135	18135	16897	21442	26332	26687	21442	26332	26687
	OHL input shaft	–	–	–	–	–	–	–	–	–	(A)	948	989	(A)	1439	1579	(A)	1729	2077	(A)	1729	2077
	OHL output shaft (B)	–	–	–	–	–	–	–	–	–	(A)	5433	5433	(A)	5433	5433	(A)	5433	5433	(A)	5433	5433
	Output RPM	–	–	–	–	–	–	281	143	94	281	143	94	281	143	94	281	143	94	281	143	94
	Input Hp (max) (C)	–	–	–	–	–	–	27.34	13.87	9.19	64.54	32.74	19.88	89.63	45.47	27.17	100.24	60.87	40.9	100.24	60.87	40.90
12.28	Output torque, in–lb	–	–	–	–	–	–	6131	6131	6131	14474	14474	13260	20100	20100	18122	22478	26911	27277	22478	26911	27277
	OHL input shaft	–	–	–	–	–	–	(A)	838	872	(A)	943	987	(A)	1413	1577	(A)	1741	2089	(A)	1741	2089
	OHL output shaft (B)	–	–	–	–	–	–	(A)	5433	5433	(A)	5433	5433	(A)	5433	5433	(A)	5433	5433	(A)	5433	5433
	Output RPM	–	–	–	237	120	80	237	120	80	237	120	80	237	120	80	237	120	80	237	120	80
	Input Hp (max) (C)	–	–	–	20.42	10.36	6.87	27.34	13.87	9.19	64.54	32.74	19.25	89.63	45.47	25.49	91.02	52.98	35.59	91.02	52.98	35.59
14.59	Output torque, in–lb	–	–	–	5441	5441	5441	7285	7285	7285	17199	17199	15260	23885	23885	20201	24255	27831	28206	24255	27831	28206
	OHL input shaft	–	–	–	(A)	713	735	(A)	843	877	(A)	949	990	(A)	1360	1575	(A)	1758	2107	(A)	1758	2107
	OHL output shaft (B)	–	–	–	5433	5433	5433	5433	5433	5433	5433	5433	5433	5433	5433	5433	5433	5433	5433	5433	5433	5433
	Output RPM	–	–	–	205	104	69	205	104	69	205	104	69	205	104	69	205	104	69	205	104	69
	Input Hp (max) (C)	–	–	–	20.42	10.36	6.87	27.34	13.87	9.19	64.54	32.74	18.60	83.79	43.55	23.97	83.79	47.09	31.63	83.79	47.09	31.63
16.83	Output torque, in–lb	–	–	–	6279	6279	6279	8408	8408	8408	19850	19850	17015	25769	26405	21927	25769	28547	28929	25769	28547	28929
	OHL input shaft	–	–	–	(A)	713	742	(A)	843	877	(A)	951	990	(A)	1332	1587	(A)	1771	2120	(A)	1771	2120
	OHL output shaft (B)	–	–	–	5433	5433	5433	5433	5433	5433	5433	5433	5433	5433	5433	5433	5433	5433	5433	5433	5433	5433
	Output RPM	–	–	–	174	88	59	174	88	59	174	88	59	174	88	59	174	88	59	174	88	59
	Input Hp (max) (C)	–	–	–	20.42	10.36	6.87	27.34	13.87	9.19	64.22	31.85	17.75	76.05	40.41	22.24	76.05	41.13	27.63	76.05	41.13	27.63
19.78	Output torque, in–lb	–	–	–	7378	7378	7378	9880	9880	9880	23206	22693	19079	27480	28786	23902	27480	29303	29696	27480	29303	29696
	OHL input shaft	–	–	–	(A)	711	741	(A)	842	876	(A)	951	986	(A)	1266	1586	(A)	1783	2132	(A)	1783	2132
	OHL output shaft (B)	–	–	–	5433	5433	5433	5433	5433	5433	5433	5433	5433	5433	5433	5433	5433	5433	5433	5433	5433	5433
	Output RPM	–	–	–	163	83	55	163	83	55	163	83	55	163	83	55	163	83	55	–	–	–
	Input Hp (max) (C)	–	–	–	20.42	10.36	6.87	27.34	13.87	9.19	43.88	29.24	17.70	43.88	29.24	20.52	43.88	29.24	20.52	–	–	–
21.18	Output torque, in–lb	–	–	–	7898	7898	7898	10576	10576	10576	16974	22299	20361	16974	22299	23604	16974	22299	23604	–	–	–
	OHL input shaft	–	–	–	(A)	713	742	(A)	843	877	(A)	946	983	(A)	1478	1590	(A)	2022	2355	–	–	–
	OHL output shaft (B)	–	–	–	5433	5433	5433	5433	5433	5433	5433	5433	5433	5433	5433	5433	5433	5433	5433	–	–	–
	Output RPM	139	70	47	139	70	47	139	70	47	139	70	47	139	70	47	139	70	47	–	–	–
	Input Hp (max) (C)	9.86	5.00	3.32	20.42	10.36	6.87	27.34	13.87	9.19	39.96	26.63	16.87	39.96	26.63	18.68	39.96	26.63	18.68	–	–	–
24.89	Output torque, in–lb	4485	4485	4485	9285	9285	9285	12432	12432	12432	18172	23873	22815	18172	23873	25269	18172	23873	25269	–	–	–
	OHL input shaft	(A)	453	471	(A)	711	741	(A)	841	876	(A)	946	990	(A)	1472	1591	(A)	2016	2349	–	–	–
	OHL output shaft (B)	5433	5433	5433	5433	5433	5433	5433	5433	5433	5433	5433	5433	5433	5433	5433	5433	5433	5433	–	–	–
	Output RPM	121	61	41	121	61	41	121	61	41	121	61	41	121	61	41	121	61	41	–	–	–
	Input Hp (max) (C)	9.86	5.00	3.32	20.42	10.36	6.87	27.34	13.87	9.19	36.83	24.54	16.09	36.83	24.54	17.22	36.83	24.54	17.22	–	–	–
28.56	Output torque, in–lb	5146	5146	5146	10653	10653	10653	14264	14264	14264	19214	25243	24959	19214	25243	26716	19214	25243	26716	–	–	–
	OHL input shaft	(A)	454	473	(A)	709	738	(A)	838	873	(A)	946	988	(A)	1467	1591	(A)	2010	2343	–	–	–
	OHL output shaft (B)	5433	5433	5433	5433	5433	5433	5433	5433	5433	5433	5433	5433	5433	5433	5433	5433	5433	5433	–	–	–
	Output RPM	102	52	34	102	52	34	102	52	34	102	52	34	102	52	34	102	52	34	–	–	–
	Input Hp (max) (C)	9.86	5.00	3.32	20.42	10.36	6.87	27.34	13.87	9.19	33.30	22.19	15.20	33.30	22.19	15.57	33.30	22.19	15.57	–	–	–
33.71	Output torque, in–lb	6073	6073	6073	12573	12573	12573	16835	16835	16835	20505	26936	27839	20505	26936	28509	20505	26936	28509	–	–	–
	OHL input shaft	(A)	452	470	(A)	710	740	(A)	839	874	(A)	946	994	(A)	1459	1592	(A)	2001	2333	–	–	–
	OHL output shaft (B)	5433	5433	5433	5433	5433	5433	5433	5433	5433	5433	5433	5433	5433	5433	5433	5433	5433	5433	–	–	–
	Output RPM	94	48	32	94	48	32	94	48	32	94	48	32	94	48	32	94	48	32	–	–	–
	Input Hp (max) (C)	9.86	5.00	3.32	20.42	10.36	6.57	27.34	13.87	9.07	31.69	21.11	14.39	31.69	21.11	14.81	31.69	21.11	14.81	–	–	–
36.54	Output torque, in–lb	6583	6583	6583	13628	13628	13039	18248	18248	17998	21148	27780	28557	21148	27780	29405	21148	27780	29405	–	–	–
	OHL input shaft	(A)	456	474	(A)	708	739	(A)	757	873	(A)	956	995	(A)	1454	1592	(A)	1996	2328	–	–	–
	OHL output shaft (B)	5433	5433	5433	5433	5433	5433	5433	5433	5433	5433	5433	5433	5433	5433	5433	5433	5433	5433	–	–	–

Service factor: 1.0

(A) (B) (C) - See footnotes page on inside back cover

Blank areas (-) indicate configuration not available

MSM 108

Size: MW1082

Double reduction – Clamp collar, three-piece coupled, separate

NEMA motor frame		140TC			180TC			—			210TC			250TC			280TC			320TC		
IEC motor frame		90D			100D			112D			132D			160D			180D/200D			—		
Separate group		90			100			112			132			160			180			—		
Ratio	Output Rating data	3450	1750	1160	3450	1750	1160	3450	1750	1160	3450	1750	1160	3450	1750	1160	3450	1750	1160	3450	1750	1160
	Output RPM	85	**43**	29	85	**43**	29	85	**43**	29	85	**43**	29	85	**43**	29	–	–	–	–	–	–
	Input Hp (max) **(C)**	9.86	**5.00**	3.32	20.42	**10.36**	6.11	27.34	**13.87**	8.48	29.66	**19.76**	13.38	29.66	**19.76**	13.64	–	–	–	–	–	–
40.62	Output torque, in–lb	7319	**7319**	7319	15152	**15152**	13486	20288	**20288**	18707	22007	**28912**	29526	22007	**28912**	30093	–	–	–	–	–	–
	OHL input shaft	**(A)**	**456**	474	**(A)**	**711**	740	**(A)**	**587**	2503	**(A)**	**956**	995	**(A)**	**1449**	1593	–	–	–	–	–	–
	OHL output shaft **(B)**	5433	**5433**	5433	5433	**5433**	5433	5433	**5433**	5433	5433	**5433**	5433	5433	**5433**	5433	–	–	–	–	–	–
	Output RPM	78	**40**	26	78	**40**	26	78	**40**	26	78	**40**	26	78	**40**	26	–	–	–	–	–	–
	Input Hp (max) **(C)**	9.86	**5.00**	3.32	19.63	**10.32**	5.88	25.86	**13.87**	8.18	28.15	**18.76**	12.55	28.15	**18.76**	12.55	–	–	–	–	–	–
44.12	Output torque, in–lb	7950	**7950**	7950	15826	**16400**	14103	20847	**22038**	19607	22693	**29811**	30093	22693	**29811**	30093	–	–	–	–	–	–
	OHL input shaft	**(A)**	**455**	474	**(A)**	**709**	739	**(A)**	**440**	872	**(A)**	**956**	986	**(A)**	**1443**	1594	–	–	–	–	–	–
	OHL output shaft **(B)**	5433	**5433**	5433	5433	**5433**	5433	5433	**5433**	5433	5433	**5433**	5433	5433	**5433**	5433	–	–	–	–	–	–
	Output RPM	71	**36**	24	71	**36**	24	71	**36**	24	71	**36**	24	71	**36**	24	–	–	–	–	–	–
	Input Hp (max) **(C)**	9.86	**5.00**	3.25	18.15	**9.79**	5.58	23.80	**13.87**	7.79	26.21	**17.12**	11.35	26.21	**17.12**	11.35	–	–	–	–	–	–
48.81	Output torque, in–lb	8794	**8794**	8609	16182	**17201**	14792	21220	**24376**	20652	23366	**30093**	30093	23366	**30093**	30093	–	–	–	–	–	–
	OHL input shaft	**(A)**	**454**	473	**(A)**	**472**	738	**(A)**	**246**	871	**(A)**	**949**	989	**(A)**	**1448**	1595	–	–	–	–	–	–
	OHL output shaft **(B)**	5433	**5433**	5433	5433	**5433**	5433	5433	**5433**	5433	5433	**5433**	5433	5433	**5433**	5433	–	–	–	–	–	–
	Output RPM	66	**33**	22	66	**33**	22	66	**33**	22	66	**33**	22	66	**33**	22	–	–	–	–	–	–
	Input Hp (max) **(C)**	9.86	**5.00**	3.13	17.15	**9.37**	5.34	22.43	**13.34**	7.48	24.92	**15.95**	10.57	24.92	**15.95**	10.57	–	–	–	–	–	–
52.40	Output torque, in–lb	9441	**9441**	8903	16413	**17679**	15203	21466	**25176**	21307	23852	**30093**	30093	23852	**30093**	30093	–	–	–	–	–	–
	OHL input shaft	**(A)**	**453**	473	**(A)**	**444**	738	**(A)**	**194**	870	**(A)**	**951**	991	**(A)**	**1453**	1596	–	–	–	–	–	–
	OHL output shaft **(B)**	5433	**5433**	5433	5433	**5433**	5433	5433	**5433**	5433	5433	**5433**	5433	5433	**5433**	5433	–	–	–	–	–	–
	Output RPM	61	**31**	21	61	**31**	21	61	**31**	21	61	**31**	21	–	–	–	–	–	–	–	–	–
	Input Hp (max) **(C)**	9.86	**5.00**	2.98	16.14	**8.87**	5.06	21.05	**12.55**	7.13	23.63	**14.80**	9.81	–	–	–	–	–	–	–	–	–
56.47	Output torque, in–lb	10174	**10174**	9141	16648	**18040**	15517	21717	**25532**	21875	24377	**30093**	30093	–	–	–	–	–	–	–	–	–
	OHL input shaft	**(A)**	**454**	473	**(A)**	**428**	739	**(A)**	**187**	870	**(A)**	**952**	988	–	–	–	–	–	–	–	–	–
	OHL output shaft **(B)**	5433	**5433**	5433	5433	**5433**	5433	5433	**5433**	5433	5433	**5433**	5433	–	–	–	–	–	–	–	–	–
	Output RPM	56	**29**	19	56	**29**	19	56	**29**	19	56	**29**	19	–	–	–	–	–	–	–	–	–
	Input Hp (max) **(C)**	9.86	**5.00**	2.87	15.13	**8.45**	4.87	19.67	**11.76**	6.90	22.34	**13.67**	9.06	–	–	–	–	–	–	–	–	–
61.12	Output torque, in–lb	11012	**11012**	9545	16888	**18596**	16165	21963	**25893**	22924	24947	**30093**	30093	–	–	–	–	–	–	–	–	–
	OHL input shaft	**(A)**	**452**	473	**(A)**	**390**	738	**(A)**	**181**	867	**(A)**	**950**	990	–	–	–	–	–	–	–	–	–
	OHL output shaft **(B)**	5433	**5433**	5433	5433	**5433**	5433	5433	**5433**	5433	5433	**5433**	5433	–	–	–	–	–	–	–	–	–
	Output RPM	52	**26**	17	52	**26**	17	52	**26**	17	52	**26**	17	–	–	–	–	–	–	–	–	–
	Input Hp (max) **(C)**	9.86	**4.83**	2.76	14.10	**7.88**	4.67	18.29	**10.96**	6.67	21.05	**12.57**	8.33	–	–	–	–	–	–	–	–	–
66.48	Output torque, in–lb	11979	**11571**	9982	17123	**18863**	16880	22212	**26245**	24105	25568	**30093**	30093	–	–	–	–	–	–	–	–	–
	OHL input shaft	**(A)**	**456**	473	**(A)**	**384**	737	**(A)**	**176**	779	**(A)**	**952**	992	–	–	–	–	–	–	–	–	–
	OHL output shaft **(B)**	5433	**5433**	5433	5433	**5433**	5433	5433	**5433**	5433	5433	**5433**	5433	–	–	–	–	–	–	–	–	–
	Output RPM	47	**24**	16	47	**24**	16	47	**24**	16	47	**24**	16	–	–	–	–	–	–	–	–	–
	Input Hp (max) **(C)**	9.86	**4.63**	2.65	13.07	**7.30**	4.48	16.90	**10.16**	6.46	18.94	**11.49**	7.05	–	–	–	–	–	–	–	–	–
72.74	Output torque, in–lb	13107	**12128**	10463	17364	**19121**	17715	22464	**26614**	25522	25171	**30093**	27862	–	–	–	–	–	–	–	–	–
	OHL input shaft	**(A)**	**455**	472	**(A)**	**379**	742	**(A)**	**168**	668	**(A)**	**954**	996	–	–	–	–	–	–	–	–	–
	OHL output shaft **(B)**	5433	**5433**	5433	5433	**5433**	5433	5433	**5433**	5433	5433	**5433**	5433	–	–	–	–	–	–	–	–	–

Service factor: 1.0

(A) (B) (C) - See footnotes page on inside back cover

Blank areas (-) indicate configuration not available

MSM 108

Size: MW1083

Triple reduction – Clamp collar, three-piece coupled, separate

NEMA motor frame		—			140TC			180TC			—			210TC			250TC		
IEC motor frame		80D			90D			100D			112D			132D			160D		
Separate group		80			90			100			112			132			160		
Ratio	Output Rating data	3450	1750	1160	3450	1750	1160	3450	1750	1160	3450	1750	1160	3450	1750	1160	3450	1750	1160
	Output RPM	–	–	–	–	–	–	–	–	–	70	36	24	70	36	24	70	36	24
	Input Hp (max) (C)	–	–	–	–	–	–	–	–	–	27.34	13.87	9.19	31.24	17.04	11.29	31.24	17.04	11.29
49.04	Output torque, in–lb	–	–	–	–	–	–	–	–	–	24492	24492	24492	27983	30093	30093	27983	30093	30092
	OHL input shaft	–	–	–	–	–	–	–	–	–	(A)	838	873	(A)	952	992	(A)	1532	1595
	OHL output shaft (B)	–	–	–	–	–	–	–	–	–	5433	5433	5433	5433	5433	5433	5433	5433	5433
	Output RPM	–	–	–	–	–	–	58	29	19	58	29	19	58	29	19	58	29	19
	Input Hp (max) (C)	–	–	–	–	–	–	20.42	10.36	6.87	27.11	13.87	9.19	27.11	13.97	9.26	27.11	13.97	9.26
59.81	Output torque, in–lb	–	–	–	–	–	–	22310	22310	22310	29618	29873	29873	29618	30093	30093	29618	30093	30092
	OHL input shaft	–	–	–	–	–	–	(A)	713	742	(A)	843	868	(A)	956	995	(A)	1533	1596
	OHL output shaft (B)	–	–	–	–	–	–	5433	5433	5433	5433	5433	5433	5433	5433	5433	5433	5433	5433
	Output RPM	–	–	–	–	–	–	49	25	17	49	25	17	49	25	17	–	–	–
	Input Hp (max) (C)	–	–	–	–	–	–	20.42	10.36	6.73	23.50	11.92	7.90	23.50	11.92	7.90	–	–	–
70.08	Output torque, in–lb	–	–	–	–	–	–	26142	26142	25645	30093	30093	30093	30093	30093	30093	–	–	–
	OHL input shaft	–	–	–	–	–	–	(A)	713	742	(A)	838	873	(A)	957	996	–	–	–
	OHL output shaft (B)	–	–	–	–	–	–	5433	5433	5433	5433	5433	5433	5433	5433	5433	–	–	–
	Output RPM	42	21	14	42	21	14	42	21	14	42	21	14	42	21	14	–	–	–
	Input Hp (max) (C)	4.85	2.46	1.63	9.86	5.00	3.32	20.00	10.14	6.35	20.00	10.14	6.72	20.00	10.14	6.72	–	–	–
82.39	Output torque, in–lb	7292	7292	7292	14844	14844	14844	30093	30093	28434	30093	30093	30093	30093	30093	30093	–	–	–
	OHL input shaft	(A)	346	360	(A)	453	471	(A)	712	742	(A)	836	871	(A)	958	997	–	–	–
	OHL output shaft (B)	5433	5433	5433	5433	5433	5433	5433	5433	5433	5433	5433	5433	5433	5433	5433	–	–	–
	Output RPM	36	19	12	36	19	12	36	19	12	36	19	12	36	19	12	–	–	–
	Input Hp (max) (C)	4.85	2.46	1.63	9.86	5.00	3.32	17.43	8.84	5.86	17.43	8.84	5.86	17.43	8.84	5.86	–	–	–
94.52	Output torque, in–lb	8366	8366	8366	17031	17031	17031	30093	30093	30093	30093	30093	30093	30093	30093	30093	–	–	–
	OHL input shaft	(A)	346	360	(A)	454	473	(A)	713	742	(A)	840	874	(A)	958	998	–	–	–
	OHL output shaft (B)	5433	5433	5433	5433	5433	5433	5433	5433	5433	5433	5433	5433	5433	5433	5433	–	–	–
	Output RPM	31	16	10	31	16	10	31	16	10	31	16	10	31	16	10	–	–	–
	Input Hp (max) (C)	4.85	2.46	1.63	9.86	5.00	3.32	14.77	7.49	4.96	14.77	7.49	4.96	14.77	7.49	4.96	–	–	–
111.56	Output torque, in–lb	9874	9874	9874	20102	20102	20102	30093	30093	30093	30093	30093	30093	30093	30093	30093	–	–	–
	OHL input shaft	(A)	346	360	(A)	452	470	(A)	714	743	(A)	842	876	(A)	959	998	–	–	–
	OHL output shaft (B)	5433	5433	5433	5433	5433	5433	5433	5433	5433	5433	5433	5433	5433	5433	5433	–	–	–
	Output RPM	29	14	10	29	14	10	29	14	10	29	14	10	29	14	10	–	–	–
	Input Hp (max) (C)	4.85	2.46	1.63	9.86	5.00	3.32	13.62	6.91	4.58	13.62	6.91	4.58	13.62	6.91	4.58	–	–	–
120.93	Output torque, in–lb	10703	10703	10703	21788	21788	21788	30093	30093	30093	30093	30093	30093	30093	30093	30093	–	–	–
	OHL input shaft	(A)	346	360	(A)	456	474	(A)	714	736	(A)	843	877	(A)	959	998	–	–	–
	OHL output shaft (B)	5433	5433	5433	5433	5433	5433	5433	5433	5433	5433	5433	5433	5433	5433	5433	–	–	–
	Output RPM	26	13	9	26	13	9	26	13	9	26	13	9	26	13	9	–	–	–
	Input Hp (max) (C)	4.85	2.46	1.63	9.86	5.00	3.25	12.25	6.22	4.12	12.25	6.22	4.12	12.25	6.22	4.12	–	–	–
134.45	Output torque, in–lb	11900	11900	11900	24225	24225	23715	30093	30093	30093	30093	30093	30093	30093	30093	30093	–	–	–
	OHL input shaft	(A)	346	360	(A)	456	474	(A)	709	738	(A)	843	878	(A)	959	998	–	–	–
	OHL output shaft (B)	5433	5433	5433	5433	5433	5433	5433	5433	5433	5433	5433	5433	5433	5433	5433	–	–	–
	Output RPM	24	12	8	24	12	8	24	12	8	24	12	8	–	–	–	–	–	–
	Input Hp (max) (C)	4.85	2.46	1.63	9.86	5.00	3.13	11.28	5.72	3.79	11.28	5.72	3.79	–	–	–	–	–	–
146.04	Output torque, in–lb	12926	12926	12926	26314	26314	24816	30093	30093	30093	30093	30093	30093	–	–	–	–	–	–
	OHL input shaft	(A)	346	360	(A)	455	475	(A)	710	736	(A)	844	878	–	–	–	–	–	–
	OHL output shaft (B)	5433	5433	5433	5433	5433	5433	5433	5433	5433	5433	5433	5433	–	–	–	–	–	–
	Output RPM	21	11	7	21	11	7	21	11	7	21	11	7	–	–	–	–	–	–
	Input Hp (max) (C)	4.85	2.46	1.63	9.86	5.00	2.98	10.20	5.17	3.43	10.20	5.17	3.43	–	–	–	–	–	–
161.54	Output torque, in–lb	14298	14298	14298	29106	29106	26152	30093	30093	30093	30093	30093	30093	–	–	–	–	–	–
	OHL input shaft	(A)	346	360	(A)	454	475	(A)	709	738	(A)	844	879	–	–	–	–	–	–
	OHL output shaft (B)	5433	5433	5433	5433	5433	5433	5433	5433	5433	5433	5433	5433	–	–	–	–	–	–
	Output RPM	20	10	7	20	10	7	20	10	7	20	10	7	–	–	–	–	–	–
	Input Hp (max) (C)	4.85	2.46	1.63	9.50	4.82	2.87	9.50	4.82	3.19	9.50	4.82	3.19	–	–	–	–	–	–
173.42	Output torque, in–lb	15350	15350	15350	30093	30093	27083	30093	30093	30093	30093	30093	30093	–	–	–	–	–	–
	OHL input shaft	(A)	346	359	(A)	454	475	(A)	710	739	(A)	844	879	–	–	–	–	–	–
	OHL output shaft (B)	5433	5433	5433	5433	5433	5433	5433	5433	5433	5433	5433	5433	–	–	–	–	–	–

Service factor: 1.0

(A) (B) (C) - See footnotes page on inside back cover

Blank areas (-) indicate configuration not available

MSM 108

Size: MW1083

Triple reduction – Clamp collar, three-piece coupled, separate

NEMA motor frame		—			140TC			180TC			—			210TC			250TC		
IEC motor frame		80D			90D			100D			112D			132D			160D		
Separate group		80			90			100			112			132			160		
Ratio	Output Rating data	3450	1750	1160	3450	1750	1160	3450	1750	1160	3450	1750	1160	3450	1750	1160	3450	1750	1160
	Output RPM	18	**9**	6	18	**9**	6	18	**9**	6	18	**9**	6	–	–	–	–	–	–
	Input Hp (max) **(C)**	4.85	**2.46**	1.63	8.81	**4.47**	2.76	8.81	**4.47**	2.96	8.81	**4.47**	2.96	–	–	–	–	–	–
186.89	Output torque, in–lb	16542	**16542**	16542	30093	**30093**	28060	30093	**30093**	30093	30093	**30093**	30093	–	–	–	–	–	–
	OHL input shaft	**(A)**	**345**	359	**(A)**	**455**	474	**(A)**	**711**	740	**(A)**	**845**	879	–	–	–	–	–	–
	OHL output shaft **(B)**	5433	**5433**	5433	5433	**5433**	5433	5433	**5433**	5433	5433	**5433**	5433	–	–	–	–	–	–
	Output RPM	17	**9**	6	17	**9**	6	17	**9**	6	17	**9**	6	–	–	–	–	–	–
	Input Hp (max) **(C)**	4.85	**2.46**	1.63	8.14	**4.13**	2.65	8.14	**4.13**	2.74	8.14	**4.13**	2.74	–	–	–	–	–	–
202.29	Output torque, in–lb	17904	**17904**	17904	30093	**30093**	29094	30093	**30093**	30093	30093	**30093**	30093	–	–	–	–	–	–
	OHL input shaft	**(A)**	**345**	359	**(A)**	**455**	474	**(A)**	**712**	741	**(A)**	**845**	879	–	–	–	–	–	–
	OHL output shaft **(B)**	5433	**5433**	5433	5433	**5433**	5433	5433	**5433**	5433	5433	**5433**	5433	–	–	–	–	–	–
	Output RPM	16	**8**	5	16	**8**	5	16	**8**	5	16	**8**	5	–	–	–	–	–	–
	Input Hp (max) **(C)**	4.85	**2.46**	1.63	7.49	**3.80**	2.52	7.49	**3.80**	2.52	7.49	**3.80**	2.52	–	–	–	–	–	–
220.05	Output torque, in–lb	19476	**19476**	19476	30093	**30093**	30093	30093	**30093**	30093	30093	**30093**	30093	–	–	–	–	–	–
	OHL input shaft	**(A)**	**344**	358	**(A)**	**456**	474	**(A)**	**712**	742	**(A)**	**845**	879	–	–	–	–	–	–
	OHL output shaft **(B)**	5433	**5433**	5433	5433	**5433**	5433	5433	**5433**	5433	5433	**5433**	5433	–	–	–	–	–	–
	Output RPM	14	**7**	5	14	**7**	5	14	**7**	5	14	**7**	5	–	–	–	–	–	–
	Input Hp (max) **(C)**	4.85	**2.46**	1.56	6.84	**3.47**	2.30	6.84	**3.47**	2.30	6.84	**3.47**	2.30	–	–	–	–	–	–
240.77	Output torque, in–lb	21310	**21310**	20438	30093	**30093**	30093	30093	**30093**	30093	30093	**30093**	30093	–	–	–	–	–	–
	OHL input shaft	**(A)**	**344**	358	**(A)**	**456**	475	**(A)**	**713**	742	**(A)**	**845**	879	–	–	–	–	–	–
	OHL output shaft **(B)**	5433	**5433**	5433	5433	**5433**	5433	5433	**5433**	5433	5433	**5433**	5433	–	–	–	–	–	–

Service factor: 1.0

(A) (B) (C) - See footnotes page on inside back cover

Blank areas (-) indicate configuration not available

MSM 108

Size: MW1084

Four-stage reduction – Clamp collar, three-piece coupled, separate

NEMA motor frame		56C			—			140TC			180TC			—		
IEC motor frame		71D			80D			90D			100D			112D		
Separate group		71			80			90			100			112		
Ratio	Output Rating data	3450	1750	1160	3450	1750	1160	3450	1750	1160	3450	1750	1160	3450	1750	1160
	Output RPM	13.52	**6.86**	4.58	13.52	**6.86**	4.58	13.52	**6.86**	4.58	13.52	**6.86**	4.58	13.52	**6.86**	4.58
	Input Hp (max) **(C)**	3.98	**2.02**	1.34	4.85	**2.31**	1.63	6.45	**3.27**	2.17	6.45	**3.27**	2.17	6.45	**3.27**	2.17
255.20	Output torque, in–lb	18555	**18566**	18580	22611	**21231**	22601	30093	**30093**	30093	30093	**30093**	30093	30093	**30093**	30093
	OHL input shaft	**(A)**	**(A)**	**(A)**	**(A)**	**(A)**	**(A)**	**(A)**	**(A)**	**(A)**	**(A)**	**(A)**	**(A)**	**(A)**	**(A)**	**(A)**
	OHL output shaft **(B)**	5433	**5433**	5433	5433	**5433**	5433	5433	**5433**	5433	5433	**5433**	5433	5433	**5433**	5433
	Output RPM	12.37	**6.28**	4.20	12.37	**6.28**	4.20	12.37	**6.28**	4.20	12.37	**6.28**	4.20	12.37	**6.28**	4.20
	Input Hp (max) **(C)**	3.98	**2.02**	1.34	4.85	**2.31**	1.63	5.91	**3.00**	1.99	5.91	**3.00**	1.99	5.91	**3.00**	1.99
278.83	Output torque, in–lb	20273	**20285**	20300	24705	**23197**	24694	30093	**30093**	30093	30093	**30093**	30093	30093	**30093**	30093
	OHL input shaft	**(A)**	**(A)**	**(A)**	**(A)**	**(A)**	**(A)**	**(A)**	**(A)**	**(A)**	**(A)**	**(A)**	**(A)**	**(A)**	**(A)**	**(A)**
	OHL output shaft **(B)**	5433	**5433**	5433	5433	**5433**	5433	5433	**5433**	5433	5433	**5433**	5433	5433	**5433**	5433
	Output RPM	11.45	**5.81**	3.88	11.45	**5.81**	3.88	11.45	**5.81**	3.88	11.45	**5.81**	3.88	11.45	**5.81**	3.88
	Input Hp (max) **(C)**	3.98	**2.02**	1.34	4.85	**2.31**	1.63	5.47	**2.77**	1.84	5.47	**2.77**	1.84	5.47	**2.77**	1.84
301.21	Output torque, in–lb	21900	**21913**	21930	26687	**25059**	26676	30093	**30093**	30093	30093	**30093**	30093	30093	**30093**	30093
	OHL input shaft	**(A)**	**(A)**	**(A)**	**(A)**	**(A)**	**(A)**	**(A)**	**(A)**	**(A)**	**(A)**	**(A)**	**(A)**	**(A)**	**(A)**	**(A)**
	OHL output shaft **(B)**	5433	**5433**	5433	5433	**5433**	5433	5433	**5433**	5433	5433	**5433**	5433	5433	**5433**	5433
	Output RPM	10.82	**5.49**	3.67	10.82	**5.49**	3.67	10.82	**5.49**	3.67	10.82	**5.49**	3.67	10.82	**5.49**	3.67
	Input Hp (max) **(C)**	3.98	**2.02**	1.34	4.85	**2.31**	1.63	5.17	**2.62**	1.74	5.17	**2.62**	1.74	5.17	**2.62**	1.74
318.85	Output torque, in–lb	23183	**23196**	23214	28250	**26526**	28238	30093	**30093**	30093	30093	**30093**	30093	30093	**30093**	30093
	OHL input shaft	**(A)**	**(A)**	**(A)**	**(A)**	**(A)**	**(A)**	**(A)**	**(A)**	**(A)**	**(A)**	**(A)**	**(A)**	**(A)**	**(A)**	**(A)**
	OHL output shaft **(B)**	5433	**5433**	5433	5433	**5433**	5433	5433	**5433**	5433	5433	**5433**	5433	5433	**5433**	5433
	Output RPM	10.48	**5.32**	3.56	10.48	**5.32**	3.56	10.48	**5.32**	3.56	10.48	**5.32**	3.56	10.48	**5.32**	3.56
	Input Hp (max) **(C)**	3.98	**2.02**	1.34	4.85	**2.31**	1.63	5.01	**2.54**	1.68	5.01	**2.54**	1.68	5.01	**2.54**	1.68
329.10	Output torque, in–lb	23928	**23942**	23960	29159	**27379**	29146	30093	**30093**	30093	30093	**30093**	30093	30093	**30093**	30093
	OHL input shaft	**(A)**	**(A)**	**(A)**	**(A)**	**(A)**	**(A)**	**(A)**	**(A)**	**(A)**	**(A)**	**(A)**	**(A)**	**(A)**	**(A)**	**(A)**
	OHL output shaft **(B)**	5433	**5433**	5433	5433	**5433**	5433	5433	**5433**	5433	5433	**5433**	5433	5433	**5433**	5433
	Output RPM	9.80	**4.97**	3.32	9.80	**4.97**	3.32	9.80	**4.97**	3.32	9.80	**4.97**	3.32	9.80	**4.97**	3.32
	Input Hp (max) **(C)**	3.98	**2.02**	1.34	4.68	**2.37**	1.57	4.68	**2.37**	1.57	4.68	**2.37**	1.57	4.68	**2.37**	1.57
351.96	Output torque, in–lb	25590	**25604**	25624	30093	**30093**	30093	30093	**30093**	30093	30093	**30093**	30093	30093	**30093**	30093
	OHL input shaft	(A)	(A)	(A)	(A)	(A)	(A)	(A)	(A)	(A)	(A)	(A)	(A)	(A)	(A)	(A)
	OHL output shaft **(B)**	5433	**5433**	5433	5433	**5433**	5433	5433	**5433**	5433	5433	**5433**	5433	5433	**5433**	5433
	Output RPM	8.69	**4.41**	2.95	8.69	**4.41**	2.95	8.69	**4.41**	2.95	8.69	**4.41**	2.95	8.69	**4.41**	2.95
	Input Hp (max) **(C)**	3.98	**2.02**	1.34	4.15	**2.10**	1.39	4.15	**2.10**	1.39	4.15	**2.10**	1.39	4.15	**2.10**	1.39
397.15	Output torque, in–lb	28876	**28892**	28915	30093	**30093**	30093	30093	**30093**	30093	30093	**30093**	30093	30093	**30093**	30093
	OHL input shaft	**(A)**	**(A)**	**(A)**	**(A)**	**(A)**	**(A)**	**(A)**	**(A)**	**(A)**	**(A)**	**(A)**	**(A)**	**(A)**	**(A)**	**(A)**
	OHL output shaft **(B)**	5433	**5433**	5433	5433	**5433**	5433	5433	**5433**	5433	5433	**5433**	5433	5433	**5433**	5433
	Output RPM	7.66	**3.89**	2.60	7.66	**3.89**	2.60	7.66	**3.89**	2.60	7.66	**3.89**	2.60	7.66	**3.89**	2.60
	Input Hp (max) **(C)**	3.66	**1.86**	1.24	3.66	**1.86**	1.24	3.66	**1.86**	1.24	3.66	**1.86**	1.24	3.66	**1.86**	1.24
450.40	Output torque, in–lb	30093	**30093**	30093	30093	**30093**	30093	30093	**30093**	30093	30093	**30093**	30093	30093	**30093**	30093
	OHL input shaft	**(A)**	**(A)**	**(A)**	**(A)**	**(A)**	**(A)**	**(A)**	**(A)**	**(A)**	**(A)**	**(A)**	**(A)**	**(A)**	**(A)**	**(A)**
	OHL output shaft **(B)**	5433	**5433**	5433	5433	**5433**	5433	5433	**5433**	5433	5433	**5433**	5433	5433	**5433**	5433
	Output RPM	7.29	**3.70**	2.47	7.29	**3.70**	2.47	7.29	**3.70**	2.47	7.29	**3.70**	2.47	7.29	**3.70**	2.47
	Input Hp (max) **(C)**	3.48	**1.77**	1.18	3.48	**1.77**	1.18	3.48	**1.77**	1.18	3.48	**1.77**	1.18	3.48	**1.77**	1.18
473.17	Output torque, in–lb	30093	**30093**	30093	30093	**30093**	30093	30093	**30093**	30093	30093	**30093**	30093	30093	**30093**	30093
	OHL input shaft	**(A)**	**(A)**	**(A)**	**(A)**	**(A)**	**(A)**	**(A)**	**(A)**	**(A)**	**(A)**	**(A)**	**(A)**	**(A)**	**(A)**	**(A)**
	OHL output shaft **(B)**	5433	**5433**	5433	5433	**5433**	5433	5433	**5433**	5433	5433	**5433**	5433	5433	**5433**	5433
	Output RPM	6.69	**3.40**	2.27	6.69	**3.40**	2.27	6.69	**3.40**	2.27	6.69	**3.40**	2.27	6.69	**3.40**	2.27
	Input Hp (max) **(C)**	3.20	**1.62**	1.08	3.20	**1.62**	1.08	3.20	**1.62**	1.08	3.20	**1.62**	1.08	3.20	**1.62**	1.08
515.41	Output torque, in–lb	30093	**30093**	30093	30093	**30093**	30093	30093	**30093**	30093	30093	**30093**	30093	30093	**30093**	30093
	OHL input shaft	**(A)**	**(A)**	**(A)**	**(A)**	**(A)**	**(A)**	**(A)**	**(A)**	**(A)**	**(A)**	**(A)**	**(A)**	**(A)**	**(A)**	**(A)**
	OHL output shaft **(B)**	5433	**5433**	5433	5433	**5433**	5433	5433	**5433**	5433	5433	**5433**	5433	5433	**5433**	5433
	Output RPM	6.32	**3.20**	2.14	6.32	**3.20**	2.14	6.32	**3.20**	2.14	6.32	**3.20**	2.14	6.32	**3.20**	2.14
	Input Hp (max) **(C)**	3.02	**1.53**	1.02	3.02	**1.53**	1.02	3.02	**1.53**	1.02	3.02	**1.53**	1.02	3.02	**1.53**	1.02
546.18	Output torque, in–lb	30093	**30093**	30093	30093	**30093**	30093	30093	**30093**	30093	30093	**30093**	30093	30093	**30093**	30093
	OHL input shaft	**(A)**	**(A)**	**(A)**	**(A)**	**(A)**	**(A)**	**(A)**	**(A)**	**(A)**	**(A)**	**(A)**	**(A)**	**(A)**	**(A)**	**(A)**
	OHL output shaft **(B)**	5433	**5433**	5433	5433	**5433**	5433	5433	**5433**	5433	5433	**5433**	5433	5433	**5433**	5433
	Output RPM	5.78	**2.93**	1.96	5.78	**2.93**	1.96	5.78	**2.93**	1.96	5.78	**2.93**	1.96	5.78	**2.93**	1.96
	Input Hp (max) **(C)**	2.76	**1.40**	0.94	2.76	**1.40**	0.94	2.76	**1.40**	0.94	2.76	**1.40**	0.94	2.76	**1.40**	0.94
596.76	Output torque, in–lb	30093	**30093**	30093	30093	**30093**	30093	30093	**30093**	30093	30093	**30093**	30093	30093	**30093**	30093
	OHL input shaft	(A)	(A)	(A)	(A)	(A)	(A)	(A)	(A)	(A)	(A)	(A)	(A)	(A)	(A)	(A)
	OHL output shaft **(B)**	5433	**5433**	5433	5433	**5433**	5433	5433	**5433**	5433	5433	**5433**	5433	5433	**5433**	5433

MSM 108

Size: MW1084

Four-stage reduction – Clamp collar, three-piece coupled, separate

NEMA motor frame		56C			—			140TC			180TC			—		
IEC motor frame		71D			80D			90D			100D			112D		
Separate group		71			80			90			100			112		
Ratio	Output Rating data	3450	1750	1160	3450	1750	1160	3450	1750	1160	3450	1750	1160	3450	1750	1160
	Output RPM	5.31	**2.70**	1.80	5.31	**2.70**	1.80	5.31	**2.70**	1.80	5.31	**2.70**	1.80	5.31	**2.70**	1.80
	Input Hp (max) **(C)**	2.54	**1.29**	0.86	2.54	**1.29**	0.86	2.54	**1.29**	0.86	2.54	**1.29**	0.86	2.54	**1.29**	0.86
649.15	Output torque, in–lb	30093	**30093**	30093	30093	**30093**	30093	30093	**30093**	30093	30093	**30093**	30093	30093	**30093**	30093
	OHL input shaft	**(A)**	**(A)**	**(A)**	**(A)**	**(A)**	**(A)**	**(A)**	**(A)**	**(A)**	**(A)**	**(A)**	**(A)**	**(A)**	**(A)**	**(A)**
	OHL output shaft **(B)**	5433	**5433**	5433	5433	**5433**	5433	5433	**5433**	5433	5433	**5433**	5433	5433	**5433**	5433
	Output RPM	5.19	**2.63**	1.76	5.19	**2.63**	1.76	5.19	**2.63**	1.76	5.19	**2.63**	1.76	5.19	**2.63**	1.76
	Input Hp (max) **(C)**	2.48	**1.26**	0.84	2.48	**1.26**	0.84	2.48	**1.26**	0.84	2.48	**1.26**	0.84	2.48	**1.26**	0.84
665.33	Output torque, in–lb	30093	**30093**	30093	30093	**30093**	30093	30093	**30093**	30093	30093	**30093**	30093	30093	**30093**	30093
	OHL input shaft	**(A)**	**(A)**	**(A)**	**(A)**	**(A)**	**(A)**	**(A)**	**(A)**	**(A)**	**(A)**	**(A)**	**(A)**	**(A)**	**(A)**	**(A)**
	OHL output shaft **(B)**	5433	**5433**	5433	5433	**5433**	5433	5433	**5433**	5433	5433	**5433**	5433	5433	**5433**	5433
	Output RPM	4.89	**2.48**	1.66	4.89	**2.48**	1.66	4.89	**2.48**	1.66	4.89	**2.48**	1.66	4.89	**2.48**	1.66
	Input Hp (max) **(C)**	2.33	**1.18**	0.79	2.33	**1.18**	0.79	2.33	**1.18**	0.79	2.33	**1.18**	0.79	2.33	**1.18**	0.79
706.17	Output torque, in–lb	30093	**30093**	30093	30093	**30093**	30093	30093	**30093**	30093	30093	**30093**	30093	30093	**30093**	30093
	OHL input shaft	(A)	(A)	(A)	**(A)**	**(A)**	**(A)**	**(A)**	**(A)**	**(A)**	**(A)**	**(A)**	**(A)**	**(A)**	**(A)**	**(A)**
	OHL output shaft **(B)**	5433	**5433**	5433	5433	**5433**	5433	5433	**5433**	5433	5433	**5433**	5433	5433	**5433**	5433
	Output RPM	4.62	**2.34**	1.57	4.62	**2.34**	1.57	4.62	**2.34**	1.57	4.62	**2.34**	1.57	4.62	**2.34**	1.57
	Input Hp (max) **(C)**	2.21	**1.12**	0.75	2.21	**1.12**	0.75	2.21	**1.12**	0.75	2.21	**1.12**	0.75	2.21	**1.12**	0.75
746.31	Output torque, in–lb	30093	**30093**	30093	30093	**30093**	30093	30093	**30093**	30093	30093	**30093**	30093	30093	**30093**	30093
	OHL input shaft	**(A)**	**(A)**	**(A)**	**(A)**	**(A)**	**(A)**	**(A)**	**(A)**	**(A)**	**(A)**	**(A)**	**(A)**	**(A)**	**(A)**	**(A)**
	OHL output shaft **(B)**	5433	**5433**	5433	5433	**5433**	5433	5433	**5433**	5433	5433	**5433**	5433	5433	**5433**	5433
	Output RPM	4.42	**2.24**	1.50	4.42	**2.24**	1.50	4.42	**2.24**	1.50	4.42	**2.24**	1.50	4.42	**2.24**	1.50
	Input Hp (max) **(C)**	2.11	**1.07**	0.72	2.11	**1.07**	0.72	2.11	**1.07**	0.72	2.11	**1.07**	0.72	2.11	**1.07**	0.72
780.09	Output torque, in–lb	30093	**30093**	30093	30093	**30093**	30093	30093	**30093**	30093	30093	**30093**	30093	30093	**30093**	30093
	OHL input shaft	**(A)**	**(A)**	**(A)**	**(A)**	**(A)**	**(A)**	**(A)**	**(A)**	**(A)**	**(A)**	**(A)**	**(A)**	**(A)**	**(A)**	**(A)**
	OHL output shaft **(B)**	5433	**5433**	5433	5433	**5433**	5433	5433	**5433**	5433	5433	**5433**	5433	5433	**5433**	5433
	Output RPM	4.20	**2.13**	1.43	4.20	**2.13**	1.43	4.20	**2.13**	1.43	4.20	**2.13**	1.43	4.20	**2.13**	1.43
	Input Hp (max) **(C)**	2.01	**1.02**	0.68	2.01	**1.02**	0.68	2.01	**1.02**	0.68	2.01	**1.02**	0.68	2.01	**1.02**	0.68
820.62	Output torque, in–lb	30093	**30093**	30093	30093	**30093**	30093	30093	**30093**	30093	30093	**30093**	30093	30093	**30093**	30093
	OHL input shaft	**(A)**	**(A)**	**(A)**	**(A)**	**(A)**	**(A)**	**(A)**	**(A)**	**(A)**	**(A)**	**(A)**	**(A)**	**(A)**	**(A)**	**(A)**
	OHL output shaft **(B)**	5433	**5433**	5433	5433	**5433**	5433	5433	**5433**	5433	5433	**5433**	5433	5433	**5433**	5433
	Output RPM	3.92	**1.99**	1.33	3.92	**1.99**	1.33	3.92	**1.99**	1.33	3.92	**1.99**	1.33	3.92	**1.99**	1.33
	Input Hp (max) **(C)**	1.87	**0.95**	0.63	1.87	**0.95**	0.63	1.87	**0.95**	0.63	1.87	**0.95**	0.63	1.87	**0.95**	0.63
880.97	Output torque, in–lb	30093	**30093**	30093	30093	**30093**	30093	30093	**30093**	30093	30093	**30093**	30093	30093	**30093**	30093
	OHL input shaft	**(A)**	**(A)**	**(A)**	**(A)**	**(A)**	**(A)**	**(A)**	**(A)**	**(A)**	**(A)**	**(A)**	**(A)**	**(A)**	**(A)**	**(A)**
	OHL output shaft **(B)**	5433	**5433**	5433	5433	**5433**	5433	5433	**5433**	5433	5433	**5433**	5433	5433	**5433**	5433
	Output RPM	3.63	**1.84**	1.23	3.63	**1.84**	1.23	3.63	**1.84**	1.23	3.63	**1.84**	1.23	3.63	**1.84**	1.23
	Input Hp (max) **(C)**	1.74	**0.88**	0.59	1.74	**0.88**	0.59	1.74	**0.88**	0.59	1.74	**0.88**	0.59	1.74	**0.88**	0.59
949.40	Output torque, in–lb	30093	**30093**	30093	30093	**30093**	30093	30093	**30093**	30093	30093	**30093**	30093	30093	**30093**	30093
	OHL input shaft	**(A)**	**(A)**	**(A)**	**(A)**	**(A)**	**(A)**	**(A)**	**(A)**	**(A)**	**(A)**	**(A)**	**(A)**	**(A)**	**(A)**	**(A)**
	OHL output shaft **(B)**	5433	**5433**	5433	5433	**5433**	5433	5433	**5433**	5433	5433	**5433**	5433	5433	**5433**	5433
	Output RPM	3.40	**1.73**	1.15	3.40	**1.73**	1.15	3.40	**1.73**	1.15	3.40	**1.73**	1.15	3.40	**1.73**	1.15
	Input Hp (max) **(C)**	1.63	**0.82**	0.55	1.63	**0.82**	0.55	1.63	**0.82**	0.55	1.63	**0.82**	0.55	1.63	**0.82**	0.55
1013.64	Output torque, in–lb	30093	**30093**	30093	30093	**30093**	30093	30093	**30093**	30093	30093	**30093**	30093	30093	**30093**	30093
	OHL input shaft	(A)	(A)	(A)	**(A)**	**(A)**	**(A)**	**(A)**	**(A)**	**(A)**	**(A)**	**(A)**	**(A)**	**(A)**	**(A)**	**(A)**
	OHL output shaft **(B)**	5433	**5433**	5433	5433	**5433**	5433	5433	**5433**	5433	5433	**5433**	5433	5433	**5433**	5433
	Output RPM	3.14	**1.59**	1.06	3.14	**1.59**	1.06	3.14	**1.59**	1.06	–	**–**	–	–	**–**	–
	Input Hp (max) **(C)**	1.50	**0.76**	0.51	1.50	**0.76**	0.51	1.50	**0.76**	0.51	–	**–**	–	–	**–**	–
1099.25	Output torque, in–lb	30093	**30093**	30093	30093	**30093**	30093	30093	**30093**	30093	–	**–**	–	–	**–**	–
	OHL input shaft	**(A)**	**(A)**	**(A)**	**(A)**	**(A)**	**(A)**	**(A)**	**(A)**	**(A)**	–	**–**	–	–	**–**	–
	OHL output shaft **(B)**	5433	**5433**	5433	5433	**5433**	5433	5433	**5433**	5433	–	**–**	–	–	**–**	–
	Output RPM	2.92	**1.48**	0.99	2.92	**1.48**	0.99	2.92	**1.48**	0.99	2.92	**1.48**	0.99	2.92	**1.48**	0.99
	Input Hp (max) **(C)**	1.39	**0.71**	0.47	1.39	**0.71**	0.47	1.39	**0.71**	0.47	1.39	**0.71**	0.47	1.39	**0.71**	0.47
1183.01	Output torque, in–lb	30093	**30093**	30093	30093	**30093**	30093	30093	**30093**	30093	30093	**30093**	30093	30093	**30093**	30093
	OHL input shaft	**(A)**	**(A)**	**(A)**	**(A)**	**(A)**	**(A)**	**(A)**	**(A)**	**(A)**	**(A)**	**(A)**	**(A)**	**(A)**	**(A)**	**(A)**
	OHL output shaft **(B)**	5433	**5433**	5433	5433	**5433**	5433	5433	**5433**	5433	5433	**5433**	5433	5433	**5433**	5433

Service factor: 1.0

(A) (B) (C) - See footnotes page on inside back cover

Blank areas (-) indicate configuration not available

MSM 108

Size: MW1084

Four-stage reduction – Clamp collar, three-piece coupled, separate

NEMA motor frame		56C			—			140TC			180TC			—		
IEC motor frame		71D			80D			90D			100D			112D		
Separate group		71			80			90			100			112		
Ratio	Output Rating data	3450	1750	1160	3450	1750	1160	3450	1750	1160	3450	1750	1160	3450	1750	1160
	Output RPM	2.74	**1.39**	0.93	2.74	**1.39**	0.93	–	–	–	–	–	–	–	–	–
	Input Hp (max) **(C)**	1.31	**0.66**	0.44	1.31	**0.66**	0.44	–	–	–	–	–	–	–	–	–
1260.63	Output torque, in–lb	30093	**30093**	30093	30093	**30093**	30093	–	–	–	–	–	–	–	–	–
	OHL input shaft	**(A)**	**(A)**	**(A)**	**(A)**	**(A)**	**(A)**	–	–	–	–	–	–	–	–	–
	OHL output shaft **(B)**	5433	**5433**	5433	5433	**5433**	5433	–	–	–	–	–	–	–	–	–
	Output RPM	2.61	**1.33**	0.89	2.61	**1.33**	0.89	2.61	**1.33**	0.89	–	–	–	–	–	–
	Input Hp (max) **(C)**	1.25	**0.63**	0.42	1.25	**0.63**	0.42	1.25	**0.63**	0.42	–	–	–	–	–	–
1319.78	Output torque, in–lb	30093	**30093**	30093	30093	**30093**	30093	30093	**30093**	30093	–	–	–	–	–	–
	OHL input shaft	**(A)**	**(A)**	**(A)**	**(A)**	**(A)**	**(A)**	**(A)**	**(A)**	**(A)**	–	–	–	–	–	–
	OHL output shaft **(B)**	5433	**5433**	5433	5433	**5433**	5433	5433	**5433**	5433	–	–	–	–	–	–
	Output RPM	2.44	**1.24**	0.83	2.44	**1.24**	0.83	2.44	**1.24**	0.83	2.44	**1.24**	0.83	–	–	–
	Input Hp (max) **(C)**	1.16	**0.59**	0.39	1.16	**0.59**	0.39	1.16	**0.59**	0.39	1.16	**0.59**	0.39	–	–	–
1416.03	Output torque, in–lb	30093	**30093**	30093	30093	**30093**	30093	30093	**30093**	30093	30093	**30093**	30093	–	–	–
	OHL input shaft	**(A)**	**(A)**	**(A)**	**(A)**	**(A)**	**(A)**	**(A)**	**(A)**	**(A)**	**(A)**	**(A)**	**(A)**	–	–	–
	OHL output shaft **(B)**	5433	**5433**	5433	5433	**5433**	5433	5433	**5433**	5433	5433	**5433**	5433	–	–	–
	Output RPM	2.35	**1.19**	0.80	2.35	**1.19**	0.80	2.35	**1.19**	0.80	–	–	–	–	–	–
	Input Hp (max) **(C)**	1.12	**0.57**	0.38	1.12	**0.57**	0.38	1.12	**0.57**	0.38	–	–	–	–	–	–
1468.40	Output torque, in–lb	30093	**30093**	30093	30093	**30093**	30093	30093	**30093**	30093	–	–	–	–	–	–
	OHL input shaft	(A)	(A)	(A)	(A)	(A)	**(A)**	**(A)**	**(A)**	**(A)**	–	–	–	–	–	–
	OHL output shaft **(B)**	5433	**5433**	5433	5433	**5433**	5433	5433	**5433**	5433	–	–	–	–	–	–
	Output RPM	2.09	**1.06**	0.71	2.09	**1.06**	0.71	2.09	**1.06**	0.71	–	–	–	–	–	–
	Input Hp (max) **(C)**	1.00	**0.51**	0.34	1.00	**0.51**	0.34	1.00	**0.51**	0.34	–	–	–	–	–	–
1652.71	Output torque, in–lb	30093	**30093**	30093	30093	**30093**	30093	30093	**30093**	30093	–	–	–	–	–	–
	OHL input shaft	**(A)**	**(A)**	**(A)**	**(A)**	**(A)**	**(A)**	**(A)**	**(A)**	**(A)**	–	–	–	–	–	–
	OHL output shaft **(B)**	5433	**5433**	5433	5433	**5433**	5433	5433	**5433**	5433	–	–	–	–	–	–
	Output RPM	1.99	**1.01**	0.67	1.99	**1.01**	0.67	1.99	**1.01**	0.67	–	–	–	–	–	–
	Input Hp (max) **(C)**	0.95	**0.48**	0.32	0.95	**0.48**	0.32	0.95	**0.48**	0.32	–	–	–	–	–	–
1734.20	Output torque, in–lb	30093	**30093**	30093	30093	**30093**	30093	30093	**30093**	30093	–	–	–	–	–	–
	OHL input shaft	**(A)**	**(A)**	**(A)**	**(A)**	**(A)**	**(A)**	**(A)**	**(A)**	**(A)**	–	–	–	–	–	–
	OHL output shaft **(B)**	5433	**5433**	5433	5433	**5433**	5433	5433	**5433**	5433	–	–	–	–	–	–
	Output RPM	1.85	**0.94**	0.63	1.85	**0.94**	0.63	1.85	**0.94**	0.63	–	–	–	–	–	–
	Input Hp (max) **(C)**	0.88	**0.45**	0.30	0.88	**0.45**	0.30	0.88	**0.45**	0.30	–	–	–	–	–	–
1868.90	Output torque, in–lb	30093	**30093**	30093	30093	**30093**	30093	30093	**30093**	30093	–	–	–	–	–	–
	OHL input shaft	**(A)**	**(A)**	**(A)**	**(A)**	**(A)**	**(A)**	**(A)**	**(A)**	**(A)**	–	–	–	–	–	–
	OHL output shaft **(B)**	5433	**5433**	5433	5433	**5433**	5433	5433	**5433**	5433	–	–	–	–	–	–
	Output RPM	1.76	**0.89**	0.60	1.76	**0.89**	0.60	–	–	–	–	–	–	–	–	–
	Input Hp (max) **(C)**	0.84	**0.43**	0.29	0.84	**0.43**	0.29	–	–	–	–	–	–	–	–	–
1959.65	Output torque, in–lb	30093	**30093**	30093	30093	**30093**	30093	–	–	–	–	–	–	–	–	–
	OHL input shaft	**(A)**	**(A)**	**(A)**	**(A)**	**(A)**	**(A)**	–	–	–	–	–	–	–	–	–
	OHL output shaft **(B)**	5433	**5433**	5433	5433	**5433**	5433	–	–	–	–	–	–	–	–	–
	Output RPM	1.63	**0.83**	0.55	1.63	**0.83**	0.55	–	–	–	–	–	–	–	–	–
	Input Hp (max) **(C)**	0.78	**0.40**	0.26	0.78	**0.40**	0.26	–	–	–	–	–	–	–	–	–
2111.86	Output torque, in–lb	30093	**30093**	30093	30093	**30093**	30093	–	–	–	–	–	–	–	–	–
	OHL input shaft	**(A)**	**(A)**	**(A)**	**(A)**	**(A)**	**(A)**	–	–	–	–	–	–	–	–	–
	OHL output shaft **(B)**	5433	**5433**	5433	5433	**5433**	5433	–	–	–	–	–	–	–	–	–
	Output RPM	1.58	**0.80**	0.53	1.58	**0.80**	0.53	1.58	**0.80**	0.53	–	–	–	–	–	–
	Input Hp (max) **(C)**	0.75	**0.38**	0.26	0.75	**0.38**	0.26	0.75	**0.38**	0.26	–	–	–	–	–	–
2188.60	Output torque, in–lb	30093	**30093**	30093	30093	**30093**	30093	30093	**30093**	30093	–	–	–	–	–	–
	OHL input shaft	**(A)**	**(A)**	**(A)**	**(A)**	**(A)**	**(A)**	**(A)**	**(A)**	**(A)**	–	–	–	–	–	–
	OHL output shaft **(B)**	5433	**5433**	5433	5433	**5433**	5433	5433	**5433**	5433	–	–	–	–	–	–
	Output RPM	1.39	**0.70**	0.47	1.39	**0.70**	0.47	–	–	–	–	–	–	–	–	–
	Input Hp (max) **(C)**	0.66	**0.34**	0.22	0.66	**0.34**	0.22	–	–	–	–	–	–	–	–	–
2486.57	Output torque, in–lb	30093	**30093**	30093	30093	**30093**	30093	–	–	–	–	–	–	–	–	–
	OHL input shaft	**(A)**	**(A)**	**(A)**	**(A)**	**(A)**	**(A)**	–	–	–	–	–	–	–	–	–
	OHL output shaft **(B)**	5433	**5433**	5433	5433	**5433**	5433	–	–	–	–	–	–	–	–	–

Service factor: 1.0

(A) (B) (C) - See footnotes page on inside back cover

Blank areas (-) indicate configuration not available

MSM 108

Size: MW1085

Five-stage reduction – Clamp collar, three-piece coupled, separate

NEMA motor frame		56C			—			140TC			180TC			—		
IEC motor frame		71D			80D			90D			100D			112D		
Separate group		71			80			90			100			112		
Ratio	Output Rating data	3450	1750	1160	3450	1750	1160	3450	1750	1160	3450	1750	1160	3450	1750	1160
	Output RPM	1.34	**0.68**	0.45	1.34	**0.68**	0.45	1.34	**0.68**	0.45	1.34	**0.68**	0.45	–	–	–
	Input Hp (max) **(C)**	0.64	**0.32**	0.22	0.64	**0.32**	0.22	0.64	**0.32**	0.22	0.64	**0.32**	0.22	–	–	–
2573.69	Output torque, in–lb	30093	**30093**	30093	30093	**30093**	30093	30093	**30093**	30093	30093	**30093**	30093	–	–	–
	OHL input shaft	**(A)**	**(A)**	**(A)**	**(A)**	**(A)**	**(A)**	**(A)**	**(A)**	**(A)**	**(A)**	**(A)**	**(A)**	–	–	–
	OHL output shaft **(B)**	5433	**5433**	5433	5433	**5433**	5433	5433	**5433**	5433	5433	**5433**	5433	–	–	–
	Output RPM	1.23	**0.62**	0.42	1.23	**0.62**	0.42	1.23	**0.62**	0.42	1.23	**0.62**	0.42	1.23	**0.62**	0.42
	Input Hp (max) **(C)**	0.59	**0.30**	0.20	0.59	**0.30**	0.20	0.59	**0.30**	0.20	0.59	**0.30**	0.20	0.59	**0.30**	0.20
2804.20	Output torque, in–lb	30093	**30093**	30093	30093	**30093**	30093	30093	**30093**	30093	30093	**30093**	30093	30093	**30093**	30093
	OHL input shaft	**(A)**	**(A)**	**(A)**	**(A)**	**(A)**	**(A)**	**(A)**	**(A)**	**(A)**	**(A)**	**(A)**	**(A)**	**(A)**	**(A)**	**(A)**
	OHL output shaft **(B)**	5433	**5433**	5433	5433	**5433**	5433	5433	**5433**	5433	5433	**5433**	5433	5433	**5433**	5433
	Output RPM	1.17	**0.59**	0.40	1.17	**0.59**	0.40	1.17	**0.59**	0.40	1.17	**0.59**	0.40	1.17	**0.59**	0.40
	Input Hp (max) **(C)**	0.56	**0.28**	0.19	0.56	**0.28**	0.19	0.56	**0.28**	0.19	0.56	**0.28**	0.19	0.56	**0.28**	0.19
2944.27	Output torque, in–lb	30093	**30093**	30093	30093	**30093**	30093	30093	**30093**	30093	30093	**30093**	30093	30093	**30093**	30093
	OHL input shaft	**(A)**	**(A)**	**(A)**	**(A)**	**(A)**	**(A)**	**(A)**	**(A)**	**(A)**	**(A)**	**(A)**	**(A)**	**(A)**	**(A)**	**(A)**
	OHL output shaft **(B)**	5433	**5433**	5433	5433	**5433**	5433	5433	**5433**	5433	5433	**5433**	5433	5433	**5433**	5433
	Output RPM	1.11	**0.56**	0.38	1.11	**0.56**	0.38	1.11	**0.56**	0.38	1.11	**0.56**	0.38	–	–	–
	Input Hp (max) **(C)**	0.53	**0.27**	0.18	0.53	**0.27**	0.18	0.53	**0.27**	0.18	0.53	**0.27**	0.18	–	–	–
3101.76	Output torque, in–lb	30093	**30093**	30093	30093	**30093**	30093	30093	**30093**	30093	30093	**30093**	30093	–	–	–
	OHL input shaft	**(A)**	**(A)**	**(A)**	**(A)**	**(A)**	**(A)**	**(A)**	**(A)**	**(A)**	**(A)**	**(A)**	**(A)**	–	–	–
	OHL output shaft **(B)**	5433	**5433**	5433	5433	**5433**	5433	5433	**5433**	5433	5433	**5433**	5433	–	–	–
	Output RPM	1.07	**0.54**	0.36	1.07	**0.54**	0.36	1.07	**0.54**	0.36	1.07	**0.54**	0.36	1.07	**0.54**	0.36
	Input Hp (max) **(C)**	0.51	**0.26**	0.17	0.51	**0.26**	0.17	0.51	**0.26**	0.17	0.51	**0.26**	0.17	0.51	**0.26**	0.17
3230.33	Output torque, in–lb	30093	**30093**	30093	30093	**30093**	30093	30093	**30093**	30093	30093	**30093**	30093	30093	**30093**	30093
	OHL input shaft	**(A)**	**(A)**	**(A)**	**(A)**	**(A)**	**(A)**	**(A)**	**(A)**	**(A)**	**(A)**	**(A)**	**(A)**	**(A)**	**(A)**	**(A)**
	OHL output shaft **(B)**	5433	**5433**	5433	5433	**5433**	5433	5433	**5433**	5433	5433	**5433**	5433	5433	**5433**	5433
	Output RPM	0.98	**0.50**	0.33	0.98	**0.50**	0.33	0.98	**0.50**	0.33	0.98	**0.50**	0.33	–	–	–
	Input Hp (max) **(C)**	0.47	**0.24**	0.16	0.47	**0.24**	0.16	0.47	**0.24**	0.16	0.47	**0.24**	0.16	–	–	–
3502.91	Output torque, in–lb	30093	**30093**	30093	30093	**30093**	30093	30093	**30093**	30093	30093	**30093**	30093	–	–	–
	OHL input shaft	**(A)**	**(A)**	**(A)**	**(A)**	**(A)**	**(A)**	**(A)**	**(A)**	**(A)**	**(A)**	**(A)**	**(A)**	–	–	–
	OHL output shaft **(B)**	5433	**5433**	5433	5433	**5433**	5433	5433	**5433**	5433	5433	**5433**	5433	–	–	–
	Output RPM	0.93	**0.47**	0.31	0.93	**0.47**	0.31	0.93	**0.47**	0.31	0.93	**0.47**	0.31	–	–	–
	Input Hp (max) **(C)**	0.44	**0.22**	0.15	0.44	**0.22**	0.15	0.44	**0.22**	0.15	0.44	**0.22**	0.15	–	–	–
3726.73	Output torque, in–lb	30093	**30093**	30093	30093	**30093**	30093	30093	**30093**	30093	30093	**30093**	30093	–	–	–
	OHL input shaft	**(A)**	**(A)**	**(A)**	**(A)**	**(A)**	**(A)**	**(A)**	**(A)**	**(A)**	**(A)**	**(A)**	**(A)**	–	–	–
	OHL output shaft **(B)**	5433	**5433**	5433	5433	**5433**	5433	5433	**5433**	5433	5433	**5433**	5433	–	–	–
	Output RPM	0.88	**0.45**	0.30	0.88	**0.45**	0.30	0.88	**0.45**	0.30	0.88	**0.45**	0.30	0.88	**0.45**	0.30
	Input Hp (max) **(C)**	0.42	**0.21**	0.14	0.42	**0.21**	0.14	0.42	**0.21**	0.14	0.42	**0.21**	0.14	0.42	**0.21**	0.14
3915.35	Output torque, in–lb	30093	**30093**	30093	30093	**30093**	30093	30093	**30093**	30093	30093	**30093**	30093	30093	**30093**	30093
	OHL input shaft	**(A)**	**(A)**	**(A)**	**(A)**	**(A)**	**(A)**	**(A)**	**(A)**	**(A)**	**(A)**	**(A)**	**(A)**	**(A)**	**(A)**	**(A)**
	OHL output shaft **(B)**	5433	**5433**	5433	5433	**5433**	5433	5433	**5433**	5433	5433	**5433**	5433	5433	**5433**	5433
	Output RPM	0.81	**0.41**	0.28	0.81	**0.41**	0.28	0.81	**0.41**	0.28	0.81	**0.41**	0.28	0.81	**0.41**	0.28
	Input Hp (max) **(C)**	0.39	**0.20**	0.13	0.39	**0.20**	0.13	0.39	**0.20**	0.13	0.39	**0.20**	0.13	0.39	**0.20**	0.13
4237.98	Output torque, in–lb	30093	**30093**	30093	30093	**30093**	30093	30093	**30093**	30093	30093	**30093**	30093	30093	**30093**	30093
	OHL input shaft	**(A)**	**(A)**	**(A)**	**(A)**	**(A)**	**(A)**	**(A)**	**(A)**	**(A)**	**(A)**	**(A)**	**(A)**	**(A)**	**(A)**	**(A)**
	OHL output shaft **(B)**	5433	**5433**	5433	5433	**5433**	5433	5433	**5433**	5433	5433	**5433**	5433	5433	**5433**	5433
	Output RPM	0.75	**0.38**	0.25	0.75	**0.38**	0.25	0.75	**0.38**	0.25	0.75	**0.38**	0.25	–	–	–
	Input Hp (max) **(C)**	0.36	**0.18**	0.12	0.36	**0.18**	0.12	0.36	**0.18**	0.12	0.36	**0.18**	0.12	–	–	–
4600.83	Output torque, in–lb	30093	**30093**	30093	30093	**30093**	30093	30093	**30093**	30093	30093	**30093**	30093	–	–	–
	OHL input shaft	**(A)**	**(A)**	**(A)**	**(A)**	**(A)**	**(A)**	**(A)**	**(A)**	**(A)**	**(A)**	**(A)**	**(A)**	–	–	–
	OHL output shaft **(B)**	5433	**5433**	5433	5433	**5433**	5433	5433	**5433**	5433	5433	**5433**	5433	–	–	–
	Output RPM	0.70	**0.35**	0.24	0.70	**0.35**	0.24	0.70	**0.35**	0.24	0.70	**0.35**	0.24	–	–	–
	Input Hp (max) **(C)**	0.33	**0.17**	0.11	0.33	**0.17**	0.11	0.33	**0.17**	0.11	0.33	**0.17**	0.11	–	–	–
4958.19	Output torque, in–lb	30093	**30093**	30093	30093	**30093**	30093	30093	**30093**	30093	30093	**30093**	30093	–	–	–
	OHL input shaft	**(A)**	**(A)**	**(A)**	**(A)**	**(A)**	**(A)**	**(A)**	**(A)**	**(A)**	**(A)**	**(A)**	**(A)**	–	–	–
	OHL output shaft **(B)**	5433	**5433**	5433	5433	**5433**	5433	5433	**5433**	5433	5433	**5433**	5433	–	–	–

Service factor: 1.0

(A) (B) (C) - See footnotes page on inside back cover

Blank areas (-) indicate configuration not available

MSM 108

Size: MW1085

Five-stage reduction – Clamp collar, three-piece coupled, separate

NEMA motor frame		56C			—			140TC			180TC			—		
IEC motor frame		71D			80D			90D			100D			112D		
Separate group		71			80			90			100			112		
Ratio	Output Rating data	3450	1750	1160	3450	1750	1160	3450	1750	1160	3450	1750	1160	3450	1750	1160
	Output RPM	0.63	**0.32**	0.21	0.63	**0.32**	0.21	0.63	**0.32**	0.21	0.63	**0.32**	0.21	–	–	–
	Input Hp (max) **(C)**	0.30	**0.15**	0.10	0.30	**0.15**	0.10	0.30	**0.15**	0.10	0.30	**0.15**	0.10	–	–	–
5509.55	Output torque, in–lb	30093	**30093**	30093	30093	**30093**	30093	30093	**30093**	30093	30093	**30093**	30093	–	–	–
	OHL input shaft	**(A)**	**(A)**	**(A)**	**(A)**	**(A)**	**(A)**	**(A)**	**(A)**	**(A)**	**(A)**	**(A)**	**(A)**	–	–	–
	OHL output shaft **(B)**	5433	**5433**	5433	5433	**5433**	5433	5433	**5433**	5433	5433	**5433**	5433	–	–	–
	Output RPM	0.55	**0.28**	0.19	0.55	**0.28**	0.19	0.55	**0.28**	0.19	0.55	**0.28**	0.19	–	–	–
	Input Hp (max) **(C)**	0.26	**0.13**	0.09	0.26	**0.13**	0.09	0.26	**0.13**	0.09	0.26	**0.13**	0.09	–	–	–
6324.24	Output torque, in–lb	30093	**30093**	30093	30093	**30093**	30093	30093	**30093**	30093	30093	**30093**	30093	–	–	–
	OHL input shaft	**(A)**	**(A)**	**(A)**	**(A)**	**(A)**	**(A)**	**(A)**	**(A)**	**(A)**	**(A)**	**(A)**	**(A)**	–	–	–
	OHL output shaft **(B)**	5433	**5433**	5433	5433	**5433**	5433	5433	**5433**	5433	5433	**5433**	5433	–	–	–
	Output RPM	0.48	**0.24**	0.16	0.48	**0.24**	0.16	0.48	**0.24**	0.16	0.48	**0.24**	0.16	–	–	–
	Input Hp (max) **(C)**	0.23	**0.12**	0.08	0.23	**0.12**	0.08	0.23	**0.12**	0.08	0.23	**0.12**	0.08	–	–	–
7155.31	Output torque, in–lb	30093	**30093**	30093	30093	**30093**	30093	30093	**30093**	30093	30093	**30093**	30093	–	–	–
	OHL input shaft	**(A)**	**(A)**	**(A)**	**(A)**	**(A)**	**(A)**	**(A)**	**(A)**	**(A)**	**(A)**	**(A)**	**(A)**	–	–	–
	OHL output shaft **(B)**	5433	**5433**	5433	5433	**5433**	5433	5433	**5433**	5433	5433	**5433**	5433	–	–	–

Service factor: 1.0

(A) (B) (C) - See footnotes page on inside back cover

Blank areas (-) indicate configuration not available

MSM 128

Size: MW1282

Double reduction – Clamp collar, three-piece coupled, separate

NEMA motor frame		180TC			—			210TC			250TC			280TC			320TC			360TC		
IEC motor frame		100D			112D			132D			160D			180D / 200D			225D			—		
Separate group		100			112			132			160			180			225			—		
Ratio	Output Rating data	3450	1750	1160	3450	1750	1160	3450	1750	1160	3450	1750	1160	3450	1750	1160	3450	1750	1160	3450	1750	1160
	Output RPM	–	–	–	–	–	–	–	–	–	503	**255**	169	503	**255**	169	503	**255**	169	503	**255**	169
	Input Hp (max) **(C)**	–	–	–	–	–	–	–	–	–	89.63	**45.47**	30.14	182.55	**92.60**	61.38	199.92	**133.21**	74.42	199.92	**133.21**	74.42
6.86	Output torque, in–lb	–	–	–	–	–	–	–	–	–	11227	**11227**	11227	22867	**22867**	22867	25041	**32894**	27724	25041	**32894**	27724
	OHL input shaft	–	–	–	–	–	–	–	–	–	**(A)**	**1523**	1587	**(A)**	**1739**	2487	**(A)**	**2184**	2284	(A)	**2184**	2284
	OHL output shaft **(B)**	–	–	–	–	–	–	–	–	–	**(A)**	**6777**	6777	**(A)**	**6777**	6777	**(A)**	**6777**	6777	(A)	**6777**	6777
	Output RPM	–	–	–	–	–	–	–	–	–	378	**192**	127	378	**192**	127	378	**192**	127	378	**192**	127
	Input Hp (max) **(C)**	–	–	–	–	–	–	–	–	–	89.63	**45.47**	30.14	174.06	**92.60**	61.18	174.06	**115.99**	71.76	174.06	**115.99**	71.76
9.12	Output torque, in–lb	–	–	–	–	–	–	–	–	–	14938	**14938**	14938	29009	**30425**	30325	29009	**38108**	35571	29009	**38108**	35571
	OHL input shaft	–	–	–	–	–	–	–	–	–	**(A)**	**1474**	1586	**(A)**	**1631**	2470	**(A)**	**2191**	2274	(A)	**2191**	2274
	OHL output shaft **(B)**	–	–	–	–	–	–	–	–	–	**(A)**	**6777**	6777	**(A)**	**6777**	6777	**(A)**	**6777**	6777	(A)	**6777**	6777
	Output RPM	–	–	–	–	–	–	327	**166**	110	327	**166**	110	327	**166**	110	327	**166**	110	327	**166**	110
	Input Hp (max) **(C)**	–	–	–	–	–	–	64.54	**32.08**	17.88	89.63	**45.47**	30.14	161.31	**92.60**	59.69	161.31	**107.48**	69.87	161.31	**107.48**	69.87
10.56	Output torque, in–lb	–	–	–	–	–	–	12455	**12206**	10262	17297	**17297**	17297	31129	**35229**	34259	31129	**40891**	40099	31129	**40891**	40099
	OHL input shaft	–	–	–	–	–	–	**(A)**	**950**	992	**(A)**	**1442**	1585	**(A)**	**1562**	2490	**(A)**	**2194**	2287	(A)	**2194**	2287
	OHL output shaft **(B)**	–	–	–	–	–	–	**(A)**	**6777**	6777	**(A)**	**6777**	6777	**(A)**	**6777**	6777	**(A)**	**6777**	6777	(A)	**6777**	6777
	Output RPM	–	–	–	–	–	–	277	**140**	93	277	**140**	93	277	**140**	93	277	**140**	93	277	**140**	93
	Input Hp (max) **(C)**	–	–	–	–	–	–	64.54	**30.93**	17.24	89.63	**45.47**	30.14	147.43	**92.60**	57.33	147.43	**98.14**	65.97	147.43	**98.14**	65.97
12.47	Output torque, in–lb	–	–	–	–	–	–	14705	**13894**	11681	20421	**20421**	20421	33588	**41592**	38845	33588	**44080**	44699	33588	**44080**	44699
	OHL input shaft	–	–	–	–	–	–	**(A)**	**950**	993	**(A)**	**1397**	1578	**(A)**	**1297**	2489	**(A)**	**2194**	2288	(A)	**2194**	2288
	OHL output shaft **(B)**	–	–	–	–	–	–	**(A)**	**6777**	6777	**(A)**	**6777**	6777	**(A)**	**6777**	6777	**(A)**	**6777**	6777	(A)	**6777**	6777
	Output RPM	–	–	–	248	**126**	83	248	**126**	83	248	**126**	83	248	**126**	83	248	**126**	83	248	**126**	83
	Input Hp (max) **(C)**	–	–	–	27.34	**13.87**	9.19	64.54	**30.05**	16.74	89.63	**45.47**	30.14	138.63	**89.76**	55.53	138.63	**89.76**	60.33	138.63	**89.76**	60.33
13.92	Output torque, in–lb	–	–	–	6955	**6955**	6955	16418	**15070**	12668	22801	**22801**	22801	35264	**45011**	42012	35264	**45011**	45639	35264	**45011**	45639
	OHL input shaft	–	–	–	**(A)**	**838**	873	**(A)**	**950**	993	**(A)**	**1363**	1585	**(A)**	**1177**	2487	**(A)**	**2198**	2291	(A)	**2198**	2291
	OHL output shaft **(B)**	–	–	–	6777	**6777**	6777	6777	**6777**	6777	6777	**6777**	6777	6777	**6777**	6777	6777	**6777**	6777	6777	**6777**	6777
	Output RPM	–	–	–	212	**108**	71	212	**108**	71	212	**108**	71	212	**108**	71	212	**108**	71	212	**108**	71
	Input Hp (max) **(C)**	–	–	–	27.34	**13.87**	9.19	64.54	**28.68**	15.98	89.63	**45.47**	29.02	126.76	**78.94**	52.96	126.76	**78.94**	53.05	126.76	**78.94**	53.05
16.27	Output torque, in–lb	–	–	–	8126	**8126**	8126	19185	**16806**	14130	26642	**26642**	25659	37678	**46256**	46815	37678	**46256**	46898	37678	**46256**	46898
	OHL input shaft	–	–	–	**(A)**	**843**	869	**(A)**	**949**	994	**(A)**	**1308**	1584	**(A)**	**1219**	2479	**(A)**	**2183**	2278	(A)	**2183**	2278
	OHL output shaft **(B)**	–	–	–	6777	**6777**	6777	6777	**6777**	6777	6777	**6777**	6777	6777	**6777**	6777	6777	**6777**	6777	6777	**6777**	6777
	Output RPM	–	–	–	185	**94**	62	185	**94**	62	185	**94**	62	185	**94**	62	185	**94**	62	185	**94**	62
	Input Hp (max) **(C)**	–	–	–	27.34	**13.87**	9.19	64.54	**27.30**	15.21	89.63	**45.47**	27.54	116.96	**70.38**	47.30	116.96	**70.38**	47.30	116.96	**70.38**	47.30
18.65	Output torque, in–lb	–	–	–	9317	**9317**	9317	21995	**18337**	15415	30545	**30545**	27908	39856	**47282**	47943	39856	**47282**	47943	39856	**47282**	47943
	OHL input shaft	–	–	–	**(A)**	**843**	877	**(A)**	**947**	994	**(A)**	**1218**	1580	**(A)**	**1250**	2487	**(A)**	**2192**	2285	(A)	**2192**	2285
	OHL output shaft **(B)**	–	–	–	6777	**6777**	6777	6777	**6777**	6777	6777	**6777**	6777	6777	**6777**	6777	6777	**6777**	6777	6777	**6777**	6777
	Output RPM	–	–	–	160	**81**	54	160	**81**	54	160	**81**	54	160	**81**	54	160	**81**	54	160	**81**	54
	Input Hp (max) **(C)**	–	–	–	27.34	**13.87**	9.19	63.18	**25.68**	14.32	89.63	**45.47**	25.89	107.16	**62.20**	41.80	107.16	**62.20**	41.80	107.16	**62.20**	41.80
21.57	Output torque, in–lb	–	–	–	10772	**10772**	10772	24892	**19947**	16774	35315	**35315**	30335	42219	**48313**	48980	42219	**48313**	48980	42219	**48313**	48980
	OHL input shaft	–	–	–	**(A)**	**842**	877	**(A)**	**946**	994	**(A)**	**1008**	1576	**(A)**	**1278**	2492	**(A)**	**2198**	2291	(A)	**2198**	2291
	OHL output shaft **(B)**	–	–	–	6777	**6777**	6777	6777	**6777**	6777	6777	**6777**	6777	6777	**6777**	6777	6777	**6777**	6777	6777	**6777**	6777
	Output RPM	154	**78**	52	154	**78**	52	154	**78**	52	154	**78**	52	154	**78**	52	154	**78**	52	154	**78**	52
	Input Hp (max) **(C)**	20.42	**10.36**	6.87	27.34	**13.87**	9.19	61.33	**25.23**	14.06	89.63	**45.47**	25.42	104.76	**60.26**	40.50	104.76	**60.26**	40.50	104.76	**60.26**	40.50
22.39	Output torque, in–lb	8350	**8350**	8350	11180	**11180**	11180	25082	**20342**	17103	36654	**36654**	30920	42839	**48581**	49258	42839	**48581**	49258	42839	**48581**	49258
	OHL input shaft	**(A)**	**708**	738	**(A)**	**841**	876	**(A)**	**946**	995	**(A)**	**950**	1590	**(A)**	**1284**	2493	**(A)**	**2199**	2292	(A)	**2199**	2292
	OHL output shaft **(B)**	6777	**6777**	6777	6777	**6777**	6777	6777	**6777**	6777	6777	**6777**	6777	6777	**6777**	6777	6777	**6777**	6777	6777	**6777**	6777
	Output RPM	144	**73**	48	144	**73**	48	144	**73**	48	144	**73**	48	144	**73**	48	144	**73**	48	–	–	–
	Input Hp (max) **(C)**	20.42	**10.36**	6.87	27.34	**13.87**	9.19	64.54	**32.74**	19.83	80.05	**45.47**	30.14	78.02	**51.99**	36.47	78.02	**51.99**	36.47	–	–	–
23.96	Output torque, in–lb	8939	**8939**	8939	11969	**11969**	11969	28256	**28256**	25819	35044	**39240**	39240	34157	**44868**	47491	34157	**44868**	47491	–	–	–
	OHL input shaft	**(A)**	**713**	742	**(A)**	**843**	869	**(A)**	**949**	985	**(A)**	**1360**	1578	**(A)**	**1771**	2090	**(A)**	**2201**	2290	–	–	–
	OHL output shaft **(B)**	6777	**6777**	6777	6777	**6777**	6777	6777	**6777**	6777	6777	**6777**	6777	6777	**6777**	6777	6777	**6777**	6777	–	–	–
	Output RPM	139	**71**	47	139	**71**	47	139	**71**	47	139	**71**	47	139	**71**	47	139	**71**	47	–	–	–
	Input Hp (max) **(C)**	20.42	**10.36**	6.87	27.34	**13.87**	9.07	56.53	**24.08**	13.42	76.66	**43.37**	24.37	98.42	**55.23**	37.12	98.42	**55.23**	37.12	–	–	–
24.77	Output torque, in–lb	9239	**9239**	9239	12371	**12371**	12202	25580	**21482**	18063	34688	**38689**	32801	44536	**49267**	49951	44536	**49267**	49951	–	–	–
	OHL input shaft	**(A)**	**711**	735	**(A)**	**839**	875	**(A)**	**953**	995	**(A)**	**880**	1591	**(A)**	**1300**	2495	**(A)**	**2201**	2295	–	–	–
	OHL output shaft **(B)**	6777	**6777**	6777	6777	**6777**	6777	6777	**6777**	6777	6777	**6777**	6777	6777	**6777**	6777	6777	**6777**	6777	–	–	–

Service factor: 1.0

(A) (B) (C) - See footnotes page on inside back cover

Blank areas (-) indicate configuration not available

MSM 128

Size: MW1282

Double reduction – Clamp collar, three-piece coupled, separate

NEMA motor frame		180TC			—			210TC			250TC			280TC			320TC			360TC		
IEC motor frame		100D			112D			132D			160D			180D / 200D			225D			—		
Separate group		100			112			132			160			180			225			—		
Ratio	Output Rating data	3450	1750	1160	3450	1750	1160	3450	1750	1160	3450	1750	1160	3450	1750	1160	3450	1750	1160	3450	1750	1160
	Output RPM	125	**63**	42	125	**63**	42	125	**63**	42	125	**63**	42	125	**63**	42	125	**63**	42	–	–	–
	Input Hp (max) **(C)**	20.42	**10.36**	6.87	27.34	**13.87**	9.19	64.54	**32.74**	19.44	71.23	**45.47**	30.14	70.30	**46.84**	32.86	70.30	**46.84**	32.86	–	–	–
27.66	Output torque, in–lb	10316	**10316**	10316	13813	**13813**	13813	32610	**32610**	29209	35989	**45287**	45287	35518	**46656**	49383	35518	**46656**	49383	–	–	–
	OHL input shaft	**(A)**	**713**	742	**(A)**	**843**	877	**(A)**	**951**	990	**(A)**	**1332**	1583	**(A)**	**1775**	2094	**(A)**	**2203**	2293	–	–	–
	OHL output shaft **(B)**	6777	**6777**	6777	6777	**6777**	6777	6777	**6777**	6777	6777	**6777**	6777	6777	**6777**	6777	6777	**6777**	6777	–	–	–
	Output RPM	106	**54**	36	106	**54**	36	106	**54**	36	106	**54**	36	106	**54**	36	106	**54**	36	–	–	–
	Input Hp (max) **(C)**	20.42	**10.36**	6.87	27.34	**13.87**	9.19	62.56	**32.74**	19.11	62.56	**41.68**	28.57	62.56	**41.68**	28.57	62.56	**41.68**	28.57	–	–	–
32.50	Output torque, in–lb	12122	**12122**	12122	16231	**16231**	16231	37137	**38317**	33733	37137	**48785**	50451	37137	**48785**	50451	37137	**48785**	50451	–	–	–
	OHL input shaft	**(A)**	**711**	740	**(A)**	**842**	877	**(A)**	**948**	986	**(A)**	**1266**	1548	**(A)**	**1775**	2110	**(A)**	**2205**	2296	–	–	–
	OHL output shaft **(B)**	6777	**6777**	6777	6777	**6777**	6777	6777	**6777**	6777	6777	**6777**	6777	6777	**6777**	6777	6777	**6777**	6777	–	–	–
	Output RPM	94	**48**	31	94	**48**	31	94	**48**	31	94	**48**	31	94	**48**	31	94	**48**	31	–	–	–
	Input Hp (max) **(C)**	20.42	**10.36**	6.87	27.34	**13.87**	9.19	57.17	**32.74**	18.42	57.17	**38.04**	25.21	57.17	**38.04**	25.21	57.17	**38.04**	25.21	–	–	–
36.83	Output torque, in–lb	13736	**13736**	13736	18393	**18393**	18393	38460	**43421**	36850	38460	**50451**	50451	38460	**50451**	50451	38460	**50451**	50451	–	–	–
	OHL input shaft	**(A)**	**708**	738	**(A)**	**839**	874	**(A)**	**644**	992	**(A)**	**1199**	1569	**(A)**	**1774**	2131	**(A)**	**2206**	2298	–	–	–
	OHL output shaft **(B)**	6777	**6777**	6777	6777	**6777**	6777	6777	**6777**	6777	6777	**6777**	6777	6777	**6777**	6777	6777	**6777**	6777	–	–	–
	Output RPM	80	**40**	27	80	**40**	27	80	**40**	27	80	**40**	27	80	**40**	27	80	**40**	27	–	–	–
	Input Hp (max) **(C)**	20.42	**10.36**	6.87	27.34	**13.87**	9.19	50.97	**31.21**	17.72	50.97	**32.42**	21.49	50.97	**32.42**	21.49	50.97	**32.42**	21.49	–	–	–
43.21	Output torque, in–lb	16119	**16119**	16119	21583	**21583**	21583	40236	**48580**	41601	40236	**50451**	50451	40236	**50451**	50451	40236	**50451**	50451	–	–	–
	OHL input shaft	**(A)**	**709**	739	**(A)**	**840**	869	**(A)**	**280**	992	**(A)**	**1206**	1590	**(A)**	**1797**	2154	**(A)**	**2208**	2300	–	–	–
	OHL output shaft **(B)**	6777	**6777**	6777	6777	**6777**	6777	6777	**6777**	6777	6777	**6777**	6777	6777	**6777**	6777	6777	**6777**	6777	–	–	–
	Output RPM	73	**37**	25	73	**37**	25	73	**37**	25	73	**37**	25	73	**37**	25	–	–	–	–	–	–
	Input Hp (max) **(C)**	20.42	**10.36**	6.87	27.34	**13.87**	9.19	47.70	**29.19**	16.82	47.89	**29.72**	19.70	47.89	**29.72**	19.70	–	–	–	–	–	–
47.14	Output torque, in–lb	17585	**17585**	17585	23545	**23545**	23545	41080	**49561**	43079	41244	**50451**	50451	41244	**50451**	50451	–	–	–	–	–	–
	OHL input shaft	**(A)**	**712**	736	**(A)**	**837**	873	**(A)**	**257**	992	**(A)**	**1235**	1580	**(A)**	**1807**	2165	–	–	–	–	–	–
	OHL output shaft **(B)**	6777	**6777**	6777	6777	**6777**	6777	6777	**6777**	6777	6777	**6777**	6777	6777	**6777**	6777	–	–	–	–	–	–
	Output RPM	67	**34**	23	67	**34**	23	67	**34**	23	67	**34**	23	67	**34**	23	–	–	–	–	–	–
	Input Hp (max) **(C)**	20.42	**10.36**	6.87	27.34	**13.87**	9.19	44.37	**27.24**	16.06	45.01	**27.24**	18.06	45.01	**27.24**	18.06	–	–	–	–	–	–
51.43	Output torque, in–lb	19182	**19182**	19182	25684	**25684**	25684	41687	**50451**	44880	42285	**50451**	50451	42285	**50451**	50451	–	–	–	–	–	–
	OHL input shaft	**(A)**	**556**	740	**(A)**	**611**	873	**(A)**	**240**	992	**(A)**	**1262**	1584	**(A)**	**1818**	2175	–	–	–	–	–	–
	OHL output shaft **(B)**	6777	**6777**	6777	6777	**6777**	6777	6777	**6777**	6777	6777	**6777**	6777	6777	**6777**	6777	–	–	–	–	–	–
	Output RPM	62	**32**	21	62	**32**	21	62	**32**	21	62	**32**	21	62	**32**	21	–	–	–	–	–	–
	Input Hp (max) **(C)**	19.74	**10.36**	6.83	25.84	**13.87**	8.83	41.60	**25.24**	15.05	42.63	**25.24**	16.73	42.63	**25.24**	16.73	–	–	–	–	–	–
55.50	Output torque, in–lb	20008	**20700**	20597	26196	**27718**	26609	42174	**50451**	45392	43224	**50451**	50451	43224	**50451**	50451	–	–	–	–	–	–
	OHL input shaft	**(A)**	**514**	738	**(A)**	**474**	877	**(A)**	**297**	992	**(A)**	**1281**	1586	**(A)**	**1826**	2183	–	–	–	–	–	–
	OHL output shaft **(B)**	6777	**6777**	6777	6777	**6777**	6777	6777	**6777**	6777	6777	**6777**	6777	6777	**6777**	6777	–	–	–	–	–	–
	Output RPM	56	**28**	19	56	**28**	19	56	**28**	19	56	**28**	19	–	–	–	–	–	–	–	–	–
	Input Hp (max) **(C)**	18.04	**9.82**	6.58	23.50	**13.87**	8.49	37.82	**22.59**	14.51	39.39	**22.59**	14.97	–	–	–	–	–	–	–	–	–
62.03	Output torque, in–lb	20439	**21926**	22161	26630	**30978**	28611	42848	**50451**	48911	44632	**50451**	50451	–	–	–	–	–	–	–	–	–
	OHL input shaft	**(A)**	**437**	736	**(A)**	**253**	836	**(A)**	**369**	990	**(A)**	**1307**	1583	–	–	–	–	–	–	–	–	–
	OHL output shaft **(B)**	6777	**6777**	6777	6777	**6777**	6777	6777	**6777**	6777	6777	**6777**	6777	–	–	–	–	–	–	–	–	–
	Output RPM	52	**26**	17	52	**26**	17	52	**26**	17	52	**26**	17	–	–	–	–	–	–	–	–	–
	Input Hp (max) **(C)**	17.05	**9.28**	6.32	22.14	**13.60**	8.16	35.62	**21.08**	13.98	37.50	**21.08**	13.98	–	–	–	–	–	–	–	–	–
66.44	Output torque, in–lb	20691	**22194**	22798	26878	**32535**	29462	43237	**50451**	50451	45516	**50451**	50451	–	–	–	–	–	–	–	–	–
	OHL input shaft	**(A)**	**432**	724	**(A)**	**153**	792	**(A)**	**414**	989	**(A)**	**1323**	1586	–	–	–	–	–	–	–	–	–
	OHL output shaft **(B)**	6777	**6777**	6777	6777	**6777**	6777	6777	**6777**	6777	6777	**6777**	6777	–	–	–	–	–	–	–	–	–
	Output RPM	48	**24**	16	48	**24**	16	48	**24**	16	–	–	–	–	–	–	–	–	–	–	–	–
	Input Hp (max) **(C)**	16.04	**8.73**	6.00	20.79	**12.80**	7.87	33.43	**19.61**	13.00	–	–	–	–	–	–	–	–	–	–	–	–
71.45	Output torque, in–lb	20940	**22467**	23306	27134	**32939**	30565	43637	**50451**	50451	–	–	–	–	–	–	–	–	–	–	–	–
	OHL input shaft	**(A)**	**428**	700	**(A)**	**147**	728	**(A)**	**453**	991	–	–	–	–	–	–	–	–	–	–	–	–
	OHL output shaft **(B)**	6777	**6777**	6777	6777	**6777**	6777	6777	**6777**	6777	–	–	–	–	–	–	–	–	–	–	–	–
	Output RPM	45	**23**	15	45	**23**	15	45	**23**	15	–	–	–	–	–	–	–	–	–	–	–	–
	Input Hp (max) **(C)**	15.03	**8.18**	5.62	19.43	**11.99**	7.46	31.23	**18.15**	12.03	–	–	–	–	–	–	–	–	–	–	–	–
77.17	Output torque, in–lb	21195	**22742**	23580	27388	**33322**	31274	44026	**50451**	50451	–	–	–	–	–	–	–	–	–	–	–	–
	OHL input shaft	**(A)**	**423**	695	**(A)**	**141**	695	**(A)**	**495**	993	–	–	–	–	–	–	–	–	–	–	–	–
	OHL output shaft **(B)**	6777	**6777**	6777	6777	**6777**	6777	6777	**6777**	6777	–	–	–	–	–	–	–	–	–	–	–	–

Service factor: 1.0

(A) (B) (C) - See footnotes page on inside back cover

Blank areas (-) indicate configuration not available

MSM 128

Size: MW1283

Triple reduction – Clamp collar, three-piece coupled, separate

NEMA motor frame		140TC			180TC			—			210TC			250TC			280TC		
IEC motor frame		90D			100D			112D			132D			160D			180D/ 200D		
Separate group		90			100			112			132			160			180		
Ratio	Output Rating data	3450	1750	1160	3450	1750	1160	3450	1750	1160	3450	1750	1160	3450	1750	1160	3450	1750	1160
	Output RPM	–	–	–	–	–	–	–	–	–	79	40	27	79	40	27	79	40	27
	Input Hp (max) (C)	–	–	–	–	–	–	–	–	–	59.02	32.74	20.52	59.02	34.49	22.86	59.02	34.49	22.86
43.47	Output torque, in–lb	–	–	–	–	–	–	–	–	–	46864	51253	48451	46864	53991	53991	46864	53991	53989
	OHL input shaft	–	–	–	–	–	–	–	–	–	(A)	949	989	(A)	1529	1592	(A)	2096	2451
	OHL output shaft (B)	–	–	–	–	–	–	–	–	–	6777	6777	6777	6777	6777	6777	6777	6777	6777
	Output RPM	–	–	–	–	–	–	–	–	–	68	35	23	68	35	23	68	35	23
	Input Hp (max) (C)	–	–	–	–	–	–	–	–	–	53.93	29.64	19.65	53.93	29.64	19.65	53.93	29.64	19.65
50.57	Output torque, in–lb	–	–	–	–	–	–	–	–	–	49820	53991	53991	49820	53991	53991	49820	53991	53989
	OHL input shaft	–	–	–	–	–	–	–	–	–	(A)	951	991	(A)	1518	1582	(A)	2115	2470
	OHL output shaft (B)	–	–	–	–	–	–	–	–	–	6777	6777	6777	6777	6777	6777	6777	6777	6777
	Output RPM	–	–	–	–	–	–	62	31	21	62	31	21	62	31	21	62	31	21
	Input Hp (max) (C)	–	–	–	–	–	–	27.34	13.87	9.19	50.68	26.75	17.73	50.68	26.75	17.73	50.68	26.75	17.73
56.05	Output torque, in–lb	–	–	–	–	–	–	27995	27995	27995	51890	53991	53991	51890	53991	53991	51890	53991	53989
	OHL input shaft	–	–	–	–	–	–	(A)	837	872	(A)	953	993	(A)	1523	1586	(A)	2127	2484
	OHL output shaft (B)	–	–	–	–	–	–	6777	6777	6777	6777	6777	6777	6777	6777	6777	6777	6777	6777
	Output RPM	–	–	–	52	26	17	52	26	17	52	26	17	52	26	17	52	26	17
	Input Hp (max) (C)	–	–	–	20.42	10.36	6.87	27.34	13.87	9.19	44.37	22.51	14.92	44.37	22.51	14.92	44.37	22.51	14.92
66.61	Output torque, in–lb	–	–	–	24845	24845	24845	33267	33267	33267	53991	53991	53991	53991	53991	53991	53991	53991	53991
	OHL input shaft	–	–	–	(A)	713	742	(A)	843	877	(A)	955	994	(A)	1521	1584	(A)	2144	2502
	OHL output shaft (B)	–	–	–	6777	6777	6777	6777	6777	6777	6777	6777	6777	6777	6777	6777	6777	6777	6777
	Output RPM	–	–	–	45	23	15	45	23	15	45	23	15	45	23	15	–	–	–
	Input Hp (max) (C)	–	–	–	20.42	10.36	6.87	27.34	13.87	9.19	38.45	19.50	12.93	38.45	19.50	12.93	–	–	–
76.87	Output torque, in–lb	–	–	–	28673	28673	28673	38393	38393	38393	53991	53991	53991	53991	53991	53991	–	–	–
	OHL input shaft	–	–	–	(A)	713	742	(A)	843	877	(A)	956	986	(A)	1526	1589	–	–	–
	OHL output shaft (B)	–	–	–	6777	6777	6777	6777	6777	6777	6777	6777	6777	6777	6777	6777	–	–	–
	Output RPM	38	19	13	38	19	13	38	19	13	38	19	13	38	19	13	–	–	–
	Input Hp (max) (C)	9.86	5.00	3.32	20.42	10.36	6.87	27.34	13.87	9.19	32.72	16.60	11.00	32.72	16.60	11.00	–	–	–
90.32	Output torque, in–lb	16274	16274	16274	33691	33691	33691	45112	45112	45112	53991	53991	53991	53991	53991	53991	–	–	–
	OHL input shaft	(A)	453	471	(A)	711	740	(A)	841	876	(A)	951	991	(A)	1529	1593	–	–	–
	OHL output shaft (B)	6777	6777	6777	6777	6777	6777	6777	6777	6777	6777	6777	6777	6777	6777	6777	–	–	–
	Output RPM	34	17	11	34	17	11	34	17	11	34	17	11	34	17	11	–	–	–
	Input Hp (max) (C)	9.86	5.00	3.32	20.42	10.36	6.87	27.34	13.87	9.07	28.87	14.65	9.71	28.87	14.65	9.71	–	–	–
102.35	Output torque, in–lb	18442	18442	18442	38179	38179	38179	51121	51121	50422	53991	53991	53991	53991	53991	53991	–	–	–
	OHL input shaft	(A)	454	473	(A)	708	738	(A)	838	874	(A)	949	989	(A)	1531	1594	–	–	–
	OHL output shaft (B)	6777	6777	6777	6777	6777	6777	6777	6777	6777	6777	6777	6777	6777	6777	6777	–	–	–
	Output RPM	29	15	10	29	15	10	29	15	10	29	15	10	29	15	10	–	–	–
	Input Hp (max) (C)	9.86	5.00	3.32	20.42	10.36	6.41	24.61	12.48	8.27	24.61	12.48	8.27	24.61	12.48	8.27	–	–	–
120.11	Output torque, in–lb	21642	21642	21642	44802	44802	41853	53991	53991	53991	53991	53991	53991	53991	53991	53991	–	–	–
	OHL input shaft	(A)	452	470	(A)	709	737	(A)	839	874	(A)	953	992	(A)	1532	1595	–	–	–
	OHL output shaft (B)	6777	6777	6777	6777	6777	6777	6777	6777	6777	6777	6777	6777	6777	6777	6777	–	–	–
	Output RPM	26	13	9	26	13	9	26	13	9	26	13	9	–	–	–	–	–	–
	Input Hp (max) (C)	9.86	5.00	3.32	20.42	10.36	6.15	22.56	11.44	7.58	22.56	11.44	7.58	–	–	–	–	–	–
131.03	Output torque, in–lb	23609	23609	23609	48875	48875	43812	53991	53991	53991	53991	53991	53991	–	–	–	–	–	–
	OHL input shaft	(A)	456	474	(A)	712	736	(A)	841	876	(A)	955	994	–	–	–	–	–	–
	OHL output shaft (B)	6777	6777	6777	6777	6777	6777	6777	6777	6777	6777	6777	6777	–	–	–	–	–	–
	Output RPM	24	12	8	24	12	8	24	12	8	24	12	8	–	–	–	–	–	–
	Input Hp (max) (C)	9.86	5.00	3.25	20.42	10.34	5.89	20.68	10.49	6.95	20.68	10.49	6.95	–	–	–	–	–	–
142.93	Output torque, in–lb	25754	25754	25243	53314	53213	45775	53991	53991	53991	53991	53991	53991	–	–	–	–	–	–
	OHL input shaft	(A)	456	475	(A)	630	736	(A)	842	877	(A)	955	995	–	–	–	–	–	–
	OHL output shaft (B)	6777	6777	6777	6777	6777	6777	6777	6777	6777	6777	6777	6777	–	–	–	–	–	–
	Output RPM	22	11	8	22	11	8	22	11	8	22	11	8	–	–	–	–	–	–
	Input Hp (max) (C)	9.86	5.00	3.14	19.16	9.72	5.67	19.16	9.72	6.44	19.16	9.72	6.44	–	–	–	–	–	–
154.25	Output torque, in–lb	27792	27792	26292	53991	53991	47480	53991	53991	53991	53991	53991	53991	–	–	–	–	–	–
	OHL input shaft	(A)	455	475	(A)	627	735	(A)	843	877	(A)	956	996	–	–	–	–	–	–
	OHL output shaft (B)	6777	6777	6777	6777	6777	6777	6777	6777	6777	6777	6777	6777	–	–	–	–	–	–

Service factor: 1.0

(A) (B) (C) - See footnotes page on inside back cover

Blank areas (-) indicate configuration not available

MSM 128

Size: MW1283

Triple reduction – Clamp collar, three-piece coupled, separate

NEMA motor frame		140TC			180TC			—			210TC			250TC			280TC		
IEC motor frame		90D			100D			112D			132D			160D			180D/ 200D		
Separate group		90			100			112			132			160			180		
Ratio	Output Rating data	3450	1750	1160	3450	1750	1160	3450	1750	1160	3450	1750	1160	3450	1750	1160	3450	1750	1160
	Output RPM	20	**10**	7	20	**10**	7	20	**10**	7	20	**10**	7	–	–	–	–	–	–
	Input Hp (max) **(C)**	9.86	**5.00**	2.97	17.14	**8.70**	5.33	17.14	**8.70**	5.76	17.14	**8.70**	5.76	–	–	–	–	–	–
172.39	Output torque, in–lb	31062	**31062**	27801	53991	**53991**	49965	53991	**53991**	53991	53991	**53991**	53991	–	–	–	–	–	–
	OHL input shaft	**(A)**	**454**	475	**(A)**	**654**	739	**(A)**	**843**	878	**(A)**	**957**	996	–	–	–	–	–	–
	OHL output shaft **(B)**	6777	**6777**	6777	6777	**6777**	6777	6777	**6777**	6777	6777	**6777**	6777	–	–	–	–	–	–
	Output RPM	19	**9**	6	19	**9**	6	19	**9**	6	19	**9**	6	–	–	–	–	–	–
	Input Hp (max) **(C)**	9.86	**5.00**	2.86	16.00	**8.12**	5.14	16.00	**8.12**	5.38	16.00	**8.12**	5.38	–	–	–	–	–	–
184.67	Output torque, in–lb	33274	**33274**	28727	53991	**53991**	51587	53991	**53991**	53991	53991	**53991**	53991	–	–	–	–	–	–
	OHL input shaft	**(A)**	**452**	475	**(A)**	**670**	739	**(A)**	**844**	878	**(A)**	**957**	997	–	–	–	–	–	–
	OHL output shaft **(B)**	6777	**6777**	6777	6777	**6777**	6777	6777	**6777**	6777	6777	**6777**	6777	–	–	–	–	–	–
	Output RPM	17	**9**	6	17	**9**	6	17	**9**	6	17	**9**	6	–	–	–	–	–	–
	Input Hp (max) **(C)**	9.86	**4.81**	2.75	14.88	**7.55**	4.94	14.88	**7.55**	5.00	14.88	**7.55**	5.00	–	–	–	–	–	–
198.58	Output torque, in–lb	35781	**34418**	29694	53991	**53991**	53346	53991	**53991**	53991	53991	**53991**	53991	–	–	–	–	–	–
	OHL input shaft	**(A)**	**452**	474	**(A)**	**685**	738	**(A)**	**844**	879	**(A)**	**958**	997	–	–	–	–	–	–
	OHL output shaft **(B)**	6777	**6777**	6777	6777	**6777**	6777	6777	**6777**	6777	6777	**6777**	6777	–	–	–	–	–	–
	Output RPM	16	**8**	5	16	**8**	5	16	**8**	5	16	**8**	5	–	–	–	–	–	–
	Input Hp (max) **(C)**	9.70	**4.61**	2.64	13.78	**6.99**	4.63	13.78	**6.99**	4.63	13.78	**6.99**	4.63	–	–	–	–	–	–
214.48	Output torque, in–lb	38012	**35607**	30719	53991	**53991**	53991	53991	**53991**	53991	53991	**53991**	53991	–	–	–	–	–	–
	OHL input shaft	**(A)**	**452**	474	**(A)**	**700**	739	**(A)**	**844**	879	**(A)**	**958**	997	–	–	–	–	–	–
	OHL output shaft **(B)**	6777	**6777**	6777	6777	**6777**	6777	6777	**6777**	6777	6777	**6777**	6777	–	–	–	–	–	–

Service factor: 1.0

(A) (B) (C) - See footnotes page on inside back cover

Blank areas (-) indicate configuration not available

MSM 128

Size: MW1284

Four-stage reduction – Clamp collar, three-piece coupled, separate

NEMA motor frame		56C			—			140TC			180TC			—			210TC		
IEC motor frame		71D			80D			90D			100D			112D			132D		
Separate group		71			80			90			100			112			132		
Ratio	Output Rating data	3450	1750	1160	3450	1750	1160	3450	1750	1160	3450	1750	1160	3450	1750	1160	3450	1750	1160
	Output RPM	13.84	**7.02**	4.69	13.84	**7.02**	4.69	13.84	**7.02**	4.69	13.84	**7.02**	4.69	13.84	**7.02**	4.69	13.84	**7.02**	4.69
	Input Hp (max) **(C)**	3.98	**2.02**	1.34	4.85	**2.46**	1.63	7.69	**3.90**	2.59	11.85	**6.01**	3.99	11.85	**6.01**	3.99	11.85	**6.01**	3.99
249.31	Output torque, in–lb	18127	**18137**	18151	22089	**22088**	18151	35024	**35017**	35083	53991	**53991**	53991	53991	**53991**	53991	53991	**53991**	53991
	OHL input shaft	**(A)**	**(A)**	**(A)**	**(A)**	**(A)**	**(A)**	**(A)**	**(A)**	**(A)**	**(A)**	**(A)**	**(A)**	**(A)**	**(A)**	**(A)**	**(A)**	**(A)**	**(A)**
	OHL output shaft **(B)**	6777	**6777**	6777	6777	**6777**	6777	6777	**6777**	6777	6777	**6777**	6777	6777	**6777**	6777	6777	**6777**	6777
	Output RPM	12.73	**6.46**	4.32	12.73	**6.46**	4.32	12.73	**6.46**	4.32	12.73	**6.46**	4.32	12.73	**6.46**	4.32	12.73	**6.46**	4.32
	Input Hp (max) **(C)**	3.98	**2.02**	1.34	4.85	**2.46**	1.63	7.35	**3.73**	2.47	10.90	**5.53**	3.67	10.90	**5.53**	3.67	10.90	**5.53**	3.67
271.06	Output torque, in–lb	19708	**19719**	19734	24016	**24014**	19734	36395	**36412**	36376	53991	**53991**	53991	53991	**53991**	53991	53991	**53991**	53991
	OHL input shaft	**(A)**	**(A)**	**(A)**	**(A)**	**(A)**	**(A)**	**(A)**	**(A)**	**(A)**	**(A)**	**(A)**	**(A)**	**(A)**	**(A)**	**(A)**	**(A)**	**(A)**	**(A)**
	OHL output shaft **(B)**	6777	**6777**	6777	6777	**6777**	6777	6777	**6777**	6777	6777	**6777**	6777	6777	**6777**	6777	6777	**6777**	6777
	Output RPM	12.00	**6.09**	4.07	12.00	**6.09**	4.07	12.00	**6.09**	4.07	12.00	**6.09**	4.07	12.00	**6.09**	4.07	12.00	**6.09**	4.07
	Input Hp (max) **(C)**	3.98	**2.02**	1.34	4.85	**2.46**	1.63	8.83	**4.48**	2.97	10.28	**5.21**	3.46	10.28	**5.21**	3.46	10.28	**5.21**	3.46
287.49	Output torque, in–lb	20903	**20915**	20931	25472	**25471**	20931	46375	**46385**	46392	53991	**53991**	53991	53991	**53991**	53991	53991	**53991**	53991
	OHL input shaft	**(A)**	**(A)**	**(A)**	**(A)**	**(A)**	**(A)**	**(A)**	**(A)**	**(A)**	**(A)**	**(A)**	**(A)**	**(A)**	**(A)**	**(A)**	**(A)**	**(A)**	**(A)**
	OHL output shaft **(B)**	6777	**6777**	6777	6777	**6777**	6777	6777	**6777**	6777	6777	**6777**	6777	6777	**6777**	6777	6777	**6777**	6777
	Output RPM	10.91	**5.53**	3.70	10.91	**5.53**	3.70	10.91	**5.53**	3.70	10.91	**5.53**	3.70	10.91	**5.53**	3.70	10.91	**5.53**	3.70
	Input Hp (max) **(C)**	3.98	**2.02**	1.34	4.85	**2.46**	1.63	9.35	**4.74**	3.14	9.35	**4.74**	3.14	9.35	**4.74**	3.14	9.35	**4.74**	3.14
316.26	Output torque, in–lb	22994	**23008**	23025	28021	**28019**	23025	53991	**53991**	53991	53991	**53991**	53991	53991	**53991**	53991	53991	**53991**	53991
	OHL input shaft	**(A)**	**(A)**	**(A)**	**(A)**	**(A)**	**(A)**	**(A)**	**(A)**	**(A)**	**(A)**	**(A)**	**(A)**	**(A)**	**(A)**	**(A)**	**(A)**	**(A)**	**(A)**
	OHL output shaft **(B)**	6777	**6777**	6777	6777	**6777**	6777	6777	**6777**	6777	6777	**6777**	6777	6777	**6777**	6777	6777	**6777**	6777
	Output RPM	9.44	**4.79**	3.20	9.44	**4.79**	3.20	9.44	**4.79**	3.20	9.44	**4.79**	3.20	9.44	**4.79**	3.20	–	–	–
	Input Hp (max) **(C)**	3.41	**1.73**	1.15	4.57	**2.32**	1.54	8.08	**4.10**	2.72	8.08	**4.10**	2.72	8.08	**4.10**	2.72	–	–	–
365.62	Output torque, in–lb	22776	**22780**	22845	30524	**30549**	22845	53991	**53991**	53991	53991	**53991**	53991	53991	**53991**	53991	–	–	–
	OHL input shaft	**(A)**	**(A)**	**(A)**	**(A)**	**(A)**	**(A)**	**(A)**	**(A)**	**(A)**	**(A)**	**(A)**	**(A)**	**(A)**	**(A)**	**(A)**	–	–	–
	OHL output shaft **(B)**	6777	**6777**	6777	6777	**6777**	6777	6777	**6777**	6777	6777	**6777**	6777	6777	**6777**	6777	–	–	–
	Output RPM	8.61	**4.37**	2.92	8.61	**4.37**	2.92	8.61	**4.37**	2.92	8.61	**4.37**	2.92	8.61	**4.37**	2.92	–	–	–
	Input Hp (max) **(C)**	3.25	**1.65**	1.09	4.32	**2.19**	1.45	7.38	**3.74**	2.48	7.38	**3.74**	2.48	7.38	**3.74**	2.48	–	–	–
400.51	Output torque, in–lb	23779	**23800**	23719	31608	**31589**	23719	53991	**53991**	53991	53991	**53991**	53991	53991	**53991**	53991	–	–	–
	OHL input shaft	**(A)**	**(A)**	**(A)**	**(A)**	**(A)**	**(A)**	**(A)**	**(A)**	**(A)**	**(A)**	**(A)**	**(A)**	**(A)**	**(A)**	**(A)**	–	–	–
	OHL output shaft **(B)**	6777	**6777**	6777	6777	**6777**	6777	6777	**6777**	6777	6777	**6777**	6777	6777	**6777**	6777	–	–	–
	Output RPM	8.51	**4.32**	2.89	8.51	**4.32**	2.89	8.51	**4.32**	2.89	8.51	**4.32**	2.89	8.51	**4.32**	2.89	8.51	**4.32**	2.89
	Input Hp (max) **(C)**	3.41	**1.73**	1.15	4.57	**2.32**	1.54	7.29	**3.70**	2.45	7.29	**3.70**	2.45	7.29	**3.70**	2.45	7.29	**3.70**	2.45
405.24	Output torque, in–lb	25244	**25248**	25320	33832	**33859**	25320	53991	**53991**	53991	53991	**53991**	53991	53991	**53991**	53991	53991	**53991**	53991
	OHL input shaft	**(A)**	**(A)**	**(A)**	**(A)**	**(A)**	**(A)**	**(A)**	**(A)**	**(A)**	**(A)**	**(A)**	**(A)**	**(A)**	**(A)**	**(A)**	**(A)**	**(A)**	**(A)**
	OHL output shaft **(B)**	6777	**6777**	6777	6777	**6777**	6777	6777	**6777**	6777	6777	**6777**	6777	6777	**6777**	6777	6777	**6777**	6777
	Output RPM	7.39	**3.75**	2.51	7.39	**3.75**	2.51	7.39	**3.75**	2.51	7.39	**3.75**	2.51	7.39	**3.75**	2.51	7.39	**3.75**	2.51
	Input Hp (max) **(C)**	3.98	**2.02**	1.34	4.85	**2.46**	1.63	6.33	**3.21**	2.13	6.33	**3.21**	2.13	6.33	**3.21**	2.13	6.33	**3.21**	2.13
466.72	Output torque, in–lb	33934	**33953**	33979	41351	**41349**	33979	53991	**53991**	53991	53991	**53991**	53991	53991	**53991**	53991	53991	**53991**	53991
	OHL input shaft	**(A)**	**(A)**	**(A)**	**(A)**	**(A)**	**(A)**	**(A)**	**(A)**	**(A)**	**(A)**	**(A)**	**(A)**	**(A)**	**(A)**	**(A)**	**(A)**	**(A)**	**(A)**
	OHL output shaft **(B)**	6777	**6777**	6777	6777	**6777**	6777	6777	**6777**	6777	6777	**6777**	6777	6777	**6777**	6777	6777	**6777**	6777
	Output RPM	7.24	**3.67**	2.45	7.24	**3.67**	2.45	7.24	**3.67**	2.45	7.24	**3.67**	2.45	7.24	**3.67**	2.45	7.24	**3.67**	2.45
	Input Hp (max) **(C)**	3.98	**2.02**	1.34	4.85	**2.46**	1.63	6.20	**3.15**	2.08	6.20	**3.15**	2.08	6.20	**3.15**	2.08	6.20	**3.15**	2.08
476.63	Output torque, in–lb	34655	**34674**	34701	42230	**42227**	34701	53991	**53991**	53991	53991	**53991**	53991	53991	**53991**	53991	53991	**53991**	53991
	OHL input shaft	**(A)**	**(A)**	**(A)**	**(A)**	**(A)**	**(A)**	**(A)**	**(A)**	**(A)**	**(A)**	**(A)**	**(A)**	**(A)**	**(A)**	**(A)**	**(A)**	**(A)**	**(A)**
	OHL output shaft **(B)**	6777	**6777**	6777	6777	**6777**	6777	6777	**6777**	6777	6777	**6777**	6777	6777	**6777**	6777	6777	**6777**	6777
	Output RPM	6.77	**3.44**	2.30	6.77	**3.44**	2.30	6.77	**3.44**	2.30	6.77	**3.44**	2.30	6.77	**3.44**	2.30	6.77	**3.44**	2.30
	Input Hp (max) **(C)**	3.98	**2.02**	1.34	4.85	**2.46**	1.63	5.80	**2.94**	1.95	5.80	**2.94**	1.95	5.80	**2.94**	1.95	5.80	**2.94**	1.95
509.27	Output torque, in–lb	37027	**37049**	37077	45121	**45119**	37077	53991	**53991**	53991	53991	**53991**	53991	53991	**53991**	53991	53991	**53991**	53991
	OHL input shaft	**(A)**	**(A)**	**(A)**	**(A)**	**(A)**	**(A)**	**(A)**	**(A)**	**(A)**	**(A)**	**(A)**	**(A)**	**(A)**	**(A)**	**(A)**	**(A)**	**(A)**	**(A)**
	OHL output shaft **(B)**	6777	**6777**	6777	6777	**6777**	6777	6777	**6777**	6777	6777	**6777**	6777	6777	**6777**	6777	6777	**6777**	6777
	Output RPM	6.54	**3.32**	2.22	6.54	**3.32**	2.22	6.54	**3.32**	2.22	6.54	**3.32**	2.22	6.54	**3.32**	2.22	–	–	–
	Input Hp (max) **(C)**	3.25	**1.65**	1.09	4.32	**2.19**	1.45	5.60	**2.84**	1.88	5.60	**2.84**	1.88	5.60	**2.84**	1.88	–	–	–
527.55	Output torque, in–lb	31321	**31349**	31243	41633	**41609**	31243	53991	**53991**	53991	53991	**53991**	53991	53991	**53991**	53991	–	–	–
	OHL input shaft	**(A)**	**(A)**	**(A)**	**(A)**	**(A)**	**(A)**	**(A)**	**(A)**	**(A)**	**(A)**	**(A)**	**(A)**	**(A)**	**(A)**	**(A)**	–	–	–
	OHL output shaft **(B)**	6777	**6777**	6777	6777	**6777**	6777	6777	**6777**	6777	6777	**6777**	6777	6777	**6777**	6777	–	–	–

Service factor: 1.0

(A) (B) (C) - See footnotes page on inside back cover

Blank areas (-) indicate configuration not available

MSM 128

Size: MW1284

Four-stage reduction – Clamp collar, three-piece coupled, separate

NEMA motor frame		56C			—			140TC			180TC			—			210TC		
IEC motor frame		71D			80D			90D			100D			112D			132D		
Separate group		71			80			90			100			112			132		
Ratio	Output Rating data	3450	1750	1160	3450	1750	1160	3450	1750	1160	3450	1750	1160	3450	1750	1160	3450	1750	1160
	Output RPM	6.05	**3.07**	2.05	6.05	**3.07**	2.05	6.05	**3.07**	2.05	6.05	**3.07**	2.05	6.05	**3.07**	2.05	6.05	**3.07**	2.05
	Input Hp (max) **(C)**	3.98	**2.02**	1.34	4.85	**2.46**	1.63	5.18	**2.63**	1.74	5.18	**2.63**	1.74	5.18	**2.63**	1.74	5.18	**2.63**	1.74
570.63	Output torque, in–lb	41489	**41513**	41545	50558	**50555**	41545	53991	**53991**	53991	53991	**53991**	53991	53991	**53991**	53991	53991	**53991**	53991
	OHL input shaft	**(A)**	(A)	(A)	(A)	(A)	(A)	(A)	(A)	(A)	(A)	(A)	(A)	(A)	(A)	(A)	(A)	(A)	(A)
	OHL output shaft **(B)**	6777	**6777**	6777	6777	**6777**	6777	6777	**6777**	6777	6777	**6777**	6777	6777	**6777**	6777	6777	**6777**	6777
	Output RPM	5.69	**2.89**	1.93	5.69	**2.89**	1.93	5.69	**2.89**	1.93	5.69	**2.89**	1.93	5.69	**2.89**	1.93	5.69	**2.89**	1.93
	Input Hp (max) **(C)**	3.80	**1.93**	1.28	4.85	**2.46**	1.63	4.88	**2.47**	1.64	4.88	**2.47**	1.64	4.88	**2.47**	1.64	4.88	**2.47**	1.64
605.91	Output torque, in–lb	42062	**42115**	42138	53684	**53681**	42138	53991	**53991**	53991	53991	**53991**	53991	53991	**53991**	53991	53991	**53991**	53991
	OHL input shaft	**(A)**	**(A)**	**(A)**	**(A)**	**(A)**	**(A)**	**(A)**	**(A)**	**(A)**	**(A)**	**(A)**	**(A)**	**(A)**	**(A)**	**(A)**	**(A)**	**(A)**	**(A)**
	OHL output shaft **(B)**	6777	**6777**	6777	6777	**6777**	6777	6777	**6777**	6777	6777	**6777**	6777	6777	**6777**	6777	6777	**6777**	6777
	Output RPM	5.21	**2.64**	1.77	5.21	**2.64**	1.77	5.21	**2.64**	1.77	5.21	**2.64**	1.77	5.21	**2.64**	1.77	5.21	**2.64**	1.77
	Input Hp (max) **(C)**	3.98	**2.02**	1.34	4.46	**2.26**	1.50	4.46	**2.26**	1.50	4.46	**2.26**	1.50	4.46	**2.26**	1.50	4.46	**2.26**	1.50
662.74	Output torque, in–lb	48186	**48214**	48251	53991	**53991**	48251	53991	**53991**	48251	53991	**53991**	48251	53991	**53991**	48251	53991	**53991**	48251
	OHL input shaft	**(A)**	**(A)**	**(A)**	**(A)**	**(A)**	**(A)**	**(A)**	**(A)**	**(A)**	**(A)**	**(A)**	**(A)**	**(A)**	**(A)**	**(A)**	**(A)**	**(A)**	**(A)**
	OHL output shaft **(B)**	6777	**6777**	6777	6777	**6777**	6777	6777	**6777**	6777	6777	**6777**	6777	6777	**6777**	6777	6777	**6777**	6777
	Output RPM	5.00	**2.53**	1.69	5.00	**2.53**	1.69	5.00	**2.53**	1.69	5.00	**2.53**	1.69	5.00	**2.53**	1.69	5.00	**2.53**	1.69
	Input Hp (max) **(C)**	3.98	**2.02**	1.34	4.28	**2.17**	1.44	4.28	**2.17**	1.44	4.28	**2.17**	1.44	4.28	**2.17**	1.44	4.28	**2.17**	1.44
690.67	Output torque, in–lb	50216	**50245**	50284	53991	**53991**	50284	53991	**53991**	50284	53991	**53991**	50284	53991	**53991**	50284	53991	**53991**	50284
	OHL input shaft	**(A)**	**(A)**	**(A)**	**(A)**	**(A)**	**(A)**	**(A)**	**(A)**	**(A)**	**(A)**	**(A)**	**(A)**	**(A)**	**(A)**	**(A)**	**(A)**	**(A)**	**(A)**
	OHL output shaft **(B)**	6777	**6777**	6777	6777	**6777**	6777	6777	**6777**	6777	6777	**6777**	6777	6777	**6777**	6777	6777	**6777**	6777
	Output RPM	4.50	**2.28**	1.53	4.50	**2.28**	1.53	4.50	**2.28**	1.53	4.50	**2.28**	1.53	4.50	**2.28**	1.53	4.50	**2.28**	1.53
	Input Hp (max) **(C)**	3.86	**1.96**	1.31	3.86	**1.96**	1.30	3.86	**1.96**	1.30	3.86	**1.96**	1.30	3.86	**1.96**	1.30	3.86	**1.96**	1.30
766.10	Output torque, in–lb	53991	**53991**	53991	53991	**53991**	53991	53991	**53991**	53991	53991	**53991**	53991	53991	**53991**	53991	53991	**53991**	53991
	OHL input shaft	**(A)**	**(A)**	**(A)**	**(A)**	**(A)**	**(A)**	**(A)**	**(A)**	**(A)**	**(A)**	**(A)**	**(A)**	**(A)**	**(A)**	**(A)**	**(A)**	**(A)**	**(A)**
	OHL output shaft **(B)**	6777	**6777**	6777	6777	**6777**	6777	6777	**6777**	6777	6777	**6777**	6777	6777	**6777**	6777	6777	**6777**	6777
	Output RPM	4.41	**2.23**	1.49	4.41	**2.23**	1.49	4.41	**2.23**	1.49	4.41	**2.23**	1.49	4.41	**2.23**	1.49	4.41	**2.23**	1.49
	Input Hp (max) **(C)**	3.77	**1.91**	1.28	3.77	**1.91**	1.27	3.77	**1.91**	1.27	3.77	**1.91**	1.27	3.77	**1.91**	1.27	3.77	**1.91**	1.27
783.00	Output torque, in–lb	53991	**53991**	53991	53991	**53991**	53991	53991	**53991**	53991	53991	**53991**	53991	53991	**53991**	53991	53991	**53991**	53991
	OHL input shaft	**(A)**	**(A)**	**(A)**	**(A)**	**(A)**	**(A)**	**(A)**	**(A)**	**(A)**	**(A)**	**(A)**	**(A)**	**(A)**	**(A)**	**(A)**	**(A)**	**(A)**	**(A)**
	OHL output shaft **(B)**	6777	**6777**	6777	6777	**6777**	6777	6777	**6777**	6777	6777	**6777**	6777	6777	**6777**	6777	6777	**6777**	6777
	Output RPM	3.97	**2.02**	1.35	3.97	**2.02**	1.35	3.97	**2.02**	1.35	3.97	**2.02**	1.35	3.97	**2.02**	1.35	–	–	–
	Input Hp (max) **(C)**	3.40	**1.73**	1.15	3.40	**1.73**	1.15	3.40	**1.73**	1.15	3.40	**1.73**	1.15	3.40	**1.73**	1.15	–	–	–
868.40	Output torque, in–lb	53991	**53991**	53991	53991	**53991**	53991	53991	**53991**	53991	53991	**53991**	53991	53991	**53991**	53991	–	–	–
	OHL input shaft	**(A)**	**(A)**	**(A)**	**(A)**	**(A)**	**(A)**	**(A)**	**(A)**	**(A)**	**(A)**	**(A)**	**(A)**	**(A)**	**(A)**	**(A)**	–	–	–
	OHL output shaft **(B)**	6777	**6777**	6777	6777	**6777**	6777	6777	**6777**	6777	6777	**6777**	6777	6777	**6777**	6777	–	–	–
	Output RPM	3.82	**1.94**	1.30	3.82	**1.94**	1.30	3.82	**1.94**	1.30	3.82	**1.94**	1.30	–	–	–	–	–	–
	Input Hp (max) **(C)**	3.27	**1.66**	1.11	3.27	**1.66**	1.11	3.27	**1.66**	1.11	3.27	**1.66**	1.11	–	–	–	–	–	–
902.73	Output torque, in–lb	53991	**53991**	53991	53991	**53991**	53991	53991	**53991**	53991	53991	**53991**	53991	–	–	–	–	–	–
	OHL input shaft	**(A)**	**(A)**	**(A)**	**(A)**	**(A)**	**(A)**	**(A)**	**(A)**	**(A)**	**(A)**	**(A)**	**(A)**	–	–	–	–	–	–
	OHL output shaft **(B)**	6777	**6777**	6777	6777	**6777**	6777	6777	**6777**	6777	6777	**6777**	6777	–	–	–	–	–	–
	Output RPM	3.38	**1.71**	1.15	3.38	**1.71**	1.15	3.38	**1.71**	1.15	3.38	**1.71**	1.15	3.38	**1.71**	1.15	3.38	**1.71**	1.15
	Input Hp (max) **(C)**	2.90	**1.47**	0.98	2.90	**1.47**	0.98	2.90	**1.47**	0.98	2.90	**1.47**	0.98	2.90	**1.47**	0.98	2.90	**1.47**	0.98
1020.55	Output torque, in–lb	53991	**53991**	53991	53991	**53991**	53991	53991	**53991**	53991	53991	**53991**	53991	53991	**53991**	53991	53991	**53991**	53991
	OHL input shaft	**(A)**	**(A)**	**(A)**	**(A)**	**(A)**	**(A)**	**(A)**	**(A)**	**(A)**	**(A)**	**(A)**	**(A)**	**(A)**	**(A)**	**(A)**	**(A)**	**(A)**	**(A)**
	OHL output shaft **(B)**	6777	**6777**	6777	6777	**6777**	6777	6777	**6777**	6777	6777	**6777**	6777	6777	**6777**	6777	6777	**6777**	6777
	Output RPM	2.93	**1.49**	1.00	2.93	**1.49**	1.00	2.93	**1.49**	1.00	2.93	**1.49**	1.00	2.93	**1.49**	1.00	2.93	**1.49**	1.00
	Input Hp (max) **(C)**	2.51	**1.28**	0.85	2.51	**1.28**	0.85	2.51	**1.28**	0.85	2.51	**1.28**	0.85	2.51	**1.28**	0.85	2.51	**1.28**	0.85
1175.59	Output torque, in–lb	53991	**53991**	53991	53991	**53991**	53991	53991	**53991**	53991	53991	**53991**	53991	53991	**53991**	53991	53991	**53991**	53991
	OHL input shaft	**(A)**	**(A)**	**(A)**	**(A)**	**(A)**	**(A)**	**(A)**	**(A)**	**(A)**	**(A)**	**(A)**	**(A)**	**(A)**	**(A)**	**(A)**	**(A)**	**(A)**	**(A)**
	OHL output shaft **(B)**	6777	**6777**	6777	6777	**6777**	6777	6777	**6777**	6777	6777	**6777**	6777	6777	**6777**	6777	6777	**6777**	6777
	Output RPM	2.91	**1.48**	0.99	2.91	**1.48**	0.99	2.91	**1.48**	0.99	2.91	**1.48**	0.99	2.91	**1.48**	0.99	2.91	**1.48**	0.99
	Input Hp (max) **(C)**	2.49	**1.26**	0.85	2.49	**1.26**	0.85	2.49	**1.26**	0.85	2.49	**1.26**	0.85	2.49	**1.26**	0.85	2.49	**1.26**	0.85
1185.58	Output torque, in–lb	53991	**53991**	53991	53991	**53991**	53991	53991	**53991**	53991	53991	**53991**	53991	53991	**53991**	53991	53991	**53991**	53991
	OHL input shaft	**(A)**	**(A)**	**(A)**	**(A)**	**(A)**	**(A)**	**(A)**	**(A)**	**(A)**	**(A)**	**(A)**	**(A)**	**(A)**	**(A)**	**(A)**	**(A)**	**(A)**	**(A)**
	OHL output shaft **(B)**	6777	**6777**	6777	6777	**6777**	6777	6777	**6777**	6777	6777	**6777**	6777	6777	**6777**	6777	6777	**6777**	6777

Service factor: 1.0

(A) (B) (C) - See footnotes page on inside back cover

Blank areas (-) indicate configuration not available

MSM 128

Size: MW1284

Four-stage reduction – Clamp collar, three-piece coupled, separate

NEMA motor frame		56C			—			140TC			180TC			—			210TC		
IEC motor frame		71D			80D			90D			100D			112D			132D		
Separate group		71			80			90			100			112			132		
Ratio	Output Rating data	3450	1750	1160	3450	1750	1160	3450	1750	1160	3450	1750	1160	3450	1750	1160	3450	1750	1160
	Output RPM	2.71	**1.37**	0.92	2.71	**1.37**	0.92	2.71	**1.37**	0.92	2.71	**1.37**	0.92	2.71	**1.37**	0.92	2.71	**1.37**	0.92
	Input Hp (max) **(C)**	2.32	**1.18**	0.79	2.32	**1.18**	0.79	2.32	**1.18**	0.79	2.32	**1.18**	0.79	2.32	**1.18**	0.79	2.32	**1.18**	0.79
1274.88	Output torque, in–lb	53991	**53991**	53991	53991	**53991**	53991	53991	**53991**	53991	53991	**53991**	53991	53991	**53991**	53991	53991	**53991**	53991
	OHL input shaft	**(A)**	**(A)**	**(A)**	**(A)**	**(A)**	**(A)**	**(A)**	**(A)**	**(A)**	**(A)**	**(A)**	**(A)**	**(A)**	**(A)**	**(A)**	**(A)**	**(A)**	**(A)**
	OHL output shaft **(B)**	6777	**6777**	6777	6777	**6777**	6777	6777	**6777**	6777	6777	**6777**	6777	6777	**6777**	6777	6777	**6777**	6777
	Output RPM	2.58	**1.31**	0.88	2.58	**1.31**	0.88	2.58	**1.31**	0.88	2.58	**1.31**	0.88	2.58	**1.31**	0.88	–	–	–
	Input Hp (max) **(C)**	2.21	**1.12**	0.75	2.21	**1.12**	0.75	2.21	**1.12**	0.75	2.21	**1.12**	0.75	2.21	**1.12**	0.75	–	–	–
1335.16	Output torque, in–lb	53991	**53991**	53991	53991	**53991**	53991	53991	**53991**	53991	53991	**53991**	53991	53991	**53991**	53991	–	–	–
	OHL input shaft	**(A)**	**(A)**	**(A)**	**(A)**	**(A)**	**(A)**	**(A)**	**(A)**	**(A)**	**(A)**	**(A)**	**(A)**	**(A)**	**(A)**	**(A)**	–	–	–
	OHL output shaft **(B)**	6777	**6777**	6777	6777	**6777**	6777	6777	**6777**	6777	6777	**6777**	6777	6777	**6777**	6777	–	–	–
	Output RPM	2.36	**1.20**	0.80	2.36	**1.20**	0.80	2.36	**1.20**	0.80	2.36	**1.20**	0.80	2.36	**1.20**	0.80	–	–	–
	Input Hp (max) **(C)**	2.02	**1.03**	0.69	2.02	**1.03**	0.69	2.02	**1.03**	0.69	2.02	**1.03**	0.69	2.02	**1.03**	0.69	–	–	–
1462.59	Output torque, in–lb	53991	**53991**	53991	53991	**53991**	53991	53991	**53991**	53991	53991	**53991**	53991	53991	**53991**	53991	–	–	–
	OHL input shaft	**(A)**	**(A)**	**(A)**	**(A)**	**(A)**	**(A)**	**(A)**	**(A)**	**(A)**	**(A)**	**(A)**	**(A)**	**(A)**	**(A)**	**(A)**	–	–	–
	OHL output shaft **(B)**	6777	**6777**	6777	6777	**6777**	6777	6777	**6777**	6777	6777	**6777**	6777	6777	**6777**	6777	–	–	–
	Output RPM	2.27	**1.15**	0.77	2.27	**1.15**	0.77	2.27	**1.15**	0.77	2.27	**1.15**	0.77	–	–	–	–	–	–
	Input Hp (max) **(C)**	1.94	**0.99**	0.66	1.94	**0.99**	0.66	1.94	**0.99**	0.66	1.94	**0.99**	0.66	–	–	–	–	–	–
1520.48	Output torque, in–lb	53991	**53991**	53991	53991	**53991**	53991	53991	**53991**	53991	53991	**53991**	53991	–	–	–	–	–	–
	OHL input shaft	**(A)**	**(A)**	**(A)**	**(A)**	**(A)**	**(A)**	**(A)**	**(A)**	**(A)**	**(A)**	**(A)**	**(A)**	–	–	–	–	–	–
	OHL output shaft **(B)**	6777	**6777**	6777	6777	**6777**	6777	6777	**6777**	6777	6777	**6777**	6777	–	–	–	–	–	–
	Output RPM	2.00	**1.01**	0.68	2.00	**1.01**	0.68	2.00	**1.01**	0.68	–	–	–	–	–	–	–	–	–
	Input Hp (max) **(C)**	1.71	**0.87**	0.58	1.71	**0.87**	0.58	1.71	**0.87**	0.58	–	–	–	–	–	–	–	–	–
1724.52	Output torque, in–lb	53991	**53991**	53991	53991	**53991**	53991	53991	**53991**	53991	–	–	–	–	–	–	–	–	–
	OHL input shaft	**(A)**	**(A)**	**(A)**	**(A)**	**(A)**	**(A)**	**(A)**	**(A)**	**(A)**	–	–	–	–	–	–	–	–	–
	OHL output shaft **(B)**	6777	**6777**	6777	6777	**6777**	6777	6777	**6777**	6777	–	–	–	–	–	–	–	–	–
	Output RPM	1.97	**1.00**	0.67	1.97	**1.00**	0.67	1.97	**1.00**	0.67	1.97	**1.00**	0.67	–	–	–	–	–	–
	Input Hp (max) **(C)**	1.69	**0.86**	0.57	1.69	**0.86**	0.57	1.69	**0.86**	0.57	1.69	**0.86**	0.57	–	–	–	–	–	–
1751.48	Output torque, in–lb	53991	**53991**	53991	53991	**53991**	53991	53991	**53991**	53991	53991	**53991**	53991	–	–	–	–	–	–
	OHL input shaft	(A)	(A)	(A)	(A)	(A)	**(A)**	**(A)**	**(A)**	**(A)**	**(A)**	**(A)**	**(A)**	–	–	–	–	–	–
	OHL output shaft **(B)**	6777	**6777**	6777	6777	**6777**	6777	6777	**6777**	6777	6777	**6777**	6777	–	–	–	–	–	–
	Output RPM	1.72	**0.87**	0.58	1.72	**0.87**	0.58	1.72	**0.87**	0.58	–	–	–	–	–	–	–	–	–
	Input Hp (max) **(C)**	1.48	**0.75**	0.50	1.48	**0.75**	0.50	1.48	**0.75**	0.50	–	–	–	–	–	–	–	–	–
2001.69	Output torque, in–lb	53991	**53991**	53991	53991	**53991**	53991	53991	**53991**	53991	–	–	–	–	–	–	–	–	–
	OHL input shaft	**(A)**	**(A)**	**(A)**	**(A)**	**(A)**	**(A)**	**(A)**	**(A)**	**(A)**	–	–	–	–	–	–	–	–	–
	OHL output shaft **(B)**	6777	**6777**	6777	6777	**6777**	6777	6777	**6777**	6777	–	–	–	–	–	–	–	–	–
	Output RPM	1.55	**0.79**	0.53	1.55	**0.79**	0.53	1.55	**0.79**	0.53	–	–	–	–	–	–	–	–	–
	Input Hp (max) **(C)**	1.33	**0.68**	0.45	1.33	**0.68**	0.45	1.33	**0.68**	0.45	–	–	–	–	–	–	–	–	–
2220.12	Output torque, in–lb	53991	**53991**	53991	53991	**53991**	53991	53991	**53991**	53991	–	–	–	–	–	–	–	–	–
	OHL input shaft	**(A)**	**(A)**	**(A)**	**(A)**	**(A)**	**(A)**	**(A)**	**(A)**	**(A)**	–	–	–	–	–	–	–	–	–
	OHL output shaft **(B)**	6777	**6777**	6777	6777	**6777**	6777	6777	**6777**	6777	–	–	–	–	–	–	–	–	–
	Output RPM	1.51	**0.76**	0.51	1.51	**0.76**	0.51	1.51	**0.76**	0.51	–	–	–	–	–	–	–	–	–
	Input Hp (max) **(C)**	1.29	**0.65**	0.44	1.29	**0.65**	0.44	1.29	**0.65**	0.44	–	–	–	–	–	–	–	–	–
2289.91	Output torque, in–lb	53991	**53991**	53991	53991	**53991**	53991	53991	**53991**	53991	–	–	–	–	–	–	–	–	–
	OHL input shaft	**(A)**	**(A)**	**(A)**	**(A)**	**(A)**	**(A)**	**(A)**	**(A)**	**(A)**	–	–	–	–	–	–	–	–	–
	OHL output shaft **(B)**	6777	**6777**	6777	6777	**6777**	6777	6777	**6777**	6777	–	–	–	–	–	–	–	–	–
	Output RPM	1.40	**0.71**	0.48	1.40	**0.71**	0.48	1.40	**0.71**	0.48	–	–	–	–	–	–	–	–	–
	Input Hp (max) **(C)**	1.20	**0.61**	0.41	1.20	**0.61**	0.41	1.20	**0.61**	0.41	–	–	–	–	–	–	–	–	–
2462.39	Output torque, in–lb	53991	**53991**	53991	53991	**53991**	53991	53991	**53991**	53991	–	–	–	–	–	–	–	–	–
	OHL input shaft	**(A)**	**(A)**	**(A)**	**(A)**	**(A)**	**(A)**	**(A)**	**(A)**	**(A)**	–	–	–	–	–	–	–	–	–
	OHL output shaft **(B)**	6777	**6777**	6777	6777	**6777**	6777	6777	**6777**	6777	–	–	–	–	–	–	–	–	–

Service factor: 1.0

(A) (B) (C) - See footnotes page on inside back cover

Blank areas (-) indicate configuration not available

MSM 128

Size: MW1285

Five-stage reduction – Clamp collar, three-piece coupled, separate

NEMA motor frame		56C			—			140TC			180TC			—			210TC		
IEC motor frame		71D			80D			90D			100D			112D			132D		
Separate group		71			80			90			100			112			132		
Ratio	Output Rating data	3450	1750	1160	3450	1750	1160	3450	1750	1160	3450	1750	1160	3450	1750	1160	3450	1750	1160
	Output RPM	1.38	**0.70**	0.47	1.38	**0.70**	0.47	1.38	**0.70**	0.47	1.38	**0.70**	0.47	1.38	**0.70**	0.47	–	–	–
	Input Hp (max) **(C)**	1.18	**0.60**	0.40	1.18	**0.60**	0.40	1.18	**0.60**	0.40	1.18	**0.60**	0.40	1.18	**0.60**	0.40	–	–	–
2494.22	Output torque, in–lb	53991	**53991**	53991	53991	**53991**	53991	53991	**53991**	53991	53991	**53991**	53991	53991	**53991**	53991	–	–	–
	OHL input shaft	**(A)**	**(A)**	**(A)**	**(A)**	**(A)**	**(A)**	**(A)**	**(A)**	**(A)**	**(A)**	**(A)**	**(A)**	**(A)**	**(A)**	**(A)**	–	–	–
	OHL output shaft **(B)**	6777	**6777**	6777	6777	**6777**	6777	6777	**6777**	6777	6777	**6777**	6777	6777	**6777**	6777	–	–	–
	Output RPM	1.18	**0.60**	0.40	1.18	**0.60**	0.40	1.18	**0.60**	0.40	1.18	**0.60**	0.40	1.18	**0.60**	0.40	–	–	–
	Input Hp (max) **(C)**	1.01	**0.51**	0.34	1.01	**0.51**	0.34	1.01	**0.51**	0.34	1.01	**0.51**	0.34	1.01	**0.51**	0.34	–	–	–
2915.15	Output torque, in–lb	53991	**53991**	53991	53991	**53991**	53991	53991	**53991**	53991	53991	**53991**	53991	53991	**53991**	53991	–	–	–
	OHL input shaft	**(A)**	**(A)**	**(A)**	**(A)**	**(A)**	**(A)**	**(A)**	**(A)**	**(A)**	**(A)**	**(A)**	**(A)**	**(A)**	**(A)**	**(A)**	–	–	–
	OHL output shaft **(B)**	6777	**6777**	6777	6777	**6777**	6777	6777	**6777**	6777	6777	**6777**	6777	6777	**6777**	6777	–	–	–
	Output RPM	1.05	**0.53**	0.35	1.05	**0.53**	0.35	1.05	**0.53**	0.35	1.05	**0.53**	0.35	1.05	**0.53**	0.35	–	–	–
	Input Hp (max) **(C)**	0.90	**0.45**	0.30	0.90	**0.45**	0.30	0.90	**0.45**	0.30	0.90	**0.45**	0.30	0.90	**0.45**	0.30	–	–	–
3297.82	Output torque, in–lb	53991	**53991**	53991	53991	**53991**	53991	53991	**53991**	53991	53991	**53991**	53991	53991	**53991**	53991	–	–	–
	OHL input shaft	**(A)**	**(A)**	**(A)**	**(A)**	**(A)**	**(A)**	**(A)**	**(A)**	**(A)**	**(A)**	**(A)**	**(A)**	**(A)**	**(A)**	**(A)**	–	–	–
	OHL output shaft **(B)**	6777	**6777**	6777	6777	**6777**	6777	6777	**6777**	6777	6777	**6777**	6777	6777	**6777**	6777	–	–	–
	Output RPM	0.89	**0.45**	0.30	0.89	**0.45**	0.30	0.89	**0.45**	0.30	0.89	**0.45**	0.30	0.89	**0.45**	0.30	–	–	–
	Input Hp (max) **(C)**	0.76	**0.39**	0.26	0.76	**0.39**	0.26	0.76	**0.39**	0.26	0.76	**0.39**	0.26	0.76	**0.39**	0.26	–	–	–
3868.84	Output torque, in–lb	53991	**53991**	53991	53991	**53991**	53991	53991	**53991**	53991	53991	**53991**	53991	53991	**53991**	53991	–	–	–
	OHL input shaft	**(A)**	**(A)**	**(A)**	**(A)**	**(A)**	**(A)**	**(A)**	**(A)**	**(A)**	**(A)**	**(A)**	**(A)**	**(A)**	**(A)**	**(A)**	–	–	–
	OHL output shaft **(B)**	6777	**6777**	6777	6777	**6777**	6777	6777	**6777**	6777	6777	**6777**	6777	6777	**6777**	6777	–	–	–
	Output RPM	0.81	**0.41**	0.27	0.81	**0.41**	0.27	0.81	**0.41**	0.27	0.81	**0.41**	0.27	–	–	–	–	–	–
	Input Hp (max) **(C)**	0.69	**0.35**	0.24	0.69	**0.35**	0.24	0.69	**0.35**	0.24	0.69	**0.35**	0.24	–	–	–	–	–	–
4260.34	Output torque, in–lb	53991	**53991**	53991	53991	**53991**	53991	53991	**53991**	53991	53991	**53991**	53991	–	–	–	–	–	–
	OHL input shaft	**(A)**	**(A)**	**(A)**	**(A)**	**(A)**	**(A)**	**(A)**	**(A)**	**(A)**	**(A)**	**(A)**	**(A)**	–	–	–	–	–	–
	OHL output shaft **(B)**	6777	**6777**	6777	6777	**6777**	6777	6777	**6777**	6777	6777	**6777**	6777	–	–	–	–	–	–
	Output RPM	0.78	**0.39**	0.26	0.78	**0.39**	0.26	0.78	**0.39**	0.26	0.78	**0.39**	0.26	–	–	–	–	–	–
	Input Hp (max) **(C)**	0.67	**0.34**	0.23	0.67	**0.34**	0.23	0.67	**0.34**	0.23	0.67	**0.34**	0.23	–	–	–	–	–	–
4433.15	Output torque, in–lb	53991	**53991**	53991	53991	**53991**	53991	53991	**53991**	53991	53991	**53991**	53991	–	–	–	–	–	–
	OHL input shaft	**(A)**	**(A)**	**(A)**	**(A)**	**(A)**	**(A)**	**(A)**	**(A)**	**(A)**	**(A)**	**(A)**	**(A)**	–	–	–	–	–	–
	OHL output shaft **(B)**	6777	**6777**	6777	6777	**6777**	6777	6777	**6777**	6777	6777	**6777**	6777	–	–	–	–	–	–
	Output RPM	0.70	**0.35**	0.24	0.70	**0.35**	0.24	0.70	**0.35**	0.24	0.70	**0.35**	0.24	–	–	–	–	–	–
	Input Hp (max) **(C)**	0.60	**0.30**	0.20	0.60	**0.30**	0.20	0.60	**0.30**	0.20	0.60	**0.30**	0.20	–	–	–	–	–	–
4954.49	Output torque, in–lb	53991	**53991**	53991	53991	**53991**	53991	53991	**53991**	53991	53991	**53991**	53991	–	–	–	–	–	–
	OHL input shaft	**(A)**	**(A)**	**(A)**	**(A)**	**(A)**	**(A)**	**(A)**	**(A)**	**(A)**	**(A)**	**(A)**	**(A)**	–	–	–	–	–	–
	OHL output shaft **(B)**	6777	**6777**	6777	6777	**6777**	6777	6777	**6777**	6777	6777	**6777**	6777	–	–	–	–	–	–
	Output RPM	0.63	**0.32**	0.21	0.63	**0.32**	0.21	0.63	**0.32**	0.21	0.63	**0.32**	0.21	–	–	–	–	–	–
	Input Hp (max) **(C)**	0.54	**0.27**	0.18	0.54	**0.27**	0.18	0.54	**0.27**	0.18	0.54	**0.27**	0.18	–	–	–	–	–	–
5476.83	Output torque, in–lb	53991	**53991**	53991	53991	**53991**	53991	53991	**53991**	53991	53991	**53991**	53991	–	–	–	–	–	–
	OHL input shaft	**(A)**	**(A)**	**(A)**	**(A)**	**(A)**	**(A)**	**(A)**	**(A)**	**(A)**	**(A)**	**(A)**	**(A)**	–	–	–	–	–	–
	OHL output shaft **(B)**	6777	**6777**	6777	6777	**6777**	6777	6777	**6777**	6777	6777	**6777**	6777	–	–	–	–	–	–
	Output RPM	0.61	**0.31**	0.21	0.61	**0.31**	0.21	0.61	**0.31**	0.21	0.61	**0.31**	0.21	–	–	–	–	–	–
	Input Hp (max) **(C)**	0.52	**0.26**	0.18	0.52	**0.26**	0.18	0.52	**0.26**	0.18	0.52	**0.26**	0.18	–	–	–	–	–	–
5690.15	Output torque, in–lb	53991	**53991**	53991	53991	**53991**	53991	53991	**53991**	53991	53991	**53991**	53991	–	–	–	–	–	–
	OHL input shaft	**(A)**	**(A)**	**(A)**	**(A)**	**(A)**	**(A)**	**(A)**	**(A)**	**(A)**	**(A)**	**(A)**	**(A)**	–	–	–	–	–	–
	OHL output shaft **(B)**	6777	**6777**	6777	6777	**6777**	6777	6777	**6777**	6777	6777	**6777**	6777	–	–	–	–	–	–
	Output RPM	0.54	**0.27**	0.18	0.54	**0.27**	0.18	0.54	**0.27**	0.18	–	–	–	–	–	–	–	–	–
	Input Hp (max) **(C)**	0.46	**0.24**	0.16	0.46	**0.24**	0.16	0.46	**0.24**	0.16	–	–	–	–	–	–	–	–	–
6364.36	Output torque, in–lb	53991	**53991**	53991	53991	**53991**	53991	53991	**53991**	53991	–	–	–	–	–	–	–	–	–
	OHL input shaft	**(A)**	**(A)**	**(A)**	**(A)**	**(A)**	**(A)**	**(A)**	**(A)**	**(A)**	–	–	–	–	–	–	–	–	–
	OHL output shaft **(B)**	6777	**6777**	6777	6777	**6777**	6777	6777	**6777**	6777	–	–	–	–	–	–	–	–	–
	Output RPM	0.49	**0.25**	0.17	0.49	**0.25**	0.17	0.49	**0.25**	0.17	–	–	–	–	–	–	–	–	–
	Input Hp (max) **(C)**	0.42	**0.21**	0.14	0.42	**0.21**	0.14	0.42	**0.21**	0.14	–	–	–	–	–	–	–	–	–
6999.87	Output torque, in–lb	53991	**53991**	53991	53991	**53991**	53991	53991	**53991**	53991	–	–	–	–	–	–	–	–	–
	OHL input shaft	**(A)**	**(A)**	**(A)**	**(A)**	**(A)**	**(A)**	**(A)**	**(A)**	**(A)**	–	–	–	–	–	–	–	–	–
	OHL output shaft **(B)**	6777	**6777**	6777	6777	**6777**	6777	6777	**6777**	6777	–	–	–	–	–	–	–	–	–

Service factor: 1.0

(A) (B) (C) - See footnotes page on inside back cover

Blank areas (-) indicate configuration not available

MSM 148

Size: MW1482

Double reduction – Clamp collar, three-piece coupled, separate

NEMA motor frame		210TC			250TC			280TC			320TC			360TC		
IEC motor frame		132D			160D			180D / 200D			225D			250D		
Separate group		132			160			180			225			250		
Ratio	Output Rating data	3450	1750	1160	3450	1750	1160	3450	1750	1160	3450	1750	1160	3450	1750	1160
	Output RPM	–	–	–	457	**232**	154	457	**232**	154	457	**232**	154	457	**232**	154
	Input Hp (max) **(C)**	–	–	–	89.63	**45.47**	30.14	182.55	**92.60**	61.38	269.08	**137.50**	75.24	265.03	**144.74**	99.71
7.54	Output torque, in–lb	–	–	–	12353	**12353**	12353	25159	**25159**	25159	37083	**37358**	30838	36526	**39324**	40871
	OHL input shaft	–	–	–	**(A)**	**1524**	1586	**(A)**	**1745**	2102	**(A)**	**2182**	2284	**(A)**	**2111**	2528
	OHL output shaft **(B)**	–	–	–	**(A)**	**9664**	10832	**(A)**	**9664**	10832	**(A)**	**9664**	10832	**(A)**	**9664**	10832
	Output RPM	–	–	–	350	**178**	118	350	**178**	118	350	**178**	118	350	**178**	118
	Input Hp (max) **(C)**	–	–	–	89.63	**45.47**	30.14	182.55	**92.60**	61.38	233.86	**127.72**	72.64	230.15	**125.71**	86.62
9.86	Output torque, in–lb	–	–	–	16140	**16140**	16140	32873	**32873**	32873	42111	**45340**	38905	41443	**44625**	46391
	OHL input shaft	–	–	–	**(A)**	**1490**	1585	**(A)**	**1640**	1994	**(A)**	**2124**	2272	**(A)**	**2108**	2523
	OHL output shaft **(B)**	–	–	–	**(A)**	**9664**	10832	**(A)**	**9664**	10832	**(A)**	**9664**	10832	**(A)**	**9664**	10832
	Output RPM	297	**151**	100	297	**151**	100	297	**151**	100	297	**151**	100	297	**151**	100
	Input Hp (max) **(C)**	64.54	**32.62**	18.18	89.63	**45.47**	30.14	182.55	**92.60**	60.02	212.55	**116.11**	70.25	209.08	**114.22**	78.70
11.61	Output torque, in–lb	13689	**13640**	11469	19010	**19010**	19010	38717	**38717**	37861	45078	**48545**	44310	44344	**47765**	49640
	OHL input shaft	**(A)**	**949**	992	**(A)**	**1451**	1580	**(A)**	**1546**	1933	**(A)**	**2081**	2286	**(A)**	**2069**	2520
	OHL output shaft **(B)**	**(A)**	**10832**	11478	**(A)**	**10832**	11478	**(A)**	**10832**	11478	**(A)**	**10832**	11478	**(A)**	**10832**	11478
	Output RPM	259	**131**	87	259	**131**	87	259	**131**	87	259	**131**	87	259	**131**	87
	Input Hp (max) **(C)**	64.54	**31.72**	17.67	89.63	**45.47**	30.14	181.39	**92.60**	58.10	195.15	**106.60**	67.90	191.91	**104.84**	72.23
13.32	Output torque, in–lb	15700	**15212**	12787	21804	**21804**	21804	44124	**44407**	42034	47470	**51121**	49124	46684	**50276**	52258
	OHL input shaft	**(A)**	**946**	992	**(A)**	**1415**	1585	**(A)**	**1309**	1884	**(A)**	**2048**	2284	**(A)**	**2037**	2515
	OHL output shaft **(B)**	**(A)**	**10832**	11478	**(A)**	**10832**	11478	**(A)**	**10832**	11478	**(A)**	**10832**	11478	**(A)**	**10832**	11478
	Output RPM	235	**119**	79	235	**119**	79	235	**119**	79	235	**119**	79	235	**119**	79
	Input Hp (max) **(C)**	64.54	**30.96**	17.25	89.63	**45.47**	30.14	170.81	**92.60**	56.53	183.16	**100.04**	66.02	180.08	**98.38**	67.79
14.68	Output torque, in–lb	17304	**16363**	13757	24031	**24031**	24031	45795	**48944**	45073	49105	**52878**	52645	48280	**51997**	54052
	OHL input shaft	**(A)**	**944**	992	**(A)**	**1384**	1584	**(A)**	**1123**	1849	**(A)**	**2027**	2278	**(A)**	**2016**	2514
	OHL output shaft **(B)**	9664	**10832**	11478	9664	**10832**	11478	9664	**10832**	11478	9664	**10832**	11478	9664	**10832**	11478
	Output RPM	199	**101**	67	199	**101**	67	199	**101**	67	199	**101**	67	199	**101**	67
	Input Hp (max) **(C)**	64.54	**29.43**	16.40	89.63	**45.47**	29.37	153.46	**91.16**	53.57	163.28	**89.21**	61.24	160.51	**87.69**	60.43
17.35	Output torque, in–lb	20462	**18393**	15464	28417	**28417**	27688	48654	**56976**	50511	51766	**55757**	57746	50888	**54804**	56979
	OHL input shaft	**(A)**	**951**	993	**(A)**	**1325**	1588	**(A)**	**810**	1788	**(A)**	**1990**	2291	**(A)**	**1980**	2510
	OHL output shaft **(B)**	9664	**10832**	11478	9664	**10832**	11478	9664	**10832**	11478	9664	**10832**	11478	9664	**10832**	11478
	Output RPM	174	**88**	59	174	**88**	59	174	**88**	59	174	**88**	59	174	**88**	59
	Input Hp (max) **(C)**	64.54	**28.07**	15.65	89.63	**45.47**	27.90	139.12	**81.47**	51.29	148.67	**81.21**	54.78	146.10	**79.81**	54.77
19.78	Output torque, in–lb	23322	**19998**	16815	32388	**32388**	29982	50270	**58038**	55118	53721	**57853**	58867	52791	**56852**	58865
	OHL input shaft	**(A)**	**951**	993	**(A)**	**1235**	1589	**(A)**	**843**	1628	**(A)**	**1967**	2276	**(A)**	**1958**	2510
	OHL output shaft **(B)**	9664	**11478**	11478	9664	**11478**	11478	9664	**11478**	11478	9664	**11478**	11478	9664	**11478**	11478
	Output RPM	152	**77**	51	152	**77**	51	152	**77**	51	152	**77**	51	152	**77**	51
	Input Hp (max) **(C)**	63.37	**26.49**	14.76	89.63	**45.47**	26.27	123.94	**72.24**	48.56	133.10	**72.24**	48.56	131.60	**71.89**	48.56
22.74	Output torque, in–lb	26329	**21701**	18244	37243	**37243**	32466	51496	**59173**	60008	55303	**59173**	60008	54681	**58883**	60006
	OHL input shaft	**(A)**	**948**	993	**(A)**	**1029**	1566	**(A)**	**870**	1465	**(A)**	**1941**	2282	**(A)**	**1936**	2527
	OHL output shaft **(B)**	9664	**11478**	11478	9664	**11478**	11478	9664	**11478**	11478	9664	**11478**	11478	9664	**11478**	11478
	Output RPM	133	**67**	45	133	**67**	45	133	**67**	45	133	**67**	45	133	**67**	45
	Input Hp (max) **(C)**	56.81	**24.91**	13.88	81.28	**45.02**	24.78	110.56	**64.28**	43.22	118.50	**64.28**	43.22	118.50	**64.28**	43.22
26.00	Output torque, in–lb	26984	**23326**	19611	38605	**42154**	35002	52515	**60187**	61057	56284	**60187**	61057	56284	**60187**	61055
	OHL input shaft	**(A)**	**946**	992	**(A)**	**828**	1538	**(A)**	**889**	1485	**(A)**	**1969**	2286	**(A)**	**1917**	2539
	OHL output shaft **(B)**	10832	**11478**	11478	10832	**11478**	11478	10832	**11478**	11478	10832	**11478**	11478	10832	**11478**	11478
	Output RPM	130	**66**	44	130	**66**	44	130	**66**	44	130	**66**	44	130	**66**	44
	Input Hp (max) **(C)**	64.54	**32.74**	19.88	89.63	**45.47**	30.14	113.66	**74.17**	49.16	113.66	**74.17**	49.16	113.66	**74.17**	49.16
26.51	Output torque, in–lb	31257	**31257**	28635	43408	**43408**	43408	55043	**70808**	70808	55043	**70808**	70808	55043	**70808**	70806
	OHL input shaft	**(A)**	**944**	990	**(A)**	**1308**	1587	**(A)**	**1379**	1869	**(A)**	**2199**	2293	**(A)**	**2270**	2723
	OHL output shaft **(B)**	10832	**11478**	11478	10832	**11478**	11478	10832	**11478**	11478	10832	**11478**	11478	10832	**11478**	11478
	Output RPM	114	**58**	38	114	**58**	38	114	**58**	38	114	**58**	38	114	**58**	38
	Input Hp (max) **(C)**	64.54	**32.74**	19.41	89.33	**45.47**	30.14	111.96	**64.69**	42.88	111.96	**64.69**	42.88	111.96	**64.69**	42.88
30.39	Output torque, in–lb	35836	**35836**	32057	49598	**49766**	49766	62164	**70808**	70808	62164	**70808**	70808	62164	**70808**	70806
	OHL input shaft	**(A)**	**950**	987	**(A)**	**1218**	1542	**(A)**	**1462**	1904	**(A)**	**2204**	2297	**(A)**	**2302**	2757
	OHL output shaft **(B)**	10832	**11478**	11478	10832	**11478**	11478	10832	**11478**	11478	10832	**11478**	11478	10832	**11478**	11478

Service factor: 1.0

(A) (B) (C) - See footnotes page on inside back cover

Blank areas (-) indicate configuration not available

MSM 148

Size: MW1482

Double reduction – Clamp collar, three-piece coupled, separate

NEMA motor frame		210TC			250TC			280TC			320TC			360TC		
IEC motor frame		132D			160D			180D / 200D			225D			250D		
Separate group		132			160			180			225			250		
Ratio	Output Rating data	3450	1750	1160	3450	1750	1160	3450	1750	1160	3450	1750	1160	3450	1750	1160
	Output RPM	98	**50**	33	98	**50**	33	98	**50**	33	98	**50**	33	98	**50**	33
	Input Hp (max) **(C)**	63.45	**32.74**	19.09	79.37	**45.47**	30.14	95.52	**55.95**	37.09	95.52	**55.95**	37.09	95.52	**55.95**	37.09
35.14	Output torque, in–lb	40730	**41432**	36447	50951	**57538**	57538	61317	**70808**	70808	61317	**70808**	70808	61317	**70808**	70806
	OHL input shaft	**(A)**	**951**	992	**(A)**	**1008**	1481	**(A)**	**1539**	1937	**(A)**	**2207**	2279	**(A)**	**2330**	2775
	OHL output shaft **(B)**	11478	**11478**	11478	11478	**11478**	11478	11478	**11478**	11478	11478	**11478**	11478	11478	**11478**	11478
	Output RPM	95	**48**	32	95	**48**	32	95	**48**	32	95	**48**	32	–	–	–
	Input Hp (max) **(C)**	61.61	**32.74**	18.53	76.98	**45.47**	30.14	100.03	**53.91**	35.73	100.03	**53.91**	35.73	–	–	–
36.47	Output torque, in–lb	41048	**43003**	36723	51288	**59720**	59720	66647	**70808**	70808	66647	**70808**	70808	–	–	–
	OHL input shaft	**(A)**	**879**	992	**(A)**	**948**	**(A)**	**(A)**	**1559**	1946	**(A)**	**2207**	2281	–	–	–
	OHL output shaft **(B)**	11478	**11478**	11478	11478	**11478**	11478	11478	**11478**	11478	11478	**11478**	11478	–	–	–
	Output RPM	85	**43**	29	85	**43**	29	85	**43**	29	85	**43**	29	–	–	–
	Input Hp (max) **(C)**	56.79	**32.46**	18.09	70.74	**43.37**	30.14	87.52	**48.72**	32.29	87.52	**48.72**	32.29	–	–	–
40.36	Output torque, in–lb	41869	**47182**	39662	52152	**63040**	63040	64521	**70808**	70808	64521	**70808**	70808	–	–	–
	OHL input shaft	**(A)**	**569**	992	**(A)**	**880**	**(A)**	**(A)**	**1606**	1965	**(A)**	**2208**	2287	–	–	–
	OHL output shaft **(B)**	11478	**11478**	11478	11478	**11478**	11478	11478	**11478**	11478	11478	**11478**	11478	–	–	–
	Output RPM	73	**37**	25	73	**37**	25	73	**37**	25	73	**37**	25	–	–	–
	Input Hp (max) **(C)**	49.91	**28.82**	17.39	61.87	**38.47**	27.59	82.06	**41.63**	27.59	82.06	**41.63**	27.59	–	–	–
47.23	Output torque, in–lb	43064	**49030**	44632	53386	**65435**	70808	70808	**70808**	70808	70808	**70808**	70808	–	–	–
	OHL input shaft	**(A)**	**524**	989	**(A)**	**862**	**(A)**	**(A)**	**1633**	1991	**(A)**	**2190**	2285	–	–	–
	OHL output shaft **(B)**	11478	**11478**	11478	11478	**11478**	11478	11478	**11478**	11478	11478	**11478**	11478	–	–	–
	Output RPM	67	**34**	23	67	**34**	23	67	**34**	23	67	**34**	23	–	–	–
	Input Hp (max) **(C)**	46.67	**27.05**	16.66	57.75	**36.13**	25.48	75.16	**38.44**	25.48	75.16	**38.44**	25.48	–	–	–
51.15	Output torque, in–lb	43609	**49839**	46304	53962	**66561**	70808	70231	**70808**	70808	70231	**70808**	70808	–	–	–
	OHL input shaft	**(A)**	**508**	988	**(A)**	**851**	**(A)**	**(A)**	**1644**	2001	**(A)**	**2195**	2289	–	–	–
	OHL output shaft **(B)**	11478	**11478**	11478	11478	**11478**	11478	11478	**11478**	11478	11478	**11478**	11478	–	–	–
	Output RPM	60	**31**	20	60	**31**	20	60	**31**	20	–	–	–	–	–	–
	Input Hp (max) **(C)**	42.51	**24.76**	15.79	67.89	**33.08**	22.83	67.89	**34.44**	22.83	–	–	–	–	–	–
57.09	Output torque, in–lb	44336	**50900**	48976	70808	**68018**	70808	70808	**70808**	70808	–	–	–	–	–	–
	OHL input shaft	**(A)**	**484**	986	**(A)**	**842**	**(A)**	**(A)**	**1660**	2016	–	–	–	–	–	–
	OHL output shaft **(B)**	11478	**11478**	11478	11478	**11478**	11478	11478	**11478**	11478	–	–	–	–	–	–
	Output RPM	57	**29**	19	57	**29**	19	57	**29**	19	–	–	–	–	–	–
	Input Hp (max) **(C)**	40.43	**23.59**	15.54	64.04	**31.54**	21.53	64.04	**32.48**	21.53	–	–	–	–	–	–
60.53	Output torque, in–lb	44699	**51431**	51107	70808	**68755**	70808	70808	**70808**	70808	–	–	–	–	–	–
	OHL input shaft	**(A)**	**475**	991	**(A)**	**836**	**(A)**	**(A)**	**1667**	2024	–	–	–	–	–	–
	OHL output shaft **(B)**	11478	**11478**	11478	11478	**11478**	11478	11478	**11478**	11478	–	–	–	–	–	–
	Output RPM	50	**26**	17	50	**26**	17	–	–	–	–	–	–	–	–	–
	Input Hp (max) **(C)**	36.22	**21.24**	14.61	56.49	**28.42**	18.99	–	–	–	–	–	–	–	–	–
68.61	Output torque, in–lb	45399	**52492**	54483	70808	**70228**	70808	–	–	–	–	–	–	–	–	–
	OHL input shaft	**(A)**	**455**	989	**(A)**	**825**	**(A)**	–	–	–	–	–	–	–	–	–
	OHL output shaft **(B)**	11478	**11478**	11478	11478	**11478**	11478	–	–	–	–	–	–	–	–	–
	Output RPM	47	**24**	16	47	**24**	16	–	–	–	–	–	–	–	–	–
	Input Hp (max) **(C)**	34.12	**20.06**	13.80	52.80	**26.78**	17.75	–	–	–	–	–	–	–	–	–
73.42	Output torque, in–lb	45760	**53027**	55031	70808	**70808**	70808	–	–	–	–	–	–	–	–	–
	OHL input shaft	**(A)**	**442**	990	**(A)**	**824**	**(A)**	–	–	–	–	–	–	–	–	–
	OHL output shaft **(B)**	11478	**11478**	11478	11478	**11478**	11478	–	–	–	–	–	–	–	–	–
	Output RPM	45	**23**	15	–	–	–	–	–	–	–	–	–	–	–	–
	Input Hp (max) **(C)**	32.63	**19.21**	13.22	–	–	–	–	–	–	–	–	–	–	–	–
77.21	Output torque, in–lb	46028	**53415**	55445	–	–	–	–	–	–	–	–	–	–	–	–
	OHL input shaft	**(A)**	**437**	990	–	–	–	–	–	–	–	–	–	–	–	–
	OHL output shaft **(B)**	11478	**11478**	11478	–	–	–	–	–	–	–	–	–	–	–	–
	Output RPM	41	**21**	14	–	–	–	–	–	–	–	–	–	–	–	–
	Input Hp (max) **(C)**	30.48	**17.98**	12.37	–	–	–	–	–	–	–	–	–	–	–	–
83.32	Output torque, in–lb	46399	**53965**	56009	–	–	–	–	–	–	–	–	–	–	–	–
	OHL input shaft	**(A)**	**427**	987	–	–	–	–	–	–	–	–	–	–	–	–
	OHL output shaft **(B)**	11478	**11478**	11478	–	–	–	–	–	–	–	–	–	–	–	–

Service factor: 1.0

(A) (B) (C) - See footnotes page on inside back cover

Blank areas (-) indicate configuration not available

MSM 148

Size: MW1483

Triple reduction – Clamp collar, three-piece coupled, separate

NEMA motor frame		180TC			—			210TC			250TC			280TC			320TC		
IEC motor frame		100D			112D			132D			160D			180D/ 200D			225D		
Separate group		100			112			132			160			180			225		
Ratio	Output Rating data	3450	1750	1160	3450	1750	1160	3450	1750	1160	3450	1750	1160	3450	1750	1160	3450	1750	1160
	Output RPM	–	–	–	–	–	–	–	–	–	118	**60**	40	118	**60**	40	118	**60**	40
	Input Hp (max) **(C)**	–	–	–	–	–	–	–	–	–	89.63	**45.47**	30.14	96.45	**66.24**	46.77	96.45	**66.24**	46.77
29.33	Output torque, in–lb	–	–	–	–	–	–	–	–	–	48018	**48018**	48018	51667	**69959**	74516	51667	**69959**	74516
	OHL input shaft	–	–	–	–	–	–	–	–	–	**(A)**	**1328**	1382	**(A)**	**1937**	2262	**(A)**	**2204**	2296
	OHL output shaft **(B)**	–	–	–	–	–	–	–	–	–	10832	**11478**	11478	10832	**11478**	11478	10832	**11478**	11478
	Output RPM	–	–	–	–	–	–	–	–	–	88	**45**	30	88	**45**	30	88	**45**	30
	Input Hp (max) **(C)**	–	–	–	–	–	–	–	–	–	81.75	**45.47**	30.14	81.75	**54.80**	36.32	81.75	**54.80**	36.32
39.02	Output torque, in–lb	–	–	–	–	–	–	–	–	–	58268	**63889**	63889	58268	**77004**	77004	58268	**77004**	77004
	OHL input shaft	–	–	–	–	–	–	–	–	–	**(A)**	**1326**	1381	**(A)**	**1959**	2315	**(A)**	**2207**	2299
	OHL output shaft **(B)**	–	–	–	–	–	–	–	–	–	11478	**11478**	11478	11478	**11478**	11478	11478	**11478**	11478
	Output RPM	–	–	–	–	–	–	76	**39**	26	76	**39**	26	76	**39**	26	76	**39**	26
	Input Hp (max) **(C)**	–	–	–	–	–	–	64.54	**32.74**	18.27	74.87	**45.47**	30.14	74.87	**47.33**	31.37	74.87	**47.33**	31.37
45.18	Output torque, in–lb	–	–	–	–	–	–	53269	**53269**	44842	61796	**73977**	73977	61796	**77004**	77004	61796	**77004**	77004
	OHL input shaft	–	–	–	–	–	–	**(A)**	**948**	992	**(A)**	**1324**	1380	**(A)**	**1988**	2344	**(A)**	**2187**	2280
	OHL output shaft **(B)**	–	–	–	–	–	–	11478	**11478**	11478	11478	**11478**	11478	11478	**11478**	11478	11478	**11478**	11478
	Output RPM	–	–	–	–	–	–	65	**33**	22	65	**33**	22	65	**33**	22	65	**33**	22
	Input Hp (max) **(C)**	–	–	–	–	–	–	64.54	**31.67**	17.65	67.66	**40.09**	26.57	67.66	**40.09**	26.57	67.66	**40.09**	26.57
53.34	Output torque, in–lb	–	–	–	–	–	–	62891	**60842**	51157	65926	**77004**	77004	65926	**77004**	77004	65926	**77004**	77004
	OHL input shaft	–	–	–	–	–	–	**(A)**	**946**	992	**(A)**	**1328**	1383	**(A)**	**2015**	2371	**(A)**	**2197**	2290
	OHL output shaft **(B)**	–	–	–	–	–	–	11478	**11478**	11478	11478	**11478**	11478	11478	**11478**	11478	11478	**11478**	11478
	Output RPM	–	–	–	58	**29**	19	58	**29**	19	58	**29**	19	58	**29**	19	–	–	–
	Input Hp (max) **(C)**	–	–	–	27.34	**13.87**	9.19	63.22	**30.82**	17.17	63.22	**35.90**	23.80	63.22	**35.90**	23.80	–	–	–
59.55	Output torque, in–lb	–	–	–	29744	**29744**	29744	68783	**66102**	55571	68783	**77004**	77004	68783	**77004**	77004	–	–	–
	OHL input shaft	–	–	–	**(A)**	**843**	870	**(A)**	**944**	993	**(A)**	**1330**	1385	**(A)**	**2030**	2387	–	–	–
	OHL output shaft **(B)**	–	–	–	11478	**11478**	11478	11478	**11478**	11478	11478	**11478**	11478	11478	**11478**	11478	–	–	–
	Output RPM	–	–	–	50	**25**	17	50	**25**	17	50	**25**	17	50	**25**	17	–	–	–
	Input Hp (max) **(C)**	–	–	–	27.34	**13.87**	9.19	57.37	**29.48**	16.43	57.37	**30.73**	20.37	57.37	**30.73**	20.37	–	–	–
69.59	Output torque, in–lb	–	–	–	34756	**34756**	34756	72937	**73883**	62122	72937	**77004**	77004	72937	**77004**	77004	–	–	–
	OHL input shaft	–	–	–	**(A)**	**843**	877	**(A)**	**951**	993	**(A)**	**1332**	1387	**(A)**	**2052**	2409	–	–	–
	OHL output shaft **(B)**	–	–	–	11478	**11478**	11478	11478	**11478**	11478	11478	**11478**	11478	11478	**11478**	11478	–	–	–
	Output RPM	–	–	–	43	**22**	15	43	**22**	15	43	**22**	15	43	**22**	15	–	–	–
	Input Hp (max) **(C)**	–	–	–	27.34	**13.87**	9.19	52.63	**26.80**	15.67	52.63	**26.80**	17.76	52.63	**26.80**	17.76	–	–	–
79.78	Output torque, in–lb	–	–	–	39847	**39847**	39847	76712	**77004**	67912	76712	**77004**	77004	76712	**77004**	77004	–	–	–
	OHL input shaft	–	–	–	**(A)**	**842**	877	**(A)**	**953**	993	**(A)**	**1333**	1388	**(A)**	**2067**	2423	–	–	–
	OHL output shaft **(B)**	–	–	–	11478	**11478**	11478	11478	**11478**	11478	11478	**11478**	11478	11478	**11478**	11478	–	–	–
	Output RPM	–	–	–	37	**19**	13	37	**19**	13	37	**19**	13	37	**19**	13	–	–	–
	Input Hp (max) **(C)**	–	–	–	27.34	**13.87**	9.19	45.70	**23.18**	14.78	45.70	**23.18**	15.37	45.70	**23.18**	15.37	–	–	–
92.24	Output torque, in–lb	–	–	–	46069	**46069**	46069	77004	**77004**	74049	77004	**77004**	77004	77004	**77004**	77004	–	–	–
	OHL input shaft	–	–	–	**(A)**	**840**	875	**(A)**	**950**	992	**(A)**	**1334**	1389	**(A)**	**2080**	2436	–	–	–
	OHL output shaft **(B)**	–	–	–	11478	**11478**	11478	11478	**11478**	11478	11478	**11478**	11478	11478	**11478**	11478	–	–	–
	Output RPM	36	**18**	12	36	**18**	12	36	**18**	12	36	**18**	12	36	**18**	12	–	–	–
	Input Hp (max) **(C)**	20.42	**10.36**	6.87	27.34	**13.87**	9.19	44.03	**22.33**	14.53	44.03	**22.33**	14.80	44.03	**22.33**	14.80	–	–	–
95.74	Output torque, in–lb	35711	**35711**	35711	47816	**47816**	47816	77004	**77004**	75554	77004	**77004**	77004	77004	**77004**	77004	–	–	–
	OHL input shaft	**(A)**	**708**	738	**(A)**	**839**	874	**(A)**	**951**	992	**(A)**	**1334**	1376	**(A)**	**2084**	2439	–	–	–
	OHL output shaft **(B)**	11478	**11478**	11478	11478	**11478**	11478	11478	**11478**	11478	11478	**11478**	11478	11478	**11478**	11478	–	–	–
	Output RPM	33	**17**	11	33	**17**	11	33	**17**	11	33	**17**	11	33	**17**	11	–	–	–
	Input Hp (max) **(C)**	20.42	**10.36**	6.87	27.34	**13.87**	9.07	39.79	**20.18**	13.38	39.79	**20.18**	13.38	39.79	**20.18**	13.38	–	–	–
105.94	Output torque, in–lb	39515	**39515**	39515	52910	**52910**	52187	77004	**77004**	77004	77004	**77004**	77004	77004	**77004**	77004	–	–	–
	OHL input shaft	**(A)**	**711**	735	**(A)**	**835**	872	**(A)**	**954**	993	**(A)**	**1324**	1379	**(A)**	**2091**	2447	–	–	–
	OHL output shaft **(B)**	11478	**11478**	11478	11478	**11478**	11478	11478	**11478**	11478	11478	**11478**	11478	11478	**11478**	11478	–	–	–
	Output RPM	28	**14**	9	28	**14**	9	28	**14**	9	28	**14**	9	–	–	–	–	–	–
	Input Hp (max) **(C)**	20.42	**10.36**	6.83	27.34	**13.87**	8.46	34.00	**17.25**	11.43	34.00	**17.25**	11.43	–	–	–	–	–	–
123.98	Output torque, in–lb	46247	**46247**	46003	61924	**61924**	56998	77004	**77004**	77004	77004	**77004**	77004	–	–	–	–	–	–
	OHL input shaft	**(A)**	**712**	736	**(A)**	**825**	870	**(A)**	**956**	996	**(A)**	**1324**	1379	–	–	–	–	–	–
	OHL output shaft **(B)**	11478	**11478**	11478	11478	**11478**	11478	11478	**11478**	11478	11478	**11478**	11478	–	–	–	–	–	–

Service factor: 1.0

(A) (B) (C) - See footnotes page on inside back cover

Blank areas (-) indicate configuration not available

MSM 148

Size: MW1483

Triple reduction – Clamp collar, three-piece coupled, separate

NEMA motor frame		180TC			—			210TC			250TC			280TC			320TC		
IEC motor frame		100D			112D			132D			160D			180D/ 200D			225D		
Separate group		100			112			132			160			180			225		
Ratio	Output Rating data	3450	1750	1160	3450	1750	1160	3450	1750	1160	3450	1750	1160	3450	1750	1160	3450	1750	1160
	Output RPM	26	**13**	9	26	**13**	9	26	**13**	9	26	**13**	9	–	–	–	–	–	–
	Input Hp (max) **(C)**	20.42	**10.36**	6.59	27.34	**13.87**	8.15	31.39	**15.92**	10.56	31.39	**15.92**	10.56	–	–	–	–	–	–
134.28	Output torque, in–lb	50086	**50086**	48071	67064	**67064**	59452	77004	**77004**	77004	77004	**77004**	77004	–	–	–	–	–	–
	OHL input shaft	**(A)**	**711**	735	**(A)**	**697**	870	**(A)**	**957**	996	**(A)**	**1326**	1382	–	–	–	–	–	–
	OHL output shaft **(B)**	11478	**11478**	11478	11478	**11478**	11478	11478	**11478**	11478	11478	**11478**	11478	–	–	–	–	–	–
	Output RPM	23	**12**	8	23	**12**	8	23	**12**	8	23	**12**	8	–	–	–	–	–	–
	Input Hp (max) **(C)**	19.33	**10.36**	6.25	26.42	**13.79**	7.71	28.13	**14.27**	9.46	28.13	**14.27**	9.46	–	–	–	–	–	–
149.86	Output torque, in–lb	52922	**55899**	50899	72322	**74448**	62791	77004	**77004**	77004	77004	**77004**	77004	–	–	–	–	–	–
	OHL input shaft	**(A)**	**555**	741	**(A)**	**515**	874	**(A)**	**957**	997	**(A)**	**1329**	1384	–	–	–	–	–	–
	OHL output shaft **(B)**	11478	**11478**	11478	11478	**11478**	11478	11478	**11478**	11478	11478	**11478**	11478	–	–	–	–	–	–
	Output RPM	22	**11**	7	22	**11**	7	22	**11**	7	22	**11**	7	–	–	–	–	–	–
	Input Hp (max) **(C)**	18.43	**10.03**	6.07	25.13	**13.41**	7.49	26.53	**13.46**	8.92	26.53	**13.46**	8.92	–	–	–	–	–	–
158.88	Output torque, in–lb	53503	**57404**	52418	72940	**76708**	64698	77004	**77004**	77004	77004	**77004**	77004	–	–	–	–	–	–
	OHL input shaft	**(A)**	**522**	741	**(A)**	**465**	874	**(A)**	**958**	997	**(A)**	**1330**	1385	–	–	–	–	–	–
	OHL output shaft **(B)**	11478	**11478**	11478	11478	**11478**	11478	11478	**11478**	11478	11478	**11478**	11478	–	–	–	–	–	–
	Output RPM	19	**10**	6	19	**10**	6	19	**10**	6	–	–	–	–	–	–	–	–	–
	Input Hp (max) **(C)**	16.61	**9.04**	5.68	22.53	**11.87**	7.01	23.40	**11.87**	7.87	–	–	–	–	–	–	–	–	–
180.11	Output torque, in–lb	54663	**58649**	55629	74134	**77004**	68641	77004	**77004**	77004	–	–	–	–	–	–	–	–	–
	OHL input shaft	**(A)**	**514**	740	**(A)**	**496**	873	**(A)**	**958**	997	–	–	–	–	–	–	–	–	–
	OHL output shaft **(B)**	11478	**11478**	11478	11478	**11478**	11478	11478	**11478**	11478	–	–	–	–	–	–	–	–	–
	Output RPM	18	**9**	6	18	**9**	6	18	**9**	6	–	–	–	–	–	–	–	–	–
	Input Hp (max) **(C)**	15.69	**8.54**	5.49	21.24	**11.09**	6.79	21.87	**11.09**	7.35	–	–	–	–	–	–	–	–	–
192.71	Output torque, in–lb	55253	**59277**	57495	74777	**77004**	71087	77004	**77004**	77004	–	–	–	–	–	–	–	–	–
	OHL input shaft	**(A)**	**509**	740	**(A)**	**515**	872	**(A)**	**958**	997	–	–	–	–	–	–	–	–	–
	OHL output shaft **(B)**	11478	**11478**	11478	11478	**11478**	11478	11478	**11478**	11478	–	–	–	–	–	–	–	–	–
	Output RPM	17	**9**	6	17	**9**	6	17	**9**	6	–	–	–	–	–	–	–	–	–
	Input Hp (max) **(C)**	15.03	**8.18**	5.36	20.31	**10.55**	6.65	20.80	**10.55**	6.99	–	–	–	–	–	–	–	–	–
202.69	Output torque, in–lb	55663	**59724**	59002	75219	**77004**	73222	77004	**77004**	77004	–	–	–	–	–	–	–	–	–
	OHL input shaft	**(A)**	**507**	739	**(A)**	**526**	871	**(A)**	**958**	997	–	–	–	–	–	–	–	–	–
	OHL output shaft **(B)**	11478	**11478**	11478	11478	**11478**	11478	11478	**11478**	11478	–	–	–	–	–	–	–	–	–
	Output RPM	16	**8**	5	16	**8**	5	16	**8**	5	–	–	–	–	–	–	–	–	–
	Input Hp (max) **(C)**	14.08	**7.66**	5.16	18.98	**9.78**	6.43	19.27	**9.78**	6.48	–	–	–	–	–	–	–	–	–
218.71	Output torque, in–lb	56261	**60363**	61291	75823	**77004**	76450	77004	**77004**	77004	–	–	–	–	–	–	–	–	–
	OHL input shaft	**(A)**	**502**	739	**(A)**	**543**	878	**(A)**	**950**	989	–	–	–	–	–	–	–	–	–
	OHL output shaft **(B)**	11478	**11478**	11478	11478	**11478**	11478	11478	**11478**	11478	–	–	–	–	–	–	–	–	–

Service factor: 1.0

(A) (B) (C) - See footnotes page on inside back cover

Blank areas (-) indicate configuration not available

MSM 148

Size: MW1484

Four-stage reduction – Clamp collar, three-piece coupled, separate

NEMA motor frame		56C			—			140TC			180TC			—			210TC		
IEC motor frame		71D			80D			90D			100D			112D			132D		
Separate group		71			80			90			100			112			132		
Ratio	Output Rating data	3450	1750	1160	3450	1750	1160	3450	1750	1160	3450	1750	1160	3450	1750	1160	3450	1750	1160
	Output RPM	13.99	**7.10**	4.75	13.99	**7.10**	4.75	13.99	**7.10**	4.75	13.99	**7.10**	4.75	13.99	**7.10**	4.75	13.99	**7.10**	4.75
	Input Hp (max) **(C)**	3.98	**2.02**	1.34	4.85	**2.46**	1.63	9.58	**4.86**	3.22	17.10	**8.67**	5.75	17.10	**8.67**	5.75	17.10	**8.67**	5.75
246.52	Output torque, in–lb	17924	**17934**	17948	21842	**21840**	21832	43143	**43148**	43128	77004	**77004**	77004	77004	**77004**	77004	77004	**77004**	77004
	OHL input shaft	**(A)**	**(A)**	**(A)**	**(A)**	**(A)**	**(A)**	**(A)**	**(A)**	**(A)**	**(A)**	**(A)**	**(A)**	**(A)**	**(A)**	**(A)**	**(A)**	**(A)**	**(A)**
	OHL output shaft **(B)**	11478	**11478**	11478	11478	**11478**	11478	11478	**11478**	11478	11478	**11478**	11478	11478	**11478**	11478	11478	**11478**	11478
	Output RPM	13.26	**6.72**	4.50	13.26	**6.72**	4.50	13.26	**6.72**	4.50	13.26	**6.72**	4.50	13.26	**6.72**	4.50	13.26	**6.72**	4.50
	Input Hp (max) **(C)**	3.98	**2.02**	1.34	4.85	**2.46**	1.63	8.83	**4.48**	2.97	16.20	**8.22**	5.45	16.20	**8.22**	5.45	16.20	**8.22**	5.45
260.27	Output torque, in–lb	18923	**18934**	18949	23060	**23058**	23049	41983	**41992**	41998	77004	**77004**	77004	77004	**77004**	77004	77004	**77004**	77004
	OHL input shaft	**(A)**	**(A)**	**(A)**	**(A)**	**(A)**	**(A)**	**(A)**	**(A)**	**(A)**	**(A)**	**(A)**	**(A)**	**(A)**	**(A)**	**(A)**	**(A)**	**(A)**	**(A)**
	OHL output shaft **(B)**	11478	**11478**	11478	11478	**11478**	11478	11478	**11478**	11478	11478	**11478**	11478	11478	**11478**	11478	11478	**11478**	11478
	Output RPM	12.10	**6.14**	4.10	12.10	**6.14**	4.10	12.10	**6.14**	4.10	12.10	**6.14**	4.10	12.10	**6.14**	4.10	12.10	**6.14**	4.10
	Input Hp (max) **(C)**	3.98	**2.02**	1.34	4.85	**2.46**	1.63	9.58	**4.86**	3.22	14.79	**7.50**	4.97	14.79	**7.50**	4.97	14.79	**7.50**	4.97
285.02	Output torque, in–lb	20723	**20735**	20751	25253	**25252**	25242	49881	**49887**	49864	77004	**77004**	77004	77004	**77004**	77004	77004	**77004**	77004
	OHL input shaft	**(A)**	**(A)**	**(A)**	**(A)**	**(A)**	**(A)**	**(A)**	**(A)**	**(A)**	**(A)**	**(A)**	**(A)**	**(A)**	**(A)**	**(A)**	**(A)**	**(A)**	**(A)**
	OHL output shaft **(B)**	11478	**11478**	11478	11478	**11478**	11478	11478	**11478**	11478	11478	**11478**	11478	11478	**11478**	11478	11478	**11478**	11478
	Output RPM	11.56	**5.87**	3.92	11.56	**5.87**	3.92	11.56	**5.87**	3.92	11.56	**5.87**	3.92	11.56	**5.87**	3.92	11.56	**5.87**	3.92
	Input Hp (max) **(C)**	3.98	**2.02**	1.34	4.85	**2.46**	1.63	8.83	**4.48**	2.97	14.13	**7.17**	4.75	14.13	**7.17**	4.75	14.13	**7.17**	4.75
298.38	Output torque, in–lb	21694	**21707**	21723	26436	**26435**	26425	48130	**48141**	48148	77004	**77004**	77004	77004	**77004**	77004	77004	**77004**	77004
	OHL input shaft	**(A)**	**(A)**	**(A)**	**(A)**	**(A)**	**(A)**	**(A)**	**(A)**	**(A)**	**(A)**	**(A)**	**(A)**	**(A)**	**(A)**	**(A)**	**(A)**	**(A)**	**(A)**
	OHL output shaft **(B)**	11478	**11478**	11478	11478	**11478**	11478	11478	**11478**	11478	11478	**11478**	11478	11478	**11478**	11478	11478	**11478**	11478
	Output RPM	10.44	**5.30**	3.54	10.44	**5.30**	3.54	10.44	**5.30**	3.54	10.44	**5.30**	3.54	10.44	**5.30**	3.54	10.44	**5.30**	3.54
	Input Hp (max) **(C)**	3.98	**2.02**	1.34	4.85	**2.46**	1.63	9.17	**4.65**	3.08	12.76	**6.47**	4.29	12.76	**6.47**	4.29	12.76	**6.47**	4.29
330.30	Output torque, in–lb	24015	**24029**	24048	29265	**29263**	29252	55332	**55315**	55274	77004	**77004**	77004	77004	**77004**	77004	77004	**77004**	77004
	OHL input shaft	**(A)**	**(A)**	**(A)**	**(A)**	**(A)**	**(A)**	**(A)**	**(A)**	**(A)**	**(A)**	**(A)**	**(A)**	**(A)**	**(A)**	**(A)**	**(A)**	**(A)**	**(A)**
	OHL output shaft **(B)**	11478	**11478**	11478	11478	**11478**	11478	11478	**11478**	11478	11478	**11478**	11478	11478	**11478**	11478	11478	**11478**	11478
	Output RPM	10.20	**5.17**	3.46	10.20	**5.17**	3.46	10.20	**5.17**	3.46	10.20	**5.17**	3.46	10.20	**5.17**	3.46	10.20	**5.17**	3.46
	Input Hp (max) **(C)**	3.98	**2.02**	1.34	4.85	**2.46**	1.63	8.32	**4.22**	2.80	12.46	**6.32**	4.19	12.46	**6.32**	4.19	12.46	**6.32**	4.19
338.27	Output torque, in–lb	24594	**24609**	24627	29971	**29969**	29957	51413	**51410**	51460	77004	**77004**	77004	77004	**77004**	77004	77004	**77004**	77004
	OHL input shaft	**(A)**	**(A)**	**(A)**	**(A)**	**(A)**	**(A)**	**(A)**	**(A)**	**(A)**	**(A)**	**(A)**	**(A)**	**(A)**	**(A)**	**(A)**	**(A)**	**(A)**	**(A)**
	OHL output shaft **(B)**	11478	**11478**	11478	11478	**11478**	11478	11478	**11478**	11478	11478	**11478**	11478	11478	**11478**	11478	11478	**11478**	11478
	Output RPM	9.44	**4.79**	3.20	9.44	**4.79**	3.20	9.44	**4.79**	3.20	9.44	**4.79**	3.20	9.44	**4.79**	3.20	9.44	**4.79**	3.20
	Input Hp (max) **(C)**	3.98	**2.02**	1.34	4.85	**2.46**	1.63	9.17	**4.65**	3.08	11.53	**5.85**	3.88	11.53	**5.85**	3.88	11.53	**5.85**	3.88
365.49	Output torque, in–lb	26574	**26589**	26610	32383	**32381**	32368	61227	**61208**	61162	77004	**77004**	77004	77004	**77004**	77004	77004	**77004**	77004
	OHL input shaft	**(A)**	**(A)**	**(A)**	**(A)**	**(A)**	**(A)**	**(A)**	**(A)**	**(A)**	**(A)**	**(A)**	**(A)**	**(A)**	**(A)**	**(A)**	**(A)**	**(A)**	**(A)**
	OHL output shaft **(B)**	11478	**11478**	11478	11478	**11478**	11478	11478	**11478**	11478	11478	**11478**	11478	11478	**11478**	11478	11478	**11478**	11478
	Output RPM	9.01	**4.57**	3.05	9.01	**4.57**	3.05	9.01	**4.57**	3.05	9.01	**4.57**	3.05	9.01	**4.57**	3.05	9.01	**4.57**	3.05
	Input Hp (max) **(C)**	3.98	**2.02**	1.34	4.85	**2.46**	1.63	9.58	**4.86**	3.22	11.00	**5.58**	3.70	11.00	**5.58**	3.70	11.00	**5.58**	3.70
383.10	Output torque, in–lb	27854	**27870**	27891	33943	**33941**	33928	67045	**67053**	67023	77004	**77004**	77004	77004	**77004**	77004	77004	**77004**	77004
	OHL input shaft	**(A)**	**(A)**	**(A)**	**(A)**	**(A)**	**(A)**	**(A)**	**(A)**	**(A)**	**(A)**	**(A)**	**(A)**	**(A)**	**(A)**	**(A)**	**(A)**	**(A)**	**(A)**
	OHL output shaft **(B)**	11478	**11478**	11478	11478	**11478**	11478	11478	**11478**	11478	11478	**11478**	11478	11478	**11478**	11478	11478	**11478**	11478
	Output RPM	8.07	**4.09**	2.74	8.07	**4.09**	2.74	8.07	**4.09**	2.74	8.07	**4.09**	2.74	8.07	**4.09**	2.74	8.07	**4.09**	2.74
	Input Hp (max) **(C)**	3.98	**2.02**	1.34	4.85	**2.46**	1.63	9.17	**4.65**	3.08	9.85	**5.00**	3.31	9.85	**5.00**	3.31	9.85	**5.00**	3.31
427.73	Output torque, in–lb	31099	**31117**	31141	37897	**37895**	37880	71653	**71631**	71577	77004	**77004**	77004	77004	**77004**	77004	77004	**77004**	77004
	OHL input shaft	**(A)**	**(A)**	**(A)**	**(A)**	**(A)**	**(A)**	**(A)**	**(A)**	**(A)**	**(A)**	**(A)**	**(A)**	**(A)**	**(A)**	**(A)**	**(A)**	**(A)**	**(A)**
	OHL output shaft **(B)**	11478	**11478**	11478	11478	**11478**	11478	11478	**11478**	11478	11478	**11478**	11478	11478	**11478**	11478	11478	**11478**	11478
	Output RPM	7.90	**4.01**	2.68	7.90	**4.01**	2.68	7.90	**4.01**	2.68	7.90	**4.01**	2.68	7.90	**4.01**	2.68	7.90	**4.01**	2.68
	Input Hp (max) **(C)**	3.98	**2.02**	1.34	4.85	**2.46**	1.63	8.02	**4.07**	2.70	9.66	**4.90**	3.25	9.66	**4.90**	3.25	9.66	**4.90**	3.25
436.57	Output torque, in–lb	31742	**31760**	31785	38681	**38678**	38663	63963	**63992**	64044	77004	**77004**	77004	77004	**77004**	77004	77004	**77004**	77004
	OHL input shaft	**(A)**	**(A)**	**(A)**	**(A)**	**(A)**	**(A)**	**(A)**	**(A)**	**(A)**	**(A)**	**(A)**	**(A)**	**(A)**	**(A)**	**(A)**	**(A)**	**(A)**	**(A)**
	OHL output shaft **(B)**	11478	**11478**	11478	11478	**11478**	11478	11478	**11478**	11478	11478	**11478**	11478	11478	**11478**	11478	11478	**11478**	11478

Service factor: 1.0

(A) (B) (C) - See footnotes page on inside back cover

Blank areas (-) indicate configuration not available

MSM 148

Size: MW1484

Four-stage reduction – Clamp collar, three-piece coupled, separate

NEMA motor frame		56C			—			140TC			180TC			—			210TC		
IEC motor frame		71D			80D			90D			100D			112D			132D		
Separate group		71			80			90			100			112			132		
Ratio	Output Rating data	3450	1750	1160	3450	1750	1160	3450	1750	1160	3450	1750	1160	3450	1750	1160	3450	1750	1160
	Output RPM	7.14	**3.62**	2.42	7.14	**3.62**	2.42	7.14	**3.62**	2.42	7.14	**3.62**	2.42	7.14	**3.62**	2.42	7.14	**3.62**	2.42
	Input Hp (max) **(C)**	3.98	**2.02**	1.34	4.85	**2.46**	1.63	8.02	**4.07**	2.70	8.73	**4.43**	2.93	8.73	**4.43**	2.93	8.73	**4.43**	2.93
483.09	Output torque, in–lb	35124	**35144**	35171	42802	**42799**	42783	70777	**70810**	70867	77004	**77004**	77004	77004	**77004**	77004	77004	**77004**	77004
	OHL input shaft	**(A)**	**(A)**	**(A)**	**(A)**	**(A)**	**(A)**	**(A)**	**(A)**	**(A)**	**(A)**	**(A)**	**(A)**	**(A)**	**(A)**	**(A)**	**(A)**	**(A)**	**(A)**
	OHL output shaft **(B)**	11478	**11478**	11478	11478	**11478**	11478	11478	**11478**	11478	11478	**11478**	11478	11478	**11478**	11478	11478	**11478**	11478
	Output RPM	7.03	**3.56**	2.38	7.03	**3.56**	2.38	7.03	**3.56**	2.38	7.03	**3.56**	2.38	7.03	**3.56**	2.38	7.03	**3.56**	2.38
	Input Hp (max) **(C)**	3.98	**2.02**	1.34	4.85	**2.46**	1.63	8.59	**4.36**	2.89	8.59	**4.36**	2.89	8.59	**4.36**	2.89	8.59	**4.36**	2.89
490.94	Output torque, in–lb	35695	**35715**	35743	43497	**43495**	43478	77004	**77004**	77004	77004	**77004**	77004	77004	**77004**	77004	77004	**77004**	77004
	OHL input shaft	**(A)**	(A)	(A)	(A)	(A)	(A)	(A)	(A)	(A)	(A)	(A)	(A)	(A)	(A)	(A)	(A)	(A)	(A)
	OHL output shaft **(B)**	11478	**11478**	11478	11478	**11478**	11478	11478	**11478**	11478	11478	**11478**	11478	11478	**11478**	11478	11478	**11478**	11478
	Output RPM	6.67	**3.38**	2.26	6.67	**3.38**	2.26	6.67	**3.38**	2.26	6.67	**3.38**	2.26	6.67	**3.38**	2.26	6.67	**3.38**	2.26
	Input Hp (max) **(C)**	3.98	**2.02**	1.34	4.85	**2.46**	1.63	8.15	**4.14**	2.74	8.15	**4.14**	2.74	8.15	**4.14**	2.74	8.15	**4.14**	2.74
517.02	Output torque, in–lb	37591	**37612**	37641	45808	**45805**	45788	77004	**77004**	77004	77004	**77004**	77004	77004	**77004**	77004	77004	**77004**	77004
	OHL input shaft	**(A)**	(A)	(A)	(A)	(A)	(A)	(A)	(A)	(A)	(A)	(A)	(A)	(A)	(A)	(A)	(A)	(A)	(A)
	OHL output shaft **(B)**	11478	**11478**	11478	11478	**11478**	11478	11478	**11478**	11478	11478	**11478**	11478	11478	**11478**	11478	11478	**11478**	11478
	Output RPM	6.16	**3.12**	2.09	6.16	**3.12**	2.09	6.16	**3.12**	2.09	6.16	**3.12**	2.09	6.16	**3.12**	2.09	6.16	**3.12**	2.09
	Input Hp (max) **(C)**	3.98	**2.02**	1.34	4.85	**2.46**	1.63	7.52	**3.81**	2.53	7.52	**3.81**	2.53	7.52	**3.81**	2.53	7.52	**3.81**	2.53
560.48	Output torque, in–lb	40751	**40774**	40805	49658	**49655**	49636	77004	**77004**	77004	77004	**77004**	77004	77004	**77004**	77004	77004	**77004**	77004
	OHL input shaft	**(A)**	**(A)**	**(A)**	**(A)**	**(A)**	**(A)**	**(A)**	**(A)**	**(A)**	**(A)**	**(A)**	**(A)**	**(A)**	**(A)**	**(A)**	**(A)**	**(A)**	**(A)**
	OHL output shaft **(B)**	11478	**11478**	11478	11478	**11478**	11478	11478	**11478**	11478	11478	**11478**	11478	11478	**11478**	11478	11478	**11478**	11478
	Output RPM	5.83	**2.96**	1.98	5.83	**2.96**	1.98	5.83	**2.96**	1.98	5.83	**2.96**	1.98	5.83	**2.96**	1.98	5.83	**2.96**	1.98
	Input Hp (max) **(C)**	3.65	**1.85**	1.23	4.85	**2.46**	1.63	6.64	**3.37**	2.23	6.64	**3.37**	2.23	6.64	**3.37**	2.23	6.64	**3.37**	2.23
592.18	Output torque, in–lb	39486	**39455**	39574	52467	**52464**	52444	71832	**71872**	71749	71832	**71872**	71749	71832	**71872**	71749	71832	**71872**	71749
	OHL input shaft	**(A)**	**(A)**	**(A)**	**(A)**	**(A)**	**(A)**	**(A)**	**(A)**	**(A)**	**(A)**	**(A)**	**(A)**	**(A)**	**(A)**	**(A)**	**(A)**	**(A)**	**(A)**
	OHL output shaft **(B)**	11478	**11478**	11478	11478	**11478**	11478	11478	**11478**	11478	11478	**11478**	11478	11478	**11478**	11478	11478	**11478**	11478
	Output RPM	5.43	**2.75**	1.84	5.43	**2.75**	1.84	5.43	**2.75**	1.84	5.43	**2.75**	1.84	5.43	**2.75**	1.84	5.43	**2.75**	1.84
	Input Hp (max) **(C)**	3.98	**2.02**	1.34	4.85	**2.46**	1.63	6.63	**3.37**	2.23	6.63	**3.37**	2.23	6.63	**3.37**	2.23	6.63	**3.37**	2.23
635.41	Output torque, in–lb	46199	**46225**	46261	56297	**56294**	56272	77004	**77004**	77004	77004	**77004**	77004	77004	**77004**	77004	77004	**77004**	77004
	OHL input shaft	**(A)**	**(A)**	**(A)**	**(A)**	**(A)**	**(A)**	**(A)**	**(A)**	**(A)**	**(A)**	**(A)**	**(A)**	**(A)**	**(A)**	**(A)**	**(A)**	**(A)**	**(A)**
	OHL output shaft **(B)**	11478	**11478**	11478	11478	**11478**	11478	11478	**11478**	11478	11478	**11478**	11478	11478	**11478**	11478	11478	**11478**	11478
	Output RPM	4.93	**2.50**	1.67	4.93	**2.50**	1.67	4.93	**2.50**	1.67	4.93	**2.50**	1.67	4.93	**2.50**	1.67	4.93	**2.50**	1.67
	Input Hp (max) **(C)**	3.98	**2.02**	1.34	4.85	**2.46**	1.63	6.03	**3.06**	2.03	6.03	**3.06**	2.03	6.03	**3.06**	2.03	6.03	**3.06**	2.03
699.28	Output torque, in–lb	50843	**50872**	50911	61957	**61953**	61929	77004	**77004**	77004	77004	**77004**	77004	77004	**77004**	77004	77004	**77004**	77004
	OHL input shaft	**(A)**	**(A)**	**(A)**	**(A)**	**(A)**	**(A)**	**(A)**	**(A)**	**(A)**	**(A)**	**(A)**	**(A)**	**(A)**	**(A)**	**(A)**	**(A)**	**(A)**	**(A)**
	OHL output shaft **(B)**	11478	**11478**	11478	11478	**11478**	11478	11478	**11478**	11478	11478	**11478**	11478	11478	**11478**	11478	11478	**11478**	11478
	Output RPM	4.70	**2.38**	1.59	4.70	**2.38**	1.59	4.70	**2.38**	1.59	4.70	**2.38**	1.59	4.70	**2.38**	1.59	4.70	**2.38**	1.59
	Input Hp (max) **(C)**	3.80	**1.93**	1.28	4.85	**2.46**	1.63	5.74	**2.91**	1.93	5.74	**2.91**	1.93	5.74	**2.91**	1.93	5.74	**2.91**	1.93
733.96	Output torque, in–lb	50951	**51016**	51043	65029	**65025**	65000	77004	**77004**	77004	77004	**77004**	77004	77004	**77004**	77004	77004	**77004**	77004
	OHL input shaft	**(A)**	**(A)**	**(A)**	**(A)**	**(A)**	**(A)**	**(A)**	**(A)**	**(A)**	**(A)**	**(A)**	**(A)**	**(A)**	**(A)**	**(A)**	**(A)**	**(A)**	**(A)**
	OHL output shaft **(B)**	11478	**11478**	11478	11478	**11478**	11478	11478	**11478**	11478	11478	**11478**	11478	11478	**11478**	11478	11478	**11478**	11478
	Output RPM	4.30	**2.18**	1.46	4.30	**2.18**	1.46	4.30	**2.18**	1.46	4.30	**2.18**	1.46	4.30	**2.18**	1.46	4.30	**2.18**	1.46
	Input Hp (max) **(C)**	3.98	**2.02**	1.34	4.85	**2.46**	1.63	5.25	**2.66**	1.76	5.25	**2.66**	1.76	5.25	**2.66**	1.76	5.25	**2.66**	1.76
803.25	Output torque, in–lb	58402	**58435**	58480	71168	**71164**	71137	77004	**77004**	77004	77004	**77004**	77004	77004	**77004**	77004	77004	**77004**	77004
	OHL input shaft	**(A)**	**(A)**	**(A)**	**(A)**	**(A)**	**(A)**	**(A)**	**(A)**	**(A)**	**(A)**	**(A)**	**(A)**	**(A)**	**(A)**	**(A)**	**(A)**	**(A)**	**(A)**
	OHL output shaft **(B)**	11478	**11478**	11478	11478	**11478**	11478	11478	**11478**	11478	11478	**11478**	11478	11478	**11478**	11478	11478	**11478**	11478
	Output RPM	4.11	**2.09**	1.39	4.11	**2.09**	1.39	4.11	**2.09**	1.39	4.11	**2.09**	1.39	4.11	**2.09**	1.39	–	–	–
	Input Hp (max) **(C)**	3.25	**1.65**	1.09	4.32	**2.19**	1.45	5.02	**2.55**	1.69	5.02	**2.55**	1.69	5.02	**2.55**	1.69	–	–	–
839.04	Output torque, in–lb	49815	**49859**	49690	66216	**66177**	66101	77004	**77004**	77004	77004	**77004**	77004	77004	**77004**	77004	–	–	–
	OHL input shaft	**(A)**	**(A)**	**(A)**	**(A)**	**(A)**	**(A)**	**(A)**	**(A)**	**(A)**	**(A)**	**(A)**	**(A)**	**(A)**	**(A)**	**(A)**	–	–	–
	OHL output shaft **(B)**	11478	**11478**	11478	11478	**11478**	11478	11478	**11478**	11478	11478	**11478**	11478	11478	**11478**	11478	–	–	–

Service factor: 1.0

(A) (B) (C) - See footnotes page on inside back cover

Blank areas (-) indicate configuration not available

MSM 148

Size: MW1484

Four-stage reduction – Clamp collar, three-piece coupled, separate

NEMA motor frame		56C			—			140TC			180TC			—			210TC		
IEC motor frame		71D			80D			90D			100D			112D			132D		
Separate group		71			80			90			100			112			132		
Ratio	Output Rating data	3450	1750	1160	3450	1750	1160	3450	1750	1160	3450	1750	1160	3450	1750	1160	3450	1750	1160
	Output RPM	3.73	**1.89**	1.27	3.73	**1.89**	1.27	3.73	**1.89**	1.27	3.73	**1.89**	1.27	3.73	**1.89**	1.27	3.73	**1.89**	1.27
	Input Hp (max) **(C)**	3.98	**2.02**	1.34	4.56	**2.31**	1.53	4.56	**2.31**	1.53	4.56	**2.31**	1.53	4.56	**2.31**	1.53	4.56	**2.31**	1.53
924.27	Output torque, in–lb	67201	**67239**	67291	77004	**77004**	77004	77004	**77004**	77004	77004	**77004**	77004	77004	**77004**	77004	77004	**77004**	77004
	OHL input shaft	**(A)**	**(A)**	**(A)**	**(A)**	**(A)**	**(A)**	**(A)**	**(A)**	**(A)**	**(A)**	**(A)**	**(A)**	**(A)**	**(A)**	**(A)**	**(A)**	**(A)**	**(A)**
	OHL output shaft **(B)**	11478	**11478**	11478	11478	**11478**	11478	11478	**11478**	11478	11478	**11478**	11478	11478	**11478**	11478	11478	**11478**	11478
	Output RPM	3.63	**1.84**	1.23	3.63	**1.84**	1.23	3.63	**1.84**	1.23	3.63	**1.84**	1.23	3.63	**1.84**	1.23	3.63	**1.84**	1.23
	Input Hp (max) **(C)**	3.98	**2.02**	1.34	4.44	**2.25**	1.49	4.44	**2.25**	1.49	4.44	**2.25**	1.49	4.44	**2.25**	1.49	4.44	**2.25**	1.49
950.06	Output torque, in–lb	69076	**69116**	69169	77004	**77004**	77004	77004	**77004**	77004	77004	**77004**	77004	77004	**77004**	77004	77004	**77004**	77004
	OHL input shaft	**(A)**	**(A)**	**(A)**	**(A)**	**(A)**	**(A)**	**(A)**	**(A)**	**(A)**	**(A)**	**(A)**	**(A)**	**(A)**	**(A)**	**(A)**	**(A)**	**(A)**	**(A)**
	OHL output shaft **(B)**	11478	**11478**	11478	11478	**11478**	11478	11478	**11478**	11478	11478	**11478**	11478	11478	**11478**	11478	11478	**11478**	11478
	Output RPM	3.38	**1.72**	1.15	3.38	**1.72**	1.15	3.38	**1.72**	1.15	3.38	**1.72**	1.15	3.38	**1.72**	1.15	3.38	**1.72**	1.15
	Input Hp (max) **(C)**	3.98	**2.02**	1.34	4.13	**2.10**	1.39	4.13	**2.10**	1.39	4.13	**2.10**	1.39	4.13	**2.10**	1.39	4.13	**2.10**	1.39
1020.01	Output torque, in–lb	74162	**74205**	74262	77004	**77004**	77004	77004	**77004**	77004	77004	**77004**	77004	77004	**77004**	77004	77004	**77004**	77004
	OHL input shaft	**(A)**	**(A)**	**(A)**	**(A)**	**(A)**	**(A)**	**(A)**	**(A)**	**(A)**	**(A)**	**(A)**	**(A)**	**(A)**	**(A)**	**(A)**	**(A)**	**(A)**	**(A)**
	OHL output shaft **(B)**	11478	**11478**	11478	11478	**11478**	11478	11478	**11478**	11478	11478	**11478**	11478	11478	**11478**	11478	11478	**11478**	11478
	Output RPM	3.18	**1.61**	1.08	3.18	**1.61**	1.08	3.18	**1.61**	1.08	3.18	**1.61**	1.08	3.18	**1.61**	1.08	3.18	**1.61**	1.08
	Input Hp (max) **(C)**	3.88	**1.97**	1.32	3.88	**1.97**	1.32	3.88	**1.97**	1.32	3.88	**1.97**	1.32	3.88	**1.97**	1.32	3.88	**1.97**	1.32
1086.42	Output torque, in–lb	77004	**77004**	77004	77004	**77004**	77004	77004	**77004**	77004	77004	**77004**	77004	77004	**77004**	77004	77004	**77004**	77004
	OHL input shaft	**(A)**	**(A)**	**(A)**	**(A)**	**(A)**	**(A)**	**(A)**	**(A)**	**(A)**	**(A)**	**(A)**	**(A)**	**(A)**	**(A)**	**(A)**	**(A)**	**(A)**	**(A)**
	OHL output shaft **(B)**	11478	**11478**	11478	11478	**11478**	11478	11478	**11478**	11478	11478	**11478**	11478	11478	**11478**	11478	11478	**11478**	11478
	Output RPM	2.88	**1.46**	0.98	2.88	**1.46**	0.98	2.88	**1.46**	0.98	2.88	**1.46**	0.98	2.88	**1.46**	0.98	2.88	**1.46**	0.98
	Input Hp (max) **(C)**	3.51	**1.78**	1.19	3.51	**1.78**	1.19	3.51	**1.78**	1.19	3.51	**1.78**	1.19	3.51	**1.78**	1.19	3.51	**1.78**	1.19
1199.92	Output torque, in–lb	77004	**77004**	77004	77004	**77004**	77004	77004	**77004**	77004	77004	**77004**	77004	77004	**77004**	77004	77004	**77004**	77004
	OHL input shaft	**(A)**	**(A)**	**(A)**	**(A)**	**(A)**	**(A)**	**(A)**	**(A)**	**(A)**	**(A)**	**(A)**	**(A)**	**(A)**	**(A)**	**(A)**	**(A)**	**(A)**	**(A)**
	OHL output shaft **(B)**	11478	**11478**	11478	11478	**11478**	11478	11478	**11478**	11478	11478	**11478**	11478	11478	**11478**	11478	11478	**11478**	11478
	Output RPM	2.79	**1.41**	0.95	2.79	**1.41**	0.95	2.79	**1.41**	0.95	2.79	**1.41**	0.95	2.79	**1.41**	0.95	2.79	**1.41**	0.95
	Input Hp (max) **(C)**	3.41	**1.73**	1.16	3.41	**1.73**	1.16	3.41	**1.73**	1.16	3.41	**1.73**	1.16	3.41	**1.73**	1.16	3.41	**1.73**	1.16
1237.20	Output torque, in–lb	77004	**77004**	77004	77004	**77004**	77004	77004	**77004**	77004	77004	**77004**	77004	77004	**77004**	77004	77004	**77004**	77004
	OHL input shaft	**(A)**	**(A)**	**(A)**	**(A)**	**(A)**	**(A)**	**(A)**	**(A)**	**(A)**	**(A)**	**(A)**	**(A)**	**(A)**	**(A)**	**(A)**	**(A)**	**(A)**	**(A)**
	OHL output shaft **(B)**	11478	**11478**	11478	11478	**11478**	11478	11478	**11478**	11478	11478	**11478**	11478	11478	**11478**	11478	11478	**11478**	11478
	Output RPM	2.74	**1.39**	0.93	2.74	**1.39**	0.93	2.74	**1.39**	0.93	2.74	**1.39**	0.93	2.74	**1.39**	0.93	–	–	–
	Input Hp (max) **(C)**	3.35	**1.70**	1.14	3.35	**1.70**	1.14	3.35	**1.70**	1.14	3.35	**1.70**	1.14	3.35	**1.70**	1.14	–	–	–
1258.33	Output torque, in–lb	77004	**77004**	77004	77004	**77004**	77004	77004	**77004**	77004	77004	**77004**	77004	77004	**77004**	77004	–	–	–
	OHL input shaft	**(A)**	**(A)**	**(A)**	**(A)**	**(A)**	**(A)**	**(A)**	**(A)**	**(A)**	**(A)**	**(A)**	**(A)**	**(A)**	**(A)**	**(A)**	–	–	–
	OHL output shaft **(B)**	11478	**11478**	11478	11478	**11478**	11478	11478	**11478**	11478	11478	**11478**	11478	11478	**11478**	11478	–	–	–
	Output RPM	2.46	**1.25**	0.83	2.46	**1.25**	0.83	2.46	**1.25**	0.83	2.46	**1.25**	0.83	–	–	–	–	–	–
	Input Hp (max) **(C)**	3.01	**1.53**	1.02	3.01	**1.53**	1.02	3.01	**1.53**	1.02	3.01	**1.53**	1.02	–	–	–	–	–	–
1401.32	Output torque, in–lb	77004	**77004**	77004	77004	**77004**	77004	77004	**77004**	77004	77004	**77004**	77004	–	–	–	–	–	–
	OHL input shaft	**(A)**	**(A)**	**(A)**	**(A)**	**(A)**	**(A)**	**(A)**	**(A)**	**(A)**	**(A)**	**(A)**	**(A)**	–	–	–	–	–	–
	OHL output shaft **(B)**	11478	**11478**	11478	11478	**11478**	11478	11478	**11478**	11478	11478	**11478**	11478	–	–	–	–	–	–
	Output RPM	2.42	**1.23**	0.82	2.42	**1.23**	0.82	2.42	**1.23**	0.82	2.42	**1.23**	0.82	2.42	**1.23**	0.82	–	–	–
	Input Hp (max) **(C)**	2.95	**1.50**	1.00	2.95	**1.50**	1.00	2.95	**1.50**	1.00	2.95	**1.50**	1.00	2.95	**1.50**	1.00	–	–	–
1426.47	Output torque, in–lb	77004	**77004**	77004	77004	**77004**	77004	77004	**77004**	77004	77004	**77004**	77004	77004	**77004**	77004	–	–	–
	OHL input shaft	**(A)**	**(A)**	**(A)**	**(A)**	**(A)**	**(A)**	**(A)**	**(A)**	**(A)**	**(A)**	**(A)**	**(A)**	**(A)**	**(A)**	**(A)**	–	–	–
	OHL output shaft **(B)**	11478	**11478**	11478	11478	**11478**	11478	11478	**11478**	11478	11478	**11478**	11478	11478	**11478**	11478	–	–	–
	Output RPM	2.17	**1.10**	0.74	2.17	**1.10**	0.74	2.17	**1.10**	0.74	2.17	**1.10**	0.74	–	–	–	–	–	–
	Input Hp (max) **(C)**	2.65	**1.35**	0.90	2.65	**1.35**	0.90	2.65	**1.35**	0.90	2.65	**1.35**	0.90	–	–	–	–	–	–
1588.57	Output torque, in–lb	77004	**77004**	77004	77004	**77004**	77004	77004	**77004**	77004	77004	**77004**	77004	–	–	–	–	–	–
	OHL input shaft	**(A)**	**(A)**	**(A)**	**(A)**	**(A)**	**(A)**	**(A)**	**(A)**	**(A)**	**(A)**	**(A)**	**(A)**	–	–	–	–	–	–
	OHL output shaft **(B)**	11478	**11478**	11478	11478	**11478**	11478	11478	**11478**	11478	11478	**11478**	11478	–	–	–	–	–	–

Service factor: 1.0

(A) (B) (C) - See footnotes page on inside back cover

Blank areas (-) indicate configuration not available

MSM 148

Size: MW1484

Four-stage reduction – Clamp collar, three-piece coupled, separate

NEMA motor frame		56C			—			140TC			180TC			—			210TC		
IEC motor frame		71D			80D			90D			100D			112D			132D		
Separate group		71			80			90			100			112			132		
Ratio	Output Rating data	3450	1750	1160	3450	1750	1160	3450	1750	1160	3450	1750	1160	3450	1750	1160	3450	1750	1160
	Output RPM	1.90	**0.96**	0.64	1.90	**0.96**	0.64	1.90	**0.96**	0.64	–	–	–	–	–	–	–	–	–
	Input Hp (max) **(C)**	2.32	**1.18**	0.79	2.32	**1.18**	0.79	2.32	**1.18**	0.79	–	–	–	–	–	–	–	–	–
1815.51	Output torque, in–lb	77004	**77004**	77004	77004	**77004**	77004	77004	**77004**	77004	–	–	–	–	–	–	–	–	–
	OHL input shaft	**(A)**	**(A)**	**(A)**	**(A)**	**(A)**	**(A)**	**(A)**	**(A)**	**(A)**	–	–	–	–	–	–	–	–	–
	OHL output shaft **(B)**	11478	**11478**	11478	11478	**11478**	11478	11478	**11478**	11478	–	–	–	–	–	–	–	–	–
	Output RPM	1.86	**0.94**	0.63	1.86	**0.94**	0.63	1.86	**0.94**	0.63	–	–	–	–	–	–	–	–	–
	Input Hp (max) **(C)**	2.27	**1.15**	0.77	2.27	**1.15**	0.77	2.27	**1.15**	0.77	–	–	–	–	–	–	–	–	–
1858.26	Output torque, in–lb	77004	**77004**	77004	77004	**77004**	77004	77004	**77004**	77004	–	–	–	–	–	–	–	–	–
	OHL input shaft	**(A)**	**(A)**	**(A)**	**(A)**	**(A)**	**(A)**	**(A)**	**(A)**	**(A)**	–	–	–	–	–	–	–	–	–
	OHL output shaft **(B)**	11478	**11478**	11478	11478	**11478**	11478	11478	**11478**	11478	–	–	–	–	–	–	–	–	–
	Output RPM	1.69	**0.86**	0.57	1.69	**0.86**	0.57	1.69	**0.86**	0.57	–	–	–	–	–	–	–	–	–
	Input Hp (max) **(C)**	2.06	**1.05**	0.70	2.06	**1.05**	0.70	2.06	**1.05**	0.70	–	–	–	–	–	–	–	–	–
2043.12	Output torque, in–lb	77004	**77004**	77004	77004	**77004**	77004	77004	**77004**	77004	–	–	–	–	–	–	–	–	–
	OHL input shaft	**(A)**	**(A)**	**(A)**	**(A)**	**(A)**	**(A)**	**(A)**	**(A)**	**(A)**	–	–	–	–	–	–	–	–	–
	OHL output shaft **(B)**	11478	**11478**	11478	11478	**11478**	11478	11478	**11478**	11478	–	–	–	–	–	–	–	–	–
	Output RPM	1.60	**0.81**	0.54	1.60	**0.81**	0.54	1.60	**0.81**	0.54	–	–	–	–	–	–	–	–	–
	Input Hp (max) **(C)**	1.96	**0.99**	0.66	1.96	**0.99**	0.66	1.96	**0.99**	0.66	–	–	–	–	–	–	–	–	–
2154.50	Output torque, in–lb	77004	**77004**	77004	77004	**77004**	77004	77004	**77004**	77004	–	–	–	–	–	–	–	–	–
	OHL input shaft	**(A)**	**(A)**	**(A)**	**(A)**	**(A)**	**(A)**	**(A)**	**(A)**	**(A)**	–	–	–	–	–	–	–	–	–
	OHL output shaft **(B)**	11478	**11478**	11478	11478	**11478**	11478	11478	**11478**	11478	–	–	–	–	–	–	–	–	–
	Output RPM	1.52	**0.77**	0.52	1.52	**0.77**	0.52	1.52	**0.77**	0.52	–	–	–	–	–	–	–	–	–
	Input Hp (max) **(C)**	1.86	**0.94**	0.63	1.86	**0.94**	0.63	1.86	**0.94**	0.63	–	–	–	–	–	–	–	–	–
2266.07	Output torque, in–lb	77004	**77004**	77004	77004	**77004**	77004	77004	**77004**	77004	–	–	–	–	–	–	–	–	–
	OHL input shaft	**(A)**	**(A)**	**(A)**	**(A)**	**(A)**	**(A)**	**(A)**	**(A)**	**(A)**	–	–	–	–	–	–	–	–	–
	OHL output shaft **(B)**	11478	**11478**	11478	11478	**11478**	11478	11478	**11478**	11478	–	–	–	–	–	–	–	–	–
	Output RPM	1.44	**0.73**	0.49	1.44	**0.73**	0.49	1.44	**0.73**	0.49	–	–	–	–	–	–	–	–	–
	Input Hp (max) **(C)**	1.76	**0.89**	0.60	1.76	**0.89**	0.60	1.76	**0.89**	0.60	–	–	–	–	–	–	–	–	–
2389.60	Output torque, in–lb	77004	**77004**	77004	77004	**77004**	77004	77004	**77004**	77004	–	–	–	–	–	–	–	–	–
	OHL input shaft	**(A)**	**(A)**	**(A)**	**(A)**	**(A)**	**(A)**	**(A)**	**(A)**	**(A)**	–	–	–	–	–	–	–	–	–
	OHL output shaft **(B)**	11478	**11478**	11478	11478	**11478**	11478	11478	**11478**	11478	–	–	–	–	–	–	–	–	–
	Output RPM	1.37	**0.70**	0.47	1.37	**0.70**	0.47	1.37	**0.70**	0.47	–	–	–	–	–	–	–	–	–
	Input Hp (max) **(C)**	1.68	**0.85**	0.57	1.68	**0.85**	0.57	1.68	**0.85**	0.57	–	–	–	–	–	–	–	–	–
2513.36	Output torque, in–lb	77004	**77004**	77004	77004	**77004**	77004	77004	**77004**	77004	–	–	–	–	–	–	–	–	–
	OHL input shaft	**(A)**	**(A)**	**(A)**	**(A)**	**(A)**	**(A)**	**(A)**	**(A)**	**(A)**	–	–	–	–	–	–	–	–	–
	OHL output shaft **(B)**	11478	**11478**	11478	11478	**11478**	11478	11478	**11478**	11478	–	–	–	–	–	–	–	–	–

Service factor: 1.0

(A) (B) (C) - See footnotes page on inside back cover

Blank areas (-) indicate configuration not available

MSM 148

Size: MW1485

Five-stage reduction – Clamp collar, three-piece coupled, separate

NEMA motor frame		56C			—			140TC			180TC			—			210TC		
IEC motor frame		71D			80D			90D			100D			112D			132D		
Separate group		71			80			90			100			112			132		
Ratio	Output Rating data	3450	1750	1160	3450	1750	1160	3450	1750	1160	3450	1750	1160	3450	1750	1160	3450	1750	1160
	Output RPM	1.34	**0.68**	0.46	1.34	**0.68**	0.46	1.34	**0.68**	0.46	1.34	**0.68**	0.46	1.34	**0.68**	0.46	–	–	–
	Input Hp (max) **(C)**	1.64	**0.83**	0.56	1.64	**0.83**	0.56	1.64	**0.83**	0.56	1.64	**0.83**	0.56	1.64	**0.83**	0.56	–	–	–
2568.78	Output torque, in–lb	77004	**77004**	77004	77004	**77004**	77004	77004	**77004**	77004	77004	**77004**	77004	77004	**77004**	77004	–	–	–
	OHL input shaft	**(A)**	**(A)**	**(A)**	**(A)**	**(A)**	**(A)**	**(A)**	**(A)**	**(A)**	**(A)**	**(A)**	**(A)**	**(A)**	**(A)**	**(A)**	–	–	–
	OHL output shaft **(B)**	11478	**11478**	11478	11478	**11478**	11478	11478	**11478**	11478	11478	**11478**	11478	11478	**11478**	11478	–	–	–
	Output RPM	1.25	**0.64**	0.43	1.25	**0.64**	0.43	1.25	**0.64**	0.43	1.25	**0.64**	0.43	–	–	–	–	–	–
	Input Hp (max) **(C)**	1.53	**0.78**	0.52	1.53	**0.78**	0.52	1.53	**0.78**	0.52	1.53	**0.78**	0.52	–	–	–	–	–	–
2751.57	Output torque, in–lb	77004	**77004**	77004	77004	**77004**	77004	77004	**77004**	77004	77004	**77004**	77004	–	–	–	–	–	–
	OHL input shaft	**(A)**	**(A)**	**(A)**	**(A)**	**(A)**	**(A)**	**(A)**	**(A)**	**(A)**	**(A)**	**(A)**	**(A)**	–	–	–	–	–	–
	OHL output shaft **(B)**	11478	**11478**	11478	11478	**11478**	11478	11478	**11478**	11478	11478	**11478**	11478	–	–	–	–	–	–
	Output RPM	1.22	**0.62**	0.41	1.22	**0.62**	0.41	1.22	**0.62**	0.41	1.22	**0.62**	0.41	1.22	**0.62**	0.41	–	–	–
	Input Hp (max) **(C)**	1.49	**0.76**	0.51	1.49	**0.76**	0.51	1.49	**0.76**	0.51	1.49	**0.76**	0.51	1.49	**0.76**	0.51	–	–	–
2828.98	Output torque, in–lb	77004	**77004**	77004	77004	**77004**	77004	77004	**77004**	77004	77004	**77004**	77004	77004	**77004**	77004	–	–	–
	OHL input shaft	**(A)**	**(A)**	**(A)**	**(A)**	**(A)**	**(A)**	**(A)**	**(A)**	**(A)**	**(A)**	**(A)**	**(A)**	**(A)**	**(A)**	**(A)**	–	–	–
	OHL output shaft **(B)**	11478	**11478**	11478	11478	**11478**	11478	11478	**11478**	11478	11478	**11478**	11478	11478	**11478**	11478	–	–	–
	Output RPM	1.14	**0.58**	0.38	1.14	**0.58**	0.38	1.14	**0.58**	0.38	1.14	**0.58**	0.38	1.14	**0.58**	0.38	–	–	–
	Input Hp (max) **(C)**	1.39	**0.70**	0.47	1.39	**0.70**	0.47	1.39	**0.70**	0.47	1.39	**0.70**	0.47	1.39	**0.70**	0.47	–	–	–
3039.37	Output torque, in–lb	77004	**77004**	77004	77004	**77004**	77004	77004	**77004**	77004	77004	**77004**	77004	77004	**77004**	77004	–	–	–
	OHL input shaft	**(A)**	**(A)**	**(A)**	**(A)**	**(A)**	**(A)**	**(A)**	**(A)**	**(A)**	**(A)**	**(A)**	**(A)**	**(A)**	**(A)**	**(A)**	–	–	–
	OHL output shaft **(B)**	11478	**11478**	11478	11478	**11478**	11478	11478	**11478**	11478	11478	**11478**	11478	11478	**11478**	11478	–	–	–
	Output RPM	1.04	**0.53**	0.35	1.04	**0.53**	0.35	1.04	**0.53**	0.35	1.04	**0.53**	0.35	1.04	**0.53**	0.35	–	–	–
	Input Hp (max) **(C)**	1.27	**0.64**	0.43	1.27	**0.64**	0.43	1.27	**0.64**	0.43	1.27	**0.64**	0.43	1.27	**0.64**	0.43	–	–	–
3328.54	Output torque, in–lb	77004	**77004**	77004	77004	**77004**	77004	77004	**77004**	77004	77004	**77004**	77004	77004	**77004**	77004	–	–	–
	OHL input shaft	**(A)**	**(A)**	**(A)**	**(A)**	**(A)**	**(A)**	**(A)**	**(A)**	**(A)**	**(A)**	**(A)**	**(A)**	**(A)**	**(A)**	**(A)**	–	–	–
	OHL output shaft **(B)**	11478	**11478**	11478	11478	**11478**	11478	11478	**11478**	11478	11478	**11478**	11478	11478	**11478**	11478	–	–	–
	Output RPM	0.98	**0.49**	0.33	0.98	**0.49**	0.33	0.98	**0.49**	0.33	0.98	**0.49**	0.33	0.98	**0.49**	0.33	–	–	–
	Input Hp (max) **(C)**	1.19	**0.60**	0.40	1.19	**0.60**	0.40	1.19	**0.60**	0.40	1.19	**0.60**	0.40	1.19	**0.60**	0.40	–	–	–
3536.54	Output torque, in–lb	77004	**77004**	77004	77004	**77004**	77004	77004	**77004**	77004	77004	**77004**	77004	77004	**77004**	77004	–	–	–
	OHL input shaft	**(A)**	**(A)**	**(A)**	**(A)**	**(A)**	**(A)**	**(A)**	**(A)**	**(A)**	**(A)**	**(A)**	**(A)**	**(A)**	**(A)**	**(A)**	–	–	–
	OHL output shaft **(B)**	11478	**11478**	11478	11478	**11478**	11478	11478	**11478**	11478	11478	**11478**	11478	11478	**11478**	11478	–	–	–
	Output RPM	0.90	**0.46**	0.30	0.90	**0.46**	0.30	0.90	**0.46**	0.30	0.90	**0.46**	0.30	0.90	**0.46**	0.30	–	–	–
	Input Hp (max) **(C)**	1.10	**0.56**	0.37	1.10	**0.56**	0.37	1.10	**0.56**	0.37	1.10	**0.56**	0.37	1.10	**0.56**	0.37	–	–	–
3838.36	Output torque, in–lb	77004	**77004**	77004	77004	**77004**	77004	77004	**77004**	77004	77004	**77004**	77004	77004	**77004**	77004	–	–	–
	OHL input shaft	**(A)**	**(A)**	**(A)**	**(A)**	**(A)**	**(A)**	**(A)**	**(A)**	**(A)**	**(A)**	**(A)**	**(A)**	**(A)**	**(A)**	**(A)**	–	–	–
	OHL output shaft **(B)**	11478	**11478**	11478	11478	**11478**	11478	11478	**11478**	11478	11478	**11478**	11478	11478	**11478**	11478	–	–	–
	Output RPM	0.88	**0.44**	0.30	0.88	**0.44**	0.30	0.88	**0.44**	0.30	0.88	**0.44**	0.30	–	–	–	–	–	–
	Input Hp (max) **(C)**	1.07	**0.54**	0.36	1.07	**0.54**	0.36	1.07	**0.54**	0.36	1.07	**0.54**	0.36	–	–	–	–	–	–
3938.84	Output torque, in–lb	77004	**77004**	77004	77004	**77004**	77004	77004	**77004**	77004	77004	**77004**	77004	–	–	–	–	–	–
	OHL input shaft	**(A)**	**(A)**	**(A)**	**(A)**	**(A)**	**(A)**	**(A)**	**(A)**	**(A)**	**(A)**	**(A)**	**(A)**	–	–	–	–	–	–
	OHL output shaft **(B)**	11478	**11478**	11478	11478	**11478**	11478	11478	**11478**	11478	11478	**11478**	11478	–	–	–	–	–	–
	Output RPM	0.85	**0.43**	0.29	0.85	**0.43**	0.29	0.85	**0.43**	0.29	0.85	**0.43**	0.29	0.85	**0.43**	0.29	–	–	–
	Input Hp (max) **(C)**	1.04	**0.53**	0.35	1.04	**0.53**	0.35	1.04	**0.53**	0.35	1.04	**0.53**	0.35	1.04	**0.53**	0.35	–	–	–
4037.27	Output torque, in–lb	77004	**77004**	77004	77004	**77004**	77004	77004	**77004**	77004	77004	**77004**	77004	77004	**77004**	77004	–	–	–
	OHL input shaft	**(A)**	**(A)**	**(A)**	**(A)**	**(A)**	**(A)**	**(A)**	**(A)**	**(A)**	**(A)**	**(A)**	**(A)**	**(A)**	**(A)**	**(A)**	–	–	–
	OHL output shaft **(B)**	11478	**11478**	11478	11478	**11478**	11478	11478	**11478**	11478	11478	**11478**	11478	11478	**11478**	11478	–	–	–
	Output RPM	0.81	**0.41**	0.28	0.81	**0.41**	0.28	0.81	**0.41**	0.28	0.81	**0.41**	0.28	0.81	**0.41**	0.28	–	–	–
	Input Hp (max) **(C)**	0.99	**0.50**	0.34	0.99	**0.50**	0.34	0.99	**0.50**	0.34	0.99	**0.50**	0.34	0.99	**0.50**	0.34	–	–	–
4246.36	Output torque, in–lb	77004	**77004**	77004	77004	**77004**	77004	77004	**77004**	77004	77004	**77004**	77004	77004	**77004**	77004	–	–	–
	OHL input shaft	**(A)**	**(A)**	**(A)**	**(A)**	**(A)**	**(A)**	**(A)**	**(A)**	**(A)**	**(A)**	**(A)**	**(A)**	**(A)**	**(A)**	**(A)**	–	–	–
	OHL output shaft **(B)**	11478	**11478**	11478	11478	**11478**	11478	11478	**11478**	11478	11478	**11478**	11478	11478	**11478**	11478	–	–	–
	Output RPM	0.75	**0.38**	0.26	0.75	**0.38**	0.26	0.75	**0.38**	0.26	0.75	**0.38**	0.26	0.75	**0.38**	0.26	–	–	–
	Input Hp (max) **(C)**	0.92	**0.47**	0.31	0.92	**0.47**	0.31	0.92	**0.47**	0.31	0.92	**0.47**	0.31	0.92	**0.47**	0.31	–	–	–
4581.97	Output torque, in–lb	77004	**77004**	77004	77004	**77004**	77004	77004	**77004**	77004	77004	**77004**	77004	77004	**77004**	77004	–	–	–
	OHL input shaft	**(A)**	**(A)**	**(A)**	**(A)**	**(A)**	**(A)**	**(A)**	**(A)**	**(A)**	**(A)**	**(A)**	**(A)**	**(A)**	**(A)**	**(A)**	–	–	–
	OHL output shaft **(B)**	11478	**11478**	11478	11478	**11478**	11478	11478	**11478**	11478	11478	**11478**	11478	11478	**11478**	11478	–	–	–

Service factor: 1.0

(A) (B) (C) - See footnotes page on inside back cover

Blank areas (-) indicate configuration not available

MSM 148

Size: MW1485

Five-stage reduction – Clamp collar, three-piece coupled, separate

NEMA motor frame		56C			—			140TC			180TC			—			210TC		
IEC motor frame		71D			80D			90D			100D			112D			132D		
Separate group		71			80			90			100			112			132		
Ratio	Output Rating data	3450	1750	1160	3450	1750	1160	3450	1750	1160	3450	1750	1160	3450	1750	1160	3450	1750	1160
	Output RPM	0.67	**0.34**	0.23	0.67	**0.34**	0.23	0.67	**0.34**	0.23	0.67	**0.34**	0.23	–	–	–	–	–	–
	Input Hp (max) **(C)**	0.81	**0.41**	0.28	0.81	**0.41**	0.28	0.81	**0.41**	0.28	0.81	**0.41**	0.28	–	–	–	–	–	–
5176.36	Output torque, in–lb	77004	**77004**	77004	77004	**77004**	77004	77004	**77004**	77004	77004	**77004**	77004	–	–	–	–	–	–
	OHL input shaft	**(A)**	**(A)**	**(A)**	**(A)**	**(A)**	**(A)**	**(A)**	**(A)**	**(A)**	**(A)**	**(A)**	**(A)**	–	–	–	–	–	–
	OHL output shaft **(B)**	11478	**11478**	11478	11478	**11478**	11478	11478	**11478**	11478	11478	**11478**	11478	–	–	–	–	–	–
	Output RPM	0.64	**0.33**	0.22	0.64	**0.33**	0.22	0.64	**0.33**	0.22	0.64	**0.33**	0.22	–	–	–	–	–	–
	Input Hp (max) **(C)**	0.78	**0.40**	0.27	0.78	**0.40**	0.27	0.78	**0.40**	0.27	0.78	**0.40**	0.27	–	–	–	–	–	–
5377.37	Output torque, in–lb	77004	**77004**	77004	77004	**77004**	77004	77004	**77004**	77004	77004	**77004**	77004	–	–	–	–	–	–
	OHL input shaft	**(A)**	**(A)**	**(A)**	**(A)**	**(A)**	**(A)**	**(A)**	**(A)**	**(A)**	**(A)**	**(A)**	**(A)**	–	–	–	–	–	–
	OHL output shaft **(B)**	11478	**11478**	11478	11478	**11478**	11478	11478	**11478**	11478	11478	**11478**	11478	–	–	–	–	–	–
	Output RPM	0.59	**0.30**	0.20	0.59	**0.30**	0.20	0.59	**0.30**	0.20	–	–	–	–	–	–	–	–	–
	Input Hp (max) **(C)**	0.72	**0.36**	0.24	0.72	**0.36**	0.24	0.72	**0.36**	0.24	–	–	–	–	–	–	–	–	–
5888.09	Output torque, in–lb	77004	**77004**	77004	77004	**77004**	77004	77004	**77004**	77004	–	–	–	–	–	–	–	–	–
	OHL input shaft	**(A)**	**(A)**	**(A)**	**(A)**	**(A)**	**(A)**	**(A)**	**(A)**	**(A)**	–	–	–	–	–	–	–	–	–
	OHL output shaft **(B)**	11478	**11478**	11478	11478	**11478**	11478	11478	**11478**	11478	–	–	–	–	–	–	–	–	–
	Output RPM	0.52	**0.26**	0.18	0.52	**0.26**	0.18	0.52	**0.26**	0.18	–	–	–	–	–	–	–	–	–
	Input Hp (max) **(C)**	0.63	**0.32**	0.21	0.63	**0.32**	0.21	0.63	**0.32**	0.21	–	–	–	–	–	–	–	–	–
6674.88	Output torque, in–lb	77004	**77004**	77004	77004	**77004**	77004	77004	**77004**	77004	–	–	–	–	–	–	–	–	–
	OHL input shaft	**(A)**	**(A)**	**(A)**	**(A)**	**(A)**	**(A)**	**(A)**	**(A)**	**(A)**	–	–	–	–	–	–	–	–	–
	OHL output shaft **(B)**	11478	**11478**	11478	11478	**11478**	11478	11478	**11478**	11478	–	–	–	–	–	–	–	–	–
	Output RPM	0.50	**0.25**	0.17	0.50	**0.25**	0.17	0.50	**0.25**	0.17	0.50	**0.25**	0.17	–	–	–	–	–	–
	Input Hp (max) **(C)**	0.61	**0.31**	0.21	0.61	**0.31**	0.21	0.61	**0.31**	0.21	0.61	**0.31**	0.21	–	–	–	–	–	–
6948.42	Output torque, in–lb	77004	**77004**	77004	77004	**77004**	77004	77004	**77004**	77004	77004	**77004**	77004	–	–	–	–	–	–
	OHL input shaft	**(A)**	**(A)**	**(A)**	**(A)**	**(A)**	**(A)**	**(A)**	**(A)**	**(A)**	**(A)**	**(A)**	**(A)**	–	–	–	–	–	–
	OHL output shaft **(B)**	11478	**11478**	11478	11478	**11478**	11478	11478	**11478**	11478	11478	**11478**	11478	–	–	–	–	–	–
	Output RPM	0.46	**0.23**	0.16	0.46	**0.23**	0.16	0.46	**0.23**	0.16	–	–	–	–	–	–	–	–	–
	Input Hp (max) **(C)**	0.56	**0.28**	0.19	0.56	**0.28**	0.19	0.56	**0.28**	0.19	–	–	–	–	–	–	–	–	–
7511.69	Output torque, in–lb	77004	**77004**	77004	77004	**77004**	77004	77004	**77004**	77004	–	–	–	–	–	–	–	–	–
	OHL input shaft	**(A)**	**(A)**	**(A)**	**(A)**	**(A)**	**(A)**	**(A)**	**(A)**	**(A)**	–	–	–	–	–	–	–	–	–
	OHL output shaft **(B)**	11478	**11478**	11478	11478	**11478**	11478	11478	**11478**	11478	–	–	–	–	–	–	–	–	–

Service factor: 1.0

(A) (B) (C) - See footnotes page on inside back cover

Blank areas (-) indicate configuration not available

MSM 168

Size: MW1682

Double reduction – Clamp collar, three-piece coupled, separate

NEMA motor frame		210TC			250TC			280TC			320TC			360TC		
IEC motor frame		132D			160D			180D / 200D			225D			250D		
Separate group		132			160			180			225			250		
Ratio	Output Rating data	3450	1750	1160	3450	1750	1160	3450	1750	1160	3450	1750	1160	3450	1750	1160
	Output RPM	–	–	–	–	–	–	447	**227**	150	447	**227**	150	447	**227**	150
	Input Hp (max) **(C)**	–	–	–	–	–	–	182.55	**92.60**	61.38	296.51	**136.86**	74.87	297.84	**158.78**	100.29
7.71	Output torque, in–lb	–	–	–	–	–	–	25727	**25727**	25727	41788	**38023**	31382	41974	**44114**	42034
	OHL input shaft	–	–	–	–	–	–	**(A)**	**1811**	2102	**(A)**	**2185**	2014	**(A)**	**2138**	2640
	OHL output shaft **(B)**	–	–	–	–	–	–	**(A)**	**15239**	16653	**(A)**	**15239**	16653	**(A)**	**15239**	16653
	Output RPM	–	–	–	355	**180**	119	355	**180**	119	355	**180**	119	355	**180**	119
	Input Hp (max) **(C)**	–	–	–	89.63	**45.47**	30.14	182.55	**92.60**	61.38	264.35	**134.29**	73.46	265.63	**145.07**	98.05
9.71	Output torque, in–lb	–	–	–	15900	**15900**	15900	32384	**32384**	32384	46893	**46963**	38757	47120	**50734**	51731
	OHL input shaft	–	–	–	**(A)**	**1523**	1587	**(A)**	**1734**	1994	**(A)**	**2183**	1688	**(A)**	**2110**	2546
	OHL output shaft **(B)**	–	–	–	**(A)**	**15239**	16653	**(A)**	**15239**	16653	**(A)**	**15239**	16653	**(A)**	**15239**	16653
	Output RPM	–	–	–	277	**140**	93	277	**140**	93	277	**140**	93	277	**140**	93
	Input Hp (max) **(C)**	–	–	–	89.63	**45.47**	30.14	182.55	**92.60**	60.27	229.54	**125.37**	70.68	230.69	**126.00**	86.81
12.47	Output torque, in–lb	–	–	–	20413	**20413**	20413	41575	**41575**	40822	52277	**56288**	47876	52538	**56573**	58797
	OHL input shaft	–	–	–	**(A)**	**1488**	1585	**(A)**	**1625**	1933	**(A)**	**2150**	1386	**(A)**	**2088**	2524
	OHL output shaft **(B)**	–	–	–	**(A)**	**16653**	17897	**(A)**	**16653**	17897	**(A)**	**16653**	17897	**(A)**	**16653**	17897
	Output RPM	238	**121**	80	238	**121**	80	238	**121**	80	238	**121**	80	238	**121**	80
	Input Hp (max) **(C)**	64.54	**32.57**	18.15	89.63	**45.47**	30.14	182.55	**92.60**	58.30	208.96	**114.15**	68.26	210.05	**114.74**	79.05
14.51	Output torque, in–lb	17104	**17017**	14307	23754	**23754**	23754	48379	**48379**	45952	55375	**59637**	53800	55665	**59945**	62306
	OHL input shaft	**(A)**	**949**	992	**(A)**	**1450**	1580	**(A)**	**1526**	1884	**(A)**	**2108**	1052	**(A)**	**2050**	2519
	OHL output shaft **(B)**	15239	**16653**	17897	15239	**16653**	17897	15239	**16653**	17897	15239	**16653**	17897	15239	**16653**	17897
	Output RPM	209	**106**	70	209	**106**	70	209	**106**	70	209	**106**	70	209	**106**	70
	Input Hp (max) **(C)**	64.54	**31.66**	17.64	89.63	**45.47**	30.14	180.24	**92.60**	56.31	191.80	**104.78**	65.82	192.83	**105.33**	72.57
16.53	Output torque, in–lb	19495	**18852**	15851	27075	**27075**	27075	54442	**55142**	50590	57935	**62393**	59134	58244	**62723**	65198
	OHL input shaft	**(A)**	**946**	992	**(A)**	**1413**	1585	**(A)**	**1288**	1849	**(A)**	**2077**	637	**(A)**	**2018**	2513
	OHL output shaft **(B)**	15239	**16653**	17897	15239	**16653**	17897	15239	**16653**	17897	15239	**16653**	17897	15239	**16653**	17897
	Output RPM	190	**97**	64	190	**97**	64	190	**97**	64	190	**97**	64	190	**97**	64
	Input Hp (max) **(C)**	64.54	**30.91**	17.23	89.63	**45.47**	30.09	169.84	**92.60**	54.70	180.10	**98.38**	63.92	181.08	**98.91**	68.15
18.13	Output torque, in–lb	21380	**20188**	16971	29692	**29692**	29649	56260	**60473**	53893	59660	**64248**	62974	59984	**64596**	67146
	OHL input shaft	**(A)**	**944**	993	**(A)**	**1383**	1583	**(A)**	**1101**	1788	**(A)**	**2056**	2271	**(A)**	**1997**	2512
	OHL output shaft **(B)**	15239	**17897**	17897	15239	**17897**	17897	15239	**17897**	17897	15239	**17897**	17897	15239	**17897**	17897
	Output RPM	158	**80**	53	158	**80**	53	158	**80**	53	158	**80**	53	158	**80**	53
	Input Hp (max) **(C)**	64.54	**29.07**	16.20	89.63	**45.47**	28.01	150.02	**89.62**	51.09	157.62	**86.11**	59.34	158.50	**86.58**	59.66
21.85	Output torque, in–lb	25765	**22879**	19238	35782	**35782**	33260	59891	**70534**	60653	62924	**67766**	70451	63273	**68138**	70831
	OHL input shaft	**(A)**	**951**	993	**(A)**	**1313**	1578	**(A)**	**778**	1628	**(A)**	**2015**	2289	**(A)**	**1957**	2506
	OHL output shaft **(B)**	16653	**17897**	19910	16653	**17897**	19910	16653	**17897**	19910	16653	**17897**	19910	16653	**17897**	19910
	Output RPM	142	**72**	48	142	**72**	48	142	**72**	48	142	**72**	48	142	**72**	48
	Input Hp (max) **(C)**	64.54	**27.98**	15.59	89.63	**45.47**	26.82	139.01	**82.90**	49.30	145.73	**79.61**	54.86	146.53	**80.06**	55.16
24.28	Output torque, in–lb	28622	**24462**	20566	39750	**39750**	35381	61649	**72477**	65026	64629	**69603**	72355	64983	**69991**	72755
	OHL input shaft	**(A)**	**950**	993	**(A)**	**1225**	1590	**(A)**	**759**	1465	**(A)**	**1998**	2289	**(A)**	**1940**	2507
	OHL output shaft **(B)**	16653	**17897**	19910	16653	**17897**	19910	16653	**17897**	19910	16653	**17897**	19910	16653	**17897**	19910
	Output RPM	125	**64**	42	125	**64**	42	125	**64**	42	125	**64**	42	125	**64**	42
	Input Hp (max) **(C)**	63.57	**26.54**	14.79	89.08	**45.47**	25.35	128.72	**75.35**	47.42	132.39	**72.33**	49.85	133.14	**72.73**	50.13
27.50	Output torque, in–lb	31939	**26287**	22103	44753	**45033**	37883	64673	**74635**	70864	66515	**71643**	74488	66892	**72040**	74903
	OHL input shaft	**(A)**	**948**	992	**(A)**	**1035**	1587	**(A)**	**737**	1485	**(A)**	**1977**	2290	**(A)**	**1918**	2505
	OHL output shaft **(B)**	16653	**17897**	19910	16653	**17897**	19910	16653	**17897**	19910	16653	**17897**	19910	16653	**17897**	19910
	Output RPM	–	–	–	–	–	–	108	**55**	36	108	**55**	36	108	**55**	36
	Input Hp (max) **(C)**	–	–	–	–	–	–	115.45	**67.13**	46.25	117.89	**64.41**	44.37	118.55	**64.77**	44.63
31.83	Output torque, in–lb	–	–	–	–	–	–	67139	**76962**	79985	68557	**73836**	76736	68941	**74251**	77197
	OHL input shaft	–	–	–	–	–	–	**(A)**	**716**	1869	**(A)**	**1978**	2278	**(A)**	**1920**	2511
	OHL output shaft **(B)**	–	–	–	–	–	–	16653	**19910**	20233	16653	**19910**	20233	16653	**19910**	20233
	Output RPM	108	**55**	36	108	**55**	36	108	**55**	36	108	**55**	36	108	**55**	36
	Input Hp (max) **(C)**	64.54	**32.74**	19.25	89.63	**45.47**	30.14	136.00	**92.60**	61.38	163.30	**89.21**	61.47	187.35	**87.69**	62.99
32.07	Output torque, in–lb	37810	**37811**	33546	52510	**52510**	52510	79673	**106945**	106945	95665	**103032**	107092	109752	**101273**	109752
	OHL input shaft	**(A)**	**944**	983	**(A)**	**1309**	1583	**(A)**	**763**	1904	**(A)**	**1990**	2288	**(A)**	**1980**	2467
	OHL output shaft **(B)**	16653	**19910**	20233	16653	**19910**	20233	16653	**19910**	20233	16653	**19910**	20233	16653	**19910**	20233

Service factor: 1.0

(A) (B) (C) - See footnotes page on inside back cover

Blank areas (-) indicate configuration not available

MSM 168

Size: MW1682

Double reduction – Clamp collar, three-piece coupled, separate

NEMA motor frame		210TC			250TC			280TC			320TC			360TC		
IEC motor frame		132D			160D			180D / 200D			225D			250D		
Separate group		132			160			180			225			250		
Ratio	Output Rating data	3450	1750	1160	3450	1750	1160	3450	1750	1160	3450	1750	1160	3450	1750	1160
	Output RPM	94	**48**	32	94	**48**	32	94	**48**	32	94	**48**	32	94	**48**	32
	Input Hp (max) **(C)**	64.54	**32.74**	18.68	89.63	**45.47**	30.14	122.29	**83.38**	55.27	148.65	**81.21**	55.27	164.37	**79.80**	55.27
36.55	Output torque, in–lb	43094	**43095**	37104	59848	**59848**	59848	81651	**109752**	109752	99254	**106904**	109752	109752	**105048**	109752
	OHL input shaft	**(A)**	**950**	990	**(A)**	**1217**	1528	**(A)**	**774**	1937	**(A)**	**1967**	2286	**(A)**	**1960**	2503
	OHL output shaft **(B)**	17897	**19910**	20233	17897	**19910**	20233	17897	**19910**	20233	17897	**19910**	20233	17897	**19910**	20233
	Output RPM	82	**42**	28	82	**42**	28	82	**42**	28	82	**42**	28	82	**42**	28
	Input Hp (max) **(C)**	63.37	**32.62**	18.18	83.82	**45.47**	30.14	108.88	**72.51**	48.06	142.95	**72.51**	48.06	142.95	**71.89**	48.06
42.03	Output torque, in–lb	48657	**49378**	41520	64357	**68818**	68818	83592	**109752**	109752	109752	**109752**	109752	109752	**108812**	109752
	OHL input shaft	**(A)**	**951**	986	**(A)**	**1010**	1460	**(A)**	**857**	1946	**(A)**	**1971**	2280	**(A)**	**1936**	2538
	OHL output shaft **(B)**	17897	**19910**	20233	17897	**19910**	20233	17897	**19910**	20233	17897	**19910**	20233	17897	**19910**	20233
	Output RPM	72	**36**	24	72	**36**	24	72	**36**	24	72	**36**	24	72	**36**	24
	Input Hp (max) **(C)**	56.80	**31.72**	17.67	74.83	**43.70**	30.14	97.19	**63.43**	42.05	125.05	**63.43**	42.05	125.05	**63.43**	42.05
48.04	Output torque, in–lb	49850	**54885**	46134	65679	**75613**	78668	85296	**109752**	109752	109752	**109752**	109752	109752	**109752**	109752
	OHL input shaft	**(A)**	**671**	992	**(A)**	**869**	1276	**(A)**	**928**	1965	**(A)**	**2043**	2290	**(A)**	**1982**	2566
	OHL output shaft **(B)**	17897	**20233**	20233	17897	**20233**	20233	17897	**20233**	20233	17897	**20233**	20233	17897	**20233**	20233
	Output RPM	62	**31**	21	62	**31**	21	62	**31**	21	62	**31**	21	–	**–**	–
	Input Hp (max) **(C)**	50.19	**28.97**	17.25	65.87	**38.97**	26.82	85.52	**54.74**	36.28	107.91	**54.74**	36.28	–	**–**	–
55.68	Output torque, in–lb	51043	**58091**	52187	66992	**78132**	81138	86984	**109752**	109752	109752	**109752**	109752	–	**–**	–
	OHL input shaft	**(A)**	**525**	990	**(A)**	**850**	1261	**(A)**	**995**	1991	**(A)**	**2112**	2296	–	**–**	–
	OHL output shaft **(B)**	19910	**20233**	20233	19910	**20233**	20233	19910	**20233**	20233	19910	**20233**	20233	–	**–**	–
	Output RPM	57	**29**	19	57	**29**	19	57	**29**	19	57	**29**	19	–	**–**	–
	Input Hp (max) **(C)**	46.64	**27.04**	16.40	61.09	**36.39**	25.05	99.04	**50.24**	33.30	99.04	**50.24**	33.30	–	**–**	–
60.66	Output torque, in–lb	51682	**59072**	54052	67693	**79493**	82551	109752	**109752**	109752	109752	**109752**	109752	–	**–**	–
	OHL input shaft	**(A)**	**507**	989	**(A)**	**840**	1251	**(A)**	**1030**	2001	**(A)**	**2149**	2291	–	**–**	–
	OHL output shaft **(B)**	**(A)**	**20233**	20233	19910	**20233**	20233	19910	**20233**	20233	19910	**20233**	20233	–	**–**	–
	Output RPM	51	**26**	17	51	**26**	17	51	**26**	17	–	**–**	–	–	**–**	–
	Input Hp (max) **(C)**	42.48	**24.74**	15.65	55.49	**33.32**	22.93	88.91	**45.10**	29.89	–	**–**	–	–	**–**	–
67.58	Output torque, in–lb	52438	**60205**	57446	68504	**81089**	84200	109752	**109752**	109752	–	**–**	–	–	**–**	–
	OHL input shaft	**(A)**	**484**	987	**(A)**	**829**	1239	**(A)**	**1069**	2016	–	**–**	–	–	**–**	–
	OHL output shaft **(B)**	19910	**20233**	20233	19910	**20233**	20233	19910	**20233**	20233	–	**–**	–	–	**–**	–
	Output RPM	48	**24**	16	48	**24**	16	48	**24**	16	–	**–**	–	–	**–**	–
	Input Hp (max) **(C)**	40.39	**23.58**	14.76	52.70	**31.77**	21.87	83.93	**42.57**	28.22	–	**–**	–	–	**–**	–
71.58	Output torque, in–lb	52813	**60775**	57414	68908	**81893**	85035	109752	**109752**	109752	–	**–**	–	–	**–**	–
	OHL input shaft	**(A)**	**474**	989	**(A)**	**823**	1231	**(A)**	**1089**	2024	–	**–**	–	–	**–**	–
	OHL output shaft **(B)**	19910	**20233**	20233	19910	**20233**	20233	19910	**20233**	20233	–	**–**	–	–	**–**	–
	Output RPM	43	**22**	14	43	**22**	14	–	**–**	–	–	**–**	–	–	**–**	–
	Input Hp (max) **(C)**	36.40	**21.34**	13.88	47.38	**28.78**	19.81	–	**–**	–	–	**–**	–	–	**–**	–
80.50	Output torque, in–lb	53528	**61876**	60720	69681	**83433**	86653	–	**–**	–	–	**–**	–	–	**–**	–
	OHL input shaft	**(A)**	**456**	987	**(A)**	**812**	1223	–	**–**	–	–	**–**	–	–	**–**	–
	OHL output shaft **(B)**	19910	**20233**	20233	19910	**20233**	20233	–	**–**	–	–	**–**	–	–	**–**	–
	Output RPM	40	**20**	13	40	**20**	13	–	**–**	–	–	**–**	–	–	**–**	–
	Input Hp (max) **(C)**	34.29	**20.15**	12.91	44.58	**27.18**	18.15	–	**–**	–	–	**–**	–	–	**–**	–
86.06	Output torque, in–lb	53907	**62458**	60343	70091	**84256**	84888	–	**–**	–	–	**–**	–	–	**–**	–
	OHL input shaft	**(A)**	**444**	990	**(A)**	**807**	1282	–	**–**	–	–	**–**	–	–	**–**	–
	OHL output shaft **(B)**	20233	**20233**	20233	20233	**20233**	20233	–	**–**	–	–	**–**	–	–	**–**	–

Service factor: 1.0

(A) (B) (C) - See footnotes page on inside back cover

Blank areas (-) indicate configuration not available

MSM 168

Size: MW1683

Triple reduction – Clamp collar, three-piece coupled, separate

NEMA motor frame		210TC			250TC			280TC			320TC			360TC		
IEC motor frame		132D			160D			180D / 200D			225D			250D		
Separate group		132			160			180			225			250		
Ratio	Output Rating data	3450	1750	1160	3450	1750	1160	3450	1750	1160	3450	1750	1160	3450	1750	1160
	Output RPM	–	–	–	90	**45**	30	90	**45**	30	90	**45**	30	90	**45**	30
	Input Hp (max) **(C)**	–	–	–	89.63	**45.47**	30.14	168.58	**85.51**	56.68	168.58	**85.51**	56.68	168.58	**85.51**	56.68
38.51	Output torque, in–lb	–	–	–	63060	**63060**	63060	118603	**118603**	118603	118603	**118603**	118603	118603	**118603**	118603
	OHL input shaft	–	–	–	**(A)**	**1523**	1586	**(A)**	**1808**	2154	**(A)**	**2188**	2280	**(A)**	**2517**	2777
	OHL output shaft **(B)**	–	–	–	17897	**20233**	20233	17897	**20233**	20233	17897	**20233**	20233	17897	**20233**	20233
	Output RPM	–	–	–	69	**35**	23	69	**35**	23	69	**35**	23	69	**35**	23
	Input Hp (max) **(C)**	–	–	–	89.63	**45.47**	30.14	129.02	**65.45**	43.38	129.02	**65.45**	43.38	129.02	**65.45**	43.38
50.32	Output torque, in–lb	–	–	–	82396	**82396**	82396	118603	**118603**	118603	118603	**118603**	118603	118603	**118603**	118603
	OHL input shaft	–	–	–	**(A)**	**1478**	1584	**(A)**	**1881**	2229	**(A)**	**2204**	2296	**(A)**	**2583**	2794
	OHL output shaft **(B)**	–	–	–	17897	**20233**	20233	17897	**20233**	20233	17897	**20233**	20233	17897	**20233**	20233
	Output RPM	58	**30**	20	58	**30**	20	58	**30**	20	58	**30**	20	58	**30**	20
	Input Hp (max) **(C)**	64.54	**32.62**	18.18	89.63	**45.47**	30.14	109.55	**55.57**	36.83	109.55	**55.57**	36.83	109.55	**55.57**	36.83
59.27	Output torque, in–lb	69879	**69630**	58549	97044	**97044**	97044	118603	**118603**	118603	118603	**118603**	118603	118603	**118603**	118603
	OHL input shaft	**(A)**	**949**	992	**(A)**	**1440**	1577	**(A)**	**1916**	2263	**(A)**	**2206**	2298	**(A)**	**2618**	2797
	OHL output shaft **(B)**	19910	**20233**	20233	19910	**20233**	20233	19910	**20233**	20233	19910	**20233**	20233	19910	**20233**	20233
	Output RPM	51	**26**	17	51	**26**	17	51	**26**	17	51	**26**	17	51	**26**	17
	Input Hp (max) **(C)**	64.54	**31.72**	17.67	89.63	**45.47**	30.14	95.51	**48.45**	32.11	95.51	**48.45**	32.11	95.51	**48.45**	32.11
67.98	Output torque, in–lb	80149	**77656**	65275	111307	**111307**	111307	118603	**118603**	118603	118603	**118603**	118603	118603	**118603**	118603
	OHL input shaft	**(A)**	**946**	992	**(A)**	**1403**	1585	**(A)**	**1941**	2287	**(A)**	**2208**	2300	**(A)**	**2639**	2798
	OHL output shaft **(B)**	19910	**20233**	20233	19910	**20233**	20233	19910	**20233**	20233	19910	**20233**	20233	19910	**20233**	20233
	Output RPM	46	**23**	15	46	**23**	15	46	**23**	15	46	**23**	15	46	**23**	15
	Input Hp (max) **(C)**	64.54	**30.96**	17.25	86.66	**43.96**	29.14	86.66	**43.96**	29.14	86.66	**43.96**	29.14	86.66	**43.96**	29.14
74.92	Output torque, in–lb	88338	**83533**	70228	118603	**118603**	118603	118603	**118603**	118603	118603	**118603**	118603	118603	**118603**	118603
	OHL input shaft	**(A)**	**944**	992	**(A)**	**1395**	1584	**(A)**	**1955**	2303	**(A)**	**2208**	2300	**(A)**	**2652**	2771
	OHL output shaft **(B)**	19910	**20233**	20233	19910	**20233**	20233	19910	**20233**	20233	19910	**20233**	20233	19910	**20233**	20233
	Output RPM	39	**20**	13	39	**20**	13	39	**20**	13	39	**20**	13	39	**20**	13
	Input Hp (max) **(C)**	64.54	**29.43**	16.40	73.28	**37.17**	24.64	73.28	**37.17**	24.64	73.28	**37.17**	24.64	73.28	**37.17**	24.64
88.59	Output torque, in–lb	104459	**93896**	78944	118603	**118603**	118603	118603	**118603**	118603	118603	**118603**	118603	118603	**118603**	118603
	OHL input shaft	**(A)**	**951**	993	**(A)**	**1419**	1579	**(A)**	**1978**	2326	**(A)**	**2193**	2284	**(A)**	**2666**	2781
	OHL output shaft **(B)**	20233	**20233**	20233	20233	**20233**	20233	20233	**20233**	20233	20233	**20233**	20233	20233	**20233**	20233
	Output RPM	34	**17**	11	34	**17**	11	34	**17**	11	34	**17**	11	34	**17**	11
	Input Hp (max) **(C)**	64.30	**28.07**	15.65	64.30	**32.61**	21.62	64.30	**32.61**	21.62	64.30	**32.61**	21.62	64.30	**32.61**	21.62
100.98	Output torque, in–lb	118603	**102089**	85840	118603	**118603**	118603	118603	**118603**	118603	118603	**118603**	118603	118603	**118603**	118603
	OHL input shaft	**(A)**	**951**	993	**(A)**	**1436**	1585	**(A)**	**1993**	2342	**(A)**	**2190**	2281	**(A)**	**2663**	2778
	OHL output shaft **(B)**	20233	**20233**	20233	20233	**20233**	20233	20233	**20233**	20233	20233	**20233**	20233	20233	**20233**	20233
	Output RPM	30	**15**	10	30	**15**	10	30	**15**	10	30	**15**	10	–	–	–
	Input Hp (max) **(C)**	55.92	**26.49**	14.76	55.92	**28.36**	18.80	55.92	**28.36**	18.80	55.92	**28.36**	18.80	–	–	–
116.11	Output torque, in–lb	118603	**110783**	93132	118603	**118603**	118603	118603	**118603**	118603	118603	**118603**	118603	–	–	–
	OHL input shaft	**(A)**	**948**	993	**(A)**	**1451**	1590	**(A)**	**2007**	2356	**(A)**	**2196**	2288	–	–	–
	OHL output shaft **(B)**	20233	**20233**	20233	20233	**20233**	20233	20233	**20233**	20233	20233	**20233**	20233	–	–	–
	Output RPM	26	**13**	9	26	**13**	9	26	**13**	9	26	**13**	9	–	–	–
	Input Hp (max) **(C)**	48.91	**24.81**	13.88	48.91	**24.81**	16.45	48.91	**24.81**	16.45	48.91	**24.81**	16.45	–	–	–
132.73	Output torque, in–lb	118603	**118603**	100115	118603	**118603**	118603	118603	**118603**	118603	118603	**118603**	118603	–	–	–
	OHL input shaft	**(A)**	**946**	992	**(A)**	**1463**	1593	**(A)**	**2019**	2368	**(A)**	**2200**	2293	–	–	–
	OHL output shaft **(B)**	20233	**20233**	20233	20233	**20233**	20233	20233	**20233**	20233	20233	**20233**	20233	–	–	–
	Output RPM	22	**11**	8	22	**11**	8	22	**11**	8	22	**11**	8	–	–	–
	Input Hp (max) **(C)**	42.21	**21.41**	12.91	42.21	**21.41**	14.19	42.21	**21.41**	14.19	42.21	**21.41**	14.19	–	–	–
153.81	Output torque, in–lb	118603	**118603**	107846	118603	**118603**	118603	118603	**118603**	118603	118603	**118603**	118603	–	–	–
	OHL input shaft	**(A)**	**951**	991	**(A)**	**1474**	1595	**(A)**	**2030**	2380	**(A)**	**2203**	2296	–	–	–
	OHL output shaft **(B)**	20233	**20233**	20233	20233	**20233**	20233	20233	**20233**	20233	20233	**20233**	20233	–	–	–

Service factor: 1.0

(A) (B) (C) - See footnotes page on inside back cover

Blank areas (-) indicate configuration not available

MSM 168

Size: MW1683

Triple reduction – Clamp collar, three-piece coupled, separate

NEMA motor frame		210TC			250TC			280TC			320TC			360TC		
IEC motor frame		132D			160D			180D / 200D			225D			250D		
Separate group		132			160			180			225			250		
Ratio	Output Rating data	3450	1750	1160	3450	1750	1160	3450	1750	1160	3450	1750	1160	3450	1750	1160
	Output RPM	21	**10**	7	21	**10**	7	21	**10**	7	–	–	–	–	–	–
	Input Hp (max) **(C)**	38.74	**19.65**	12.35	38.74	**19.65**	13.03	38.74	**19.65**	13.03	–	–	–	–	–	–
167.58	Output torque, in–lb	118603	**118603**	112464	118603	**118603**	118603	118603	**118603**	118603	–	–	–	–	–	–
	OHL input shaft	**(A)**	**952**	991	**(A)**	**1480**	1596	**(A)**	**2029**	2386	–	–	–	–	–	–
	OHL output shaft **(B)**	20233	**20233**	20233	20233	**20233**	20233	20233	**20233**	20233	–	–	–	–	–	–
	Output RPM	18	**9**	6	18	**9**	6	18	**9**	6	–	–	–	–	–	–
	Input Hp (max) **(C)**	34.78	**17.64**	11.69	34.78	**17.64**	11.69	34.78	**17.64**	11.69	–	–	–	–	–	–
186.69	Output torque, in–lb	118603	**118603**	118576	118603	**118603**	118603	118603	**118603**	118603	–	–	–	–	–	–
	OHL input shaft	**(A)**	**950**	990	**(A)**	**1487**	1596	**(A)**	**2036**	2393	–	–	–	–	–	–
	OHL output shaft **(B)**	20233	**20233**	20233	20233	**20233**	20233	20233	**20233**	20233	–	–	–	–	–	–
	Output RPM	17	**9**	6	17	**9**	6	17	**9**	6	–	–	–	–	–	–
	Input Hp (max) **(C)**	32.83	**16.65**	11.04	32.83	**16.65**	11.04	32.83	**16.65**	11.04	–	–	–	–	–	–
197.75	Output torque, in–lb	118603	**118603**	118603	118603	**118603**	118603	118603	**118603**	118603	–	–	–	–	–	–
	OHL input shaft	**(A)**	**951**	991	**(A)**	**1491**	1596	**(A)**	**2040**	2396	–	–	–	–	–	–
	OHL output shaft **(B)**	20233	**20233**	20233	20233	**20233**	20233	20233	**20233**	20233	–	–	–	–	–	–
	Output RPM	16	**8**	5	16	**8**	5	–	–	–	–	–	–	–	–	–
	Input Hp (max) **(C)**	29.19	**14.81**	9.82	29.19	**14.81**	9.82	–	–	–	–	–	–	–	–	–
222.39	Output torque, in–lb	118603	**118603**	118603	118603	**118603**	118603	–	–	–	–	–	–	–	–	–
	OHL input shaft	**(A)**	**953**	993	**(A)**	**1497**	1597	–	–	–	–	–	–	–	–	–
	OHL output shaft **(B)**	20233	**20233**	20233	20233	**20233**	20233	–	–	–	–	–	–	–	–	–
	Output RPM	15	**7**	5	15	**7**	5	–	–	–	–	–	–	–	–	–
	Input Hp (max) **(C)**	27.31	**13.85**	9.18	27.31	**13.85**	9.18	–	–	–	–	–	–	–	–	–
237.76	Output torque, in–lb	118603	**118603**	118603	118603	**118603**	118603	–	–	–	–	–	–	–	–	–
	OHL input shaft	**(A)**	**954**	994	**(A)**	**1500**	1597	–	–	–	–	–	–	–	–	–
	OHL output shaft **(B)**	20233	**20233**	20233	20233	**20233**	20233	–	–	–	–	–	–	–	–	–

Service factor: 1.0

(A) (B) (C) - See footnotes page on inside back cover

Blank areas (-) indicate configuration not available

MSM 168

Size: MW1684

Four-stage reduction – Clamp collar, three-piece coupled, separate

NEMA motor frame		56C			—			140TC			180TC			—			210TC		
IEC motor frame		71D			80D			90D			100D			112D			132D		
Separate group		71			80			90			100			112			132		
Ratio	Output Rating data	3450	1750	1160	3450	1750	1160	3450	1750	1160	3450	1750	1160	3450	1750	1160	3450	1750	1160
	Output RPM	11.06	**11.06**	11.06	11.06	**5.61**	3.75	3.98	**5.61**	3.75	3.98	**5.61**	3.75	3.98	**5.61**	3.75	3.98	**5.61**	3.75
	Input Hp (max) **(C)**	3.98	**2.02**	1.34	4.85	**2.46**	1.63	9.58	**4.86**	3.22	17.59	**8.92**	5.91	20.81	**10.55**	7.00	20.81	**10.55**	7.00
312.03	Output torque, in–lb	22687	**22687**	22687	27646	**27644**	27634	54608	**54614**	54589	100266	**100238**	100193	118603	**118603**	118603	118603	**118603**	118603
	OHL input shaft	**(A)**	**(A)**	**(A)**	**(A)**	**(A)**	**(A)**	**(A)**	**(A)**	**(A)**	**(A)**	**(A)**	**(A)**	**(A)**	**(A)**	**(A)**	**(A)**	**(A)**	**(A)**
	OHL output shaft **(B)**	20233	**20233**	20233	20233	**20233**	20233	20233	**20233**	20233	20233	**20233**	20233	20233	**20233**	20233	20233	**20233**	20233
	Output RPM	9.14	**9.14**	9.14	9.14	**4.63**	3.10	9.14	**4.63**	3.10	9.14	**4.63**	3.10	9.14	**4.63**	3.10	9.14	**4.63**	3.10
	Input Hp (max) **(C)**	3.98	**2.02**	1.34	4.85	**2.46**	1.63	8.83	**4.48**	2.97	16.07	**8.15**	5.40	17.19	**8.72**	5.78	17.19	**8.72**	5.78
377.67	Output torque, in–lb	27459	**27459**	27459	33461	**33459**	33446	60920	**60934**	60942	110871	**110851**	110804	118603	**118603**	118603	118603	**118603**	118603
	OHL input shaft	**(A)**	**(A)**	**(A)**	**(A)**	**(A)**	**(A)**	**(A)**	**(A)**	**(A)**	**(A)**	**(A)**	**(A)**	**(A)**	**(A)**	**(A)**	**(A)**	**(A)**	**(A)**
	OHL output shaft **(B)**	20233	**20233**	20233	20233	**20233**	20233	20233	**20233**	20233	20233	**20233**	20233	20233	**20233**	20233	20233	**20233**	20233
	Output RPM	8.41	**8.41**	8.41	8.41	**4.27**	2.85	3.98	**4.27**	2.85	3.98	**4.27**	2.85	3.98	**4.27**	2.85	3.98	**4.27**	2.85
	Input Hp (max) **(C)**	3.98	**2.02**	1.34	4.85	**2.46**	1.63	9.58	**4.86**	3.22	15.83	**8.03**	5.32	15.83	**8.03**	5.32	15.83	**8.03**	5.32
410.14	Output torque, in–lb	29820	**29820**	29820	36338	**36336**	36322	71777	**71786**	71753	118603	**118603**	118603	118603	**118603**	118603	118603	**118603**	118603
	OHL input shaft	**(A)**	**(A)**	**(A)**	**(A)**	**(A)**	**(A)**	**(A)**	**(A)**	**(A)**	**(A)**	**(A)**	**(A)**	**(A)**	**(A)**	**(A)**	**(A)**	**(A)**	**(A)**
	OHL output shaft **(B)**	20233	**20233**	20233	20233	**20233**	20233	20233	**20233**	20233	20233	**20233**	20233	20233	**20233**	20233	20233	**20233**	20233
	Output RPM	7.94	**7.94**	7.94	7.94	**4.03**	2.69	7.94	**4.03**	2.69	7.94	**4.03**	2.69	7.94	**4.03**	2.69	7.94	**4.03**	2.69
	Input Hp (max) **(C)**	3.98	**2.02**	1.34	4.85	**2.46**	1.63	8.83	**4.48**	2.97	14.95	**7.58**	5.03	14.95	**7.58**	5.03	14.95	**7.58**	5.03
434.25	Output torque, in–lb	31573	**31573**	31573	38475	**38473**	38458	70048	**70064**	70073	118603	**118603**	118603	118603	**118603**	118603	118603	**118603**	118603
	OHL input shaft	**(A)**	**(A)**	**(A)**	**(A)**	**(A)**	**(A)**	**(A)**	**(A)**	**(A)**	**(A)**	**(A)**	**(A)**	**(A)**	**(A)**	**(A)**	**(A)**	**(A)**	**(A)**
	OHL output shaft **(B)**	20233	**20233**	20233	20233	**20233**	20233	20233	**20233**	20233	20233	**20233**	20233	20233	**20233**	20233	20233	**20233**	20233
	Output RPM	7.26	**7.26**	7.26	7.26	**3.68**	2.46	3.98	**3.68**	2.46	3.98	**3.68**	2.46	3.98	**3.68**	2.46	3.98	**3.68**	2.46
	Input Hp (max) **(C)**	3.98	**2.02**	1.34	4.85	**2.46**	1.63	9.58	**4.86**	3.22	13.66	**6.93**	4.59	13.66	**6.93**	4.59	13.66	**6.93**	4.59
475.27	Output torque, in–lb	34556	**34556**	34556	42109	**42107**	42091	83177	**83187**	83148	118603	**118603**	118603	118603	**118603**	118603	118603	**118603**	118603
	OHL input shaft	**(A)**	**(A)**	**(A)**	**(A)**	**(A)**	**(A)**	**(A)**	**(A)**	**(A)**	**(A)**	**(A)**	**(A)**	**(A)**	**(A)**	**(A)**	**(A)**	**(A)**	**(A)**
	OHL output shaft **(B)**	20233	**20233**	20233	20233	**20233**	20233	20233	**20233**	20233	20233	**20233**	20233	20233	**20233**	20233	20233	**20233**	20233
	Output RPM	6.95	**6.95**	6.95	6.95	**3.53**	2.36	6.95	**3.53**	2.36	6.95	**3.53**	2.36	6.95	**3.53**	2.36	6.95	**3.53**	2.36
	Input Hp (max) **(C)**	3.98	**2.02**	1.34	4.85	**2.46**	1.63	8.82	**4.48**	2.97	13.08	**6.63**	4.40	13.08	**6.63**	4.40	13.08	**6.63**	4.40
496.41	Output torque, in–lb	36093	**36093**	36093	43982	**43980**	43963	79984	**80093**	80104	118603	**118603**	118603	118603	**118603**	118603	118603	**118603**	118603
	OHL input shaft	**(A)**	**(A)**	**(A)**	**(A)**	**(A)**	**(A)**	**(A)**	**(A)**	**(A)**	**(A)**	**(A)**	**(A)**	**(A)**	**(A)**	**(A)**	**(A)**	**(A)**	**(A)**
	OHL output shaft **(B)**	20233	**20233**	20233	20233	**20233**	20233	20233	**20233**	20233	20233	**20233**	20233	20233	**20233**	20233	20233	**20233**	20233
	Output RPM	6.13	**6.13**	6.13	6.13	**3.11**	2.08	6.13	**3.11**	2.08	6.13	**3.11**	2.08	6.13	**3.11**	2.08	6.13	**3.11**	2.08
	Input Hp (max) **(C)**	3.98	**2.02**	1.34	4.85	**2.46**	1.63	8.32	**4.22**	2.80	11.54	**5.85**	3.88	11.54	**5.85**	3.88	11.54	**5.85**	3.88
562.78	Output torque, in–lb	40918	**40918**	40918	49862	**49859**	49840	85537	**85531**	85615	118603	**118603**	118603	118603	**118603**	118603	118603	**118603**	118603
	OHL input shaft	**(A)**	**(A)**	**(A)**	**(A)**	**(A)**	**(A)**	**(A)**	**(A)**	**(A)**	**(A)**	**(A)**	**(A)**	**(A)**	**(A)**	**(A)**	**(A)**	**(A)**	**(A)**
	OHL output shaft **(B)**	20233	**20233**	20233	20233	**20233**	20233	20233	**20233**	20233	20233	**20233**	20233	20233	**20233**	20233	20233	**20233**	20233
	Output RPM	5.29	**5.29**	5.29	5.29	**2.68**	1.79	5.29	**2.68**	1.79	5.29	**2.68**	1.79	5.29	**2.68**	1.79	5.29	**2.68**	1.79
	Input Hp (max) **(C)**	3.98	**2.02**	1.34	4.85	**2.46**	1.63	8.32	**4.22**	2.80	9.96	**5.05**	3.35	9.96	**5.05**	3.35	9.96	**5.05**	3.35
652.15	Output torque, in–lb	47416	**47443**	47480	57781	**57778**	57755	99121	**99115**	99212	118603	**118603**	118603	118603	**118603**	118603	118603	**118603**	118603
	OHL input shaft	**(A)**	**(A)**	**(A)**	**(A)**	**(A)**	**(A)**	**(A)**	**(A)**	**(A)**	**(A)**	**(A)**	**(A)**	**(A)**	**(A)**	**(A)**	**(A)**	**(A)**	**(A)**
	OHL output shaft **(B)**	20233	**20233**	20233	20233	**20233**	20233	20233	**20233**	20233	20233	**20233**	20233	20233	**20233**	20233	20233	**20233**	20233
	Output RPM	4.70	**4.70**	4.70	4.70	**2.38**	1.59	3.98	**2.38**	1.59	3.98	**2.38**	1.59	3.98	**2.38**	1.59	3.98	**2.38**	1.59
	Input Hp (max) **(C)**	8.84	**2.02**	1.34	4.85	**2.46**	1.63	8.84	**4.48**	2.97	8.84	**4.48**	2.97	8.84	**4.48**	2.97	8.84	**4.48**	2.97
734.68	Output torque, in–lb	118603	**53447**	53488	65093	**65089**	65064	118603	**118603**	118603	118603	**118603**	118603	118603	**118603**	118603	118603	**118603**	118603
	OHL input shaft	**(A)**	**(A)**	**(A)**	**(A)**	**(A)**	**(A)**	**(A)**	**(A)**	**(A)**	**(A)**	**(A)**	**(A)**	**(A)**	**(A)**	**(A)**	**(A)**	**(A)**	**(A)**
	OHL output shaft **(B)**	20233	**20233**	20233	20233	**20233**	20233	20233	**20233**	20233	20233	**20233**	20233	20233	**20233**	20233	20233	**20233**	20233
	Output RPM	4.21	**4.21**	4.21	4.21	**2.13**	1.43	4.21	**2.13**	1.43	4.21	**2.13**	1.43	4.21	**2.13**	1.43	4.21	**2.13**	1.43
	Input Hp (max) **(C)**	3.98	**2.02**	1.34	4.85	**2.46**	1.63	7.91	**4.01**	2.66	7.91	**4.01**	2.66	7.91	**4.01**	2.66	7.91	**4.01**	2.66
820.27	Output torque, in–lb	59640	**59674**	59720	72676	**72672**	72644	118603	**118603**	118603	118603	**118603**	118603	118603	**118603**	118603	118603	**118603**	118603
	OHL input shaft	**(A)**	**(A)**	**(A)**	**(A)**	**(A)**	**(A)**	**(A)**	**(A)**	**(A)**	**(A)**	**(A)**	**(A)**	**(A)**	**(A)**	**(A)**	**(A)**	**(A)**	**(A)**
	OHL output shaft **(B)**	20233	**20233**	20233	20233	**20233**	20233	20233	**20233**	20233	20233	**20233**	20233	20233	**20233**	20233	20233	**20233**	20233
	Output RPM	3.75	**3.75**	3.75	3.75	**1.90**	1.27	3.75	**1.90**	1.27	3.75	**1.90**	1.27	3.75	**1.90**	1.27	3.75	**1.90**	1.27
	Input Hp (max) **(C)**	3.98	**2.02**	1.34	4.85	**2.46**	1.63	7.05	**3.58**	2.37	7.05	**3.58**	2.37	7.05	**3.58**	2.37	7.05	**3.58**	2.37
920.38	Output torque, in–lb	66918	**66957**	67008	81546	**81541**	81510	118603	**118603**	118603	118603	**118603**	118603	118603	**118603**	118603	118603	**118603**	118603
	OHL input shaft	**(A)**	**(A)**	**(A)**	**(A)**	**(A)**	**(A)**	**(A)**	**(A)**	**(A)**	**(A)**	**(A)**	**(A)**	**(A)**	**(A)**	**(A)**	**(A)**	**(A)**	**(A)**
	OHL output shaft **(B)**	20233	**20233**	20233	20233	**20233**	20233	20233	**20233**	20233	20233	**20233**	20233	20233	**20233**	20233	20233	**20233**	20233

Service factor: 1.0

(A) (B) (C) - See footnotes page on inside back cover

Blank areas (-) indicate configuration not available

MSM 168

Size: MW1684

Four-stage reduction – Clamp collar, three-piece coupled, separate

NEMA motor frame		56C			—			140TC			180TC			—			210TC		
IEC motor frame		71D			80D			90D			100D			112D			132D		
Separate group		71			80			90			100			112			132		
Ratio	Output Rating data	3450	1750	1160	3450	1750	1160	3450	1750	1160	3450	1750	1160	3450	1750	1160	3450	1750	1160
	Output RPM	3.21	**3.21**	3.21	3.21	**1.63**	1.09	3.21	**1.63**	1.09	3.21	**1.63**	1.09	3.21	**1.63**	1.09	3.21	**1.63**	1.09
	Input Hp (max) **(C)**	3.65	**1.85**	1.23	4.85	**2.46**	1.63	6.03	**3.06**	2.03	6.03	**3.06**	2.03	6.03	**3.06**	2.03	6.03	**3.06**	2.03
1075.86	Output torque, in–lb	71737	**71681**	71898	95322	**95316**	95280	118603	**118603**	118603	118603	**118603**	118603	118603	**118603**	118603	118603	**118603**	118603
	OHL input shaft	**(A)**	(A)	(A)	(A)	(A)	(A)	(A)	(A)	(A)	(A)	(A)	(A)	(A)	(A)	(A)	(A)	(A)	(A)
	OHL output shaft **(B)**	20233	**20233**	20233	20233	**20233**	20233	20233	**20233**	20233	20233	**20233**	20233	20233	**20233**	20233	20233	**20233**	20233
	Output RPM	2.83	**2.83**	2.83	2.83	**1.44**	0.96	2.83	**1.44**	0.96	2.83	**1.44**	0.96	2.83	**1.44**	0.96	–	–	–
	Input Hp (max) **(C)**	3.25	**1.65**	1.09	4.32	**2.19**	1.45	5.33	**2.70**	1.79	5.33	**2.70**	1.79	5.33	**2.70**	1.79	–	–	–
1218.18	Output torque, in–lb	72325	**72388**	72142	96136	**96079**	95969	118603	**118603**	118603	118603	**118603**	118603	118603	**118603**	118603	–	–	–
	OHL input shaft	**(A)**	**(A)**	**(A)**	**(A)**	**(A)**	**(A)**	**(A)**	**(A)**	**(A)**	**(A)**	**(A)**	**(A)**	**(A)**	**(A)**	**(A)**	–	–	–
	OHL output shaft **(B)**	20233	**20233**	20233	20233	**20233**	20233	20233	**20233**	20233	20233	**20233**	20233	20233	**20233**	20233	–	–	–
	Output RPM	2.45	**2.45**	2.45	2.45	**1.24**	0.83	2.45	**1.24**	0.83	2.45	**1.24**	0.83	2.45	**1.24**	0.83	2.45	**1.24**	0.83
	Input Hp (max) **(C)**	4.61	**2.34**	1.56	4.61	**2.34**	1.55	4.61	**2.34**	1.55	4.61	**2.34**	1.55	4.61	**2.34**	1.55	4.61	**2.34**	1.55
1407.54	Output torque, in–lb	97710	**102397**	97887	118603	**118603**	118603	118603	**118603**	118603	118603	**118603**	118603	118603	**118603**	118603	118603	**118603**	118603
	OHL input shaft	**(A)**	**(A)**	**(A)**	**(A)**	**(A)**	**(A)**	**(A)**	**(A)**	**(A)**	**(A)**	**(A)**	**(A)**	**(A)**	**(A)**	**(A)**	**(A)**	**(A)**	**(A)**
	OHL output shaft **(B)**	20233	**20233**	20233	20233	**20233**	20233	20233	**20233**	20233	20233	**20233**	20233	20233	**20233**	20233	20233	**20233**	20233
	Output RPM	2.15	**2.15**	2.15	2.15	**1.09**	0.73	2.15	**1.09**	0.73	2.15	**1.09**	0.73	2.15	**1.09**	0.73	–	–	–
	Input Hp (max) **(C)**	3.41	**1.73**	1.15	4.04	**2.05**	1.36	4.04	**2.05**	1.36	4.04	**2.05**	1.36	4.04	**2.05**	1.36	–	–	–
1607.88	Output torque, in–lb	100162	**100178**	100463	118603	**118603**	118603	118603	**118603**	118603	118603	**118603**	118603	118603	**118603**	118603	–	–	–
	OHL input shaft	**(A)**	**(A)**	**(A)**	**(A)**	**(A)**	**(A)**	**(A)**	**(A)**	**(A)**	**(A)**	**(A)**	**(A)**	**(A)**	**(A)**	**(A)**	–	–	–
	OHL output shaft **(B)**	20233	**20233**	20233	20233	**20233**	20233	20233	**20233**	20233	20233	**20233**	20233	20233	**20233**	20233	–	–	–
	Output RPM	1.96	**1.96**	1.96	1.96	**0.99**	0.66	1.96	**0.99**	0.66	1.96	**0.99**	0.66	1.96	**0.99**	0.66	–	–	–
	Input Hp (max) **(C)**	3.25	**1.65**	1.09	3.69	**1.87**	1.24	3.69	**1.87**	1.24	3.69	**1.87**	1.24	3.69	**1.87**	1.24	–	–	–
1761.33	Output torque, in–lb	104573	**104664**	104309	118603	**118603**	118603	118603	**118603**	118603	118603	**118603**	118603	118603	**118603**	118603	–	–	–
	OHL input shaft	**(A)**	**(A)**	**(A)**	**(A)**	**(A)**	**(A)**	**(A)**	**(A)**	**(A)**	**(A)**	**(A)**	**(A)**	**(A)**	**(A)**	**(A)**	–	–	–
	OHL output shaft **(B)**	20233	**20233**	20233	20233	**20233**	20233	20233	**20233**	20233	20233	**20233**	20233	20233	**20233**	20233	–	–	–
	Output RPM	1.66	**1.66**	1.66	1.66	**0.84**	0.56	1.66	**0.84**	0.56	–	–	–	–	–	–	–	–	–
	Input Hp (max) **(C)**	2.44	**1.24**	0.82	3.12	**1.58**	1.05	3.12	**1.58**	1.05	–	–	–	–	–	–	–	–	–
2077.99	Output torque, in–lb	92625	**92798**	92579	118603	**118603**	118603	118603	**118603**	118603	–	–	–	–	–	–	–	–	–
	OHL input shaft	**(A)**	**(A)**	**(A)**	**(A)**	**(A)**	**(A)**	**(A)**	**(A)**	**(A)**	–	–	–	–	–	–	–	–	–
	OHL output shaft **(B)**	20233	**20233**	20233	20233	**20233**	20233	20233	**20233**	20233	–	–	–	–	–	–	–	–	–
	Output RPM	1.44	**1.44**	1.44	1.44	**0.73**	0.49	1.44	**0.73**	0.49	–	–	–	–	–	–	–	–	–
	Input Hp (max) **(C)**	2.71	**1.37**	0.92	2.71	**1.37**	0.91	2.71	**1.37**	0.91	–	–	–	–	–	–	–	–	–
2396.62	Output torque, in–lb	118603	**118603**	118063	118603	**118603**	118603	118603	**118603**	118603	–	–	–	–	–	–	–	–	–
	OHL input shaft	**(A)**	**(A)**	**(A)**	**(A)**	**(A)**	**(A)**	**(A)**	**(A)**	**(A)**	–	–	–	–	–	–	–	–	–
	OHL output shaft **(B)**	20233	**20233**	20233	20233	**20233**	20233	20233	**20233**	20233	–	–	–	–	–	–	–	–	–

Service factor: 1.0

(A) (B) (C) - See footnotes page on inside back cover

Blank areas (-) indicate configuration not available

MSM 168

Size: MW1685

Five-stage reduction – Clamp collar, three-piece coupled, separate

NEMA motor frame		56C			—			140TC			180TC			—			210TC		
IEC motor frame		71D			80D			90D			100D			112D			132D		
Separate group		71			80			90			100			112			132		
Ratio	Output Rating data	3450	1750	1160	3450	1750	1160	3450	1750	1160	3450	1750	1160	3450	1750	1160	3450	1750	1160
	Output RPM	1.46	**0.74**	0.49	1.46	**0.74**	0.49	1.46	**0.74**	0.49	1.46	**0.74**	0.49	1.46	**0.74**	0.49	1.46	**0.74**	0.49
	Input Hp (max) **(C)**	2.74	**1.39**	0.93	2.74	**1.39**	0.93	2.74	**1.39**	0.93	2.74	**1.39**	0.93	2.74	**1.39**	0.93	2.74	**1.39**	0.93
2365.25	Output torque, in–lb	118603	**118603**	118603	118603	**118603**	118603	118603	**118603**	118603	118603	**118603**	118603	118603	**118603**	118603	118603	**118603**	118603
	OHL input shaft	**(A)**	**(A)**	**(A)**	**(A)**	**(A)**	**(A)**	**(A)**	**(A)**	**(A)**	**(A)**	**(A)**	**(A)**	**(A)**	**(A)**	**(A)**	**(A)**	**(A)**	**(A)**
	OHL output shaft **(B)**	20233	**20233**	20233	20233	**20233**	20233	20233	**20233**	20233	20233	**20233**	20233	20233	**20233**	20233	20233	**20233**	20233
	Output RPM	1.29	**0.65**	0.44	1.29	**0.65**	0.44	1.29	**0.65**	0.44	1.29	**0.65**	0.44	1.29	**0.65**	0.44	1.29	**0.65**	0.44
	Input Hp (max) **(C)**	2.42	**1.23**	0.82	2.42	**1.23**	0.82	2.42	**1.23**	0.82	2.42	**1.23**	0.82	2.42	**1.23**	0.82	2.42	**1.23**	0.82
2681.15	Output torque, in–lb	118603	**118603**	118603	118603	**118603**	118603	118603	**118603**	118603	118603	**118603**	118603	118603	**118603**	118603	118603	**118603**	118603
	OHL input shaft	**(A)**	**(A)**	**(A)**	**(A)**	**(A)**	**(A)**	**(A)**	**(A)**	**(A)**	**(A)**	**(A)**	**(A)**	**(A)**	**(A)**	**(A)**	**(A)**	**(A)**	**(A)**
	OHL output shaft **(B)**	20233	**20233**	20233	20233	**20233**	20233	20233	**20233**	20233	20233	**20233**	20233	20233	**20233**	20233	20233	**20233**	20233
	Output RPM	1.12	**0.57**	0.38	1.12	**0.57**	0.38	1.12	**0.57**	0.38	1.12	**0.57**	0.38	1.12	**0.57**	0.38	1.12	**0.57**	0.38
	Input Hp (max) **(C)**	2.11	**1.07**	0.72	2.11	**1.07**	0.72	2.11	**1.07**	0.72	2.11	**1.07**	0.72	2.11	**1.07**	0.72	2.11	**1.07**	0.72
3071.05	Output torque, in–lb	118603	**118603**	118603	118603	**118603**	118603	118603	**118603**	118603	118603	**118603**	118603	118603	**118603**	118603	118603	**118603**	118603
	OHL input shaft	**(A)**	**(A)**	**(A)**	**(A)**	**(A)**	**(A)**	**(A)**	**(A)**	**(A)**	**(A)**	**(A)**	**(A)**	**(A)**	**(A)**	**(A)**	**(A)**	**(A)**	**(A)**
	OHL output shaft **(B)**	20233	**20233**	20233	20233	**20233**	20233	20233	**20233**	20233	20233	**20233**	20233	20233	**20233**	20233	20233	**20233**	20233
	Output RPM	1.02	**0.52**	0.35	1.02	**0.52**	0.35	1.02	**0.52**	0.35	1.02	**0.52**	0.35	1.02	**0.52**	0.35	1.02	**0.52**	0.35
	Input Hp (max) **(C)**	1.91	**0.97**	0.65	1.91	**0.97**	0.65	1.91	**0.97**	0.65	1.91	**0.97**	0.65	1.91	**0.97**	0.65	1.91	**0.97**	0.65
3391.25	Output torque, in–lb	118603	**118603**	118603	118603	**118603**	118603	118603	**118603**	118603	118603	**118603**	118603	118603	**118603**	118603	118603	**118603**	118603
	OHL input shaft	**(A)**	**(A)**	**(A)**	**(A)**	**(A)**	**(A)**	**(A)**	**(A)**	**(A)**	**(A)**	**(A)**	**(A)**	**(A)**	**(A)**	**(A)**	**(A)**	**(A)**	**(A)**
	OHL output shaft **(B)**	20233	**20233**	20233	20233	**20233**	20233	20233	**20233**	20233	20233	**20233**	20233	20233	**20233**	20233	20233	**20233**	20233
	Output RPM	0.88	**0.45**	0.30	0.88	**0.45**	0.30	0.88	**0.45**	0.30	0.88	**0.45**	0.30	0.88	**0.45**	0.30	0.88	**0.45**	0.30
	Input Hp (max) **(C)**	1.65	**0.84**	0.56	1.65	**0.84**	0.56	1.65	**0.84**	0.56	1.65	**0.84**	0.56	1.65	**0.84**	0.56	1.65	**0.84**	0.56
3929.85	Output torque, in–lb	118603	**118603**	118603	118603	**118603**	118603	118603	**118603**	118603	118603	**118603**	118603	118603	**118603**	118603	118603	**118603**	118603
	OHL input shaft	**(A)**	**(A)**	**(A)**	**(A)**	**(A)**	**(A)**	**(A)**	**(A)**	**(A)**	**(A)**	**(A)**	**(A)**	**(A)**	**(A)**	**(A)**	**(A)**	**(A)**	**(A)**
	OHL output shaft **(B)**	20233	**20233**	20233	20233	**20233**	20233	20233	**20233**	20233	20233	**20233**	20233	20233	**20233**	20233	20233	**20233**	20233
	Output RPM	0.75	**0.38**	0.26	0.75	**0.38**	0.26	0.75	**0.38**	0.26	0.75	**0.38**	0.26	0.75	**0.38**	0.26	0.75	**0.38**	0.26
	Input Hp (max) **(C)**	1.42	**0.72**	0.48	1.42	**0.72**	0.48	1.42	**0.72**	0.48	1.42	**0.72**	0.48	1.42	**0.72**	0.48	1.42	**0.72**	0.48
4577.86	Output torque, in–lb	118603	**118603**	118603	118603	**118603**	118603	118603	**118603**	118603	118603	**118603**	118603	118603	**118603**	118603	118603	**118603**	118603
	OHL input shaft	**(A)**	**(A)**	**(A)**	**(A)**	**(A)**	**(A)**	**(A)**	**(A)**	**(A)**	**(A)**	**(A)**	**(A)**	**(A)**	**(A)**	**(A)**	**(A)**	**(A)**	**(A)**
	OHL output shaft **(B)**	20233	**20233**	20233	20233	**20233**	20233	20233	**20233**	20233	20233	**20233**	20233	20233	**20233**	20233	20233	**20233**	20233
	Output RPM	0.67	**0.34**	0.23	0.67	**0.34**	0.23	0.67	**0.34**	0.23	0.67	**0.34**	0.23	0.67	**0.34**	0.23	0.67	**0.34**	0.23
	Input Hp (max) **(C)**	1.25	**0.64**	0.43	1.25	**0.64**	0.43	1.25	**0.64**	0.43	1.25	**0.64**	0.43	1.25	**0.64**	0.43	1.25	**0.64**	0.43
5173.66	Output torque, in–lb	118603	**118603**	118603	118603	**118603**	118603	118603	**118603**	118603	118603	**118603**	118603	118603	**118603**	118603	118603	**118603**	118603
	OHL input shaft	**(A)**	**(A)**	**(A)**	**(A)**	**(A)**	**(A)**	**(A)**	**(A)**	**(A)**	**(A)**	**(A)**	**(A)**	**(A)**	**(A)**	**(A)**	**(A)**	**(A)**	**(A)**
	OHL output shaft **(B)**	20233	**20233**	20233	20233	**20233**	20233	20233	**20233**	20233	20233	**20233**	20233	20233	**20233**	20233	20233	**20233**	20233
	Output RPM	0.57	**0.29**	0.19	0.57	**0.29**	0.19	0.57	**0.29**	0.19	0.57	**0.29**	0.19	0.57	**0.29**	0.19	0.57	**0.29**	0.19
	Input Hp (max) **(C)**	1.07	**0.54**	0.36	1.07	**0.54**	0.36	1.07	**0.54**	0.36	1.07	**0.54**	0.36	1.07	**0.54**	0.36	1.07	**0.54**	0.36
6051.15	Output torque, in–lb	118603	**118603**	118603	118603	**118603**	118603	118603	**118603**	118603	118603	**118603**	118603	118603	**118603**	118603	118603	**118603**	118603
	OHL input shaft	**(A)**	**(A)**	**(A)**	**(A)**	**(A)**	**(A)**	**(A)**	**(A)**	**(A)**	**(A)**	**(A)**	**(A)**	**(A)**	**(A)**	**(A)**	**(A)**	**(A)**	**(A)**
	OHL output shaft **(B)**	20233	**20233**	20233	20233	**20233**	20233	20233	**20233**	20233	20233	**20233**	20233	20233	**20233**	20233	20233	**20233**	20233
	Output RPM	0.51	**0.26**	0.17	0.51	**0.26**	0.17	0.51	**0.26**	0.17	0.51	**0.26**	0.17	0.51	**0.26**	0.17	0.51	**0.26**	0.17
	Input Hp (max) **(C)**	0.97	**0.49**	0.33	0.97	**0.49**	0.33	0.97	**0.49**	0.33	0.97	**0.49**	0.33	0.97	**0.49**	0.33	0.97	**0.49**	0.33
6716.72	Output torque, in–lb	118603	**118603**	118603	118603	**118603**	118603	118603	**118603**	118603	118603	**118603**	118603	118603	**118603**	118603	118603	**118603**	118603
	OHL input shaft	**(A)**	**(A)**	**(A)**	**(A)**	**(A)**	**(A)**	**(A)**	**(A)**	**(A)**	**(A)**	**(A)**	**(A)**	**(A)**	**(A)**	**(A)**	**(A)**	**(A)**	**(A)**
	OHL output shaft **(B)**	20233	**20233**	20233	20233	**20233**	20233	20233	**20233**	20233	20233	**20233**	20233	20233	**20233**	20233	20233	**20233**	20233
	Output RPM	0.49	**0.25**	0.17	0.49	**0.25**	0.17	0.49	**0.25**	0.17	0.49	**0.25**	0.17	–	–	–	–	–	–
	Input Hp (max) **(C)**	0.92	**0.47**	0.31	0.92	**0.47**	0.31	0.92	**0.47**	0.31	0.92	**0.47**	0.31	–	–	–	–	–	–
7048.41	Output torque, in–lb	118603	**118603**	118603	118603	**118603**	118603	118603	**118603**	118603	118603	**118603**	118603	–	–	–	–	–	–
	OHL input shaft	**(A)**	**(A)**	**(A)**	**(A)**	**(A)**	**(A)**	**(A)**	**(A)**	**(A)**	**(A)**	**(A)**	**(A)**	–	–	–	–	–	–
	OHL output shaft **(B)**	20233	**20233**	20233	20233	**20233**	20233	20233	**20233**	20233	20233	**20233**	20233	–	–	–	–	–	–
	Output RPM	0.45	**0.23**	0.15	0.45	**0.23**	0.15	0.45	**0.23**	0.15	0.45	**0.23**	0.15	0.45	**0.23**	0.15	–	–	–
	Input Hp (max) **(C)**	0.85	**0.43**	0.29	0.85	**0.43**	0.29	0.85	**0.43**	0.29	0.85	**0.43**	0.29	0.85	**0.43**	0.29	–	–	–
7670.23	Output torque, in–lb	118603	**118603**	118603	118603	**118603**	118603	118603	**118603**	118603	118603	**118603**	118603	118603	**118603**	118603	–	–	–
	OHL input shaft	**(A)**	**(A)**	**(A)**	**(A)**	**(A)**	**(A)**	**(A)**	**(A)**	**(A)**	**(A)**	**(A)**	**(A)**	**(A)**	**(A)**	**(A)**	–	–	–
	OHL output shaft **(B)**	20233	**20233**	20233	20233	**20233**	20233	20233	**20233**	20233	20233	**20233**	20233	20233	**20233**	20233	–	–	–

Service factor: 1.0

(A) (B) (C) - See footnotes page on inside back cover

Blank areas (-) indicate configuration not available

MSM Integral Gearmotors - 60 Hz

1750 RPM – 60 Hz

Input power (Hp)	Speed (RPM)	Ratio	OHL (LBF) (B)	Output torque (in-lb)	Gear stage	Service factor (SF)	Catalog number
0.25	86	20.37	706	183	2	7.94	MW382GH71C4
	78	22.58	706	203	2	7.36	
	68	25.58	706	230	2	6.70	
	62	28.22	906	254	2	6.20	
	55	31.91	906	287	2	5.63	
	48	36.43	906	328	2	5.05	
	46	38.19	906	344	2	5.89	
	40	43.43	962	391	2	5.33	
	35	49.56	962	446	2	4.80	
	31	55.84	962	503	2	4.36	
	28	62.40	962	562	2	3.97	
	25	71.18	962	641	2	3.55	
	22	80.17	962	722	2	3.21	
	40	44.05	962	397	3	7.36	MW383GH71C4
	34	51.16	962	461	3	6.34	
	32	55.40	962	499	3	5.85	
	28	62.66	962	564	3	5.18	
	25	68.86	962	620	3	4.71	
	23	75.95	962	684	3	4.27	
	21	84.13	962	757	3	3.86	
	19	93.67	962	843	3	3.46	
	16	107.49	962	968	3	3.02	
	15	118.98	962	1071	3	2.73	
	13	135.32	962	1218	3	2.40	
	11	154.43	962	1390	3	2.10	
	10	173.99	962	1567	3	1.86	
	9	194.43	962	1751	3	1.67	
	8	221.77	962	1997	3	1.46	
	7	249.78	962	2249	3	1.30	
	51	34.58	1334	311	2	7.93	MW482GH71C4
	46	38.33	1334	345	2	7.35	
	40	43.43	1334	391	2	6.69	
	37	47.92	1334	431	2	6.21	
	32	54.17	1334	488	2	5.62	
	28	61.86	1334	557	2	5.05	
	25	70.33	1334	633	2	4.54	
	23	75.27	1334	678	2	4.28	
	20	86.77	1334	781	2	3.79	
	25	70.42	1334	634	3	7.54	MW483GH71C4
	23	77.29	1334	696	3	6.87	
	21	85.22	1334	767	3	6.23	
	19	94.46	1334	850	3	5.62	
	16	107.02	1334	964	3	4.96	
	15	118.08	1334	1063	3	4.50	
	13	133.5	1334	1202	3	3.98	
	11	152.43	1334	1372	3	3.48	
	10	173.31	1334	1560	3	3.06	
	9	185.49	1334	1670	3	2.86	
	8	213.83	1334	1925	3	2.48	
	118	14.8	2200	133	2	8.08	MW582GH71C4
	104	16.8	2200	151	2	8.08	
	97	17.96	2200	162	2	8.08	
	86	20.38	2200	183	2	8.08	
	80	21.98	2200	198	2	8.08	
	74	23.8	2200	214	2	8.08	
	68	25.88	2200	233	2	8.08	
	63	27.94	2200	252	2	8.08	
	58	30.29	2200	273	2	8.08	
	53	32.95	2200	297	2	8.08	
	49	36	2200	324	2	8.08	
	44	39.52	2200	356	2	8.08	
	40	43.62	2200	393	2	8.08	
	36	49.21	2200	443	2	8.08	
	32	54.12	2200	487	2	8.08	
	29	59.92	2200	539	2	8.08	
	25	70.27	2200	633	2	8.08	
	23	77.54	2200	698	2	8.08	
	20	86.26	2200	777	2	8.08	
	37	47.88	2200	431	3	8.08	MW583GH71C4
	33	53.2	2200	479	3	8.08	

MSM integral gearmotors

1750 RPM – 60 Hz

Input power (Hp)	Speed (RPM)	Ratio	OHL (LBF) (B)	Output torque (in-lb)	Gear stage	Service factor (SF)	Catalog number
0.25 (cont.)	29	61.18	2200	551	3	8.08	MW583GH71C4
	27	65.8	2200	592	3	8.08	
	23	76.67	2200	690	3	8.08	
	21	83.13	2200	748	3	8.08	
	19	90.44	2200	814	3	8.08	
	18	98.8	2200	890	3	7.72	
	16	108.45	2200	976	3	7	
	15	119.7	2200	1078	3	6.36	
	13	135.05	2200	1216	3	5.64	
	12	148.52	2200	1337	3	5.12	
	11	164.44	2200	1481	3	4.64	
	9	192.85	2200	1736	3	3.96	
	8	212.8	2200	1916	3	3.56	
	7	236.74	2200	2132	3	3.2	
	42	41.89	2500	377	2	7.86	MW682GH71C4
	38	46.14	2500	415	2	7.30	
	33	53.07	2500	478	2	6.51	
	30	57.49	2500	518	2	6.10	
	28	63.54	2500	572	2	5.62	
	24	74.13	2500	667	2	4.93	
	21	82.52	2500	743	2	4.49	
	15	113.59	2500	1023	3	7.85	MW683GH71C4
	14	125.11	2500	1126	3	7.27	
	12	143.88	2500	1295	3	6.50	
	11	155.87	2500	1403	3	6.09	
	10	172.28	2500	1551	3	5.60	
	9	200.99	2500	1810	3	4.89	
	8	223.74	2500	2014	3	4.39	
	6.82	256.48	2500	2309	4	3.83	MW684GH71C4
	6.39	273.93	2500	2466	4	3.59	
	6.24	280.25	2500	2523	4	3.51	
	5.93	294.95	2500	2656	4	3.33	
	5.43	322.29	2500	2902	4	3.05	
	4.87	359.70	2500	3239	4	2.73	
	4.71	371.83	2500	3348	4	2.64	
	4.23	414.11	2500	3729	4	2.37	
	4.05	431.64	2500	3886	4	2.28	
	3.89	450.22	2500	4054	4	2.18	
	3.67	476.24	2500	4288	4	2.06	
	3.39	516.84	2500	4653	4	1.90	
	3.19	548.70	2500	4940	4	1.79	
	3.07	570.25	2500	5134	4	1.72	
	2.71	646.86	2500	5824	4	1.52	
	2.71	646.86	2500	5824	4	1.52	
	2.63	665.28	2500	5990	4	1.48	
	2.35	745.30	2500	6710	4	1.32	
	2.13	821.13	2500	7393	4	1.20	
	2.05	851.77	2500	7669	4	1.15	
	1.96	892.41	2500	8035	4	1.10	
	1.90	920.53	2500	8288	4	1.07	
	1.81	968.31	2500	8718	4	1.02	
	1.67	1049.01	2500	8851	4	0.94	
	1.56	1122.26	2500	8851	4	0.88	
	1.47	1194.20	2500	8851	4	0.82	
	1.35	1293.72	2500	8851	4	0.76	
	1.29	1352.66	2500	8851	4	0.73	
	1.22	1429.92	2500	8851	4	0.69	

(B) - See footnotes page on inside back cover

MSM integral gearmotors

1750 RPM – 60 Hz

Input power (Hp)	Speed (RPM)	Ratio	OHL (LBF) (B)	Output torque (in-lb)	Gear stage	Service factor (SF)	Catalog number
0.25 (cont.)	1.06	1647.55	2500	8851	5	0.60	MW685GH71C4
	0.94	1858.93	2500	8851	5	0.53	
	0.82	2124.46	2500	8851	5	0.46	
	0.74	2375.70	2500	8851	5	0.41	
	0.72	2437.81	2500	8851	5	0.40	
	0.65	2711.13	2500	8851	5	0.36	
	0.62	2825.80	2500	8851	5	0.35	
	0.61	2890.72	2500	8851	5	0.34	
	0.56	3143.48	2500	8851	5	0.31	
	0.52	3377.70	2500	8851	5	0.29	
	0.50	3525.06	2500	8851	5	0.28	
	0.43	4024.32	2500	8851	5	0.24	
	0.38	4575.38	2500	8851	5	0.21	
	0.33	5305.81	2500	8851	5	0.19	MW685GH71C4
	0.29	6116.34	2500	8851	5	0.16	
	0.25	7114.93	2500	8851	5	0.14	
	13	139.26	3611	1254	3	7.94	MW883GH71C4
	12	151.22	3611	1362	3	7.44	
	10	167.20	3611	1505	3	6.87	
	10	181.13	3611	1631	3	6.43	
	9	204.11	3611	1838	3	5.83	
	8	223.47	3611	2012	3	5.40	
	7	248.92	3611	2241	3	4.92	
	6	284.63	3611	2563	3	4.37	
	6	315.64	3611	2842	3	3.99	
	5	350.03	3611	3152	3	3.64	
	5.12	341.76	3611	3077	4	5.47	MW884GH71C4
	4.80	364.44	3611	3281	4	5.13	
	4.26	410.82	3611	3699	4	4.55	
	4.11	425.60	3611	3832	4	4.39	
	3.59	487.32	3611	4388	4	3.83	
	3.25	538.94	3611	4852	4	3.47	
	3.07	569.73	3611	5130	4	3.28	
	2.84	617.06	3611	5556	4	3.03	
	2.65	659.24	3611	5935	4	2.83	
	2.47	707.44	3611	6369	4	2.64	
	2.27	772.46	3611	6955	4	2.42	
	2.15	814.67	3611	7335	4	2.29	
	1.97	886.16	3611	7979	4	2.11	
	1.90	920.14	3611	8285	4	2.03	
	1.73	1013.28	3611	9123	4	1.84	
	1.66	1052.21	3611	9474	4	1.78	
	1.49	1170.70	3611	10540	4	1.60	
	1.43	1221.53	3611	10998	4	1.53	
	1.35	1292.02	3611	11633	4	1.45	
	1.29	1354.62	3611	12196	4	1.38	
	1.22	1428.77	3611	12864	4	1.31	
	1.15	1519.85	3611	13684	4	1.23	
	1.08	1617.14	3611	14560	4	1.16	MW884GH71C4
	1.05	1672.00	3611	15054	4	1.12	
	0.98	1778.15	3611	16010	4	1.05	
	0.93	1889.36	3611	16817	4	0.99	
	0.86	2041.10	3611	16817	4	0.92	
	0.79	2209.48	3611	16817	4	0.85	
	0.77	2262.68	3611	16817	4	0.83	
	0.70	2489.20	3611	16817	4	0.75	
	0.68	2587.29	3611	16817	4	0.72	

(B) - See footnotes page on inside back cover

MSM integral gearmotors

1750 RPM – 60 Hz

Input power (Hp)	Speed (RPM)	Ratio	OHL (LBF) (B)	Output torque (in-lb)	Gear stage	Service factor (SF)	Catalog number
0.25 (cont.)	0.78	2237.14	3611	16817	5	0.83	MW885GH71C4
	0.77	2286.99	3611	16817	5	0.82	
	0.67	2616.66	3611	16817	5	0.71	
	0.63	2757.33	3611	16817	5	0.68	
	0.59	2971.19	3611	16817	5	0.63	
	0.57	3080.65	3611	16817	5	0.61	
	0.53	3330.55	3611	16817	5	0.56	
	0.51	3416.29	3611	16817	5	0.55	
	0.46	3825.83	3611	16817	5	0.49	
	0.45	3857.30	3611	16817	5	0.48	
	0.39	4435.82	3611	16817	5	0.42	
	0.38	4602.47	3611	16817	5	0.41	
	0.35	4932.63	3611	16817	5	0.38	
	0.34	5103.90	3611	16817	5	0.37	
	0.30	5844.49	3611	16817	5	0.32	
	0.27	6566.41	3611	16817	5	0.28	
	0.25	7099.64	3611	16817	5	0.26	
	0.23	7551.23	3611	16817	5	0.25	
	6.86	255.20	5433	2298	4	13.10	MW1084GH71C4
	6.28	278.83	5433	2511	4	11.99	
	5.81	301.21	5433	2712	4	11.10	
	5.49	318.85	5433	2871	4	10.48	
	5.32	329.10	5433	2963	4	10.16	
	4.97	351.96	5433	3169	4	9.50	
	4.41	397.15	5433	3576	4	8.42	
	3.89	450.40	5433	4055	4	7.42	
	3.70	473.17	5433	4260	4	7.06	MW1084GH71C4
	3.40	515.41	5433	4641	4	6.48	
	3.20	546.18	5433	4918	4	6.12	
	2.93	596.76	5433	5373	4	5.60	
	2.70	649.15	5433	5845	4	5.15	
	2.63	665.33	5433	5990	4	5.02	
	2.48	706.17	5433	6358	4	4.73	
	2.34	746.31	5433	6719	4	4.48	
	2.24	780.09	5433	7024	4	4.28	
	2.13	820.62	5433	7389	4	4.07	
	1.99	880.97	5433	7932	4	3.79	
	1.84	949.40	5433	8548	4	3.52	
	1.73	1013.64	5433	9126	4	3.30	
	1.59	1099.25	5433	9897	4	3.04	
	1.48	1183.01	5433	10651	4	2.83	
	1.39	1260.63	5433	11350	4	2.65	
	1.33	1319.78	5433	11883	4	2.53	
	1.24	1416.03	5433	12749	4	2.36	
	1.19	1468.40	5433	13221	4	2.28	
	1.06	1652.71	5433	14880	4	2.02	
	1.01	1734.20	5433	15614	4	1.93	
	0.94	1868.90	5433	16827	4	1.79	
	0.89	1959.65	5433	17644	4	1.71	
	0.83	2111.86	5433	19014	4	1.58	
	0.80	2188.60	5433	19705	4	1.53	
	0.70	2486.57	5433	22388	4	1.34	
	0.68	2573.69	5433	23172	5	1.30	MW1085GH71C4
	0.62	2804.20	5433	25248	5	1.19	
	0.59	2944.27	5433	26509	5	1.14	
	0.56	3101.76	5433	27927	5	1.08	
	0.54	3230.33	5433	29085	5	1.03	
	0.50	3502.91	5433	30093	5	0.95	
	0.47	3726.73	5433	30093	5	0.90	
	0.45	3915.35	5433	30093	5	0.85	
	0.41	4237.98	5433	30093	5	0.79	MW1085GH71C4
	0.38	4600.83	5433	30093	5	0.73	
	0.35	4958.19	5433	30093	5	0.67	
	0.32	5509.55	5433	30093	5	0.61	
	0.28	6324.24	5433	30093	5	0.53	
	0.24	7155.31	5433	30093	5	0.47	

(B) - See footnotes page on inside back cover

MSM integral gearmotors

1750 RPM – 60 Hz

Input power (Hp)	Speed (RPM)	Ratio	OHL (LBF) (B)	Output torque (in-lb)	Gear stage	Service factor (SF)	Catalog number
0.25 (cont.)	7.02	249.31	6777	2245	4	24.05	MW1284GH71C4
	6.46	271.06	6777	2440	4	22.12	
	6.09	287.49	6777	2588	4	20.86	
	5.53	316.26	6777	2847	4	18.96	
	4.79	365.62	6777	3292	4	16.40	
	4.37	400.51	6777	3606	4	14.97	
	4.32	405.24	6777	3649	4	14.80	
	3.75	466.72	6777	4202	4	12.85	
	3.67	476.63	6777	4291	4	12.58	
	3.44	509.27	6777	4585	4	11.78	
	3.32	527.55	6777	4750	4	11.37	
	3.07	570.63	6777	5138	4	10.51	
	2.89	605.91	6777	5455	4	9.90	
	2.64	662.74	6777	5967	4	9.05	
	2.53	690.67	6777	6218	4	8.68	
	2.28	766.10	6777	6898	4	7.83	
	2.23	783.00	6777	7050	4	7.66	
	2.02	868.40	6777	7819	4	6.91	
	1.94	902.73	6777	8128	4	6.64	
	1.71	1020.55	6777	9189	4	5.88	
	1.49	1175.59	6777	10585	4	5.10	
	1.48	1185.58	6777	10674	4	5.06	
	1.37	1274.88	6777	11479	4	4.70	
	1.31	1335.16	6777	12021	4	4.49	
	1.20	1462.59	6777	13169	4	4.10	
	1.15	1520.48	6777	13690	4	3.94	
	1.01	1724.52	6777	15527	4	3.48	
	1.00	1751.48	6777	15770	4	3.42	
	0.87	2001.69	6777	18022	4	3.00	
	0.79	2220.12	6777	19989	4	2.70	MW1284GH71C4
	0.76	2289.91	6777	20617	4	2.62	
	0.71	2462.39	6777	22170	4	2.44	
	0.70	2494.22	6777	22457	5	2.40	MW1285GH71C4
	0.60	2915.15	6777	26247	5	2.06	
	0.53	3297.82	6777	29692	5	1.82	
	0.45	3868.84	6777	34833	5	1.55	
	0.41	4260.34	6777	38358	5	1.41	
	0.39	4433.15	6777	39914	5	1.35	
	0.35	4954.49	6777	44608	5	1.21	
	0.32	5476.83	6777	49311	5	1.09	
	0.31	5690.15	6777	51232	5	1.05	
	0.27	6364.36	6777	53991	5	0.94	
	0.25	6999.87	6777	53991	5	0.86	
	7.10	246.52	11478	2220	4	34.69	MW1484GH71C4
	6.72	260.27	11478	2343	4	32.86	
	6.14	285.02	11478	2566	4	30.01	
	5.87	298.38	11478	2686	4	28.66	
	5.30	330.30	11478	2974	4	25.89	
	5.17	338.27	11478	3046	4	25.28	
	4.79	365.49	11478	3291	4	23.40	
	4.57	383.10	11478	3449	4	22.32	
	4.09	427.73	11478	3851	4	20.00	
	4.01	436.57	11478	3931	4	19.59	
	3.62	483.09	11478	4350	4	17.70	
	3.56	490.94	11478	4420	4	17.42	
	3.38	517.02	11478	4655	4	16.54	
	3.12	560.48	11478	5046	4	15.26	
	2.96	592.18	11478	5332	4	14.44	
	2.75	635.41	11478	5721	4	13.46	
	2.50	699.28	11478	6296	4	12.23	
	2.38	733.96	11478	6608	4	11.65	
	2.18	803.25	11478	7232	4	10.65	
	2.09	839.04	11478	7554	4	10.19	

(B) - See footnotes page on inside back cover

MSM integral gearmotors

1750 RPM – 60 Hz

Input power (Hp)	Speed (RPM)	Ratio	OHL (LBF) (B)	Output torque (in-lb)	Gear stage	Service factor (SF)	Catalog number
0.25 (cont.)	1.89	924.27	11478	8322	4	9.25	MW1484GH71C4
	1.84	950.06	11478	8554	4	9.00	
	1.72	1020.01	11478	9184	4	8.38	
	1.61	1086.42	11478	9782	4	7.87	
	1.46	1199.92	11478	10804	4	7.13	
	1.41	1237.20	11478	11139	4	6.91	
	1.39	1258.33	11478	11329	4	6.80	
	1.25	1401.32	11478	12617	4	6.10	
	1.23	1426.47	11478	12843	4	6.00	
	1.10	1588.57	11478	14303	4	5.38	
	0.96	1815.51	11478	16346	4	4.71	
	0.94	1858.26	11478	16731	4	4.60	
	0.86	2043.12	11478	18395	4	4.19	
	0.81	2154.50	11478	19398	4	3.97	
	0.77	2266.07	11478	20403	4	3.77	
	0.73	2389.60	11478	21515	4	3.58	
	0.70	2513.36	11478	22629	4	3.40	
	0.68	2568.78	11478	23128	5	3.33	MW1485GH71C4
	0.64	2751.57	11478	24774	5	3.11	
	0.62	2828.98	11478	25471	5	3.02	
	0.58	3039.37	11478	27365	5	2.81	
	0.53	3328.54	11478	29969	5	2.57	
	0.49	3536.54	11478	31841	5	2.42	
	0.46	3838.36	11478	34559	5	2.23	
	0.44	3938.84	11478	35464	5	2.17	
	0.43	4037.27	11478	36350	5	2.12	
	0.41	4246.36	11478	38232	5	2.01	
	0.38	4581.97	11478	41254	5	1.87	
	0.34	5176.36	11478	46606	5	1.65	
	0.33	5377.37	11478	48415	5	1.59	
	0.30	5888.09	11478	53014	5	1.45	
	0.26	6674.88	11478	60098	5	1.28	
	0.25	6948.42	11478	62561	5	1.23	
	0.23	7511.69	11478	67632	5	1.14	
	5.61	312.03	20233	2809	4	42.22	MW1684GH71C4
	4.63	377.67	20233	3400	4	34.88	
	4.27	410.14	20233	3693	4	32.12	
	4.03	434.25	20233	3910	4	30.33	
	3.68	475.27	20233	4279	4	27.72	
	3.53	496.41	20233	4469	4	26.54	
	3.11	562.78	20233	5067	4	23.41	
	2.68	652.15	20233	5872	4	20.20	
	2.38	734.68	20233	6615	4	17.93	
	2.13	820.27	20233	7385	4	16.06	
	1.90	920.38	20233	8287	4	14.31	
	1.63	1075.86	20233	9687	4	12.24	
	1.44	1218.18	20233	10968	4	10.81	
	1.24	1407.54	20233	12673	4	9.36	
	1.09	1607.88	20233	14477	4	8.19	
	0.99	1761.33	20233	15858	4	7.48	
	0.84	2077.99	20233	18709	4	6.34	
	0.73	2396.62	20233	21578	4	5.50	
	0.74	2365.25	20233	21296	5	5.57	MW1685GH71C4
	0.65	2681.15	20233	24140	5	4.91	
	0.57	3071.05	20233	27650	5	4.29	
	0.52	3391.25	20233	30533	5	3.88	
	0.45	3929.85	20233	35383	5	3.35	
	0.38	4577.86	20233	41217	5	2.88	
	0.34	5173.66	20233	46581	5	2.55	
	0.29	6051.15	20233	54482	5	2.18	
	0.26	6716.72	20233	60474	5	1.96	
	0.25	7048.41	20233	63461	5	1.87	
	0.23	7670.23	20233	69059	5	1.72	

(B) - See footnotes page on inside back cover

MSM integral gearmotors

1750 RPM – 60 Hz

Input power (Hp)	Speed (RPM)	Ratio	OHL (LBF) (B)	Output torque (in-lb)	Gear stage	Service factor (SF)	Catalog number
	179	9.80	678	116	2	6.14	
	154	11.39	704	135	2	6.14	MW382GH71D4
	138	12.64	704	150	2	6.13	
	127	13.76	704	164	2	6.10	
	114	15.39	704	183	2	6.12	
	104	16.83	704	200	2	6.12	
	95	18.47	706	220	2	6.11	
	86	20.37	706	242	2	6.01	
	78	22.58	706	268	2	5.58	
	68	25.58	706	304	2	5.07	
	62	28.22	906	335	2	4.70	
	55	31.91	906	379	2	4.26	MW382GH71D4
	48	36.43	906	433	2	3.83	
	46	38.19	906	454	2	4.46	
	40	43.43	962	516	2	4.04	
	35	49.56	962	589	2	3.64	
	31	55.84	962	664	2	3.30	
	28	62.40	962	742	2	3.01	
	25	71.18	962	846	2	2.69	
	22	80.17	962	953	2	2.43	
	44	40.04	906	476	3	6.12	
	40	44.05	962	524	3	5.57	
	34	51.16	962	608	3	4.80	
	32	55.40	962	658	3	4.44	
	28	62.66	962	745	3	3.92	
	25	68.86	962	818	3	3.57	
	23	75.95	962	903	3	3.23	
0.33	21	84.13	962	1000	3	2.92	MW383GH71D4
	19	93.67	962	1113	3	2.62	
	16	107.49	962	1277	3	2.29	
	15	118.98	962	1414	3	2.07	
	13	135.32	962	1608	3	1.82	
	11	154.43	962	1835	3	1.59	
	10	173.99	962	2068	3	1.41	
	9	194.43	962	2311	3	1.26	
	8	221.77	962	2636	3	1.11	MW383GH71D4
	139	12.59	1098	150	2	6.10	
	124	14.11	1098	168	2	6.11	
	114	15.41	1098	183	2	6.12	
	105	16.63	1098	198	2	6.11	
	90	19.34	1135	230	2	6.11	
	82	21.46	1135	255	2	6.12	
	75	23.37	1135	278	2	6.11	
	67	26.14	1135	311	2	6.11	
	61	28.58	1334	340	2	6.11	
	56	31.36	1334	373	2	6.11	MW482GH71D4
	51	34.58	1334	411	2	6.00	
	46	38.33	1334	456	2	5.56	
	40	43.43	1334	516	2	5.07	
	37	47.92	1334	570	2	4.69	
	32	54.17	1334	644	2	4.26	
	28	61.86	1334	735	2	3.83	
	25	70.33	1334	836	2	3.44	
	23	75.27	1334	895	2	3.24	
	20	86.77	1334	1031	2	2.87	

(B) - See footnotes page on inside back cover

MSM integral gearmotors

1750 RPM – 60 Hz

Input power (Hp)	Speed (RPM)	Ratio	OHL (LBF) (B)	Output torque (in-lb)	Gear stage	Service factor (SF)	Catalog number
0.33 (cont.)	43	40.99	1334	487	3	6.12	MW483GH71D4
	37	47.66	1334	566	3	6.12	
	33	52.88	1334	628	3	6.12	
	30	57.59	1334	684	3	6.12	
	27	64.41	1334	765	3	6.12	
	25	70.42	1334	837	3	5.71	
	23	77.29	1334	919	3	5.20	
	21	85.22	1334	1013	3	4.72	
	19	94.46	1334	1123	3	4.26	
	16	107.02	1334	1272	3	3.76	
	15	118.08	1334	1403	3	3.41	
	13	133.50	1334	1587	3	3.01	
	11	152.43	1334	1812	3	2.64	
	10	173.31	1334	2060	3	2.32	
	9	185.49	1334	2204	3	2.17	
	8	213.83	1334	2541	3	1.88	
	118	14.8	2200	176	2	6.12	MW582GH71D4
	104	16.8	2200	200	2	6.12	
	97	17.96	2200	213	2	6.12	
	86	20.38	2200	242	2	6.12	
	80	21.98	2200	261	2	6.12	
	74	23.8	2200	283	2	6.12	
	68	25.88	2200	308	2	6.12	
	63	27.94	2200	332	2	6.12	
	58	30.29	2200	360	2	6.12	
	53	32.95	2200	392	2	6.12	
	49	36	2200	428	2	6.12	
	44	39.52	2200	470	2	6.12	
	40	43.62	2200	518	2	6.12	
	36	49.21	2200	585	2	6.12	
	32	54.12	2200	643	2	6.12	
	29	59.92	2200	712	2	6.12	
	25	70.27	2200	835	2	6.12	
	23	77.54	2200	922	2	6.12	
	20	86.26	2200	1025	2	6.12	
	37	47.88	2200	569	3	6.12	MW583GH71D4
	33	53.2	2200	632	3	6.12	
	29	61.18	2200	727	3	6.12	
	27	65.8	2200	782	3	6.12	
	23	76.67	2200	911	3	6.12	
	21	83.13	2200	988	3	6.12	
	19	90.44	2200	1075	3	6.12	
	18	98.8	2200	1174	3	5.85	
	16	108.45	2200	1289	3	5.3	
	15	119.7	2200	1423	3	4.81	
	13	135.05	2200	1605	3	4.27	
	12	148.52	2200	1765	3	3.88	
	11	164.44	2200	1954	3	3.52	
	9	192.85	2200	2292	3	3	
	8	212.8	2200	2529	3	2.7	
	7	236.74	2200	2814	3	2.42	
	120	14.59	2500	173	2	6.13	MW682GH71D4
	107	16.28	2500	193	2	6.13	
	99	17.64	2500	210	2	6.11	
	88	19.99	2500	238	2	6.11	
	81	21.54	2500	256	2	6.12	
	75	23.29	2500	277	2	6.11	
	65	26.75	2500	318	2	6.12	
	60	29.37	2500	349	2	6.12	
	54	32.34	2500	384	2	6.12	
	50	35.10	2500	417	2	6.12	
	46	38.25	2500	455	2	6.11	
	42	41.89	2500	498	2	5.95	
	38	46.14	2500	548	2	5.53	
	33	53.07	2500	631	2	4.94	
	30	57.49	2500	683	2	4.63	
	28	63.54	2500	755	2	4.26	
	24	74.13	2500	881	2	3.74	
	21	82.52	2500	981	2	3.40	

(B) - See footnotes page on inside back cover

MSM integral gearmotors

1750 RPM – 60 Hz

Input power (Hp)	Speed (RPM)	Ratio	OHL (LBF) (B)	Output torque (in-lb)	Gear stage	Service factor (SF)	Catalog number
0.33 (cont.)	30	59.29	2500	705	3	6.11	MW683GH71D4
	26	66.45	2500	790	3	6.12	
	24	72.54	2500	862	3	6.12	
	22	79.63	2500	946	3	6.12	
	20	87.68	2500	1042	3	6.12	
	18	95.16	2500	1131	3	6.12	
	17	103.72	2500	1233	3	6.12	
	15	113.59	2500	1350	3	5.95	
	14	125.11	2500	1487	3	5.51	
	12	143.88	2500	1710	3	4.92	
	11	155.87	2500	1852	3	4.61	
	10	172.28	2500	2047	3	4.25	
	9	200.99	2500	2389	3	3.70	
	8	223.74	2500	2659	3	3.33	
	6.82	256.48	2500	3048	4	2.90	MW684GH71D4
	6.39	273.93	2500	3256	4	2.72	
	6.24	280.25	2500	3331	4	2.66	
	5.93	294.95	2500	3505	4	2.52	
	5.43	322.29	2500	3830	4	2.31	
	4.87	359.70	2500	4275	4	2.07	
	4.71	371.83	2500	4419	4	2.00	
	4.23	414.11	2500	4922	4	1.80	
	4.05	431.64	2500	5130	4	1.73	
	3.89	450.22	2500	5351	4	1.65	
	3.67	476.24	2500	5660	4	1.56	
	3.39	516.84	2500	6142	4	1.44	
	3.19	548.70	2500	6521	4	1.36	
	3.07	570.25	2500	6777	4	1.31	
	2.71	646.86	2500	7688	4	1.15	
	2.71	646.86	2500	7688	4	1.15	
	2.63	665.28	2500	7907	4	1.12	
	2.35	745.30	2500	6710	4	1.00	
	2.13	821.13	2500	7393	4	0.91	
	2.05	851.77	2500	7669	4	0.87	
	1.96	892.41	2500	8035	4	0.83	
	1.90	920.53	2500	8288	4	0.81	
	1.81	968.31	2500	8718	4	0.77	
	20	87.25	3611	1037	3	6.12	MW883GH71D4
	18	97.39	3611	1157	3	6.12	
	17	105.48	3611	1254	3	6.12	
	15	119.55	3611	1421	3	6.12	
	14	128.79	3611	1531	3	6.12	
	13	139.26	3611	1655	3	6.02	
	12	151.22	3611	1797	3	5.64	
	10	167.20	3611	1987	3	5.20	
	10	181.13	3611	2153	3	4.87	
	9	204.11	3611	2426	3	4.41	
	8	223.47	3611	2656	3	4.09	
	7	248.92	3611	2958	3	3.73	
	6	284.63	3611	3383	3	3.31	
	6	315.64	3611	3751	3	3.02	
	5	350.03	3611	4160	3	2.76	

(B) - See footnotes page on inside back cover

MSM integral gearmotors

1750 RPM – 60 Hz

Input power (Hp)	Speed (RPM)	Ratio	OHL (LBF) (B)	Output torque (in-lb)	Gear stage	Service factor (SF)	Catalog number
0.33 (cont.)	5.12	341.76	3611	4062	4	4.14	MW884GH71D4
	4.80	364.44	3611	4331	4	3.88	
	4.26	410.82	3611	4882	4	3.44	
	4.11	425.60	3611	5058	4	3.32	
	3.59	487.32	3611	5792	4	2.90	
	3.25	538.94	3611	6405	4	2.63	
	3.07	569.73	3611	6771	4	2.48	
	2.84	617.06	3611	7334	4	2.29	
	2.65	659.24	3611	7835	4	2.15	
	2.47	707.44	3611	8408	4	2.00	
	2.27	772.46	3611	9181	4	1.83	
	2.15	814.67	3611	9682	4	1.74	
	1.97	886.16	3611	10532	4	1.60	
	1.90	920.14	3611	10936	4	1.54	
	1.73	1013.28	3611	12043	4	1.40	
	1.66	1052.21	3611	12505	4	1.34	
	1.49	1170.70	3611	13913	4	1.21	
	1.43	1221.53	3611	14517	4	1.16	
	1.35	1292.02	3611	15355	4	1.10	
	1.29	1354.62	3611	16099	4	1.04	
	1.22	1428.77	3611	12864	4	0.99	
	1.15	1519.85	3611	13684	4	0.93	
	1.08	1617.14	3611	14560	4	0.88	
	1.05	1672.00	3611	15054	4	0.85	
	0.98	1778.15	3611	16010	4	0.80	
	6.86	255.20	5433	3033	4	9.92	MW1084GH71D4
	6.28	278.83	5433	3314	4	9.08	
	5.81	301.21	5433	3580	4	8.41	
	5.49	318.85	5433	3789	4	7.94	
	5.32	329.10	5433	3911	4	7.69	
	4.97	351.96	5433	4183	4	7.19	
	4.41	397.15	5433	4720	4	6.38	
	3.89	450.40	5433	5353	4	5.62	
	3.70	473.17	5433	5623	4	5.35	
	3.40	515.41	5433	6125	4	4.91	
	3.20	546.18	5433	6491	4	4.64	
	2.93	596.76	5433	7092	4	4.24	
	2.70	649.15	5433	7715	4	3.90	
	2.63	665.33	5433	7907	4	3.81	
	2.48	706.17	5433	8393	4	3.59	
	2.34	746.31	5433	8870	4	3.39	
	2.24	780.09	5433	9271	4	3.25	
	2.13	820.62	5433	9753	4	3.09	
	1.99	880.97	5433	10470	4	2.87	
	1.84	949.40	5433	11283	4	2.67	
	1.73	1013.64	5433	12047	4	2.50	
	1.59	1099.25	5433	13064	4	2.30	
	1.48	1183.01	5433	14060	4	2.14	
	1.39	1260.63	5433	14982	4	2.01	
	1.33	1319.78	5433	15685	4	1.92	
	1.24	1416.03	5433	16829	4	1.79	
	1.19	1468.40	5433	17451	4	1.72	
	1.06	1652.71	5433	19642	4	1.53	
	1.01	1734.20	5433	20610	4	1.46	
	0.94	1868.90	5433	22211	4	1.35	
	0.89	1959.65	5433	23290	4	1.29	
	0.83	2111.86	5433	25099	4	1.20	
	0.80	2188.60	5433	26011	4	1.16	
	0.70	2486.57	5433	29552	4	1.02	
	0.68	2573.69	5433	23172	5	0.98	MW1085GH71D4
	0.62	2804.20	5433	25248	5	0.90	
	0.59	2944.27	5433	26509	5	0.86	
	0.56	3101.76	5433	27927	5	0.82	
	0.54	3230.33	5433	29085	5	0.78	

(B) - See footnotes page on inside back cover

MSM integral gearmotors

1750 RPM – 60 Hz

Input power (Hp)	Speed (RPM)	Ratio	OHL (LBF) (B)	Output torque (in-lb)	Gear stage	Service factor (SF)	Catalog number
0.33 (cont.)	7.02	249.31	6777	2963	4	18.22	MW1284GH71D4
	6.46	271.06	6777	3221	4	16.76	
	6.09	287.49	6777	3417	4	15.80	
	5.53	316.26	6777	3759	4	14.36	
	4.79	365.62	6777	4345	4	12.43	
	4.37	400.51	6777	4760	4	11.34	
	4.32	405.24	6777	4816	4	11.21	
	3.75	466.72	6777	5547	4	9.73	MW1284GH71D4
	3.67	476.63	6777	5665	4	9.53	
	3.44	509.27	6777	6052	4	8.92	
	3.32	527.55	6777	6270	4	8.61	
	3.07	570.63	6777	6782	4	7.96	
	2.89	605.91	6777	7201	4	7.50	
	2.64	662.74	6777	7877	4	6.85	
	2.53	690.67	6777	8208	4	6.58	
	2.28	766.10	6777	9105	4	5.93	
	2.23	783.00	6777	9306	4	5.80	
	2.02	868.40	6777	10321	4	5.23	
	1.94	902.73	6777	10729	4	5.03	
	1.71	1020.55	6777	12129	4	4.45	
	1.49	1175.59	6777	13972	4	3.86	
	1.48	1185.58	6777	14090	4	3.83	
	1.37	1274.88	6777	15152	4	3.56	
	1.31	1335.16	6777	15868	4	3.40	
	1.20	1462.59	6777	17382	4	3.11	
	1.15	1520.48	6777	18070	4	2.99	
	1.01	1724.52	6777	20495	4	2.63	
	1.00	1751.48	6777	20816	4	2.59	
	0.87	2001.69	6777	23789	4	2.27	
	0.79	2220.12	6777	26386	4	2.05	
	0.76	2289.91	6777	27215	4	1.98	
	0.71	2462.39	6777	29265	4	1.84	
	0.70	2494.22	6777	29643	5	1.82	MW1285GH71D4
	0.60	2915.15	6777	34646	5	1.56	
	0.53	3297.82	6777	39194	5	1.38	
	0.45	3868.84	6777	45980	5	1.17	
	0.41	4260.34	6777	50633	5	1.07	
	0.39	4433.15	6777	52687	5	1.02	
	0.35	4954.49	6777	44608	5	0.92	
	0.32	5476.83	6777	49311	5	0.83	
	0.31	5690.15	6777	51232	5	0.80	

(B) - See footnotes page on inside back cover

MSM integral gearmotors

1750 RPM – 60 Hz

Input power (Hp)	Speed (RPM)	Ratio	OHL (LBF) (B)	Output torque (in-lb)	Gear stage	Service factor (SF)	Catalog number
	7.10	246.52	11478	2930	4	26.28	
	6.72	260.27	11478	3093	4	24.89	
	6.14	285.02	11478	3387	4	22.73	
	5.87	298.38	11478	3546	4	21.71	
	5.30	330.30	11478	3926	4	19.62	
	5.17	338.27	11478	4020	4	19.15	
	4.79	365.49	11478	4344	4	17.73	
	4.57	383.10	11478	4553	4	16.91	
	4.09	427.73	11478	5083	4	15.15	
	4.01	436.57	11478	5189	4	14.84	
	3.62	483.09	11478	5741	4	13.41	
	3.56	490.94	11478	5835	4	13.20	
	3.38	517.02	11478	6145	4	12.53	
	3.12	560.48	11478	6661	4	11.56	
	2.96	592.18	11478	7038	4	10.94	
	2.75	635.41	11478	7552	4	10.20	
	2.50	699.28	11478	8311	4	9.27	
	2.38	733.96	11478	8723	4	8.83	
	2.18	803.25	11478	9546	4	8.07	**MW1484GH71D4**
	2.09	839.04	11478	9972	4	7.72	
	1.89	924.27	11478	10985	4	7.01	
	1.84	950.06	11478	11291	4	6.82	
	1.72	1020.01	11478	12123	4	6.35	
	1.61	1086.42	11478	12912	4	5.96	
	1.46	1199.92	11478	14261	4	5.40	
	1.41	1237.20	11478	14704	4	5.24	
0.33 (cont.)	1.39	1258.33	11478	14955	4	5.15	
	1.25	1401.32	11478	16654	4	4.62	
	1.23	1426.47	11478	16953	4	4.54	
	1.10	1588.57	11478	18880	4	4.08	
	0.96	1815.51	11478	21577	4	3.57	
	0.94	1858.26	11478	22085	4	3.49	
	0.86	2043.12	11478	24282	4	3.17	
	0.81	2154.50	11478	25606	4	3.01	
	0.77	2266.07	11478	26932	4	2.86	
	0.73	2389.60	11478	28400	4	2.71	
	0.70	2513.36	11478	29871	4	2.58	
	0.68	2568.78	11478	30529	5	2.52	
	0.64	2751.57	11478	32702	5	2.35	
	0.62	2828.98	11478	33622	5	2.29	
	0.58	3039.37	11478	36122	5	2.13	
	0.53	3328.54	11478	39559	5	1.95	
	0.49	3536.54	11478	42031	5	1.83	
	0.46	3838.36	11478	45618	5	1.69	
	0.44	3938.84	11478	46812	5	1.64	
	0.43	4037.27	11478	47982	5	1.60	**MW1485GH71D4**
	0.41	4246.36	11478	50467	5	1.53	
	0.38	4581.97	11478	54455	5	1.41	
	0.34	5176.36	11478	61520	5	1.25	
	0.33	5377.37	11478	63908	5	1.20	
	0.30	5888.09	11478	69978	5	1.10	
	0.26	6674.88	11478	60098	5	0.97	
	0.25	6948.42	11478	62561	5	0.93	
	0.23	7511.69	11478	67632	5	0.86	

(B) - See footnotes page on inside back cover

MSM integral gearmotors

1750 RPM – 60 Hz

Input power (Hp)	Speed (RPM)	Ratio	OHL (LBF) (B)	Output torque (in-lb)	Gear stage	Service factor (SF)	Catalog number
0.33 (cont.)	5.61	312.03	20233	3708	4	31.98	MW1684GH71D4
	4.63	377.67	20233	4488	4	26.42	
	4.27	410.14	20233	4874	4	24.33	
	4.03	434.25	20233	5161	4	22.98	
	3.68	475.27	20233	5648	4	21.00	
	3.53	496.41	20233	5900	4	20.10	
	3.11	562.78	20233	6688	4	17.73	
	2.68	652.15	20233	7751	4	15.30	
	2.38	734.68	20233	8731	4	13.58	
	2.13	820.27	20233	9749	4	12.17	
	1.90	920.38	20233	10938	4	10.84	
	1.63	1075.86	20233	12786	4	9.28	
	1.44	1218.18	20233	14478	4	8.19	
	1.24	1407.54	20233	16728	4	7.09	
	1.09	1607.88	20233	19109	4	6.21	
	0.99	1761.33	20233	20933	4	5.67	
	0.84	2077.99	20233	24696	4	4.80	
	0.73	2396.62	20233	28483	4	4.16	
	0.74	2365.25	20233	28110	5	4.22	MW1685GH71D4
	0.65	2681.15	20233	31865	5	3.72	
	0.57	3071.05	20233	36499	5	3.25	
	0.52	3391.25	20233	40304	5	2.94	
	0.45	3929.85	20233	46705	5	2.54	
	0.38	4577.86	20233	54407	5	2.18	
	0.34	5173.66	20233	61487	5	1.93	
	0.29	6051.15	20233	71916	5	1.65	
	0.26	6716.72	20233	79826	5	1.49	
	0.25	7048.41	20233	83768	5	1.42	
	0.23	7670.23	20233	91159	5	1.30	
0.5	179	9.80	678	176	2	4.05	MW382GH71E4
	154	11.39	704	205	2	4.04	
	138	12.64	704	228	2	4.03	
	127	13.76	704	248	2	4.04	
	114	15.39	704	277	2	4.04	
	104	16.83	704	303	2	4.04	
	95	18.47	706	333	2	4.03	
	86	20.37	706	367	2	3.96	
	78	22.58	706	407	2	3.67	
	68	25.58	706	461	2	3.34	
	62	28.22	906	508	2	3.10	
	55	31.91	906	575	2	2.81	
	48	36.43	906	656	2	2.52	
	46	38.19	906	688	2	2.94	
	40	43.43	962	782	2	2.67	
	35	49.56	962	892	2	2.40	
	31	55.84	962	1006	2	2.18	
	28	62.40	962	1124	2	1.99	
	25	71.18	962	1282	2	1.78	
	22	80.17	962	1444	2	1.60	
	44	40.04	906	721	3	4.04	MW383GH71E4
	40	44.05	962	793	3	3.68	
	34	51.16	962	921	3	3.17	
	32	55.40	962	998	3	2.93	
	28	62.66	962	1128	3	2.59	
	25	68.86	962	1240	3	2.36	
	23	75.95	962	1368	3	2.14	
	21	84.13	962	1515	3	1.93	
	19	93.67	962	1687	3	1.73	
	16	107.49	962	1936	3	1.51	
	15	118.98	962	2142	3	1.36	
	13	135.32	962	2437	3	1.20	
	11	154.43	962	2781	3	1.05	

(B) - See footnotes page on inside back cover

MSM integral gearmotors

1750 RPM – 60 Hz

Input power (Hp)	Speed (RPM)	Ratio	OHL (LBF) (B)	Output torque (in-lb)	Gear stage	Service factor (SF)	Catalog number
0.5 (cont.)	139	12.59	1098	227	2	4.03	MW482GH71E4
	124	14.11	1098	254	2	4.04	
	114	15.41	1098	277	2	4.04	
	105	16.63	1098	299	2	4.04	
	90	19.34	1135	348	2	4.04	
	82	21.46	1135	386	2	4.04	
	75	23.37	1135	421	2	4.04	
	67	26.14	1135	471	2	4.03	
	61	28.58	1334	515	2	4.03	
	56	31.36	1334	565	2	4.04	
	51	34.58	1334	623	2	3.96	
	46	38.33	1334	690	2	3.68	
	40	43.43	1334	782	2	3.34	
	37	47.92	1334	863	2	3.10	
	32	54.17	1334	975	2	2.81	
	28	61.86	1334	1114	2	2.52	
	25	70.33	1334	1266	2	2.27	
	23	75.27	1334	1355	2	2.14	
	20	86.77	1334	1562	2	1.90	
	43	40.99	1334	738	3	4.04	MW483GH71E4
	37	47.66	1334	858	3	4.04	
	33	52.88	1334	952	3	4.04	
	30	57.59	1334	1037	3	4.04	
	27	64.41	1334	1160	3	4.04	
	25	70.42	1334	1268	3	3.77	
	23	77.29	1334	1392	3	3.43	
	21	85.22	1334	1535	3	3.11	
	19	94.46	1334	1701	3	2.81	
	16	107.02	1334	1927	3	2.48	
	15	118.08	1334	2126	3	2.25	
	13	133.50	1334	2404	3	1.99	
	11	152.43	1334	2745	3	1.74	
	10	173.31	1334	3121	3	1.53	
	9	185.49	1334	3340	3	1.43	
	8	213.83	1334	3850	3	1.24	
	118	14.8	2200	267	2	4.04	MW582GH71E4
	104	16.8	2200	303	2	4.04	
	97	17.96	2200	323	2	4.04	
	86	20.38	2200	367	2	4.04	
	80	21.98	2200	396	2	4.04	
	74	23.8	2200	429	2	4.04	
	68	25.88	2200	466	2	4.04	
	63	27.94	2200	503	2	4.04	
	58	30.29	2200	545	2	4.04	
	53	32.95	2200	593	2	4.04	
	49	36	2200	648	2	4.04	
	44	39.52	2200	712	2	4.04	
	40	43.62	2200	785	2	4.04	
	36	49.21	2200	886	2	4.04	
	32	54.12	2200	975	2	4.04	
	29	59.92	2200	1079	2	4.04	
	25	70.27	2200	1265	2	4.04	
	23	77.54	2200	1396	2	4.04	
	20	86.26	2200	1553	2	4.04	
	37	47.88	2200	862	3	4.04	MW583GH71E4
	33	53.2	2200	958	3	4.04	
	29	61.18	2200	1102	3	4.04	
	27	65.8	2200	1185	3	4.04	
	23	76.67	2200	1381	3	4.04	
	21	83.13	2200	1497	3	4.04	
	19	90.44	2200	1629	3	4.04	
	18	98.8	2200	1779	3	3.86	
	16	108.45	2200	1953	3	3.5	
	15	119.7	2200	2155	3	3.18	
	13	135.05	2200	2432	3	2.82	
	12	148.52	2200	2674	3	2.56	
	11	164.44	2200	2961	3	2.32	
	9	192.85	2200	3473	3	1.98	
	8	212.8	2200	3832	3	1.78	
	7	236.74	2200	4263	3	1.6	

MSM integral gearmotors

1750 RPM – 60 Hz

Input power (Hp)	Speed (RPM)	Ratio	OHL (LBF) (B)	Output torque (in-lb)	Gear stage	Service factor (SF)	Catalog number
0.5 (cont.)	120	14.59	2500	263	2	4.03	MW682GH71E4
	107	16.28	2500	293	2	4.04	
	99	17.64	2500	318	2	4.03	
	88	19.99	2500	360	2	4.04	
	81	21.54	2500	388	2	4.04	
	75	23.29	2500	419	2	4.04	
	65	26.75	2500	482	2	4.04	
	60	29.37	2500	529	2	4.04	
	54	32.34	2500	582	2	4.04	
	50	35.10	2500	632	2	4.04	
	46	38.25	2500	689	2	4.04	
	42	41.89	2500	754	2	3.93	
	38	46.14	2500	831	2	3.64	
	33	53.07	2500	956	2	3.26	
	30	57.49	2500	1035	2	3.05	
	28	63.54	2500	1144	2	2.81	
	24	74.13	2500	1335	2	2.47	
	21	82.52	2500	1486	2	2.25	
	30	59.29	2500	1068	3	4.04	MW683GH71E4
	26	66.45	2500	1197	3	4.04	
	24	72.54	2500	1306	3	4.04	
	22	79.63	2500	1434	3	4.04	
	20	87.68	2500	1579	3	4.04	
	18	95.16	2500	1714	3	4.04	
	17	103.72	2500	1868	3	4.04	
	15	113.59	2500	2045	3	3.93	
	14	125.11	2500	2253	3	3.63	
	12	143.88	2500	2591	3	3.25	
	11	155.87	2500	2807	3	3.04	
	10	172.28	2500	3102	3	2.80	
	9	200.99	2500	3619	3	2.45	
	8	223.74	2500	4029	3	2.20	
	6.82	256.48	2500	4618	4	1.92	MW684GH71E4
	6.39	273.93	2500	4933	4	1.79	
	6.24	280.25	2500	5046	4	1.75	
	5.93	294.95	2500	5311	4	1.67	
	5.43	322.29	2500	5804	4	1.53	
	4.87	359.70	2500	6477	4	1.37	
	4.71	371.83	2500	6696	4	1.32	
	4.23	414.11	2500	7457	4	1.19	
	4.05	431.64	2500	7773	4	1.14	
	3.89	450.22	2500	8107	4	1.09	
	3.67	476.24	2500	8576	4	1.03	
	3.39	516.84	2500	8851	4	0.95	
	3.19	548.70	2500	8851	4	0.90	
	3.07	570.25	2500	8851	4	0.86	
	2.71	646.86	2500	8851	4	0.76	
	2.71	646.86	2500	8851	4	0.76	
	2.63	665.28	2500	8851	4	0.74	
	2.35	745.30	2500	8851	4	0.66	
	20	87.25	3611	1571	3	4.04	MW883GH71E4
	18	97.39	3611	1754	3	4.04	
	17	105.48	3611	1899	3	4.04	
	15	119.55	3611	2153	3	4.04	
	14	128.79	3611	2319	3	4.04	
	13	139.26	3611	2508	3	3.97	
	12	151.22	3611	2723	3	3.72	
	10	167.20	3611	3011	3	3.43	
	10	181.13	3611	3262	3	3.22	
	9	204.11	3611	3675	3	2.91	
	8	223.47	3611	4024	3	2.70	
	7	248.92	3611	4482	3	2.46	
	6	284.63	3611	5125	3	2.19	
	6	315.64	3611	5684	3	2.00	
	5	350.03	3611	6303	3	1.82	

(B) - See footnotes page on inside back cover

MSM integral gearmotors

1750 RPM – 60 Hz

Input power (Hp)	Speed (RPM)	Ratio	OHL (LBF) (B)	Output torque (in-lb)	Gear stage	Service factor (SF)	Catalog number
0.5 (cont.)	5.12	341.76	3611	6154	4	2.73	MW884GH71E4
	4.80	364.44	3611	6563	4	2.56	
	4.26	410.82	3611	7398	4	2.27	
	4.11	425.60	3611	7664	4	2.19	
	3.59	487.32	3611	8775	4	1.92	
	3.25	538.94	3611	9705	4	1.73	
	3.07	569.73	3611	10259	4	1.64	
	2.84	617.06	3611	11111	4	1.51	
	2.65	659.24	3611	11871	4	1.42	
	2.47	707.44	3611	12739	4	1.32	
	2.27	772.46	3611	13910	4	1.21	
	2.15	814.67	3611	14670	4	1.15	
	1.97	886.16	3611	15957	4	1.05	
	1.90	920.14	3611	16569	4	1.01	
	1.73	1013.28	3611	16817	4	0.92	
	1.66	1052.21	3611	16817	4	0.89	
	1.49	1170.70	3611	16817	4	0.80	
	1.43	1221.53	3611	16817	4	0.76	
	1.35	1292.02	3611	16817	4	0.72	
	1.29	1354.62	3611	16817	4	0.69	
	6.86	255.20	5433	4595	4	6.55	MW1084GH71E4
	6.28	278.83	5433	5021	4	5.99	
	5.81	301.21	5433	5424	4	5.55	
	5.49	318.85	5433	5742	4	5.24	
	5.32	329.10	5433	5926	4	5.08	
	4.97	351.96	5433	6338	4	4.75	
	4.41	397.15	5433	7152	4	4.21	
	3.89	450.40	5433	8111	4	3.71	
	3.70	473.17	5433	8520	4	3.53	
	3.40	515.41	5433	9281	4	3.24	
	3.20	546.18	5433	9835	4	3.06	
	2.93	596.76	5433	10746	4	2.80	
	2.70	649.15	5433	11689	4	2.57	
	2.63	665.33	5433	11981	4	2.51	
	2.48	706.17	5433	12716	4	2.37	
	2.34	746.31	5433	13439	4	2.24	
	2.24	780.09	5433	14047	4	2.14	
	2.13	820.62	5433	14777	4	2.04	
	1.99	880.97	5433	15864	4	1.90	
	1.84	949.40	5433	17096	4	1.76	
	1.73	1013.64	5433	18253	4	1.65	
	1.59	1099.25	5433	19794	4	1.52	
	1.48	1183.01	5433	21303	4	1.41	
	1.39	1260.63	5433	22700	4	1.33	
	1.33	1319.78	5433	23765	4	1.27	
	1.24	1416.03	5433	25499	4	1.18	
	1.19	1468.40	5433	26442	4	1.14	
	1.06	1652.71	5433	29761	4	1.01	
	1.01	1734.20	5433	30093	4	0.96	
	0.94	1868.90	5433	30093	4	0.89	
	0.89	1959.65	5433	30093	4	0.85	
	0.83	2111.86	5433	30093	4	0.79	
	0.80	2188.60	5433	30093	4	0.76	
	0.70	2486.57	5433	30093	4	0.67	

(B) - See footnotes page on inside back cover

MSM integral gearmotors

1750 RPM – 60 Hz

Input power (Hp)	Speed (RPM)	Ratio	OHL (LBF) (B)	Output torque (in-lb)	Gear stage	Service factor (SF)	Catalog number
0.5 (cont.)	7.02	249.31	6777	4489	4	12.03	MW1284GH71E4
	6.46	271.06	6777	4881	4	11.06	
	6.09	287.49	6777	5177	4	10.43	
	5.53	316.26	6777	5695	4	9.48	
	4.79	365.62	6777	6584	4	8.20	
	4.37	400.51	6777	7212	4	7.49	
	4.32	405.24	6777	7297	4	7.40	
	3.75	466.72	6777	8404	4	6.42	
	3.67	476.63	6777	8583	4	6.29	
	3.44	509.27	6777	9170	4	5.89	
	3.32	527.55	6777	9500	4	5.68	
	3.07	570.63	6777	10275	4	5.25	
	2.89	605.91	6777	10911	4	4.95	
	2.64	662.74	6777	11934	4	4.52	
	2.53	690.67	6777	12437	4	4.34	
	2.28	766.10	6777	13795	4	3.91	
	2.23	783.00	6777	14100	4	3.83	
	2.02	868.40	6777	15637	4	3.45	
	1.94	902.73	6777	16256	4	3.32	
	1.71	1020.55	6777	18377	4	2.94	
	1.49	1175.59	6777	21169	4	2.55	
	1.48	1185.58	6777	21349	4	2.53	
	1.37	1274.88	6777	22957	4	2.35	
	1.31	1335.16	6777	24042	4	2.25	
	1.20	1462.59	6777	26337	4	2.05	
	1.15	1520.48	6777	27379	4	1.97	
	1.01	1724.52	6777	31054	4	1.74	
	1.00	1751.48	6777	31539	4	1.71	
	0.87	2001.69	6777	36045	4	1.50	
	0.79	2220.12	6777	39978	4	1.35	
	0.76	2289.91	6777	41235	4	1.31	
	0.71	2462.39	6777	44341	4	1.22	
	0.70	2494.22	6777	44914	5	1.20	MW1285GH71E4
	0.60	2915.15	6777	52494	5	1.03	
	0.53	3297.82	6777	53991	5	0.91	
	0.45	3868.84	6777	53991	5	0.77	
	0.41	4260.34	6777	53991	5	0.70	
	0.39	4433.15	6777	53991	5	0.68	
	7.10	246.52	11478	4439	4	17.35	MW1484GH71E4
	6.72	260.27	11478	4687	4	16.43	
	6.14	285.02	11478	5132	4	15.00	
	5.87	298.38	11478	5373	4	14.33	
	5.30	330.30	11478	5948	4	12.95	
	5.17	338.27	11478	6091	4	12.64	
	4.79	365.49	11478	6581	4	11.70	
	4.57	383.10	11478	6899	4	11.16	
	4.09	427.73	11478	7702	4	10.00	
	4.01	436.57	11478	7861	4	9.80	
	3.62	483.09	11478	8699	4	8.85	
	3.56	490.94	11478	8840	4	8.71	
	3.38	517.02	11478	9310	4	8.27	
	3.12	560.48	11478	10093	4	7.63	
	2.96	592.18	11478	10663	4	7.22	
	2.75	635.41	11478	11442	4	6.73	
	2.50	699.28	11478	12592	4	6.12	
	2.38	733.96	11478	13217	4	5.83	
	2.18	803.25	11478	14464	4	5.32	
	2.09	839.04	11478	15109	4	5.10	
	1.89	924.27	11478	16643	4	4.63	
	1.84	950.06	11478	17108	4	4.50	
	1.72	1020.01	11478	18367	4	4.19	
	1.61	1086.42	11478	19563	4	3.94	
	1.46	1199.92	11478	21607	4	3.56	
	1.41	1237.20	11478	22278	4	3.46	
	1.39	1258.33	11478	22659	4	3.40	
	1.25	1401.32	11478	25234	4	3.05	
	1.23	1426.47	11478	25687	4	3.00	
	1.10	1588.57	11478	28606	4	2.69	
	0.96	1815.51	11478	32692	4	2.36	

(B) - See footnotes page on inside back cover

MSM integral gearmotors

1750 RPM – 60 Hz

Input power (Hp)	Speed (RPM)	Ratio	OHL (LBF) (B)	Output torque (in-lb)	Gear stage	Service factor (SF)	Catalog number
0.5 (cont.)	0.94	1858.26	11478	33462	4	2.30	MW1484GH71E4
	0.86	2043.12	11478	36791	4	2.09	
	0.81	2154.50	11478	38796	4	1.98	
	0.77	2266.07	11478	40806	4	1.89	
	0.73	2389.60	11478	43030	4	1.79	
	0.70	2513.36	11478	45258	4	1.70	
	0.68	2568.78	11478	46256	5	1.66	MW1485GH71E4
	0.64	2751.57	11478	49548	5	1.55	
	0.62	2828.98	11478	50942	5	1.51	
	0.58	3039.37	11478	54730	5	1.41	
	0.53	3328.54	11478	59937	5	1.28	
	0.49	3536.54	11478	63683	5	1.21	
	0.46	3838.36	11478	69118	5	1.11	
	0.44	3938.84	11478	70927	5	1.09	
	0.43	4037.27	11478	72700	5	1.06	
	0.41	4246.36	11478	76465	5	1.01	
	0.38	4581.97	11478	77004	5	0.93	
	0.34	5176.36	11478	77004	5	0.83	
	0.33	5377.37	11478	77004	5	0.80	
	0.30	5888.09	11478	77004	5	0.73	
0.75	5.61	312.03	20233	5619	4	21.11	MW1684GH71E4
	4.63	377.67	20233	6801	4	17.44	
	4.27	410.14	20233	7385	4	16.06	
	4.03	434.25	20233	7820	4	15.17	
	3.68	475.27	20233	8558	4	13.86	
	3.53	496.41	20233	8939	4	13.27	
	3.11	562.78	20233	10134	4	11.70	
	2.68	652.15	20233	11743	4	10.10	
	2.38	734.68	20233	13229	4	8.97	
	2.13	820.27	20233	14771	4	8.03	
	1.90	920.38	20233	16573	4	7.16	
	1.63	1075.86	20233	19373	4	6.12	
	1.44	1218.18	20233	21936	4	5.41	
	1.24	1407.54	20233	25346	4	4.68	
	1.09	1607.88	20233	28953	4	4.10	
	0.99	1761.33	20233	31716	4	3.74	
	0.84	2077.99	20233	37419	4	3.17	
	0.73	2396.62	20233	43156	4	2.75	
	0.74	2365.25	20233	42591	5	2.78	MW1685GH71E4
	0.65	2681.15	20233	48280	5	2.46	
	0.57	3071.05	20233	55301	5	2.14	
	0.52	3391.25	20233	61067	5	1.94	
	0.45	3929.85	20233	70765	5	1.68	
	0.38	4577.86	20233	82434	5	1.44	
	0.34	5173.66	20233	93163	5	1.27	
	0.29	6051.15	20233	108964	5	1.09	
	0.26	6716.72	20233	118603	5	0.98	
	0.25	7048.41	20233	118603	5	0.93	
	0.23	7670.23	20233	118603	5	0.86	
	179	9.80	678	265	2	3.28	MW382GH80F4
	154	11.39	704	308	2	3.28	
	138	12.64	704	341	2	3.28	
	127	13.76	704	372	2	3.28	
	114	15.39	704	416	2	3.28	
	104	16.83	704	455	2	3.28	
	95	18.47	706	499	2	3.28	
	86	20.37	706	550	2	3.28	
	78	22.58	706	610	2	3.28	
	68	25.58	706	691	2	3.28	
	62	28.22	906	762	2	3.16	
	55	31.91	906	862	2	2.95	
	48	36.43	906	984	2	2.71	
	46	38.19	906	1032	2	2.57	
	40	43.43	962	1173	2	2.27	
	35	49.56	962	1339	2	1.99	
	31	55.84	962	1508	2	1.76	
	28	62.40	962	1685	2	1.57	
	25	71.18	962	1923	2	1.39	

(B) - See footnotes page on inside back cover

MSM integral gearmotors

1750 RPM – 60 Hz

Input power (Hp)	Speed (RPM)	Ratio	OHL (LBF) (B)	Output torque (in-lb)	Gear stage	Service factor (SF)	Catalog number
0.75 (cont.)	44	40.04	906	1082	3	2.71	MW383GH80F4
	40	44.05	962	1190	3	2.45	
	34	51.16	962	1382	3	2.12	
	32	55.40	962	1496	3	1.95	
	28	62.66	962	1692	3	1.73	
	25	68.86	962	1860	3	1.57	
	23	75.95	962	2051	3	1.42	
	21	84.13	962	2272	3	1.29	
	19	93.67	962	2530	3	1.15	
	16	107.49	962	2903	3	1.01	
	220	7.95	1025	215	2	3.28	MW482GH80F4
	183	9.55	1025	258	2	3.28	
	156	11.24	1098	304	2	3.28	
	139	12.59	1098	340	2	3.28	
	124	14.11	1098	381	2	3.28	
	114	15.41	1098	416	2	3.28	
	105	16.63	1098	449	2	3.28	
	90	19.34	1135	522	2	3.28	
	82	21.46	1135	580	2	3.28	
	75	23.37	1135	631	2	3.28	
	67	26.14	1135	706	2	3.28	
	61	28.58	1334	772	2	3.28	
	56	31.36	1334	847	2	3.28	
	51	34.58	1334	934	2	3.28	
	46	38.33	1334	1035	2	3.28	
	40	43.43	1334	1173	2	3.28	
	37	47.92	1334	1294	2	3.16	
	32	54.17	1334	1463	2	2.91	
	28	61.86	1334	1671	2	2.55	
	25	70.33	1334	1900	2	2.24	
	23	75.27	1334	2033	2	2.09	
	20	86.77	1334	2344	2	1.81	
	43	40.99	1334	1107	3	3.28	MW483GH80F4
	37	47.66	1334	1287	3	3.28	
	33	52.88	1334	1428	3	3.19	
	30	57.59	1334	1556	3	3.01	
	27	64.41	1334	1740	3	2.75	
	25	70.42	1334	1902	3	2.51	
	23	77.29	1334	2088	3	2.29	
	21	85.22	1334	2302	3	2.08	
	19	94.46	1334	2551	3	1.87	
	16	107.02	1334	2891	3	1.65	
	15	118.08	1334	3189	3	1.50	
	13	133.50	1334	3606	3	1.33	
	11	152.43	1334	4117	3	1.16	
	10	173.31	1334	4681	3	1.02	
	177	9.87	2200	267	2	3.28	MW582GH80G4
	156	11.19	2200	302	2	3.28	
	128	13.65	2200	369	2	3.28	
	118	14.8	2200	400	2	3.28	
	104	16.8	2200	454	2	3.28	
	97	17.96	2200	485	2	3.28	
	86	20.38	2200	550	2	3.28	
	80	21.98	2200	594	2	3.28	
	74	23.8	2200	643	2	3.28	
	68	25.88	2200	699	2	3.28	
	63	27.94	2200	755	2	3.28	
	58	30.29	2200	818	2	3.28	
	53	32.95	2200	890	2	3.28	
	49	36	2200	972	2	3.28	
	44	39.52	2200	1067	2	3.28	
	40	43.62	2200	1178	2	3.28	
	36	49.21	2200	1329	2	3.28	
	32	54.12	2200	1462	2	3.28	
	29	59.92	2200	1618	2	3.28	
	25	70.27	2200	1898	2	3.28	
	23	77.54	2200	2094	2	3.2	
	20	86.26	2200	2330	2	2.8	

(B) - See footnotes page on inside back cover

MSM integral gearmotors

1750 RPM – 60 Hz

Input power (Hp)	Speed (RPM)	Ratio	OHL (LBF) (B)	Output torque (in-lb)	Gear stage	Service factor (SF)	Catalog number
0.75 (cont.)	46	38.17	2200	1031	3	3.28	MW583GH80G4
	37	47.88	2200	1293	3	3.28	
	33	53.2	2200	1437	3	3.28	
	29	61.18	2200	1653	3	3.28	
	27	65.8	2200	1777	3	3.28	
	23	76.67	2200	2071	3	3.28	
	21	83.13	2200	2245	3	3.05	
	19	90.44	2200	2443	3	2.8	
	18	98.8	2200	2669	3	2.57	
	16	108.45	2200	2929	3	2.33	
	15	119.7	2200	3233	3	2.12	
	13	135.05	2200	3648	3	1.88	
	12	148.52	2200	4012	3	1.71	
	11	164.44	2200	4442	3	1.55	
	9	192.85	2200	5209	3	1.32	
	8	212.8	2200	5748	3	1.19	
	7	236.74	2200	6395	3	1.07	
	182	9.63	2500	260	2	3.28	MW682GH80F4
	155	11.29	2500	305	2	3.28	
	130	13.45	2500	363	2	3.28	
	120	14.59	2500	394	2	3.28	
	107	16.28	2500	440	2	3.28	
	99	17.64	2500	476	2	3.28	
	88	19.99	2500	540	2	3.28	
	81	21.54	2500	582	2	3.28	
	75	23.29	2500	629	2	3.28	
	65	26.75	2500	723	2	3.28	
	60	29.37	2500	793	2	3.28	
	54	32.34	2500	874	2	3.28	
	50	35.10	2500	948	2	3.28	
	46	38.25	2500	1033	2	3.28	
	42	41.89	2500	1131	2	3.28	
	38	46.14	2500	1246	2	3.28	
	33	53.07	2500	1433	2	3.28	
	30	57.49	2500	1553	2	3.28	
	28	63.54	2500	1716	2	3.28	
	24	74.13	2500	2002	2	3.28	
	21	82.52	2500	2229	2	3.21	
	47	37.41	2500	1010	3	3.28	MW683GH80F4
	39	44.94	2500	1214	3	3.28	
	33	52.91	2500	1429	3	3.28	
	30	59.29	2500	1601	3	3.28	
	26	66.45	2500	1795	3	3.28	
	24	72.54	2500	1959	3	3.28	
	22	79.63	2500	2151	3	3.28	
	20	87.68	2500	2368	3	3.28	
	18	95.16	2500	2570	3	3.28	
	17	103.72	2500	2802	3	3.16	
	15	113.59	2500	3068	3	2.88	
	14	125.11	2500	3379	3	2.61	
	12	143.88	2500	3886	3	2.28	
	11	155.87	2500	4210	3	2.11	
	10	172.28	2500	4653	3	1.91	
	9	200.99	2500	5429	3	1.63	
	8	223.74	2500	6043	3	1.46	
	6.82	256.48	2500	6928	4	1.28	MW684GH80F4
	6.39	273.93	2500	7399	4	1.20	
	6.24	280.25	2500	7570	4	1.17	
	5.93	294.95	2500	7967	4	1.11	
	5.43	322.29	2500	8705	4	1.02	
	4.87	359.70	2500	8851	4	0.91	
	4.71	371.83	2500	8851	4	0.88	
	4.23	414.11	2500	8851	4	0.79	
	4.05	431.64	2500	8851	4	0.76	
	3.89	450.22	2500	8851	4	0.73	
	3.67	476.24	2500	8851	4	0.69	

(B) - See footnotes page on inside back cover

MSM integral gearmotors

1750 RPM – 60 Hz

Input power (Hp)	Speed (RPM)	Ratio	OHL (LBF) (B)	Output torque (in-lb)	Gear stage	Service factor (SF)	Catalog number
0.75 (cont.)	30	57.59	3611	1556	3	3.28	MW883GH80F4
	26	67.50	3611	1823	3	3.28	
	22	80.45	3611	2173	3	3.28	
	20	87.25	3611	2357	3	3.28	
	18	97.39	3611	2631	3	3.28	
	17	105.48	3611	2849	3	3.28	
	15	119.55	3611	3229	3	3.28	
	14	128.79	3611	3479	3	3.28	
	13	139.26	3611	3762	3	3.28	
	12	151.22	3611	4085	3	3.28	
	10	167.20	3611	4516	3	3.28	
	10	181.13	3611	4892	3	3.28	MW883GH80F4
	9	204.11	3611	5513	3	3.05	
	8	223.47	3611	6036	3	2.79	
	7	248.92	3611	6724	3	2.51	
	6	284.63	3611	7688	3	2.19	
	6	315.64	3611	8526	3	1.97	
	5	350.03	3611	9455	3	1.77	
	5.12	341.76	3611	9231	4	1.82	MW884GH80F4
	4.80	364.44	3611	9844	4	1.71	
	4.26	410.82	3611	11096	4	1.52	
	4.11	425.60	3611	11496	4	1.46	
	3.59	487.32	3611	13163	4	1.28	
	3.25	538.94	3611	14557	4	1.16	
	3.07	569.73	3611	15389	4	1.09	
	2.84	617.06	3611	16667	4	1.01	
	2.65	659.24	3611	16817	4	0.94	
	2.47	707.44	3611	16817	4	0.88	
	2.27	772.46	3611	16817	4	0.81	
	2.15	814.67	3611	16817	4	0.76	
	1.97	886.16	3611	16817	4	0.70	
	1.90	920.14	3611	16817	4	0.68	
	21	82.39	5433	2225	3	3.28	MW1083GH80F4
	19	94.52	5433	2553	3	3.28	
	16	111.56	5433	3013	3	3.28	
	14	120.93	5433	3266	3	3.28	
	13	134.45	5433	3632	3	3.28	
	12	146.04	5433	3945	3	3.28	
	11	161.54	5433	4363	3	3.28	
	10	173.42	5433	4684	3	3.28	
	9	186.89	5433	5048	3	3.28	
	9	202.29	5433	5464	3	3.28	
	8	220.05	5433	5944	3	3.28	
	7	240.77	5433	6503	3	3.28	
	6.86	255.20	5433	6893	4	4.37	MW1084GH80F4
	6.28	278.83	5433	7532	4	4.00	
	5.81	301.21	5433	8136	4	3.70	
	5.49	318.85	5433	8612	4	3.49	
	5.32	329.10	5433	8889	4	3.39	
	4.97	351.96	5433	9507	4	3.17	
	4.41	397.15	5433	10727	4	2.81	
	3.89	450.40	5433	12166	4	2.47	
	3.70	473.17	5433	12781	4	2.35	
	3.40	515.41	5433	13922	4	2.16	
	3.20	546.18	5433	14753	4	2.04	
	2.93	596.76	5433	16119	4	1.87	
	2.70	649.15	5433	17534	4	1.72	
	2.63	665.33	5433	17971	4	1.67	
	2.48	706.17	5433	19074	4	1.58	
	2.34	746.31	5433	20158	4	1.49	
	2.24	780.09	5433	21071	4	1.43	
	2.13	820.62	5433	22166	4	1.36	
	1.99	880.97	5433	23796	4	1.26	
	1.84	949.40	5433	25644	4	1.17	
	1.73	1013.64	5433	27379	4	1.10	
	1.59	1099.25	5433	29692	4	1.01	
	1.48	1183.01	5433	30093	4	0.94	
	1.39	1260.63	5433	30093	4	0.88	
	1.33	1319.78	5433	30093	4	0.84	

(B) - See footnotes page on inside back cover

MSM integral gearmotors

1750 RPM – 60 Hz

Input power (Hp)	Speed (RPM)	Ratio	OHL (LBF) (B)	Output torque (in-lb)	Gear stage	Service factor (SF)	Catalog number
0.75 (cont.)	1.24	1416.03	5433	30093	4	0.79	MW1084GH80F4
	1.19	1468.40	5433	30093	4	0.76	
	1.06	1652.71	5433	30093	4	0.67	
	7.02	249.31	6777	6734	4	8.02	MW1284GH80F4
	6.46	271.06	6777	7321	4	7.37	
	6.09	287.49	6777	7765	4	6.95	
	5.53	316.26	6777	8542	4	6.32	
	4.79	365.62	6777	9876	4	5.47	
	4.37	400.51	6777	10818	4	4.99	
	4.32	405.24	6777	10946	4	4.93	
	3.75	466.72	6777	12606	4	4.28	
	3.67	476.63	6777	12874	4	4.19	
	3.44	509.27	6777	13756	4	3.93	
	3.32	527.55	6777	14250	4	3.79	
	3.07	570.63	6777	15413	4	3.50	
	2.89	605.91	6777	16366	4	3.30	
	2.64	662.74	6777	17901	4	3.02	
	2.53	690.67	6777	18655	4	2.89	
	2.28	766.10	6777	20693	4	2.61	
	2.23	783.00	6777	21149	4	2.55	
	2.02	868.40	6777	23456	4	2.30	
	1.94	902.73	6777	24383	4	2.21	
	1.71	1020.55	6777	27566	4	1.96	
	1.49	1175.59	6777	31754	4	1.70	
	1.48	1185.58	6777	32023	4	1.69	
	1.37	1274.88	6777	34436	4	1.57	
	1.31	1335.16	6777	36064	4	1.50	
	1.20	1462.59	6777	39506	4	1.37	
	1.15	1520.48	6777	41069	4	1.31	
	1.01	1724.52	6777	46580	4	1.16	
	1.00	1751.48	6777	47309	4	1.14	
	0.87	2001.69	6777	53991	4	1.00	
	0.79	2220.12	6777	53991	4	0.90	
	0.76	2289.91	6777	53991	4	0.87	
	0.71	2462.39	6777	53991	4	0.81	
	0.70	2494.22	6777	53991	5	0.80	MW1285GH80F4
	0.60	2915.15	6777	53991	5	0.69	
	7.10	246.52	11478	6659	4	11.56	MW1484GH80F4
	6.72	260.27	11478	7030	4	10.95	
	6.14	285.02	11478	7699	4	10.00	
	5.87	298.38	11478	8059	4	9.55	
	5.30	330.30	11478	8922	4	8.63	
	5.17	338.27	11478	9137	4	8.43	
	4.79	365.49	11478	9872	4	7.80	
	4.57	383.10	11478	10348	4	7.44	
	4.09	427.73	11478	11553	4	6.67	
	4.01	436.57	11478	11792	4	6.53	
	3.62	483.09	11478	13049	4	5.90	
	3.56	490.94	11478	13261	4	5.81	
	3.38	517.02	11478	13965	4	5.51	
	3.12	560.48	11478	15139	4	5.09	
	2.96	592.18	11478	15995	4	4.81	
	2.75	635.41	11478	17163	4	4.49	
	2.50	699.28	11478	18888	4	4.08	
	2.38	733.96	11478	19825	4	3.88	
	2.18	803.25	11478	21696	4	3.55	
	2.09	839.04	11478	22663	4	3.40	
	1.89	924.27	11478	24965	4	3.08	
	1.84	950.06	11478	25662	4	3.00	
	1.72	1020.01	11478	27551	4	2.79	
	1.61	1086.42	11478	29345	4	2.62	
	1.46	1199.92	11478	32411	4	2.38	
	1.41	1237.20	11478	33418	4	2.30	
	1.39	1258.33	11478	33988	4	2.27	

(B) - See footnotes page on inside back cover

MSM integral gearmotors

1750 RPM – 60 Hz

Input power (Hp)	Speed (RPM)	Ratio	OHL (LBF) (B)	Output torque (in-lb)	Gear stage	Service factor (SF)	Catalog number
0.75 (cont.)	1.25	1401.32	11478	37851	4	2.03	MW1484GH80F4
	1.23	1426.47	11478	38530	4	2.00	
	1.10	1588.57	11478	42908	4	1.79	
	0.96	1815.51	11478	49038	4	1.57	
	0.94	1858.26	11478	50193	4	1.53	
	0.86	2043.12	11478	55186	4	1.40	
	0.81	2154.50	11478	58195	4	1.32	
	0.77	2266.07	11478	61208	4	1.26	
	0.73	2389.60	11478	64545	4	1.19	
	0.70	2513.36	11478	67888	4	1.13	
	0.68	2568.78	11478	69384	5	1.11	MW1485GH80F4
	0.64	2751.57	11478	74322	5	1.04	
	0.62	2828.98	11478	76413	5	1.01	
	0.58	3039.37	11478	77004	5	0.94	
	0.53	3328.54	11478	77004	5	0.86	
	0.49	3536.54	11478	77004	5	0.81	
	0.46	3838.36	11478	77004	5	0.74	
	0.44	3938.84	11478	77004	5	0.72	
	0.43	4037.27	11478	77004	5	0.71	
	0.41	4246.36	11478	77004	5	0.67	
	5.61	312.03	20233	8428	4	14.07	MW1684GH80F4
	4.63	377.67	20233	10201	4	11.63	
	4.27	410.14	20233	11078	4	10.71	
	4.03	434.25	20233	11729	4	10.11	
	3.68	475.27	20233	12837	4	9.24	
	3.53	496.41	20233	13408	4	8.85	
	3.11	562.78	20233	15201	4	7.80	
	2.68	652.15	20233	17615	4	6.73	
	2.38	734.68	20233	19844	4	5.98	
	2.13	820.27	20233	22156	4	5.35	
	1.90	920.38	20233	24860	4	4.77	
	1.63	1075.86	20233	29060	4	4.08	
	1.44	1218.18	20233	32904	4	3.60	
	1.24	1407.54	20233	38019	4	3.12	
	1.09	1607.88	20233	43430	4	2.73	
	0.99	1761.33	20233	47575	4	2.49	
	0.84	2077.99	20233	56128	4	2.11	
	0.73	2396.62	20233	64734	4	1.83	
	0.74	2365.25	20233	63887	5	1.86	MW1685GH80F4
	0.65	2681.15	20233	72420	5	1.64	
	0.57	3071.05	20233	82951	5	1.43	
	0.52	3391.25	20233	91600	5	1.29	
	0.45	3929.85	20233	106148	5	1.12	
	0.38	4577.86	20233	118603	5	0.96	
	0.34	5173.66	20233	118603	5	0.85	
	0.29	6051.15	20233	118603	5	0.73	
1	179	9.80	678	353	2	2.46	MW382GH80G4
	154	11.39	704	410	2	2.46	
	138	12.64	704	455	2	2.46	
	127	13.76	704	496	2	2.46	
	114	15.39	704	554	2	2.46	
	104	16.83	704	606	2	2.46	
	95	18.47	706	665	2	2.46	
	86	20.37	706	734	2	2.46	
	78	22.58	706	813	2	2.46	
	68	25.58	706	921	2	2.46	
	62	28.22	906	1016	2	2.37	
	55	31.91	906	1149	2	2.21	
	48	36.43	906	1312	2	2.03	
	46	38.19	906	1375	2	1.93	
	40	43.43	962	1564	2	1.70	
	35	49.56	962	1785	2	1.49	
	31	55.84	962	2011	2	1.32	
	28	62.40	962	2247	2	1.18	
	25	71.18	962	2563	2	1.04	

(B) - See footnotes page on inside back cover

MSM integral gearmotors

1750 RPM – 60 Hz

Input power (Hp)	Speed (RPM)	Ratio	OHL (LBF) (B)	Output torque (in-lb)	Gear stage	Service factor (SF)	Catalog number
1 (cont.)	44	40.04	906	1442	3	2.03	MW383GH80G4
	40	44.05	962	1586	3	1.84	
	34	51.16	962	1842	3	1.59	
	32	55.40	962	1995	3	1.46	MW383GH80G4
	28	62.66	962	2257	3	1.29	
	25	68.86	962	2480	3	1.18	
	23	75.95	962	2735	3	1.07	
	220	7.95	1025	286	2	2.46	MW482GH80G4
	183	9.55	1025	344	2	2.46	
	156	11.24	1098	405	2	2.46	
	139	12.59	1098	453	2	2.46	
	124	14.11	1098	508	2	2.46	
	114	15.41	1098	555	2	2.46	
	105	16.63	1098	599	2	2.46	MW482GH80G4
	90	19.34	1135	697	2	2.46	
	82	21.46	1135	773	2	2.46	
	75	23.37	1135	842	2	2.46	
	67	26.14	1135	941	2	2.46	
	61	28.58	1134	1029	2	2.46	
	56	31.36	1134	1129	2	2.46	
	51	34.58	1334	1245	2	2.46	
	46	38.33	1334	1380	2	2.46	
	40	43.43	1334	1564	2	2.46	
	37	47.92	1334	1726	2	2.37	
	32	54.17	1334	1951	2	2.18	
	28	61.86	1334	2228	2	1.91	
	25	70.33	1334	2533	2	1.68	
	23	75.27	1334	2711	2	1.57	
	20	86.77	1334	3125	2	1.36	
	43	40.99	1334	1476	3	2.46	MW483GH80G4
	37	47.66	1334	1716	3	2.46	
	33	52.88	1334	1904	3	2.39	
	30	57.59	1334	2074	3	2.26	
	27	64.41	1334	2320	3	2.06	
	25	70.42	1334	2536	3	1.88	
	23	77.29	1334	2784	3	1.72	
	21	85.22	1334	3069	3	1.56	
	19	94.46	1334	3402	3	1.40	
	16	107.02	1334	3854	3	1.24	
	15	118.08	1334	4253	3	1.12	
	177	9.87	2200	355	2	2.46	MW582GH80G4
	156	11.19	2200	403	2	2.46	
	128	13.65	2200	492	2	2.46	
	118	14.8	2200	533	2	2.46	
	104	16.8	2200	605	2	2.46	
	97	17.96	2200	647	2	2.46	
	86	20.38	2200	734	2	2.46	
	80	21.98	2200	792	2	2.46	
	74	23.8	2200	857	2	2.46	
	68	25.88	2200	932	2	2.46	
	63	27.94	2200	1006	2	2.46	
	58	30.29	2200	1091	2	2.46	
	53	32.95	2200	1187	2	2.46	
	49	36	2200	1297	2	2.46	
	44	39.52	2200	1423	2	2.46	
	40	43.62	2200	1571	2	2.46	
	36	49.21	2200	1772	2	2.46	
	32	54.12	2200	1949	2	2.46	
	29	59.92	2200	2158	2	2.46	
	25	70.27	2200	2531	2	2.46	
	23	77.54	2200	2793	2	2.4	
	20	86.26	2200	3107	2	2.1	
	46	38.17	2200	1375	3	2.46	MW583GH80G4
	37	47.88	2200	1724	3	2.46	
	33	53.2	2200	1916	3	2.46	

(B) - See footnotes page on inside back cover

MSM integral gearmotors

1750 RPM – 60 Hz

Input power (Hp)	Speed (RPM)	Ratio	OHL (LBF) (B)	Output torque (in-lb)	Gear stage	Service factor (SF)	Catalog number
	29	61.18	2200	2203	3	2.46	
	27	65.8	2200	2370	3	2.46	
	23	76.67	2200	2761	3	2.46	
	21	83.13	2200	2994	3	2.29	
	19	90.44	2200	3257	3	2.1	
	18	98.8	2200	3558	3	1.93	**MW583GH80G4**
	16	108.45	2200	3906	3	1.75	
	15	119.7	2200	4311	3	1.59	
	13	135.05	2200	4864	3	1.41	
	12	148.52	2200	5349	3	1.28	
	11	164.44	2200	5922	3	1.16	
	182	9.63	2500	347	2	2.46	
	155	11.29	2500	407	2	2.45	
	130	13.45	2500	484	2	2.46	
	120	14.59	2500	525	2	2.46	
	107	16.28	2500	586	2	2.46	
	99	17.64	2500	635	2	2.46	
	88	19.99	2500	720	2	2.46	
	81	21.54	2500	776	2	2.46	
	75	23.29	2500	839	2	2.46	
	65	26.75	2500	963	2	2.46	
	60	29.37	2500	1058	2	2.46	**MW682GH80G4**
	54	32.34	2500	1165	2	2.46	
	50	35.10	2500	1264	2	2.46	
	46	38.25	2500	1378	2	2.46	
	42	41.89	2500	1509	2	2.46	
	38	46.14	2500	1662	2	2.46	
	33	53.07	2500	1911	2	2.46	
	30	57.49	2500	2070	2	2.46	
	28	63.54	2500	2288	2	2.46	
1	24	74.13	2500	2670	2	2.46	
(cont.)	21	82.52	2500	2972	2	2.41	
	47	37.41	2500	1347	3	2.46	
	39	44.94	2500	1618	3	2.46	
	33	52.91	2500	1906	3	2.46	
	30	59.29	2500	2135	3	2.46	
	26	66.45	2500	2393	3	2.46	
	24	72.54	2500	2612	3	2.46	
	22	79.63	2500	2868	3	2.46	
	20	87.68	2500	3158	3	2.46	
	18	95.16	2500	3427	3	2.46	**MW683GH80G4**
	17	103.72	2500	3735	3	2.37	
	15	113.59	2500	4091	3	2.16	
	14	125.11	2500	4506	3	1.96	
	12	143.88	2500	5182	3	1.71	
	11	155.87	2500	5614	3	1.58	
	10	172.28	2500	6205	3	1.43	
	9	200.99	2500	7239	3	1.22	
	8	223.74	2500	8058	3	1.10	
	6.82	256.48	2500	8851	4	0.96	
	6.39	273.93	2500	8851	4	0.90	
	6.24	280.25	2500	8851	4	0.88	**MW684GH80G4**
	5.93	294.95	2500	8851	4	0.83	
	5.43	322.29	2500	8851	4	0.76	
	30	57.59	3611	2074	3	2.46	
	26	67.50	3611	2431	3	2.46	
	22	80.45	3611	2897	3	2.46	
	20	87.25	3611	3142	3	2.46	
	18	97.39	3611	3507	3	2.46	**MW883GH80G4**
	17	105.48	3611	3799	3	2.46	
	15	119.55	3611	4306	3	2.46	
	14	128.79	3611	4638	3	2.46	
	13	139.26	3611	5015	3	2.46	

(B) - See footnotes page on inside back cover

MSM integral gearmotors

1750 RPM – 60 Hz

Input power (Hp)	Speed (RPM)	Ratio	OHL (LBF) (B)	Output torque (in-lb)	Gear stage	Service factor (SF)	Catalog number
	12	151.22	3611	5446	3	2.46	
	10	167.20	3611	6022	3	2.46	
	10	181.13	3611	6523	3	2.46	
	9	204.11	3611	7351	3	2.29	
	8	223.47	3611	8048	3	2.09	**MW883GH80G4**
	7	248.92	3611	8965	3	1.88	
	6	284.63	3611	10251	3	1.64	
	6	315.64	3611	11368	3	1.48	
	5	350.03	3611	12606	3	1.33	
	5.12	341.76	3611	12308	4	1.37	
	4.80	364.44	3611	13125	4	1.28	
	4.26	410.82	3611	14795	4	1.14	
	4.11	425.60	3611	15328	4	1.10	
	3.59	487.32	3611	16817	4	0.96	**MW884GH80G4**
	3.25	538.94	3611	16817	4	0.87	
	3.07	569.73	3611	16817	4	0.82	
	2.84	617.06	3611	16817	4	0.76	
	0.27	6566.41	3611	16817	5	0.07	
	0.25	7099.64	3611	16817	5	0.07	**MW885GH80G4**
	0.23	7551.23	3611	16817	5	0.06	
	21	82.39	5433	2967	3	2.46	
	19	94.52	5433	3404	3	2.46	
	16	111.56	5433	4018	3	2.46	
	14	120.93	5433	4355	3	2.46	
	13	134.45	5433	4842	3	2.46	
	12	146.04	5433	5260	3	2.46	**MW1083GH80G4**
	11	161.54	5433	5818	3	2.46	
	10	173.42	5433	6246	3	2.46	
	9	186.89	5433	6731	3	2.46	
	9	202.29	5433	7285	3	2.46	
	8	220.05	5433	7925	3	2.46	
	7	240.77	5433	8671	3	2.46	
1 (cont.)	6.86	255.20	5433	9191	4	3.27	
	6.28	278.83	5433	10042	4	3.00	
	5.81	301.21	5433	10848	4	2.77	
	5.49	318.85	5433	11483	4	2.62	
	5.32	329.10	5433	11852	4	2.54	
	4.97	351.96	5433	12675	4	2.37	
	4.41	397.15	5433	14303	4	2.10	
	3.89	450.40	5433	16221	4	1.86	
	3.70	473.17	5433	17041	4	1.77	
	3.40	515.41	5433	18562	4	1.62	
	3.20	546.18	5433	19670	4	1.53	
	2.93	596.76	5433	21492	4	1.40	**MW1084GH80G4**
	2.70	649.15	5433	23379	4	1.29	
	2.63	665.33	5433	23961	4	1.26	
	2.48	706.17	5433	25432	4	1.18	
	2.34	746.31	5433	26878	4	1.12	
	2.24	780.09	5433	28095	4	1.07	
	2.13	820.62	5433	29554	4	1.02	
	1.99	880.97	5433	30093	4	0.95	
	1.84	949.40	5433	30093	4	0.88	
	1.73	1013.64	5433	30093	4	0.82	
	1.59	1099.25	5433	30093	4	0.76	
	7.02	249.31	6777	8979	4	6.01	
	6.46	271.06	6777	9762	4	5.53	
	6.09	287.49	6777	10354	4	5.21	
	5.53	316.26	6777	11390	4	4.74	
	4.79	365.62	6777	13168	4	4.10	
	4.37	400.51	6777	14424	4	3.74	**MW1284GH80G4**
	4.32	405.24	6777	14594	4	3.70	
	3.75	466.72	6777	16808	4	3.21	
	3.67	476.63	6777	17166	4	3.15	
	3.44	509.27	6777	18341	4	2.94	
	3.32	527.55	6777	18999	4	2.84	
	3.07	570.63	6777	20551	4	2.63	

(B) - See footnotes page on inside back cover

MSM integral gearmotors

1750 RPM – 60 Hz

Input power (Hp)	Speed (RPM)	Ratio	OHL (LBF) (B)	Output torque (in-lb)	Gear stage	Service factor (SF)	Catalog number
1 (cont.)	2.89	605.91	6777	21821	4	2.47	MW1284GH80G4
	2.64	662.74	6777	23868	4	2.26	
	2.53	690.67	6777	24874	4	2.17	
	2.28	766.10	6777	27591	4	1.96	
	2.23	783.00	6777	28199	4	1.91	
	2.02	868.40	6777	31275	4	1.73	
	1.94	902.73	6777	32511	4	1.66	
	1.71	1020.55	6777	36754	4	1.47	
	1.49	1175.59	6777	42338	4	1.28	
	1.48	1185.58	6777	42698	4	1.26	
	1.37	1274.88	6777	45914	4	1.18	
	1.31	1335.16	6777	48085	4	1.12	
	1.20	1462.59	6777	52674	4	1.03	
	1.15	1520.48	6777	53991	4	0.99	
	1.01	1724.52	6777	53991	4	0.87	
	1.00	1751.48	6777	53991	4	0.86	
	0.87	2001.69	6777	53991	4	0.75	
	7.10	246.52	11478	8878	4	8.67	MW1484GH80G4
	6.72	260.27	11478	9373	4	8.22	
	6.14	285.02	11478	10265	4	7.50	
	5.87	298.38	11478	10746	4	7.17	
	5.30	330.30	11478	11896	4	6.47	
	5.17	338.27	11478	12182	4	6.32	
	4.79	365.49	11478	13163	4	5.85	
	4.57	383.10	11478	13797	4	5.58	
	4.09	427.73	11478	15404	4	5.00	
	4.01	436.57	11478	15723	4	4.90	
	3.62	483.09	11478	17398	4	4.43	
	3.56	490.94	11478	17681	4	4.36	
	3.38	517.02	11478	18620	4	4.14	
	3.12	560.48	11478	20185	4	3.81	
	2.96	592.18	11478	21327	4	3.61	
	2.75	635.41	11478	22884	4	3.37	
	2.50	699.28	11478	25184	4	3.06	
	2.38	733.96	11478	26433	4	2.91	
	2.18	803.25	11478	28928	4	2.66	
	2.09	839.04	11478	30218	4	2.55	
	1.89	924.27	11478	33287	4	2.31	
	1.84	950.06	11478	34216	4	2.25	
	1.72	1020.01	11478	36735	4	2.10	
	1.61	1086.42	11478	39127	4	1.97	
	1.46	1199.92	11478	43214	4	1.78	
	1.41	1237.20	11478	44557	4	1.73	
	1.39	1258.33	11478	45318	4	1.70	
	1.25	1401.32	11478	50468	4	1.53	
	1.23	1426.47	11478	51373	4	1.50	
	1.10	1588.57	11478	57211	4	1.35	
	0.96	1815.51	11478	65384	4	1.18	
	0.94	1858.26	11478	66924	4	1.15	
	0.86	2043.12	11478	73581	4	1.05	MW1484GH80G4
	0.81	2154.50	11478	77004	4	0.99	
	0.77	2266.07	11478	77004	4	0.94	
	0.73	2389.60	11478	77004	4	0.89	
	0.70	2513.36	11478	77004	4	0.85	
	0.68	2568.78	11478	77004	5	0.83	MW1485GH80G4
	0.64	2751.57	11478	77004	5	0.78	
	0.62	2828.98	11478	77004	5	0.76	
	5.61	312.03	20233	11237	4	10.55	MW1684GH80G4
	4.63	377.67	20233	13601	4	8.72	
	4.27	410.14	20233	14771	4	8.03	
	4.03	434.25	20233	15639	4	7.58	
	3.68	475.27	20233	17117	4	6.93	
	3.53	496.41	20233	17878	4	6.63	
	3.11	562.78	20233	20268	4	5.85	
	2.68	652.15	20233	23487	4	5.05	
	2.38	734.68	20233	26459	4	4.48	
	2.13	820.27	20233	29542	4	4.01	

(B) - See footnotes page on inside back cover

MSM integral gearmotors

1750 RPM – 60 Hz

Input power (Hp)	Speed (RPM)	Ratio	OHL (LBF) (B)	Output torque (in-lb)	Gear stage	Service factor (SF)	Catalog number
1 (cont.)	1.90	920.38	20233	33147	4	3.58	MW1684GH80G4
	1.63	1075.86	20233	38746	4	3.06	
	1.44	1218.18	20233	43872	4	2.70	
	1.24	1407.54	20233	50692	4	2.34	
	1.09	1607.88	20233	57907	4	2.05	
	0.99	1761.33	20233	63433	4	1.87	
	0.84	2077.99	20233	74837	4	1.58	
	0.73	2396.62	20233	86313	4	1.37	
	0.74	2365.25	20233	85183	5	1.39	MW1685GH80G4
	0.65	2681.15	20233	96560	5	1.23	
	0.57	3071.05	20233	110602	5	1.07	
	0.52	3391.25	20233	118603	5	0.97	
	0.45	3929.85	20233	118603	5	0.84	
1.5	179	9.80	678	529	2	3.34	MW382GH90H4
	154	11.39	704	615	2	3.34	
	138	12.64	704	683	2	3.33	
	127	13.76	704	743	2	3.33	
	114	15.39	704	831	2	3.17	
	104	16.83	704	909	2	3.04	
	95	18.47	706	998	2	2.91	
	86	20.37	706	1100	2	2.66	
	78	22.58	706	1220	2	2.39	
	68	25.58	706	1382	2	2.11	
	62	28.22	906	1524	2	1.92	
	55	31.91	906	1724	2	1.69	
	48	36.43	906	1968	2	1.48	
	46	38.19	906	2063	2	1.29	
	40	43.43	962	2346	2	1.13	
	44	40.04	906	2163	3	1.35	MW383GH90H4
	40	44.05	962	2380	3	1.23	
	34	51.16	962	2764	3	1.06	
	220	7.95	1025	429	2	3.34	MW482GH90H4
	183	9.55	1025	516	2	3.33	
	156	11.24	1098	607	2	3.34	
	139	12.59	1098	680	2	3.34	
	124	14.11	1098	762	2	3.34	
	114	15.41	1098	832	2	3.34	
	105	16.63	1098	898	2	3.34	
	90	19.34	1135	1045	2	3.33	
	82	21.46	1135	1159	2	3.34	
	75	23.37	1135	1262	2	3.33	
	67	26.14	1135	1412	2	3.01	
	61	28.58	1334	1544	2	2.75	
	56	31.36	1334	1694	2	2.51	
	51	34.58	1334	1868	2	2.27	
	46	38.33	1334	2071	2	2.05	
	40	43.43	1334	2346	2	1.81	
	37	47.92	1334	2589	2	1.64	
	32	54.17	1334	2926	2	1.45	
	28	61.86	1334	3342	2	1.27	
	25	70.33	1334	3799	2	1.12	
	23	75.27	1334	4066	2	1.04	
	43	40.99	1334	2214	3	1.89	MW483GH90H4
	37	47.66	1334	2575	3	1.71	
	33	52.88	1334	2857	3	1.59	
	30	57.59	1334	3111	3	1.51	
	27	64.41	1334	3480	3	1.37	
	25	70.42	1334	3804	3	1.26	
	23	77.29	1334	4175	3	1.14	
	21	85.22	1334	4604	3	1.04	
	177	9.87	2200	533	2	3.34	MW582GH90H4
	156	11.19	2200	604	2	3.34	
	128	13.65	2200	737	2	3.34	
	118	14.8	2200	800	2	3.34	
	104	16.8	2200	908	2	3.34	

(B) - See footnotes page on inside back cover

MSM integral gearmotors

1750 RPM – 60 Hz

Input power (Hp)	Speed (RPM)	Ratio	OHL (LBF) (B)	Output torque (in-lb)	Gear stage	Service factor (SF)	Catalog number
1.5 (cont.)	97	17.96	2200	970	2	3.34	MW582GH90H4
	86	20.38	2200	1101	2	3.34	
	80	21.98	2200	1187	2	3.34	
	74	23.8	2200	1286	2	3.34	
	68	25.88	2200	1398	2	3.34	
	63	27.94	2200	1509	2	3.34	
	58	30.29	2200	1636	2	3.34	
	53	32.95	2200	1780	2	3.34	
	49	36	2200	1945	2	3.33	
	44	39.52	2200	2135	2	3.07	
	40	43.62	2200	2356	2	2.8	
	36	49.21	2200	2658	2	2.47	
	32	54.12	2200	2924	2	2.27	
	29	59.92	2200	3237	2	2.07	
	25	70.27	2200	3796	2	1.73	
	23	77.54	2200	4189	2	1.6	
	20	86.26	2200	4660	2	1.4	
	46	38.17	2200	2062	3	3.33	MW583GH90H4
	37	47.88	2200	2587	3	2.65	
	33	53.2	2200	2874	3	2.39	
	29	61.18	2200	3305	3	2.07	
	27	65.8	2200	3555	3	1.93	
	23	76.67	2200	4142	3	1.65	
	21	83.13	2200	4491	3	1.53	
	19	90.44	2200	4886	3	1.4	
	18	98.8	2200	5337	3	1.29	
	16	108.45	2200	5859	3	1.17	
	15	119.7	2200	6466	3	1.06	
	182	9.63	2500	520	2	3.34	MW682GH90H4
	155	11.29	2500	610	2	3.33	
	130	13.45	2500	727	2	3.33	
	120	14.59	2500	788	2	3.34	
	107	16.28	2500	879	2	3.34	
	99	17.64	2500	953	2	3.33	
	88	19.99	2500	1080	2	3.29	
	81	21.54	2500	1164	2	3.17	
	75	23.29	2500	1258	2	3.04	
	65	26.75	2500	1445	2	3.34	
	60	29.37	2500	1587	2	3.33	
	54	32.34	2500	1747	2	3.34	
	50	35.10	2500	1896	2	3.34	
	46	38.25	2500	2066	2	3.30	
	42	41.89	2500	2263	2	3.16	
	38	46.14	2500	2493	2	3.02	
	33	53.07	2500	2867	2	2.62	
	30	57.49	2500	3106	2	2.42	
	28	63.54	2500	3433	2	2.19	
	24	74.13	2500	4005	2	1.88	
	21	82.52	2500	4458	2	1.69	
	47	37.41	2500	2021	3	3.34	MW683GH90H4
	39	44.94	2500	2428	3	3.34	
	33	52.91	2500	2858	3	3.10	
	30	59.29	2500	3203	3	2.76	
	26	66.45	2500	3590	3	2.47	
	24	72.54	2500	3919	3	2.26	
	22	79.63	2500	4302	3	2.06	
	20	87.68	2500	4737	3	1.87	
	18	95.16	2500	5141	3	1.72	
	17	103.72	2500	5603	3	1.58	
	15	113.59	2500	6136	3	1.44	
	14	125.11	2500	6759	3	1.31	
	12	143.88	2500	7773	3	1.14	
	11	155.87	2500	8420	3	1.05	
	118	14.86	3611	803	2	3.33	MW882GH90H4
	103	17.05	3611	921	2	3.34	

(B) - See footnotes page on inside back cover

MSM integral gearmotors

1750 RPM – 60 Hz

Input power (Hp)	Speed (RPM)	Ratio	OHL (LBF) (B)	Output torque (in-lb)	Gear stage	Service factor (SF)	Catalog number
1.5 (cont.)	87	20.12	3611	1087	2	3.34	MW882GH90H4
	80	21.81	3611	1178	2	3.34	
	72	24.25	3611	1310	2	3.34	
	66	26.34	3611	1423	2	3.34	
	60	29.14	3611	1574	2	3.34	
	57	30.67	3611	1657	2	3.34	
	51	34.23	3611	1849	2	3.34	
	47	37.08	3611	2003	2	3.34	
	42	42.03	3611	2271	2	3.33	
	39	45.27	3611	2446	2	3.34	
	36	48.95	3611	2644	2	3.34	
	33	53.16	3611	2872	2	3.34	
	30	58.78	3611	3175	2	3.33	
	27	63.67	3611	3440	2	3.13	
	24	71.75	3611	3876	2	2.86	
	22	78.56	3611	4244	2	2.65	
	20	87.50	3611	4727	2	2.42	
	17	100.06	3611	5405	2	2.15	
	16	110.96	3611	5994	2	1.96	
	14	123.05	3611	6647	2	1.79	
	30	57.59	3611	3111	3	3.34	MW883GH90H4
	26	67.50	3611	3646	3	3.34	
	22	80.45	3611	4346	3	3.34	
	20	87.25	3611	4713	3	3.34	
	18	97.39	3611	5261	3	3.2	
	17	105.48	3611	5698	3	2.95	
	15	119.55	3611	6458	3	2.60	
	14	128.79	3611	6957	3	2.42	
	13	139.26	3611	7523	3	2.24	
	12	151.22	3611	8169	3	2.06	
	10	167.20	3611	9032	3	1.86	
	10	181.13	3611	9785	3	1.72	
	9	204.11	3611	11026	3	1.53	
	8	223.47	3611	12072	3	1.39	
	7	248.92	3611	13447	3	1.25	
	6	284.63	3611	15376	3	1.09	
	5.12	341.76	3611	16817	4	0.91	MW884GH90H4
	4.80	364.44	3611	16817	4	0.85	
	4.26	410.82	3611	16817	4	0.76	
	4.11	425.60	3611	16817	4	0.73	
	70	24.89	5433	1345	2	3.33	MW1082GH90H4
	61	28.56	5433	1543	2	3.33	
	52	33.71	5433	1821	2	3.34	
	48	36.54	5433	1974	2	3.33	
	43	40.62	5433	2194	2	3.34	
	40	44.12	5433	2383	2	3.34	
	36	48.81	5433	2637	2	3.33	
	33	52.40	5433	2831	2	3.33	
	31	56.47	5433	3051	2	3.33	
	29	61.12	5433	3302	2	3.34	
	26	66.48	5433	3591	2	3.22	
	24	72.74	5433	3930	2	3.09	
	21	82.39	5433	4451	3	3.34	MW1083GH90H4
	19	94.52	5433	5106	3	3.34	
	16	111.56	5433	6027	3	3.34	
	14	120.93	5433	6533	3	3.34	
	13	134.45	5433	7263	3	3.34	
	12	146.04	5433	7889	3	3.34	
	11	161.54	5433	8727	3	3.34	
	10	173.42	5433	9368	3	3.21	
	9	186.89	5433	10096	3	2.98	
	9	202.29	5433	10928	3	2.75	
	8	220.05	5433	11887	3	2.53	
	7	240.77	5433	13007	3	2.31	

(B) - See footnotes page on inside back cover

MSM integral gearmotors

1750 RPM – 60 Hz

Input power (Hp)	Speed (RPM)	Ratio	OHL (LBF) (B)	Output torque (in-lb)	Gear stage	Service factor (SF)	Catalog number
1.5 (cont.)	6.86	255.20	5433	13786	4	2.18	MW1084GH90H4
	6.28	278.83	5433	15063	4	2.00	
	5.81	301.21	5433	16272	4	1.85	
	5.49	318.85	5433	17225	4	1.75	
	5.32	329.10	5433	17779	4	1.69	
	4.97	351.96	5433	19013	4	1.58	MW1084GH90H4
	4.41	397.15	5433	21455	4	1.40	
	3.89	450.40	5433	24332	4	1.24	
	3.70	473.17	5433	25561	4	1.18	
	3.40	515.41	5433	27843	4	1.08	
	3.20	546.18	5433	29506	4	1.02	
	2.93	596.76	5433	30093	4	0.93	
	2.70	649.15	5433	30093	4	0.86	
	2.63	665.33	5433	30093	4	0.84	
	2.48	706.17	5433	30093	4	0.79	
	2.34	746.31	5433	30093	4	0.75	
	2.24	780.09	5433	30093	4	0.71	
	2.13	820.62	5433	30093	4	0.68	
	19	90.32	6777	4879	3	3.34	MW1283GH90H4
	17	102.35	6777	5529	3	3.34	
	15	120.11	6777	6489	3	3.34	
	13	131.03	6777	7078	3	3.34	
	12	142.93	6777	7721	3	3.34	
	11	154.25	6777	8333	3	3.34	
	10	172.39	6777	9313	3	3.34	
	9	184.67	6777	9976	3	3.34	
	9	198.58	6777	10728	3	3.21	
	8	214.48	6777	11587	3	3.07	
	7.02	249.31	6777	13468	4	4.01	MW1284GH90H4
	6.46	271.06	6777	14643	4	3.69	
	6.09	287.49	6777	15531	4	3.48	
	5.53	316.26	6777	17085	4	3.16	
	4.79	365.62	6777	19751	4	2.73	
	4.37	400.51	6777	21636	4	2.50	
	4.32	405.24	6777	21892	4	2.47	
	3.75	466.72	6777	25213	4	2.14	
	3.67	476.63	6777	25748	4	2.10	
	3.44	509.27	6777	27511	4	1.96	
	3.32	527.55	6777	28499	4	1.89	
	3.07	570.63	6777	30826	4	1.75	
	2.89	605.91	6777	32732	4	1.65	
	2.64	662.74	6777	35802	4	1.51	
	2.53	690.67	6777	37311	4	1.45	
	2.28	766.10	6777	41386	4	1.30	
	2.23	783.00	6777	42299	4	1.28	
	2.02	868.40	6777	46912	4	1.15	
	1.94	902.73	6777	48767	4	1.11	
	1.71	1020.55	6777	53991	4	0.98	
	1.49	1175.59	6777	53991	4	0.85	
	1.48	1185.58	6777	53991	4	0.84	
	1.37	1274.88	6777	53991	4	0.78	
	1.31	1335.16	6777	53991	4	0.75	
	1.20	1462.59	6777	53991	4	0.68	

(B) - See footnotes page on inside back cover

MSM integral gearmotors

1750 RPM – 60 Hz

Input power (Hp)	Speed (RPM)	Ratio	OHL (LBF) (B)	Output torque (in-lb)	Gear stage	Service factor (SF)	Catalog number
	7.10	246.52	11478	13317	4	5.78	
	6.72	260.27	11478	14060	4	5.48	
	6.14	285.02	11478	15397	4	5.00	
	5.87	298.38	11478	16119	4	4.78	
	5.30	330.30	11478	17843	4	4.32	
	5.17	338.27	11478	18274	4	4.21	
	4.79	365.49	11478	19744	4	3.90	
	4.57	383.10	11478	20696	4	3.72	
	4.09	427.73	11478	23107	4	3.33	**MW1484GH90H4**
	4.01	436.57	11478	23584	4	3.27	
	3.62	483.09	11478	26097	4	2.95	
	3.56	490.94	11478	26521	4	2.90	
	3.38	517.02	11478	27930	4	2.76	
	3.12	560.48	11478	30278	4	2.54	
	2.96	592.18	11478	31990	4	2.41	
	2.75	635.41	11478	34326	4	2.24	
	2.50	699.28	11478	37776	4	2.04	
	2.38	733.96	11478	39650	4	1.94	
	2.18	803.25	11478	43393	4	1.77	
	2.09	839.04	11478	45326	4	1.70	
	1.89	924.27	11478	49930	4	1.54	
	1.84	950.06	11478	51324	4	1.50	
	1.72	1020.01	11478	55102	4	1.40	
	1.61	1086.42	11478	58690	4	1.31	
	1.46	1199.92	11478	64822	4	1.19	
	1.41	1237.20	11478	66835	4	1.15	**MW1484GH90H4**
	1.39	1258.33	11478	67977	4	1.13	
	1.25	1401.32	11478	75701	4	1.02	
	1.23	1426.47	11478	77004	4	1.00	
	1.10	1588.57	11478	77004	4	0.90	
	0.96	1815.51	11478	77004	4	0.79	
	0.94	1858.26	11478	77004	4	0.77	
	0.86	2043.12	11478	77004	4	0.70	
2	5.61	312.03	20233	16856	4	7.04	
	4.63	377.67	20233	20402	4	5.81	
	4.27	410.14	20233	22156	4	5.35	
	4.03	434.25	20233	23459	4	5.06	
	3.68	475.27	20233	25675	4	4.62	
	3.53	496.41	20233	26817	4	4.42	
	3.11	562.78	20233	30402	4	3.90	
	2.68	652.15	20233	35230	4	3.37	
	2.38	734.68	20233	39688	4	2.99	
	2.13	820.27	20233	44312	4	2.68	**MW1684GH90H4**
	1.90	920.38	20233	49720	4	2.39	
	1.63	1075.86	20233	58120	4	2.04	
	1.44	1218.18	20233	65808	4	1.80	
	1.24	1407.54	20233	76037	4	1.56	
	1.09	1607.88	20233	86860	4	1.37	
	0.99	1761.33	20233	95149	4	1.25	
	0.84	2077.99	20233	112256	4	1.06	
	0.73	2396.62	20233	118603	4	0.92	
	0.74	2365.25	20233	118603	5	0.93	
	0.65	2681.15	20233	118603	5	0.82	**MW1685GH90H4**
	0.57	3071.05	20233	118603	5	0.71	
	179	9.80	678	706	2	2.50	
	154	11.39	704	820	2	2.50	
	138	12.64	704	910	2	2.50	
	127	13.76	704	991	2	2.50	
	114	15.39	704	1109	2	2.38	
	104	16.83	704	1212	2	2.28	
	95	18.47	706	1330	2	2.18	**MW382GH90I4**
	86	20.37	706	1467	2	1.99	
	78	22.58	706	1626	2	1.80	
	68	25.58	706	1842	2	1.59	
	62	28.22	906	2033	2	1.44	
	55	31.91	906	2298	2	1.27	
	48	36.43	906	2624	2	1.11	
	44	40.04	906	2884	3	1.01	**MW383GH90I4**

(B) - See footnotes page on inside back cover

MSM integral gearmotors

1750 RPM – 60 Hz

Input power (Hp)	Speed (RPM)	Ratio	OHL (LBF) (B)	Output torque (in-lb)	Gear stage	Service factor (SF)	Catalog number
2 (cont.)	220	7.95	1025	573	2	2.50	MW482GH90I4
	183	9.55	1025	688	2	2.50	
	156	11.24	1098	810	2	2.50	
	139	12.59	1098	907	2	2.50	
	124	14.11	1098	1016	2	2.50	
	114	15.41	1098	1110	2	2.50	
	105	16.63	1098	1198	2	2.50	
	90	19.34	1135	1393	2	2.50	
	82	21.46	1135	1546	2	2.50	
	75	23.37	1135	1683	2	2.50	
	67	26.14	1135	1883	2	2.26	
	61	28.58	1334	2059	2	2.06	
	56	31.36	1334	2259	2	1.88	
	51	34.58	1334	2491	2	1.71	
	46	38.33	1334	2761	2	1.54	
	40	43.43	1334	3128	2	1.36	
	37	47.92	1334	3452	2	1.23	MW482GH90I4
	32	54.17	1334	3902	2	1.09	
	43	40.99	1334	2952	3	1.42	MW483GH90I4
	37	47.66	1334	3433	3	1.28	
	33	52.88	1334	3809	3	1.20	
	30	57.59	1334	4148	3	1.13	
	27	64.41	1334	4639	3	1.03	
	177	9.87	2200	711	2	2.51	MW582GH90I4
	156	11.19	2200	806	2	2.51	
	128	13.65	2200	983	2	2.51	
	118	14.8	2200	1066	2	2.51	
	104	16.8	2200	1210	2	2.51	
	97	17.96	2200	1294	2	2.51	
	86	20.38	2200	1468	2	2.51	
	80	21.98	2200	1583	2	2.51	
	74	23.8	2200	1714	2	2.51	
	68	25.88	2200	1864	2	2.51	
	63	27.94	2200	2012	2	2.51	
	58	30.29	2200	2182	2	2.51	
	53	32.95	2200	2373	2	2.51	
	49	36	2200	2593	2	2.5	
	44	39.52	2200	2847	2	2.3	
	40	43.62	2200	3142	2	2.1	
	36	49.21	2200	3545	2	1.85	
	32	54.12	2200	3898	2	1.7	
	29	59.92	2200	4316	2	1.55	
	25	70.27	2200	5061	2	1.3	
	23	77.54	2200	5585	2	1.2	
	20	86.26	2200	6213	2	1.05	
	46	38.17	2200	2749	3	2.5	MW583GH90I4
	37	47.88	2200	3449	3	1.99	
	33	53.2	2200	3832	3	1.79	
	29	61.18	2200	4407	3	1.56	
	27	65.8	2200	4739	3	1.45	
	23	76.67	2200	5522	3	1.24	
	21	83.13	2200	5988	3	1.15	
	19	90.44	2200	6514	3	1.05	

(B) - See footnotes page on inside back cover

MSM integral gearmotors

1750 RPM – 60 Hz

Input power (Hp)	Speed (RPM)	Ratio	OHL (LBF) (B)	Output torque (in-lb)	Gear stage	Service factor (SF)	Catalog number
2 (cont.)	182	9.63	2500	694	2	2.50	MW682GH90I4
	155	11.29	2500	813	2	2.50	
	130	13.45	2500	969	2	2.50	
	120	14.59	2500	1051	2	2.50	
	107	16.28	2500	1173	2	2.50	
	99	17.64	2500	1271	2	2.50	
	88	19.99	2500	1440	2	2.47	
	81	21.54	2500	1551	2	2.38	
	75	23.29	2500	1678	2	2.28	
	65	26.75	2500	1927	2	2.50	
	60	29.37	2500	2115	2	2.50	
	54	32.34	2500	2329	2	2.50	
	50	35.10	2500	2528	2	2.50	
	46	38.25	2500	2755	2	2.47	
	42	41.89	2500	3017	2	2.37	
	38	46.14	2500	3323	2	2.26	
	33	53.07	2500	3823	2	1.97	
	30	57.49	2500	4141	2	1.82	
	28	63.54	2500	4577	2	1.64	
	24	74.13	2500	5339	2	1.41	
	21	82.52	2500	5944	2	1.27	
	47	37.41	2500	2695	3	2.50	MW683GH90I4
	39	44.94	2500	3237	3	2.50	
	33	52.91	2500	3811	3	2.32	
	30	59.29	2500	4271	3	2.07	
	26	66.45	2500	4786	3	1.85	
	24	72.54	2500	5225	3	1.69	MW683GH90I4
	22	79.63	2500	5736	3	1.54	
	20	87.68	2500	6315	3	1.40	
	18	95.16	2500	6854	3	1.29	
	17	103.72	2500	7471	3	1.18	
	15	113.59	2500	8182	3	1.08	
	118	14.86	3611	1070	2	2.50	MW882GH90I4
	103	17.05	3611	1228	2	2.50	
	87	20.12	3611	1449	2	2.50	
	80	21.81	3611	1571	2	2.50	
	72	24.25	3611	1747	2	2.50	
	66	26.34	3611	1897	2	2.50	
	60	29.14	3611	2099	2	2.50	
	57	30.67	3611	2209	2	2.50	
	51	34.23	3611	2466	2	2.50	
	47	37.08	3611	2671	2	2.50	
	42	42.03	3611	3027	2	2.50	
	39	45.27	3611	3261	2	2.50	
	36	48.95	3611	3526	2	2.50	
	33	53.16	3611	3829	2	2.50	
	30	58.78	3611	4234	2	2.50	
	27	63.67	3611	4586	2	2.35	
	24	71.75	3611	5168	2	2.15	
	22	78.56	3611	5659	2	1.99	
	20	87.50	3611	6303	2	1.81	
	17	100.06	3611	7207	2	1.61	
	16	110.96	3611	7992	2	1.47	
	14	123.05	3611	8863	2	1.34	

(B) - See footnotes page on inside back cover

MSM integral gearmotors

1750 RPM – 60 Hz

Input power (Hp)	Speed (RPM)	Ratio	OHL (LBF) (B)	Output torque (in-lb)	Gear stage	Service factor (SF)	Catalog number
2 (cont.)	30	57.59	3611	4148	3	2.50	MW883GH90I4
	26	67.50	3611	4862	3	2.50	
	22	80.45	3611	5795	3	2.50	
	20	87.25	3611	6284	3	2.50	
	18	97.39	3611	7015	3	2.40	
	17	105.48	3611	7598	3	2.21	
	15	119.55	3611	8611	3	1.95	
	14	128.79	3611	9277	3	1.81	
	13	139.26	3611	10031	3	1.68	
	12	151.22	3611	10892	3	1.54	
	10	167.20	3611	12043	3	1.40	
	10	181.13	3611	13047	3	1.29	
	9	204.11	3611	14702	3	1.14	
	8	223.47	3611	16096	3	1.04	
	70	24.89	5433	1793	2	2.50	MW1082GH90I4
	61	28.56	5433	2057	2	2.50	
	52	33.71	5433	2428	2	2.50	
	48	36.54	5433	2632	2	2.50	
	43	40.62	5433	2926	2	2.50	
	40	44.12	5433	3178	2	2.50	
	36	48.81	5433	3516	2	2.50	
	33	52.40	5433	3774	2	2.50	
	31	56.47	5433	4067	2	2.50	
	29	61.12	5433	4402	2	2.50	
	26	66.48	5433	4788	2	2.42	
	24	72.74	5433	5239	2	2.31	
	21	82.39	5433	5934	3	2.50	MW1083GH90I4
	19	94.52	5433	6808	3	2.50	
	16	111.56	5433	8036	3	2.50	
	14	120.93	5433	8710	3	2.50	
	13	134.45	5433	9684	3	2.50	
	12	146.04	5433	10519	3	2.50	
	11	161.54	5433	11635	3	2.50	
	10	173.42	5433	12491	3	2.41	
	9	186.89	5433	13461	3	2.24	
	9	202.29	5433	14571	3	2.07	
	8	220.05	5433	15850	3	1.90	
	7	240.77	5433	17342	3	1.74	
	6.86	255.20	5433	18382	4	1.64	MW1084GH90I4
	6.28	278.83	5433	20084	4	1.50	
	5.81	301.21	5433	21696	4	1.39	
	5.49	318.85	5433	22966	4	1.31	
	5.32	329.10	5433	23705	4	1.27	
	4.97	351.96	5433	25351	4	1.19	
	4.41	397.15	5433	28606	4	1.05	
	3.89	450.40	5433	30093	4	0.93	
	3.70	473.17	5433	30093	4	0.88	
	3.40	515.41	5433	30093	4	0.81	
	3.20	546.18	5433	30093	4	0.76	
	0.68	2573.69	5433	30093	5	0.16	MW1085GH90I4
	0.62	2804.20	5433	30093	5	0.15	
	0.59	2944.27	5433	30093	5	0.14	
	0.56	3101.76	5433	30093	5	0.13	
	0.54	3230.33	5433	30093	5	0.13	
	0.50	3502.91	5433	30093	5	0.12	
	0.47	3726.73	5433	30093	5	0.11	
	0.45	3915.35	5433	30093	5	0.11	
	0.41	4237.98	5433	30093	5	0.10	
	0.38	4600.83	5433	30093	5	0.09	
	0.35	4958.19	5433	30093	5	0.08	
	0.32	5509.55	5433	30093	5	0.08	
	0.28	6324.24	5433	30093	5	0.07	
	0.24	7155.31	5433	30093	5	0.06	

(B) - See footnotes page on inside back cover

MSM integral gearmotors

1750 RPM – 60 Hz

Input power (Hp)	Speed (RPM)	Ratio	OHL (LBF) (B)	Output torque (in-lb)	Gear stage	Service factor (SF)	Catalog number
	19	90.32	6777	6506	3	2.50	
	17	102.35	6777	7372	3	2.50	
	15	120.11	6777	8651	3	2.50	
	13	131.03	6777	9438	3	2.50	
	12	142.93	6777	10295	3	2.50	
	11	154.25	6777	11110	3	2.50	**MW1283GH90I4**
	10	172.39	6777	12417	3	2.50	
	9	184.67	6777	13302	3	2.50	
	9	198.58	6777	14303	3	2.41	
	8	214.48	6777	15449	3	2.30	
	7.02	249.31	6777	17957	4	3.01	
	6.46	271.06	6777	19524	4	2.77	
	6.09	287.49	6777	20708	4	2.61	
	5.53	316.26	6777	22780	4	2.37	
	4.79	365.62	6777	26335	4	2.05	
	4.37	400.51	6777	28848	4	1.87	
	4.32	405.24	6777	29189	4	1.85	
	3.75	466.72	6777	33617	4	1.61	
	3.67	476.63	6777	34331	4	1.57	
	3.44	509.27	6777	36682	4	1.47	**MW1284GH90I4**
	3.32	527.55	6777	37999	4	1.42	
	3.07	570.63	6777	41102	4	1.31	
	2.89	605.91	6777	43643	4	1.24	
	2.64	662.74	6777	47736	4	1.13	
	2.53	690.67	6777	49748	4	1.09	
	2.28	766.10	6777	53991	4	0.98	
	2.23	783.00	6777	53991	4	0.96	
	2.02	868.40	6777	53991	4	0.86	
2 (cont.)	1.94	902.73	6777	53991	4	0.83	
	7.10	246.52	11478	17756	4	4.34	
	6.72	260.27	11478	18747	4	4.11	
	6.14	285.02	11478	20530	4	3.75	
	5.87	298.38	11478	21492	4	3.58	
	5.30	330.30	11478	23791	4	3.24	
	5.17	338.27	11478	24365	4	3.16	
	4.79	365.49	11478	26326	4	2.93	**MW1484GH90I4**
	4.57	383.10	11478	27594	4	2.79	
	4.09	427.73	11478	30809	4	2.50	
	4.01	436.57	11478	31446	4	2.45	
	3.62	483.09	11478	34796	4	2.21	
	3.56	490.94	11478	35362	4	2.18	
	3.38	517.02	11478	37240	4	2.07	
	3.12	560.48	11478	40370	4	1.91	
	2.96	592.18	11478	42654	4	1.81	
	2.75	635.41	11478	45767	4	1.68	
	2.50	699.28	11478	50368	4	1.53	
	2.38	733.96	11478	52866	4	1.46	
	2.18	803.25	11478	57857	4	1.33	
	2.09	839.04	11478	60435	4	1.27	
	1.89	924.27	11478	66574	4	1.16	
	1.84	950.06	11478	68431	4	1.13	**MW1484GH90I4**
	1.72	1020.01	11478	73470	4	1.05	
	1.61	1086.42	11478	77004	4	0.98	
	1.46	1199.92	11478	77004	4	0.89	
	1.41	1237.20	11478	77004	4	0.86	
	1.39	1258.33	11478	77004	4	0.85	
	1.25	1401.32	11478	77004	4	0.76	
	1.23	1426.47	11478	77004	4	0.75	

(B) - See footnotes page on inside back cover

MSM integral gearmotors

1750 RPM – 60 Hz

Input power (Hp)	Speed (RPM)	Ratio	OHL (LBF) (B)	Output torque (in-lb)	Gear stage	Service factor (SF)	Catalog number
2 (cont.)	5.61	312.03	20233	22475	4	5.28	MW1684GH90I4
	4.63	377.67	20233	27203	4	4.36	
	4.27	410.14	20233	29541	4	4.01	
	4.03	434.25	20233	31279	4	3.79	
	3.68	475.27	20233	34233	4	3.46	
	3.53	496.41	20233	35756	4	3.32	
	3.11	562.78	20233	40536	4	2.93	
	2.68	652.15	20233	46974	4	2.52	
	2.38	734.68	20233	52918	4	2.24	
	2.13	820.27	20233	59083	4	2.01	
	1.90	920.38	20233	66294	4	1.79	
	1.63	1075.86	20233	77493	4	1.53	
	1.44	1218.18	20233	87743	4	1.35	
	1.24	1407.54	20233	101383	4	1.17	
	1.09	1607.88	20233	115813	4	1.02	
	0.99	1761.33	20233	118603	4	0.93	
	0.84	2077.99	20233	118603	4	0.79	
3	179	9.80	678	1059	2	2.48	MW382GH100J4
	154	11.39	704	1231	2	2.30	
	138	12.64	704	1366	2	2.14	
	127	13.76	704	1487	2	1.96	
	114	15.39	704	1663	2	1.76	
	104	16.83	704	1818	2	1.61	
	95	18.47	706	1996	2	1.46	
	86	20.37	706	2201	2	1.33	
	78	22.58	706	2440	2	1.20	
	68	25.58	706	2764	2	1.06	
	220	7.95	1025	859	2	2.57	MW482GH100J4
	183	9.55	1025	1032	2	2.36	
	156	11.24	1098	1214	2	2.18	
	139	12.59	1098	1360	2	2.05	
	124	14.11	1098	1524	2	1.93	
	114	15.41	1098	1665	2	1.84	
	105	16.63	1098	1797	2	2.16	
	90	19.34	1135	2090	2	1.99	
	82	21.46	1135	2319	2	1.83	
	75	23.37	1135	2525	2	1.68	
	67	26.14	1135	2824	2	1.50	
	61	28.58	1334	3088	2	1.38	
	56	31.36	1334	3388	2	1.25	
	51	34.58	1334	3736	2	1.14	
	46	38.33	1334	4141	2	1.03	
	222	7.88	2200	851	2	3.45	MW582GH100J4
	177	9.87	2200	1066	2	3.45	
	156	11.19	2200	1209	2	3.45	
	128	13.65	2200	1475	2	3.45	
	118	14.8	2200	1599	2	3.45	
	104	16.8	2200	1815	2	3.45	
	97	17.96	2200	1940	2	3.45	
	86	20.38	2200	2202	2	3.07	
	80	21.98	2200	2375	2	2.87	
	74	23.8	2200	2571	2	2.66	MW582GH100J4
	68	25.88	2200	2796	2	2.45	
	63	27.94	2200	3019	2	2.03	
	58	30.29	2200	3273	2	1.93	
	53	32.95	2200	3560	2	1.8	
	49	36	2200	3890	2	1.67	
	44	39.52	2200	4270	2	1.53	
	40	43.62	2200	4713	2	1.4	
	36	49.21	2200	5317	2	1.23	
	32	54.12	2200	5847	2	1.13	
	29	59.92	2200	6474	2	1.03	
	46	38.17	2200	4124	3	1.66	MW583GH100J4
	37	47.88	2200	5173	3	1.32	
	33	53.2	2200	5748	3	1.19	
	29	61.18	2200	6610	3	1.04	

(B) - See footnotes page on inside back cover

MSM integral gearmotors

1750 RPM – 60 Hz

Input power (Hp)	Speed (RPM)	Ratio	OHL (LBF) (B)	Output torque (in-lb)	Gear stage	Service factor (SF)	Catalog number
	263	6.65	2500	718	2	3.46	
	218	8.02	2500	867	2	3.45	
	182	9.63	2500	1040	2	3.45	
	155	11.29	2500	1220	2	3.45	
	130	13.45	2500	1453	2	3.45	
	120	14.59	2500	1576	2	3.45	
	107	16.28	2500	1759	2	3.32	
	99	17.64	2500	1906	2	3.19	
	88	19.99	2500	2160	2	2.99	
	81	21.54	2500	2327	2	2.88	
	75	23.29	2500	2516	2	2.76	**MW682GH100J4**
	65	26.75	2500	2890	2	2.60	
	60	29.37	2500	3173	2	2.37	
	54	32.34	2500	3494	2	2.15	
	50	35.10	2500	3792	2	1.98	
	46	38.25	2500	4133	2	1.82	
	42	41.89	2500	4526	2	1.66	
	38	46.14	2500	4985	2	1.51	
	33	53.07	2500	5734	2	1.31	
	30	57.49	2500	6211	2	1.21	
	28	63.54	2500	6865	2	1.10	
	47	37.41	2500	4042	3	2.19	
	39	44.94	2500	4855	3	1.82	
	33	52.91	2500	5717	3	1.55	
	30	59.29	2500	6406	3	1.38	**MW683GH100J4**
	26	66.45	2500	7179	3	1.23	
	24	72.54	2500	7837	3	1.13	
	22	79.63	2500	8603	3	1.03	
3 (cont.)	0.61	2890.72	2500	8851	5	0.03	
	0.56	3143.48	2500	8851	5	0.03	
	0.52	3377.70	2500	8851	5	0.02	
	0.50	3525.06	2500	8851	5	0.02	
	0.43	4024.32	2500	8851	5	0.02	**MW685GH100J4**
	0.38	4575.38	2500	8851	5	0.02	
	0.33	5305.81	2500	8851	5	0.02	
	0.29	6116.34	2500	8851	5	0.01	
	0.25	7114.93	2500	8851	5	0.01	
	162	10.79	3611	1166	2	3.45	
	138	12.64	3611	1366	2	3.45	
	118	14.86	3611	1606	2	3.45	
	103	17.05	3611	1842	2	3.45	
	87	20.12	3611	2174	2	3.45	
	80	21.81	3611	2356	2	3.45	
	72	24.25	3611	2620	2	3.45	
	66	26.34	3611	2846	2	3.45	
	60	29.14	3611	3148	2	3.38	**MW882GH100J4**
	57	30.67	3611	3314	2	3.45	
	51	34.23	3611	3698	2	3.45	
	47	37.08	3611	4006	2	3.45	
	42	42.03	3611	4541	2	3.24	
	39	45.27	3611	4891	2	3.06	
	36	48.95	3611	5289	2	2.84	
	33	53.16	3611	5744	2	2.62	
	30	58.78	3611	6351	2	2.37	
	27	63.67	3611	6879	2	2.19	
	24	71.75	3611	7752	2	1.94	**MW882GH100J4**
	22	78.56	3611	8488	2	1.77	
	20	87.50	3611	9454	2	1.59	

(B) - See footnotes page on inside back cover

MSM integral gearmotors

1750 RPM – 60 Hz

Input power (Hp)	Speed (RPM)	Ratio	OHL (LBF) (B)	Output torque (in-lb)	Gear stage	Service factor (SF)	Catalog number
3 (cont.)	44	39.78	3611	4298	3	3.45	MW883GH100J4
	36	47.99	3611	5185	3	3.24	
	30	57.59	3611	6222	3	2.70	
	26	67.50	3611	7293	3	2.31	
	22	80.45	3611	8692	3	1.93	
	20	87.25	3611	9427	3	1.78	
	18	97.39	3611	10522	3	1.60	
	17	105.48	3611	11396	3	1.48	
	15	119.55	3611	12917	3	1.30	
	14	128.79	3611	13915	3	1.21	
	13	139.26	3611	15046	3	1.12	
	12	151.22	3611	16338	3	1.03	
	120	14.59	5433	1576	2	3.45	MW1082GH100J4
	104	16.83	5433	1818	2	3.45	
	88	19.78	5433	2137	2	3.45	
	83	21.18	5433	2288	2	3.45	
	70	24.89	5433	2689	2	3.45	
	61	28.56	5433	3086	2	3.45	
	52	33.71	5433	3642	2	3.45	
	48	36.54	5433	3948	2	3.45	
	43	40.62	5433	4389	2	3.45	
	40	44.12	5433	4767	2	3.44	
	36	48.81	5433	5274	2	3.26	
	33	52.40	5433	5661	2	3.12	
	31	56.47	5433	6101	2	2.96	
	29	61.12	5433	6604	2	2.82	
	26	66.48	5433	7183	2	2.63	
	24	72.74	5433	7859	2	2.43	
	29	59.81	5433	6462	3	3.45	MW1083GH100J4
	25	70.08	5433	7572	3	3.45	
	21	82.39	5433	8902	3	3.38	
	19	94.52	5433	10212	3	2.95	
	16	111.56	5433	12053	3	2.50	
	14	120.93	5433	13066	3	2.30	
	13	134.45	5433	14526	3	2.07	
	12	146.04	5433	15779	3	1.91	
	11	161.54	5433	17453	3	1.72	
	10	173.42	5433	18737	3	1.61	
	9	186.89	5433	20192	3	1.49	
	9	202.29	5433	21856	3	1.38	
	8	220.05	5433	23775	3	1.27	
	7	240.77	5433	26013	3	1.16	
	6.86	255.20	5433	27573	4	1.09	MW1084GH100J4
	6.28	278.83	5433	30093	4	1.00	
	5.81	301.21	5433	30093	4	0.92	
	5.49	318.85	5433	30093	4	0.87	
	5.32	329.10	5433	30093	4	0.85	
	4.97	351.96	5433	30093	4	0.79	
	4.41	397.15	5433	30093	4	0.70	
	78	22.39	6777	2419	2	3.45	MW1282GH100J4
	71	24.77	6777	2676	2	3.45	
	73	23.96	6777	2589	2	3.45	
	63	27.66	6777	2988	2	3.45	
	54	32.50	6777	3511	2	3.45	
	48	36.83	6777	3979	2	3.45	
	40	43.21	6777	4669	2	3.45	
	37	47.14	6777	5093	2	3.45	
	34	51.43	6777	5557	2	3.45	
	32	55.50	6777	5996	2	3.45	
	28	62.03	6777	6702	2	3.27	
	26	66.44	6777	7178	2	3.09	
	24	71.45	6777	7720	2	2.91	
	23	77.17	6777	8338	2	2.73	
	26	66.61	6777	7197	3	3.45	MW1283GH100J4
	23	76.87	6777	8305	3	3.45	
	19	90.32	6777	9758	3	3.45	
	17	102.35	6777	11058	3	3.45	

(B) - See footnotes page on inside back cover

MSM integral gearmotors

1750 RPM – 60 Hz

Input power (Hp)	Speed (RPM)	Ratio	OHL (LBF) (B)	Output torque (in-lb)	Gear stage	Service factor (SF)	Catalog number
3 (cont.)	15	120.11	6777	12977	3	3.45	MW1283GH100J4
	13	131.03	6777	14157	3	3.45	
	12	142.93	6777	15443	3	3.45	
	11	154.25	6777	16666	3	3.24	
	10	172.39	6777	18626	3	2.90	
	9	184.67	6777	19952	3	2.71	
	9	198.58	6777	21455	3	2.52	
	8	214.48	6777	23173	3	2.33	
	7.02	249.31	6777	26936	4	2.00	MW1284GH100J4
	6.46	271.06	6777	29286	4	1.84	
	6.09	287.49	6777	31062	4	1.74	
	5.53	316.26	6777	34170	4	1.58	
	4.79	365.62	6777	39503	4	1.37	
	4.37	400.51	6777	43273	4	1.25	
	4.32	405.24	6777	43783	4	1.23	
	3.75	466.72	6777	50425	4	1.07	
	3.67	476.63	6777	51497	4	1.05	
	3.44	509.27	6777	53991	4	0.98	
	3.32	527.55	6777	53991	4	0.95	
	3.07	570.63	6777	53991	4	0.88	
	2.89	605.91	6777	53991	4	0.82	
	2.64	662.74	6777	53991	4	0.75	
	2.53	690.67	6777	53991	4	0.72	
5	18	95.74	11478	10344	3	3.45	MW1483GH100J4
	17	105.94	11478	11446	3	3.45	
	14	123.98	11478	13395	3	3.45	
	13	134.28	11478	14508	3	3.45	
	12	149.86	11478	16191	3	3.45	
	11	158.88	11478	17166	3	3.34	
	10	180.11	11478	19460	3	3.01	
	9	192.71	11478	20821	3	2.85	
	9	202.69	11478	21899	3	2.73	
	8	218.71	11478	23630	3	2.55	
	7.10	246.52	11478	26635	4	2.89	MW1484GH100J4
	6.72	260.27	11478	28120	4	2.74	
	6.14	285.02	11478	30795	4	2.50	
	5.87	298.38	11478	32238	4	2.39	
	5.30	330.30	11478	35687	4	2.16	
	5.17	338.27	11478	36547	4	2.11	
	4.79	365.49	11478	39489	4	1.95	
	4.57	383.10	11478	41391	4	1.86	
	4.09	427.73	11478	46213	4	1.67	
	4.01	436.57	11478	47169	4	1.63	
	3.62	483.09	11478	52194	4	1.48	
	3.56	490.94	11478	53042	4	1.45	
	3.38	517.02	11478	55860	4	1.38	
	3.12	560.48	11478	60555	4	1.27	
	2.96	592.18	11478	63981	4	1.20	
	2.75	635.41	11478	68651	4	1.12	
	2.50	699.28	11478	75552	4	1.02	
	2.38	733.96	11478	77004	4	0.97	
	2.18	803.25	11478	77004	4	0.89	
	2.09	839.04	11478	77004	4	0.85	
	1.89	924.27	11478	77004	4	0.77	
	1.84	950.06	11478	77004	4	0.75	
	1.72	1020.01	11478	77004	4	0.70	
	5.61	312.03	20233	33712	4	3.52	MW1684GH100J4
	4.63	377.67	20233	40804	4	2.91	
	4.27	410.14	20233	44312	4	2.68	
	4.03	434.25	20233	46918	4	2.53	
	3.68	475.27	20233	51350	4	2.31	
	3.53	496.41	20233	53634	4	2.21	
	3.11	562.78	20233	60804	4	1.95	
	2.68	652.15	20233	70461	4	1.68	

(B) - See footnotes page on inside back cover

MSM integral gearmotors

1750 RPM – 60 Hz

Input power (Hp)	Speed (RPM)	Ratio	OHL (LBF) (B)	Output torque (in-lb)	Gear stage	Service factor (SF)	Catalog number
5 (cont.)	2.38	734.68	20233	79377	4	1.49	MW1684GH100J4
	2.13	820.27	20233	88625	4	1.34	
	1.90	920.38	20233	99441	4	1.19	
	1.63	1075.86	20233	116239	4	1.02	
	1.44	1218.18	20233	118603	4	0.90	
	1.24	1407.54	20233	118603	4	0.78	
	1.09	1607.88	20233	118603	4	0.68	
	220	7.95	1025	1432	2	1.54	MW482GH112L4
	183	9.55	1025	1720	2	1.41	
	156	11.24	1098	2024	2	1.31	
	139	12.59	1098	2267	2	1.23	
	124	14.11	1098	2541	2	1.16	
	114	15.41	1098	2775	2	1.11	
	105	16.63	1098	2995	2	1.30	
	90	19.34	1135	3483	2	1.20	
	82	21.46	1135	3864	2	1.10	
	75	23.37	1135	4208	2	1.01	
	222	7.88	2200	1419	2	2.78	MW582GH112L4
	177	9.87	2200	1777	2	2.78	
	156	11.19	2200	2015	2	2.78	
	128	13.65	2200	2458	2	2.7	
	118	14.8	2200	2665	2	2.5	
	104	16.8	2200	3025	2	2.22	
	97	17.96	2200	3234	2	2.08	
	86	20.38	2200	3670	2	1.84	
	80	21.98	2200	3958	2	1.72	
	74	23.8	2200	4286	2	1.6	
	68	25.88	2200	4660	2	1.47	
	63	27.94	2200	5031	2	1.22	
	58	30.29	2200	5454	2	1.16	
	53	32.95	2200	5933	2	1.08	
	49	36	2200	6483	2	1	
	263	6.65	2500	1197	2	2.78	MW682GH112L4
	218	8.02	2500	1444	2	2.78	
	182	9.63	2500	1734	2	2.77	
	155	11.29	2500	2033	2	2.77	
	130	13.45	2500	2422	2	2.75	
	120	14.59	2500	2627	2	2.65	
	107	16.28	2500	2932	2	2.51	
	99	17.64	2500	3176	2	2.42	
	88	19.99	2500	3600	2	2.27	
	81	21.54	2500	3879	2	2.19	
	75	23.29	2500	4194	2	2.11	
	65	26.75	2500	4817	2	1.56	
	60	29.37	2500	5289	2	1.42	
	54	32.34	2500	5824	2	1.29	
	50	35.10	2500	6321	2	1.19	
	46	38.25	2500	6888	2	1.09	
	42	41.89	2500	7543	2	1.00	

(B) - See footnotes page on inside back cover

MSM integral gearmotors

1750 RPM – 60 Hz

Input power (Hp)	Speed (RPM)	Ratio	OHL (LBF) (B)	Output torque (in-lb)	Gear stage	Service factor (SF)	Catalog number
5 (cont.)	198	8.85	3611	1594	2	2.77	MW882GH112L4
	162	10.79	3611	1943	2	2.77	
	138	12.64	3611	2276	2	2.77	
	118	14.86	3611	2676	2	2.77	
	103	17.05	3611	3070	2	2.77	
	87	20.12	3611	3623	2	2.77	
	80	21.81	3611	3927	2	2.77	
	72	24.25	3611	4367	2	2.77	
	66	26.34	3611	4743	2	2.68	
	60	29.14	3611	5247	2	2.55	
	57	30.67	3611	5523	2	2.72	
	51	34.23	3611	6164	2	2.44	
	47	37.08	3611	6677	2	2.25	
	42	42.03	3611	7568	2	1.99	
	39	45.27	3611	8152	2	1.85	
	36	48.95	3611	8814	2	1.71	
	33	53.16	3611	9573	2	1.57	
	30	58.78	3611	10585	2	1.42	
	27	63.67	3611	11465	2	1.31	
	24	71.75	3611	12920	2	1.16	
	22	78.56	3611	14146	2	1.06	MW882GH112L4
	44	39.78	3611	7163	3	2.35	MW883GH112L4
	36	47.99	3611	8642	3	1.95	
	30	57.59	3611	10370	3	1.62	
	26	67.5	3611	12155	3	1.38	
	22	80.45	3611	14487	3	1.16	
	20	87.25	3611	15711	3	1.07	
	143	12.28	5433	2211	2	2.77	MW1082GH112L4
	120	14.59	5433	2627	2	2.77	
	104	16.83	5433	3031	2	2.77	
	88	19.78	5433	3562	2	2.77	
	83	21.18	5433	3814	2	2.77	
	70	24.89	5433	4482	2	2.77	
	61	28.56	5433	5143	2	2.77	
	52	33.71	5433	6070	2	2.77	
	48	36.54	5433	6580	2	2.77	
	43	40.62	5433	7315	2	2.77	
	40	44.12	5433	7945	2	2.77	
	36	48.81	5433	8789	2	2.77	
	33	52.40	5433	9436	2	2.67	
	31	56.47	5433	10169	2	2.51	
	29	61.12	5433	11006	2	2.35	
	26	66.48	5433	11971	2	2.19	
	24	72.74	5433	13098	2	2.03	
	36	49.04	5433	8831	3	2.77	MW1083GH112L4
	29	59.81	5433	10770	3	2.77	
	25	70.08	5433	12619	3	2.38	
	21	82.39	5433	14836	3	2.03	
	19	94.52	5433	17020	3	1.77	
	16	111.56	5433	20089	3	1.50	
	14	120.93	5433	21776	3	1.38	
	13	134.45	5433	24211	3	1.24	
	6.86	255.20	5433	30093	4	0.65	MW1084GH112L4
	6.28	278.83	5433	30093	4	0.60	

(B) - See footnotes page on inside back cover

MSM integral gearmotors

1750 RPM – 60 Hz

Input power (Hp)	Speed (RPM)	Ratio	OHL (LBF) (B)	Output torque (in-lb)	Gear stage	Service factor (SF)	Catalog number
5 (cont.)	126	13.92	6777	2507	2	2.77	MW1282GH112L4
	108	16.27	6777	2930	2	2.77	
	94	18.65	6777	3358	2	2.77	
	81	21.57	6777	3884	2	2.77	
	78	22.39	6777	4032	2	2.77	
	71	24.77	6777	4460	2	2.77	
	73	23.96	6777	4315	2	2.77	
	63	27.66	6777	4981	2	2.77	
	54	32.50	6777	5852	2	2.77	
	48	36.83	6777	6632	2	2.77	
	40	43.21	6777	7781	2	2.77	
	37	47.14	6777	8489	2	2.77	
	34	51.43	6777	9261	2	2.77	
	32	55.50	6777	9994	2	2.77	
	28	62.03	6777	11170	2	2.77	
	26	66.44	6777	11964	2	2.72	
	24	71.45	6777	12866	2	2.56	
	23	77.17	6777	13896	2	2.40	
	31	56.05	6777	10093	3	2.77	MW1283GH112L4
	26	66.61	6777	11995	3	2.77	
	23	76.87	6777	13842	3	2.77	
	19	90.32	6777	16264	3	2.77	
	17	102.35	6777	18430	3	2.77	
	15	120.11	6777	21628	3	2.50	
	13	131.03	6777	23595	3	2.29	
	12	142.93	6777	25738	3	2.10	
	11	154.25	6777	27776	3	1.94	
	10	172.39	6777	31043	3	1.74	
	9	184.67	6777	33254	3	1.62	
	9	198.58	6777	35759	3	1.51	
	8	214.48	6777	38622	3	1.40	
	7.02	249.31	6777	44894	4	1.20	MW1284GH112L4
	6.46	271.06	6777	48809	4	1.11	
	6.09	287.49	6777	51769	4	1.04	MW1284GH112L4
	5.53	316.26	6777	53991	4	0.95	
	4.79	365.62	6777	53991	4	0.82	
	4.37	400.51	6777	53991	4	0.75	
	4.32	405.24	6777	53991	4	0.74	
	3.75	466.72	6777	53991	4	0.64	
	3.67	476.63	6777	53991	4	0.63	
	29	59.55	11478	10723	3	2.77	MW1483GH112L4
	25	69.59	11478	12531	3	2.77	
	22	79.78	11478	14366	3	2.77	
	19	92.24	11478	16610	3	2.77	
	18	95.74	11478	17240	3	2.77	
	17	105.94	11478	19077	3	2.77	
	14	123.98	11478	22325	3	2.77	
	13	134.28	11478	24180	3	2.77	
	12	149.86	11478	26986	3	2.76	
	11	158.88	11478	28610	3	2.68	
	10	180.11	11478	32433	3	2.37	
	9	192.71	11478	34702	3	2.22	
	9	202.69	11478	36499	3	2.11	
	8	218.71	11478	39383	3	1.96	

(B) - See footnotes page on inside back cover

MSM integral gearmotors

1750 RPM – 60 Hz

Input power (Hp)	Speed (RPM)	Ratio	OHL (LBF) (B)	Output torque (in-lb)	Gear stage	Service factor (SF)	Catalog number
5 (cont.)	7.10	246.52	11478	44391	4	1.73	MW1484GH112L4
	6.72	260.27	11478	46867	4	1.64	
	6.14	285.02	11478	51324	4	1.50	
	5.87	298.38	11478	53729	4	1.43	
	5.30	330.30	11478	59478	4	1.29	
	5.17	338.27	11478	60912	4	1.26	
	4.79	365.49	11478	65815	4	1.17	
	4.57	383.10	11478	68985	4	1.12	
	4.09	427.73	11478	77004	4	1.00	
	4.01	436.57	11478	77004	4	0.98	
	3.62	483.09	11478	77004	4	0.89	
	3.56	490.94	11478	77004	4	0.87	
	3.38	517.02	11478	77004	4	0.83	
	3.12	560.48	11478	77004	4	0.76	
	2.96	592.18	11478	77004	4	0.72	
	2.75	635.41	11478	77004	4	0.67	
	2.50	699.28	11478	77004	4	0.61	
	5.61	312.03	20233	56187	4	2.11	MW1684GH112L4
	4.63	377.67	20233	68007	4	1.74	
	4.27	410.14	20233	73854	4	1.61	
	4.03	434.25	20233	78196	4	1.52	
	3.68	475.27	20233	85583	4	1.39	
	3.53	496.41	20233	89389	4	1.33	
	3.11	562.78	20233	101340	4	1.17	
	2.68	652.15	20233	117434	4	1.01	
	2.38	734.68	20233	118603	4	0.90	
	2.13	820.27	20233	118603	4	0.80	
	1.90	920.38	20233	118603	4	0.72	
	1.63	1075.86	20233	118603	4	0.61	
7.5	222	7.88	2200	2128	2	3.03	MW582GH132M4
	177	9.87	2200	2666	2	2.45	
	156	11.19	2200	3022	2	2.17	
	128	13.65	2200	3687	2	1.8	
	118	14.8	2200	3998	2	1.67	
	104	16.8	2200	4538	2	1.48	
	97	17.96	2200	4851	2	1.39	
	86	20.38	2200	5505	2	1.23	
	80	21.98	2200	5937	2	1.15	
	74	23.8	2200	6429	2	1.07	
	263	6.65	2500	1796	2	3.59	MW682GH132M4
	218	8.02	2500	2166	2	3.39	
	182	9.63	2500	2601	2	3.16	
	155	11.29	2500	3050	2	2.87	
	130	13.45	2500	3633	2	2.44	
	120	14.59	2500	3941	2	2.25	
	107	16.28	2500	4397	2	2.01	MW682GH132M4
	99	17.64	2500	4765	2	1.86	
	88	19.99	2500	5399	2	1.64	
	81	21.54	2500	5818	2	1.52	
	75	23.29	2500	6291	2	1.41	
	65	26.75	2500	7225	2	1.04	
	198	8.85	3611	2390	2	4.02	MW882GH132M4
	162	10.79	3611	2914	2	3.82	
	138	12.64	3611	3414	2	3.62	
	118	14.86	3611	4014	2	3.41	
	103	17.05	3611	4605	2	3.21	
	87	20.12	3611	5435	2	2.97	
	80	21.81	3611	5891	2	2.85	
	72	24.25	3611	6550	2	2.57	
	66	26.34	3611	7115	2	2.36	
	60	29.14	3611	7871	2	2.14	
	57	30.67	3611	8284	2	1.82	
	51	34.23	3611	9246	2	1.63	
	47	37.08	3611	10016	2	1.50	
	42	42.03	3611	11353	2	1.33	
	39	45.27	3611	12228	2	1.23	
	36	48.95	3611	13222	2	1.14	
	33	53.16	3611	14359	2	1.05	

(B) - See footnotes page on inside back cover

MSM integral gearmotors

1750 RPM – 60 Hz

Input power (Hp)	Speed (RPM)	Ratio	OHL (LBF) (B)	Output torque (in-lb)	Gear stage	Service factor (SF)	Catalog number
	44	39.78	3611	10745	3	1.57	
	36	47.99	3611	12962	3	1.30	**MW883GH132M4**
	30	57.59	3611	15555	3	1.08	
	184	9.52	5433	2571	2	4.37	
	158	11.08	5433	2993	2	4.36	
	143	12.28	5433	3317	2	4.36	
	120	14.59	5433	3941	2	4.36	
	104	16.83	5433	4546	2	4.37	
	88	19.78	5433	5343	2	4.25	
	83	21.18	5433	5721	2	3.90	
	70	24.89	5433	6723	2	3.55	
	61	28.56	5433	7714	2	3.27	
	52	33.71	5433	9105	2	2.96	**MW1082GH132M4**
	48	36.54	5433	9870	2	2.81	
	43	40.62	5433	10972	2	2.64	
	40	44.12	5433	11917	2	2.50	
	36	48.81	5433	13184	2	2.28	
	33	52.4	5433	14154	2	2.13	
	31	56.47	5433	15253	2	1.97	
	29	61.12	5433	16509	2	1.82	
	26	66.48	5433	17957	2	1.68	
	24	72.74	5433	19648	2	1.53	
	36	49.04	5433	13246	3	2.27	
	29	59.81	5433	16155	3	1.86	
	25	70.08	5433	18929	3	1.59	**MW1083GH132M4**
	21	82.39	5433	22254	3	1.35	
	19	94.52	5433	25531	3	1.18	
	16	111.56	5433	30133	3	1.00	
	166	10.56	6777	2852	2	4.28	
	140	12.47	6777	3368	2	4.13	
	126	13.92	6777	3760	2	4.01	
7.5 (cont.)	108	16.27	6777	4395	2	3.82	
	94	18.65	6777	5037	2	3.64	
	81	21.57	6777	5826	2	3.42	**MW1282GH132M4**
	78	22.39	6777	6048	2	3.36	
	71	24.77	6777	6691	2	3.21	
	73	23.96	6777	6472	2	4.37	
	63	27.66	6777	7471	2	4.36	
	54	32.50	6777	8778	2	4.37	
	48	36.83	6777	9948	2	4.36	
	40	43.21	6777	11671	2	4.16	
	37	47.14	6777	12733	2	3.89	
	34	51.43	6777	13892	2	3.63	
	32	55.5	6777	14991	2	3.37	**MW1282GH132M4**
	28	62.03	6777	16755	2	3.01	
	26	66.44	6777	17946	2	2.81	
	24	71.45	6777	19299	2	2.61	
	23	77.17	6777	20844	2	2.42	
	40	43.47	6777	11742	3	4.36	
	35	50.57	6777	13659	3	3.95	
	31	56.05	6777	15140	3	3.57	
	26	66.61	6777	17992	3	3.00	
	23	76.87	6777	20763	3	2.60	
	19	90.32	6777	24396	3	2.21	
	17	102.35	6777	27645	3	1.95	**MW1283GH132M4**
	15	120.11	6777	32443	3	1.66	
	13	131.03	6777	35392	3	1.53	
	12	142.93	6777	38606	3	1.40	
	11	154.25	6777	41664	3	1.30	
	10	172.39	6777	46564	3	1.16	
	9	184.67	6777	49881	3	1.08	
	9	198.58	6777	53638	3	1.01	
	7.02	249.31	6777	53991	4	0.80	**MW1284GH132M4**
	6.46	271.06	6777	53991	4	0.74	

(B) - See footnotes page on inside back cover

MSM integral gearmotors

1750 RPM – 60 Hz

Input power (Hp)	Speed (RPM)	Ratio	OHL (LBF) (B)	Output torque (in-lb)	Gear stage	Service factor (SF)	Catalog number
7.5 (cont.)	151	11.61	10832	3136	2	4.35	MW1482GH132M4
	131	13.32	10832	3598	2	4.23	
	119	14.68	10832	3965	2	4.13	
	101	17.35	10832	4686	2	3.93	
	88	19.78	11478	5343	2	3.74	
	77	22.74	11478	6142	2	3.53	
	67	26.00	11478	7023	2	3.32	
	66	26.51	11478	7161	2	4.36	
	58	30.39	11478	8209	2	4.37	
	50	35.14	11478	9492	2	4.36	
	48	36.47	11478	9851	2	4.37	
	43	40.36	11478	10902	2	4.33	
	37	47.23	11478	12757	2	3.84	
	34	51.15	11478	13816	2	3.61	
	31	57.09	11478	15420	2	3.30	
	29	60.53	11478	16350	2	3.15	
	26	68.61	11478	18532	2	2.83	
	24	73.42	11478	19831	2	2.67	
	23	77.21	11478	20855	2	2.56	
	21	83.32	11478	22505	2	2.40	
	39	45.18	11478	12203	3	4.37	MW1483GH132M4
	33	53.34	11478	14408	3	4.22	
	29	59.55	11478	16085	3	4.11	
	25	69.59	11478	18797	3	3.93	
	22	79.78	11478	21549	3	3.57	
	19	92.24	11478	24915	3	3.09	
	18	95.74	11478	25860	3	2.98	
	17	105.94	11478	28615	3	2.69	
	14	123.98	11478	33488	3	2.30	
	13	134.28	11478	36270	3	2.12	
	12	149.86	11478	40478	3	1.90	
	11	158.88	11478	42915	3	1.79	
	10	180.11	11478	48649	3	1.58	
	9	192.71	11478	52052	3	1.48	
	9	202.69	11478	54748	3	1.41	
	8	218.71	11478	59075	3	1.30	
	7.10	246.52	11478	66587	4	1.16	MW1484GH132M4
	6.72	260.27	11478	70300	4	1.10	
	6.14	285.02	11478	76986	4	1.00	
	5.87	298.38	11478	77004	4	0.96	
	5.30	330.30	11478	77004	4	0.86	
	5.17	338.27	11478	77004	4	0.84	MW1484GH132M4
	4.79	365.49	11478	77004	4	0.78	
	4.57	383.10	11478	77004	4	0.74	
	4.09	427.73	11478	77004	4	0.67	
	121	14.51	16653	3919	2	4.34	MW1682GH132M4
	106	16.53	16653	4465	2	4.22	
	97	18.13	17897	4897	2	4.12	
	80	21.85	17897	5902	2	3.88	
	72	24.28	17897	6558	2	3.73	
	64	27.50	17897	7428	2	3.54	
	55	32.07	19910	8662	2	4.37	
	48	36.55	19910	9872	2	4.37	
	42	42.03	19910	11353	2	4.35	
	36	48.04	20233	12976	2	4.23	
	31	55.68	20233	15040	2	3.86	
	29	60.66	20233	16385	2	3.61	
	26	67.58	20233	18254	2	3.30	
	24	71.58	20233	19334	2	3.14	
	22	80.50	20233	21744	2	2.85	
	20	86.06	20233	23245	2	2.69	

(B) - See footnotes page on inside back cover

MSM integral gearmotors

1750 RPM – 60 Hz

Input power (Hp)	Speed (RPM)	Ratio	OHL (LBF) (B)	Output torque (in-lb)	Gear stage	Service factor (SF)	Catalog number
7.5 (cont.)	30	59.27	20233	16009	3	4.35	MW1683GH132M4
	26	67.98	20233	18362	3	4.23	
	23	74.92	20233	20236	3	4.13	
	20	88.59	20233	23929	3	3.92	
	17	100.98	20233	27275	3	3.74	
	15	116.11	20233	31362	3	3.53	
	13	132.73	20233	35851	3	3.31	
	11	153.81	20233	41545	3	2.85	
	10	167.58	20233	45265	3	2.62	
	9	186.69	20233	50426	3	2.35	
	9	197.75	20233	53414	3	2.22	
	8	222.39	20233	60069	3	1.97	
	7	237.76	20233	64221	3	1.85	
10	222	7.88	2200	2838	3	2.27	MW582GH132N4
	177	9.87	2200	3555	3	1.84	
	156	11.19	2200	4030	3	1.63	
	128	13.65	2200	4916	3	1.35	
	118	14.8	2200	5330	3	1.25	
	104	16.8	2200	6050	3	1.11	
	97	17.96	2200	6468	3	1.04	
	263	6.65	2500	2395	2	2.69	MW682GH132N4
	218	8.02	2500	2888	2	2.54	
	182	9.63	2500	3468	2	2.37	
	155	11.29	2500	4066	2	2.15	
	130	13.45	2500	4844	2	1.83	
	120	14.59	2500	5254	2	1.68	
	107	16.28	2500	5863	2	1.51	
	99	17.64	2500	6353	2	1.39	
	88	19.99	2500	7199	2	1.23	
	81	21.54	2500	7757	2	1.14	
	75	23.29	2500	8388	2	1.06	
	198	8.85	3611	3187	2	3.02	MW882GH132N4
	162	10.79	3611	3886	2	2.86	
	138	12.64	3611	4552	2	2.72	
	118	14.86	3611	5352	2	2.55	
	103	17.05	3611	6140	2	2.41	
	87	20.12	3611	7246	2	2.23	
	80	21.81	3611	7855	2	2.14	
	72	24.25	3611	8733	2	1.93	
	66	26.34	3611	9486	2	1.77	
	60	29.14	3611	10495	2	1.60	
	57	30.67	3611	11046	2	1.36	
	51	34.23	3611	12328	2	1.22	
	47	37.08	3611	13354	2	1.13	
	44	39.78	3611	14326	3	1.17	MW883GH132N4
	184	9.52	5433	3429	2	3.27	MW1082GH132N4
	158	11.08	5433	3990	2	3.27	
	143	12.28	5433	4423	2	3.27	
	120	14.59	5433	5254	2	3.27	
	104	16.83	5433	6061	2	3.27	
	88	19.78	5433	7124	2	3.19	
	83	21.18	5433	7628	2	2.92	
	70	24.89	5433	8964	2	2.66	
	61	28.56	5433	10286	2	2.45	
	52	33.71	5433	12140	2	2.22	
	48	36.54	5433	13160	2	2.11	
	43	40.62	5433	14629	2	1.98	
	40	44.12	5433	15890	2	1.88	
	36	48.81	5433	17579	2	1.71	
	33	52.40	5433	18871	2	1.59	
	31	56.47	5433	20337	2	1.48	
	29	61.12	5433	22012	2	1.37	
	26	66.48	5433	23942	2	1.26	
	24	72.74	5433	26197	2	1.15	

(B) - See footnotes page on inside back cover

MSM integral gearmotors

1750 RPM – 60 Hz

Input power (Hp)	Speed (RPM)	Ratio	OHL (LBF) (B)	Output torque (in-lb)	Gear stage	Service factor (SF)	Catalog number
10 (cont.)	36	49.04	5433	17661	3	1.70	MW1083GH132N4
	29	59.81	5433	21540	3	1.40	
	25	70.08	5433	25239	3	1.19	
	21	82.39	5433	29672	3	1.01	
	166	10.56	6777	3803	2	3.21	MW1282GH132N4
	140	12.47	6777	4491	2	3.09	
	126	13.92	6777	5013	2	3.01	
	108	16.27	6777	5860	2	2.87	
	94	18.65	6777	6717	2	2.73	
	81	21.57	6777	7768	2	2.57	
	78	22.39	6777	8064	2	2.52	
	71	24.77	6777	8921	2	2.41	
	73	23.96	6777	8629	2	3.27	
	63	27.66	6777	9962	2	3.27	
	54	32.50	6777	11705	2	3.27	
	48	36.83	6777	13264	2	3.27	
	40	43.21	6777	15562	2	3.12	
	37	47.14	6777	16977	2	2.92	
	34	51.43	6777	18522	2	2.72	
	32	55.50	6777	19988	2	2.52	
	28	62.03	6777	22340	2	2.26	
	26	66.44	6777	23928	2	2.11	
	24	71.45	6777	25732	2	1.96	
	23	77.17	6777	27792	2	1.82	
	40	43.47	6777	15655	3	3.27	MW1283GH132N4
	35	50.57	6777	18212	3	2.96	
	31	56.05	6777	20186	3	2.67	
	26	66.61	6777	23989	3	2.25	
	23	76.87	6777	27684	3	1.95	
	19	90.32	6777	32528	3	1.66	
	17	102.35	6777	36861	3	1.46	
	15	120.11	6777	43257	3	1.25	
	13	131.03	6777	47190	3	1.14	
	12	142.93	6777	51475	3	1.05	
	151	11.61	108.32	4181	2	3.26	MW1482GH132N4
	131	13.32	108.32	4797	2	3.17	
	119	14.68	108.32	5287	2	3.09	
	101	17.35	108.32	6248	2	2.94	
	88	19.78	11478	7124	2	2.81	
	77	22.74	11478	8190	2	2.65	
	67	26	11478	9364	2	2.49	
	66	26.51	11478	9547	2	3.27	
	58	30.39	11478	10945	2	3.27	
	50	35.14	11478	12655	2	3.27	MW1482GH132N4
	48	36.47	11478	13134	2	3.27	
	43	40.36	11478	14535	2	3.25	
	37	47.23	11478	17010	2	2.88	
	34	51.15	11478	18421	2	2.71	
	31	57.09	11478	20561	2	2.48	
	29	60.53	11478	21799	2	2.3.6	
	26	68.61	11478	24709	2	2.12	
	24	73.42	11478	26442	2	2.01	
	23	77.21	11478	27807	2	1.92	
	21	83.32	11478	30007	2	1.8	

(B) - See footnotes page on inside back cover

MSM integral gearmotors

1750 RPM – 60 Hz

Input power (Hp)	Speed (RPM)	Ratio	OHL (LBF) (B)	Output torque (in-lb)	Gear stage	Service factor (SF)	Catalog number
10 (cont.)	39	45.18	11478	16271	3	3.27	MW1483GH132N4
	33	53.34	11478	19210	3	3.17	
	29	59.55	11478	21447	3	3.08	
	25	69.59	11478	25062	3	2.95	
	22	79.78	11478	28732	3	2.68	
	19	92.24	11478	33220	3	2.32	
	18	95.74	11478	34480	3	2.23	
	17	105.94	11478	38154	3	2.02	
	14	123.98	11478	44651	3	1.72	
	13	134.28	11478	48360	3	1.59	
	12	149.86	11478	53971	3	1.43	
	11	158.88	11478	57219	3	1.35	
	10	180.11	11478	64865	3	1.19	
	9	102.71	11478	69403	3	1.11	
	9	202.69	11478	72997	3	1.05	
	121	14.51	16653	5226	2	3.26	MW1682GH132N4
	106	16.53	16653	5953	2	3.17	
	97	18.13	17897	6529	2	3.09	
	80	21.85	17897	7869	2	2.91	
	72	24.28	17897	8744	2	2.80	
	64	27.50	17897	9904	2	2.65	
	55	32.07	19910	11550	2	3.27	
	48	36.55	19910	13163	2	3.27	
	42	42.03	19910	15137	2	3.26	
	36	48.04	20233	17301	2	3.17	
	31	55.68	20233	20053	2	2.90	
	29	60.66	20233	21846	2	2.70	
	26	67.58	20233	24338	2	2.47	
	24	71.58	20233	25779	2	2.36	
	22	80.50	20233	28992	2	2.13	
	20	86.06	20233	30994	2	2.02	
	30	59.27	20233	21346	3	3.26	MW1683GH132N4
	26	67.98	20233	24483	3	3.17	
	23	74.92	20233	26982	3	3.10	
	20	88.59	20233	31905	3	2.94	
	17	100.98	20233	36367	3	2.81	
	15	116.11	20233	41816	3	2.65	
	13	132.73	20233	47802	3	2.48	
	11	153.81	20233	55394	3	2.14	
	10	167.58	20233	60353	3	1.97	
	9	186.69	20233	67235	3	1.76	
	9	197.75	20233	71218	3	1.67	
	8	222.39	20233	80092	3	1.48	
	7	237.76	20233	85628	3	1.39	
	0.74	2365.25	20233	118603	5	0.14	MW1685GH132N4
	0.65	2681.15	20233	118603	5	0.12	
	0.57	3071.05	20233	118603	5	0.11	
	0.52	3391.25	20233	118603	5	0.10	
	0.45	3929.85	20233	118603	5	0.08	
	0.38	4577.86	20233	118603	5	0.07	
	0.34	5173.66	20233	118603	5	0.06	
	0.29	6051.15	20233	118603	5	0.05	
	0.26	6716.72	20233	118603	5	0.05	
	0.25	7048.41	20233	118603	5	0.05	MW1685GH132N4
	0.23	7670.23	20233	118603	5	0.04	

(B) - See footnotes page on inside back cover

MSM integral gearmotors

1750 RPM – 60 Hz

Input power (Hp)	Speed (RPM)	Ratio	OHL (LBF) (B)	Output torque (in-lb)	Gear stage	Service factor (SF)	Catalog number
	198	8.85	3611	4781	2	3.03	
	162	10.79	3611	5829	2	2.89	
	138	12.64	3611	6828	2	2.46	
	118	14.86	3611	8028	2	2.09	
	103	17.05	3611	9211	2	1.83	MW882GH160P4
	87	20.12	3611	10869	2	1.55	
	80	21.81	3611	11782	2	1.43	
	72	24.25	3611	13100	2	1.28	
	66	26.34	3611	14229	2	1.18	
	60	29.14	3611	15742	2	1.07	
	184	9.52	5433	5143	2	3.03	
	158	11.08	5433	5986	2	3.03	
	143	12.28	5433	6634	2	3.03	
	120	14.59	5433	7882	2	3.03	
	104	16.83	5433	9092	2	2.90	
	88	19.78	5433	10685	2	2.69	
	83	21.18	5433	11442	2	1.95	
	70	24.89	5433	13446	2	1.78	MW1082GH160P4
	61	28.56	5433	15429	2	1.64	
	52	33.71	5433	18211	2	1.48	
	48	36.54	5433	19739	2	1.41	
	43	40.62	5433	21944	2	1.32	
	40	44.12	5433	23834	2	1.25	
	36	48.81	5433	26368	2	1.14	
	33	52.40	5433	28307	2	1.06	
	36	49.04	5433	26492	3	1.14	MW1083GH160P4
	255	6.86	6777	3706	2	3.03	
	192	9.12	6777	4927	2	3.03	
	166	10.56	6777	5705	2	3.03	
	140	12.47	6777	6736	2	3.03	
	126	13.92	6777	7520	2	3.03	
	108	16.27	6777	8789	2	3.03	
15	94	18.65	6777	10075	2	3.03	
	81	21.57	6777	11652	2	3.03	
	78	22.39	6777	12095	2	3.03	
	73	23.96	6777	12944	2	3.03	MW1282GH160P4
	71	24.77	6777	13381	2	2.89	
	63	27.66	6777	14942	2	3.03	
	54	32.50	6777	17557	2	2.78	
	48	36.83	6777	19896	2	2.54	
	40	43.21	6777	23343	2	2.16	
	37	47.14	6777	25466	2	1.98	
	34	51.43	6777	27783	2	1.82	
	32	55.50	6777	29982	2	1.68	
	28	62.03	6777	33509	2	1.51	
	26	66.44	6777	35892	2	1.41	
	40	43.47	6777	23483	3	2.30	
	35	50.57	6777	27319	3	1.98	
	31	56.05	6777	30279	3	1.78	MW1283GH160P4
	26	66.61	6777	35984	3	1.50	
	23	76.87	6777	41526	3	1.30	
	19	90.32	6777	48792	3	1.11	
	232	7.54	9964	4073	2	3.03	
	178	9.86	9964	5327	2	3.03	
	151	11.61	10832	6272	2	3.03	
	131	13.32	10832	7196	2	3.03	
	119	14.68	10832	7930	2	3.03	
	101	17.35	10832	9373	2	3.03	MW1482GH160P4
	88	19.78	11478	10685	2	3.03	
	77	22.74	11478	12284	2	3.03	
	67	26.00	11478	14046	2	3.00	
	66	26.51	11478	14321	2	3.03	
	58	30.39	11478	16417	2	3.03	
	50	35.14	11478	18983	2	3.03	

(B) - See footnotes page on inside back cover

MSM integral gearmotors

1750 RPM – 60 Hz

Input power (Hp)	Speed (RPM)	Ratio	OHL (LBF) (B)	Output torque (in-lb)	Gear stage	Service factor (SF)	Catalog number
15 (cont.)	48	36.47	11478	19702	2	3.03	MW1482GH160P4
	43	40.36	11478	21803	2	2.89	
	37	47.23	11478	25514	2	2.56	
	34	51.15	11478	27632	2	2.41	
	31	57.09	11478	30841	2	2.21	
	29	60.53	11478	32699	2	2.10	
	26	68.61	11478	37064	2	1.89	
	24	73.42	11478	39663	2	1.79	
	60	29.33	11478	15844	3	3.03	MW1483GH160P4
	45	39.02	11478	21079	3	3.03	
	39	45.18	11478	24407	3	3.03	
	33	53.34	11478	28815	3	2.67	
	29	59.55	11478	32170	3	2.39	
	25	69.59	11478	37594	3	2.05	
	22	79.78	11478	43098	3	1.79	
	19	92.24	11478	49829	3	1.55	
	18	95.74	11478	51720	3	1.49	
	17	105.94	11478	57230	3	1.35	
	14	123.98	11478	66976	3	1.15	
	13	134.28	11478	72540	3	1.06	
	180	9.71	15239	5245	2	3.03	MW1682GH160P4
	140	12.47	16653	6736	2	3.03	
	121	14.51	16653	7839	2	3.03	
	106	16.53	16653	8930	2	3.03	
	97	18.13	17897	9794	2	3.03	
	80	21.85	17897	11804	2	3.03	
	72	24.28	17897	13116	2	3.03	
	64	27.50	17897	14856	2	3.03	
	55	32.07	19910	17325	2	3.03	
	48	36.55	19910	19745	2	3.03	MW1682GH160P4
	42	42.03	19910	22705	2	3.03	
	36	48.04	20233	25952	2	2.91	
	31	55.68	20233	30079	2	2.60	
	29	60.66	20233	32769	2	2.43	
	26	67.58	20233	36508	2	2.22	
	24	71.58	20233	38669	2	2.12	
	22	80.50	20233	43487	2	1.92	
	20	86.06	20233	46491	2	1.81	
	45	38.51	20233	20804	3	3.03	MW1683GH160P4
	35	50.32	20233	27184	3	3.03	
	30	59.27	20233	32019	3	3.03	
	26	67.98	20233	36724	3	3.03	
	23	74.92	20233	40473	3	2.93	
	20	88.59	20233	47858	3	2.48	
	17	100.98	20233	54551	3	2.17	
	15	116.11	20233	62724	3	1.89	
	13	132.73	20233	71703	3	1.65	
	11	153.81	20233	83090	3	1.43	
	10	167.58	20233	90529	3	1.31	
	9	186.69	20233	100853	3	1.18	
	9	197.75	20233	106827	3	1.11	

(B) - See footnotes page on inside back cover

MSM integral gearmotors

1750 RPM – 60 Hz

Input power (Hp)	Speed (RPM)	Ratio	OHL (LBF) (B)	Output torque (in-lb)	Gear stage	Service factor (SF)	Catalog number
20	198	8.85	3611	6375	2	2.27	MW882GH160Q4
	162	10.79	3611	7772	2	2.16	
	138	12.64	3611	9104	2	1.85	
	118	14.86	3611	10703	2	1.57	
	103	17.05	3611	12281	2	1.37	
	87	20.12	3611	14492	2	1.16	
	80	21.81	3611	15709	2	1.07	
	184	9.52	5433	6857	2	2.27	MW1082GH160Q4
	158	11.08	5433	7981	2	2.27	
	143	12.28	5433	8845	2	2.27	
	120	14.59	5433	10509	2	2.27	
	104	16.83	5433	12122	2	2.18	
	88	19.78	5433	14247	2	2.02	
	83	21.18	5433	15256	2	1.46	
	70	24.89	5433	17928	2	1.33	
	61	28.56	5433	20571	2	1.23	MW1082GH160Q4
	52	33.71	5433	24281	2	1.11	
	48	36.54	5433	26319	2	1.06	
	255	6.86	6777	4941	2	2.27	MW1282GH160Q4
	192	9.12	6777	6569	2	2.27	
	166	10.56	6777	7606	2	2.27	
	140	12.47	6777	8982	2	2.27	
	126	13.92	6777	10026	2	2.27	
	108	16.27	6777	11719	2	2.27	
	94	18.65	6777	13433	2	2.27	
	81	21.57	6777	15537	2	2.27	
	78	22.39	6777	16127	2	2.27	
	73	23.96	6777	17258	2	2.27	
	71	24.77	6777	17841	2	2.17	
	63	27.66	6777	19923	2	2.27	
	54	32.50	6777	23409	2	2.08	
	48	36.83	6777	26528	2	1.90	
	40	43.21	6777	31124	2	1.62	
	37	47.14	6777	33954	2	1.49	
	34	51.43	6777	37044	2	1.36	
	32	55.50	6777	39976	2	1.26	
	28	62.03	6777	44679	2	1.13	
	26	66.44	6777	47856	2	1.05	
	40	43.47	6777	31311	3	1.72	MW1283GH160Q4
	35	50.57	6777	36425	3	1.48	
	31	56.05	6777	40372	3	1.34	
	26	66.61	6777	47978	3	1.13	
	232	7.54	9964	5431	2	2.27	MW1482GH160Q4
	178	9.86	9964	7102	2	2.27	
	151	11.61	10832	8363	2	2.27	
	131	13.32	10832	9594	2	2.27	
	119	14.68	10832	10574	2	2.27	
	101	17.35	10832	12497	2	2.27	
	88	19.78	11478	14247	2	2.27	
	77	22.74	11478	16379	2	2.27	
	67	26.00	11478	18727	2	2.25	
	66	26.51	11478	19095	2	2.27	
	58	30.39	11478	21889	2	2.27	
	50	35.14	11478	25311	2	2.27	
	48	36.47	11478	26269	2	2.27	
	43	40.36	11478	29071	2	2.17	
	37	47.23	11478	34019	2	1.92	
	34	51.15	11478	36843	2	1.81	
	31	57.09	11478	41121	2	1.65	
	29	60.53	11478	43599	2	1.58	
	26	68.61	11478	49419	2	1.42	
	24	73.42	11478	52883	2	1.34	

(B) - See footnotes page on inside back cover

MSM integral gearmotors

1750 RPM – 60 Hz

Input power (Hp)	Speed (RPM)	Ratio	OHL (LBF) (B)	Output torque (in-lb)	Gear stage	Service factor (SF)	Catalog number
20 (cont.)	60	29.33	11478	21126	3	2.27	MW1483GH160Q4
	45	39.02	11478	28106	3	2.27	
	39	45.18	11478	32543	3	2.27	
	33	53.34	11478	38420	3	2.00	
	29	59.55	11478	42893	3	1.80	
	25	69.59	11478	50125	3	1.54	
	22	79.78	11478	57464	3	1.34	
	19	92.24	11478	66439	3	1.16	
	18	95.74	11478	68960	3	1.12	
	17	105.94	11478	76307	3	1.01	
	180	9.71	15239	6994	2	2.27	MW1682GH160Q4
	140	12.47	16653	8982	2	2.27	
	121	14.51	16653	10451	2	2.27	
	106	16.53	16653	11906	2	2.27	
	97	18.13	17897	13059	2	2.27	
	80	21.85	17897	15738	2	2.27	
	72	24.28	17897	17489	2	2.27	
	64	27.50	17897	19808	2	2.27	
	55	32.07	19910	23100	2	2.27	
	48	36.55	19910	26326	2	2.27	
	42	42.03	19910	30274	2	2.27	
	36	48.04	20233	34603	2	2.19	
	31	55.68	20233	40106	2	1.95	MW1682GH160Q4
	29	60.66	20233	43693	2	1.82	
	26	67.58	20233	48677	2	1.67	
	24	71.58	20233	51558	2	1.59	
	22	80.50	20233	57983	2	1.44	
	20	86.06	20233	61988	2	1.36	
	45	38.51	20233	27738	3	2.27	MW1683GH160Q4
	35	50.32	20233	36245	3	2.27	
	30	59.27	20233	42691	3	2.27	
	26	67.98	20233	48965	3	2.27	
	23	74.92	20233	53964	3	2.20	
	20	88.59	20233	63810	3	1.86	
	17	100.98	20233	72734	3	1.63	
	15	116.11	20233	83632	3	1.42	
	13	132.73	20233	95604	3	1.24	
	11	153.81	20233	110787	3	1.07	
25	184	9.52	5433	8571	2	2.97	MW1082GH180R4
	158	11.08	5433	9976	2	2.64	
	143	12.28	5433	11056	2	2.43	
	120	14.59	5433	13136	2	2.12	
	104	16.83	5433	15153	2	1.88	
	88	19.78	5433	17809	2	1.65	
	83	21.18	5433	19070	2	1.17	
	70	24.89	5433	22410	2	1.07	
	255	6.86	6777	6176	2	3.70	MW1282GH180R4
	192	9.12	6777	8211	2	3.71	
	166	10.56	6777	9508	2	3.71	
	140	12.47	6777	11227	2	3.70	
	126	13.92	6777	12533	2	3.59	
	108	16.27	6777	14649	2	3.16	
	94	18.65	6777	16792	2	2.82	
	81	21.57	6777	19421	2	2.49	
	78	22.39	6777	20159	2	2.41	
	73	23.96	6777	21573	2	2.08	
	71	24.77	6777	22302	2	2.21	
	63	27.66	6777	24904	2	1.87	
	54	32.50	6777	29262	2	1.67	
	48	36.83	6777	33160	2	1.52	
	40	43.21	6777	38904	2	1.30	
	37	47.14	6777	42443	2	1.19	
	34	51.43	6777	46305	2	1.09	
	32	55.50	6777	49970	2	1.01	

(B) - See footnotes page on inside back cover

MSM integral gearmotors

1750 RPM – 60 Hz

Input power (Hp)	Speed (RPM)	Ratio	OHL (LBF) (B)	Output torque (in-lb)	Gear stage	Service factor (SF)	Catalog number
25 (cont.)	40	43.47	6777	39139	3	1.38	MW1283GH180R4
	35	50.57	6777	45531	3	1.19	
	31	56.05	6777	50465	3	1.07	
	232	7.54	9964	6789	2	3.71	MW1482GH180R4
	178	9.86	9964	8878	2	3.70	
	151	11.61	10832	10453	2	3.70	
	131	13.32	10832	11993	2	3.70	
	119	14.68	10832	13217	2	3.70	
	101	17.35	10832	15621	2	3.65	
	88	19.78	11478	17809	2	3.26	
	77	22.74	11478	20474	2	2.89	
	67	26.00	11478	23409	2	2.57	
	66	26.51	11478	23868	2	2.97	
	58	30.39	11478	27362	2	2.59	
	50	35.14	11478	31639	2	2.24	
	48	36.47	11478	32836	2	2.16	
	43	40.36	11478	36338	2	1.95	
	37	47.23	11478	42524	2	1.67	
	34	51.15	11478	46053	2	1.54	
	31	57.09	11478	51401	2	1.38	
	29	60.53	11478	54499	2	1.30	
	60	29.33	11478	26407	3	2.65	MW1483GH180R4
	45	39.02	11478	35132	3	2.19	
	39	45.18	11478	40678	3	1.89	
	33	53.34	11478	48025	3	1.60	
	29	59.55	11478	53616	3	1.44	
	25	69.59	11478	62656	3	1.23	
	22	79.78	11478	71830	3	1.07	
	227	7.71	15239	6942	2	3.71	MW1682GH180R4
	180	9.71	15239	8742	2	3.70	
	140	12.47	16653	11227	2	3.70	
	121	14.51	16653	13064	2	3.70	
	106	16.53	16653	14883	2	3.71	
	97	18.13	17897	16323	2	3.70	
	80	21.85	17897	19673	2	3.59	
	72	24.28	17897	21861	2	3.32	
	64	27.50	17897	24760	2	3.01	
	55	31.83	19910	28658	2	2.69	
	55	32.07	19910	28874	2	3.70	
	48	36.55	19910	32908	2	3.34	
	42	42.03	19910	37842	2	2.90	
	36	48.04	20233	43253	2	2.54	
	31	55.68	20233	50132	2	2.19	
	29	60.66	20233	54616	2	2.01	
	26	67.58	20233	60846	2	1.80	
	24	71.58	20233	64448	2	1.70	
	45	38.51	20233	34673	3	3.42	MW1683GH180R4
	35	50.32	20233	45306	3	2.62	
	30	59.27	20233	53364	3	2.22	
	26	67.98	20233	61206	3	1.94	
	23	74.92	20233	67455	3	1.76	
	20	88.59	20233	79763	3	1.49	
	17	100.98	20233	90918	3	1.30	
	15	116.11	20233	104540	3	1.13	

(B) - See footnotes page on inside back cover

MSM integral gearmotors

1750 RPM – 60 Hz

Input power (Hp)	Speed (RPM)	Ratio	OHL (LBF) (B)	Output torque (in-lb)	Gear stage	Service factor (SF)	Catalog number
	184	9.52	5433	10286	2	2.47	
	158	11.08	5433	11971	2	2.20	
	143	12.28	5433	13268	2	2.03	MW1082GH180S4
	120	14.59	5433	15763	2	1.77	
	104	16.83	5433	18184	2	1.57	
	88	19.78	5433	21371	2	1.37	
	255	6.86	6777	7412	2	3.09	
	192	9.12	6777	9854	2	3.09	
	166	10.56	6777	11409	2	3.09	
	140	12.47	6777	13473	2	3.09	
	126	13.92	6777	15040	2	2.99	
	108	16.27	6777	17579	2	2.63	
	94	18.65	6777	20150	2	2.35	
	81	21.57	6777	23305	2	2.07	MW1282GH180S4
	78	22.39	6777	24191	2	2.01	
	73	23.96	6777	25887	2	1.73	
	71	24.77	6777	26762	2	1.84	
	63	27.66	6777	29885	2	1.56	
	54	32.50	6777	35114	2	1.39	
	48	36.83	6777	39792	2	1.27	
	40	43.21	6777	46685	2	1.08	
	40	43.47	6777	46966	3	1.15	MW1283GH180S4
	232	7.54	9964	8146	2	3.09	
	178	9.86	9964	10653	2	3.09	
	151	11.61	10832	12544	2	3.09	
	131	13.32	10832	14391	2	3.09	
	119	14.68	10832	15861	2	3.09	
	101	17.35	10832	18745	2	3.04	
	88	19.78	11478	21371	2	2.72	
	77	22.74	11478	24569	2	2.41	
	67	26.00	11478	28091	2	2.14	MW1482GH180S4
30	66	26.51	11478	28642	2	2.47	
	58	30.39	11478	32834	2	2.16	
	50	35.14	11478	37966	2	1.87	
	48	36.47	11478	39403	2	1.80	
	43	40.36	11478	43606	2	1.62	
	37	47.23	11478	51029	2	1.39	
	34	51.15	11478	55264	2	1.28	
	31	57.09	11478	61682	2	1.15	
	29	60.53	11478	65398	2	1.08	
	60	29.33	11478	31689	3	2.21	
	45	39.02	11478	42158	3	1.83	MW1483GH180S4
	39	45.18	11478	48814	3	1.58	
	33	53.34	11478	57630	3	1.34	
	29	59.55	11478	64340	3	1.20	MW1483GH180S4
	25	69.59	11478	75187	3	1.02	
	227	7.71	15239	8330	2	3.09	
	180	9.71	15239	10491	2	3.09	
	140	12.47	16653	13473	2	3.09	
	121	14.51	16653	15677	2	3.09	
	106	16.53	16653	17859	2	3.09	
	97	18.13	17897	19588	2	3.09	
	80	21.85	17897	23607	2	2.99	
	72	24.28	17897	26233	2	2.76	
	64	27.50	17897	29712	2	2.51	MW1682GH180S4
	55	31.83	19910	34390	2	2.24	
	55	32.07	19910	34649	2	3.09	
	48	36.55	19910	39490	2	2.78	
	42	42.03	19910	45410	2	2.42	
	36	48.04	20233	51904	2	2.11	
	31	55.68	20233	60158	2	1.82	
	29	60.66	20233	65539	2	1.67	
	26	67.58	20233	73015	2	1.50	
	24	71.58	20233	77337	2	1.42	

(B) - See footnotes page on inside back cover

MSM integral gearmotors

1750 RPM – 60 Hz

Input power (Hp)	Speed (RPM)	Ratio	OHL (LBF) (B)	Output torque (in-lb)	Gear stage	Service factor (SF)	Catalog number
30 (cont.)	45	38.51	20233	41607	3	2.85	MW1683GH180S4
	35	50.32	20233	54367	3	2.18	
	30	59.27	20233	64037	3	1.85	
	26	67.98	20233	73448	3	1.61	
	23	74.92	20233	80946	3	1.47	
	20	88.59	20233	95715	3	1.24	
	17	100.98	20233	109102	3	1.09	
40	255	6.86	6777	9882	2	3.33	MW1282GH200T4
	192	9.12	6777	13138	2	2.90	
	166	10.56	6777	15212	2	2.69	
	140	12.47	6777	17964	2	2.45	
	126	13.92	6777	20053	2	2.24	
	108	16.27	6777	23438	2	1.97	
	94	18.65	6777	26867	2	1.76	
	81	21.57	6777	31073	2	1.55	
	78	22.39	6777	32254	2	1.51	
	73	23.96	6777	34516	2	1.30	
	71	24.77	6777	35683	2	1.38	
	63	27.66	6777	39846	2	1.17	
	54	32.50	6777	46819	2	1.04	
	232	7.54	9964	10862	2	3.44	MW1482GH200T4
	178	9.86	9964	14204	2	3.19	
	151	11.61	10832	16725	2	2.90	
	131	13.32	10832	19188	2	2.67	
	119	14.68	10832	21148	2	2.50	
	101	17.35	10832	24994	2	2.23	
	88	19.78	11478	28495	2	2.03	
	77	22.74	11478	32759	2	1.81	
	67	26.00	11478	37455	2	1.61	
	66	26.51	11478	38190	2	1.85	
	58	30.39	11478	43779	2	1.62	
	50	35.14	11478	50622	2	1.40	
	48	36.47	11478	52538	2	1.35	
	43	40.36	11478	58141	2	1.22	
	37	47.23	11478	68038	2	1.04	
	60	29.33	11478	42252	3	1.66	MW1483GH200T4
	45	39.02	11478	56211	3	1.37	
	39	45.18	11478	65085	3	1.18	
	33	53.34	11478	76840	3	1.00	
	227	7.71	15239	11107	2	3.42	MW1682GH200T4
	180	9.71	15239	13988	2	3.36	
	140	12.47	16653	17964	2	3.13	
	121	14.51	16653	20903	2	2.85	
	106	16.53	16653	23813	2	2.62	
	97	18.13	17897	26118	2	2.46	
	80	21.85	17897	31476	2	2.15	
	72	24.28	17897	34977	2	1.99	
	64	27.50	17897	39616	2	1.81	
	55	31.83	19910	45853	2	1.61	
	55	32.07	19910	46199	2	2.23	MW1682GH200T4
	48	36.55	19910	52653	2	2.03	
	42	42.03	19910	60547	2	1.81	
	36	48.04	20233	69205	2	1.59	
	31	55.68	20233	80211	2	1.37	
	29	60.66	20233	87385	2	1.26	
	45	38.51	20233	55476	3	2.14	MW1683GH200T4
	35	50.32	20233	72490	3	1.64	
	30	59.27	20233	85383	3	1.39	
	26	67.98	20233	97930	3	1.21	
	23	74.92	20233	107928	3	1.10	

(B) - See footnotes page on inside back cover

Notes

MSM Dimensions Outline

Solid shaft

C-face

Double and triple reduction

MSM-139	Output shaft dimensions
MSM-140	Gearcase dimensions
MSM-141	Clamp collar (NEMA/IEC)
MSM-142	3 pc coupled (NEMA/IEC)

4 & 5 Stage

MSM-143	Output shaft dimensions
MSM-144	Gearcase dimensions
MSM-145	Clamp collar (NEMA/IEC)
MSM-146	3 pc coupled (NEMA/IEC)

Separate

Double and triple reduction

MSM-147	Output shaft dimensions
MSM-144	Gearcase dimensions
MSM-149	Input shaft dimensions

4 & 5 Stage

MSM-151	Output shaft dimensions
MSM-152	Gearcase dimensions
MSM-153	Input shaft dimensions

Integral

Double and triple reduction

MSM-155	Output shaft dimensions
MSM-156	Gearcase dimensions
MSM-157	Standard motor dimensions
MSM-158	Washdown motor dimensions

4 & 5 Stage

MSM-159	Output shaft dimensions
MSM-160	Gearcase dimensions
MSM-161	Standard motor dimensions
MSM-162	Washdown motor dimensions

MSM Dimensions Outline

Straight hollow bore

C-face

Double and triple reduction

MSM-163	Output shaft dimensions
MSM-164	Gearcase dimensions
MSM-165	Clamp collar (NEMA/IEC)
MSM-166	3 pc coupled (NEMA/IEC)

4 & 5 Stage

MSM-167	Output shaft dimensions
MSM-168	Gearcase dimensions
MSM-169	Clamp collar (NEMA/IEC)
MSM-170	3 pc coupled (NEMA/IEC)

Separate

Double and triple reduction

MSM-171	Output shaft dimensions
MSM-172	Gearcase dimensions
MSM-173	Input shaft dimensions

4 & 5 Stage

MSM-175	Output shaft dimensions
MSM-176	Gearcase dimensions
MSM-177	Input shaft dimensions

Integral

Double and triple reduction

MSM-179	Output shaft dimensions
MSM-180	Gearcase dimensions
MSM-181	Standard motor dimensions
MSM-182	Washdown motor dimensions

4 & 5 Stage

MSM-183	Output shaft dimensions
MSM-184	Gearcase dimensions
MSM-185	Standard motor dimensions
MSM-186	Washdown motor dimensions

Dimensions

Output shaft dimensions

C-face – universal mount – solid shaft

Double and triple reduction

MW_2C_
MW_2L_
MW_3C_
MW_3L

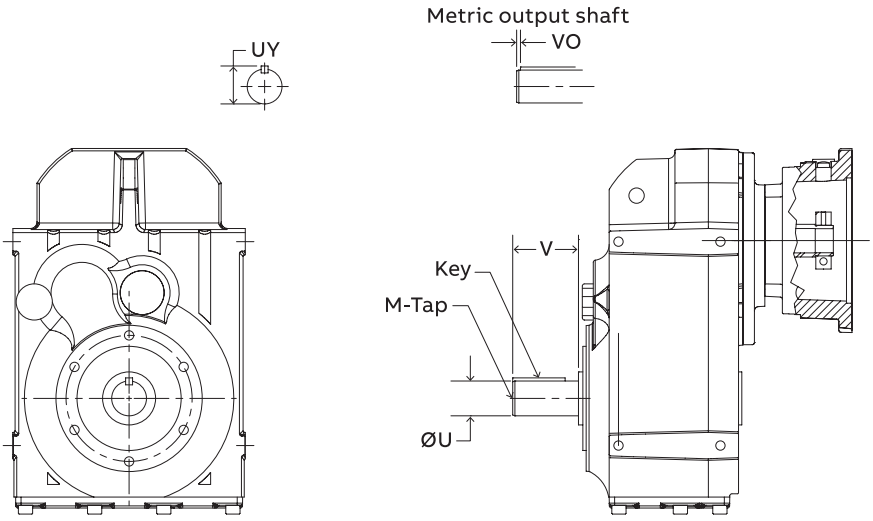

B14 Output flange

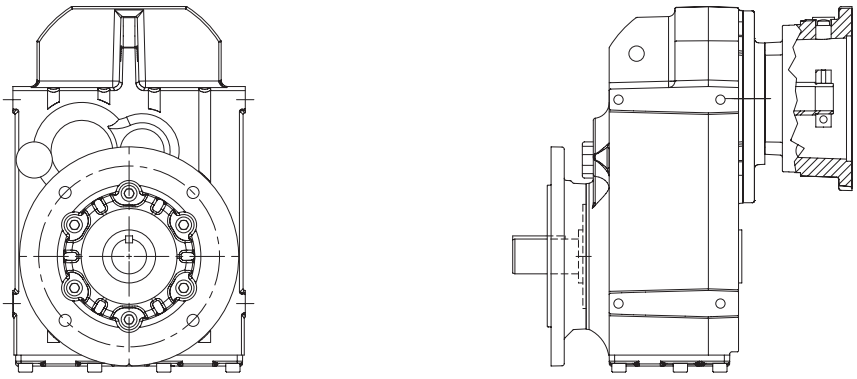

B5 Output flange

	Standard inch output shaft						Standard metric output shaft						
	Ø U	Tol.	UY	V	Key	M–Tap	Ø U	Tol.	UY	V	VO	Key	M–Tap
38	1.000	+0.0000 –0.0005	1.11	1.97	1/4 x 1/4 x 1–5/8	3/8–16 UNC X 0.87	25	+0.015 +0.002	28	50	5	8 x 7 x 40	M10 x 22
48	1.250	+0.0000 –0.0005	1.37	2.36	1/4 x 1/4 x 1–7/8	3/8–16 UNC X 0.87	30	+0.015 +0.002	33	60	4	8 x 7 x 50	M10 x 22
58	1.375	+0.0000 -0.0005	1.49	2.76	5/16 x 5/16 x 2–1/8	1/2–13 UNC X 1.12	35	+0.014 +0.002	38	70	7	10 x 8 x 56	M12 x 28
68	1.625	+0.0000 –0.0010	1.80	3.15	3/8 x 3/8 x 2–5/8	5/8–11 UNC X 1.42	40	+0.018 +0.002	43	80	5	12 x 8 x 70	M16 x 36
88	2.000	+0.0000 –0.0010	2.22	3.94	1/2 x 1/2 x 3–1/4	3/4–10 UNC X 1.65	50	+0.030 +0.011	54	100	10	14 x 9 x 80	M16 x 36
108	2.375	+0.0000 –0.0010	2.65	4.72	5/8 x 5/8 x 3–11/16	3/4–10 UNC X 1.65	60	+0.030 +0.011	64	120	5	18 x 11 x 100	M20 x 42
128	2.875	+0.0000 –0.0010	3.21	5.51	3/4 x 3/4 x 4	3/4–10 UNC X 1.65	70	+0.035 +0.013	75	140	8	20 x 12 x 125	M20 x 42
148	3.625	+0.0000 –0.0010	4.01	6.69	7/8 x 7/8 x 5–1/4	1–8 UNC X 1.97	90	+0.035 +0.013	95	170	15	25 x 14 x 140	M24 x 50
168	4.375	+0.0000 –0.0010	4.82	8.27	1 x 1 x 6–5/8	1–8 UNC X 1.97	110	+0.035 +0.013	116	210	15	28 x 16 x 180	M24 x 50

See page MSM–169 for additional output shaft sizes

Gearcase dimensions

C-face – universal mount – solid shaft

Double and triple reduction

MW_2C_
MW_2L_
MW_3C_
MW_3L_

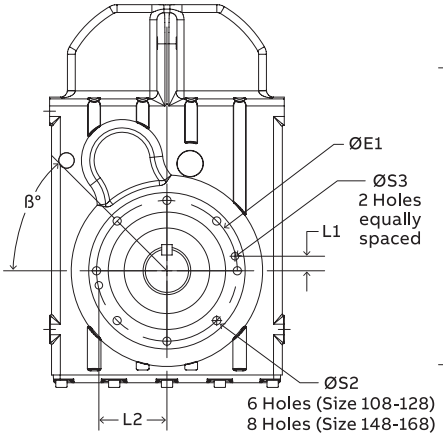

B14 Output flange
Sizes 108-168

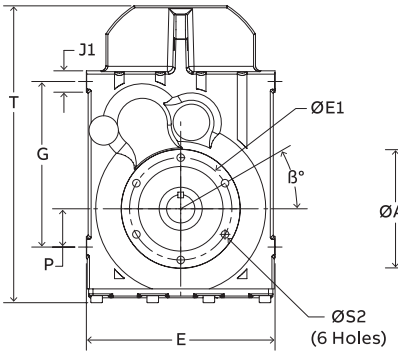

B14 Output flange
Sizes 38-88

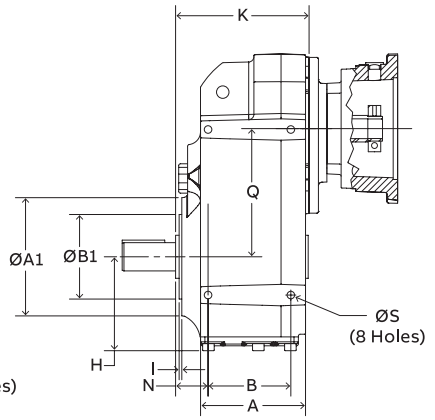

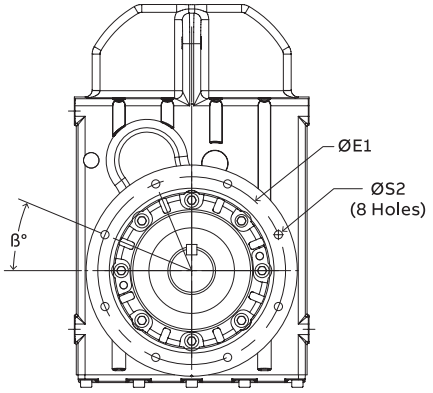

B5 Output flange
Sizes 128-168

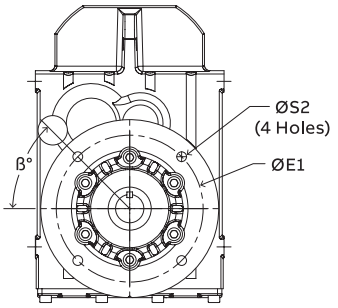

B5 Output flange
Sizes 38-108

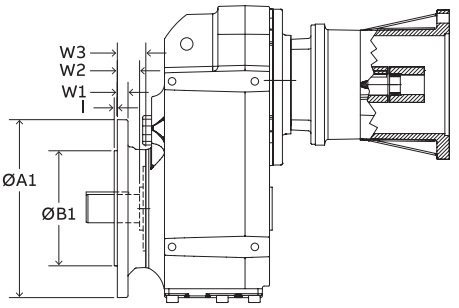

	Mounting dimensions					Outline dimensions						
	B	G	H	P	Ø S	A	K	E	N	Q	T	J1
38	3.03	5.83	3.77	1.22	M8 x 0.43"	3.96	5.14	7.09	0.97	4.80	11.17	0.91
48	3.66	7.32	4.30	1.69	M10 x 0.52"	4.64	5.91	8.35	1.44	5.91	13.28	0.95
58	4.02	8.15	4.67	2.13	M12 x 0.67"	5.30	6.61	9.40	1.70	6.34	14.73	1.14
68	4.41	9.06	5.16	2.36	M12 x 0.67"	5.87	6.71	10.39	1.36	7.01	16.30	1.02
88	5.51	11.22	6.62	2.76	M16 x 0.87"	7.18	8.45	13.39	1.48	8.66	20.39	1.38
108	6.50	13.78	7.33	3.94	M16 x 0.87"	8.09	9.74	14.96	1.79	10.39	23.90	1.58
128	8.07	16.34	8.80	4.72	M20 x 1.06"	10.45	11.7	17.72	2.46	12.46	28.47	1.97
148	8.66	18.31	10.08	4.92	M24 x 1.26"	12.11	13.74	19.69	2.74	13.98	32.41	2.36
168	10.63	21.06	11.41	5.59	M30 x 1.58"	14.25	15.71	23.62	3.13	16.22	36.68	2.85

	B14 mounting dimensions									B5 mounting dimensions								
	Ø A1	Ø B1	Ø E1	Ø S2	I	Ø S3	L1	L2	ß	Ø A1	Ø B1	Ø E1	Ø S2	I	W1	W2	W3	ß
38	4.75	3.149	3.94	M8 x 0.63"	0.12	–	–	–	30˚	6.30	4.331	5.12	0.35	0.14	0.39	0.95	1.18	30˚
48	5.20	3.470	4.53	M10 x 0.67"	0.12	–	–	–	30˚	7.87	5.118	6.50	0.43	0.14	0.47	0.98	1.26	30˚
58	5.91	4.3308	5.12	M12 x 0.83"	0.16	–	–	–	30˚	9.84	7.0867	8.47	0.53	0.16	0.59	0.91	1.20	45˚
68	6.27	4.33	5.12	M12 x 0.83"	0.14	–	–	–	30˚	9.84	7.086	8.47	0.53	0.16	0.59	0.91	1.20	30˚
88	7.48	5.118	6.50	M12 x 0.83"	0.14	–	–	–	30˚	11.81	9.055	10.43	0.53	0.16	0.63	1.46	1.79	45˚
108	9.65	7.087	8.47	M16 x 1.10"	0.16	0.47	1.10	4.06	30˚	13.78	9.842	11.81	0.69	0.20	0.71	1.42	1.77	45˚
128	11.69	9.055	10.43	M16 x 1.10"	0.16	0.47	1.69	4.92	30˚	17.71	13.779	15.75	0.69	0.20	0.87	1.63	1.99	22.5˚
148	13.15	9.842	11.81	M20 x 1.34"	0.20	0.63	1.22	5.71	45˚	17.72	13.779	15.75	0.69	0.20	0.87	1.61	2.05	22.5˚
168	16.02	11.810	13.78	M20 x 1.34"	0.20	0.63	1.46	6.73	45˚	21.65	17.716	19.69	0.69	0.20	0.98	2.01	2.44	22.5˚

Clamp collar – NEMA/IEC dimensions

C-face – universal mount – solid shaft

Double and triple reduction

MW_2CN_
MW_3CN_
MW_2CI_
MW_3CI_

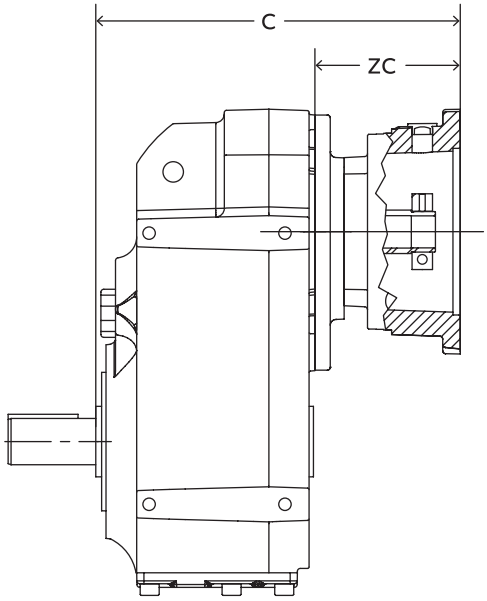

NEMA clamp collar motor dimensions

Reducer size	Reducer stage	56C		140TC		180TC		210TC		250TC		280TC		320TC		360TC	
		C	ZC	C	ZC	C	ZC	C	ZC	C	ZC	C	ZC	C	ZC	C	ZC
38	2	8.60	3.46	9.27	4.13	9.59	4.45	–	–	–	–	–	–	–	–	–	–
	3	9.19	4.06	9.86	4.72	–	–	–	–	–	–	–	–	–	–	–	–
48	2	9.15	3.25	9.82	3.92	11.40	5.49	11.28	5.33	–	–	–	–	–	–	–	–
	3	9.82	3.92	10.49	4.59	12.07	6.16	–	–	–	–	–	–	–	–	–	–
58	2	9.52	2.91	10.19	3.58	11.41	4.80	13.71	7.10	–	–	–	–	–	–	–	–
	3	10.27	3.66	10.94	4.33	12.18	5.57	–	–	–	–	–	–	–	–	–	–
68	2	9.72	3.01	10.39	3.68	11.89	5.18	13.78	7.07	12.88	6.13	–	–	–	–	–	–
	3	10.45	3.74	11.12	4.41	12.69	5.98	–	–	–	–	–	–	–	–	–	–
88	2	–	–	11.54	3.09	12.90	4.45	14.79	6.34	14.73	6.28	15.33	6.88	–	–	–	–
	3	11.86	3.41	12.52	4.08	14.04	5.59	15.89	7.44	–	–	–	–	–	–	–	–
108	2	–	–	12.38	2.64	13.74	4.00	15.59	5.85	15.56	5.82	16.36	6.62	17.79	8.01	–	–
	3	–	–	13.58	3.84	14.98	5.24	16.87	7.13	16.72	6.98	–	–	–	–	–	–
128	2	–	–	–	–	15.35	3.58	16.98	5.21	16.93	5.16	17.86	6.09	19.49	7.72	21.18	9.41
	3	–	–	15.33	3.56	16.69	4.82	18.32	6.55	18.39	6.62	19.32	7.54	–	–	–	–
148	2	–	–	–	–	–	–	18.64	4.90	18.61	4.87	19.53	5.79	21.14	7.40	22.65	8.91
	3	–	–	–	–	18.54	4.80	20.13	6.39	20.10	6.36	20.03	7.29	22.66	8.92	–	–
168	2	–	–	–	–	–	–	20.04	4.33	20.00	4.30	20.93	5.22	22.56	6.85	24.05	8.34
	3	–	–	–	–	–	–	21.65	5.94	21.71	6.00	22.54	6.84	24.17	8.47	25.67	9.96

IEC clamp collar motor dimensions

Reducer size	Reducer stage	71D		80D		90D		100D		112D		132D		160D		180D		200D	
		C	ZC	C	ZC	C	ZC	C	ZC	C	ZC	C	ZC	C	ZC	C	ZC	C	ZC
38	2	7.89	2.76	8.84	3.70	8.84	3.70	9.13	4.00	–	–	–	–	–	–	–	–	–	–
	3	8.48	3.35	9.43	4.29	9.43	4.29	–	–	–	–	–	–	–	–	–	–	–	–
48	2	8.44	2.54	9.39	3.48	9.39	3.48	9.69	3.78	10.02	4.11	–	–	–	–	–	–	–	–
	3	9.11	3.21	10.06	4.15	10.06	4.15	10.35	4.45	–	–	–	–	–	–	–	–	–	–
58	2	8.81	2.20	9.76	3.15	9.76	3.15	10.05	3.44	10.25	3.64	12.06	5.45	–	–	–	–	–	–
	3	9.56	2.95	10.51	3.90	10.51	3.90	10.8	4.19	11.02	4.41	–	–	–	–	–	–	–	–
68	2	9.02	2.30	9.96	3.25	9.96	3.25	10.26	3.54	10.51	3.80	12.13	5.41	–	–	–	–	–	–
	3	9.74	3.03	10.69	3.98	10.69	3.98	10.98	4.27	–	–	–	–	–	–	–	–	–	–
88	2	–	–	–	–	11.11	2.66	11.30	2.85	11.52	3.07	13.14	4.69	14.83	6.38	–	–	–	–
	3	11.15	2.70	12.09	3.64	12.09	3.64	12.39	3.94	12.66	4.21	14.24	5.79	–	–	–	–	–	–
108	2	–	–	–	–	11.95	2.20	12.13	2.38	12.36	2.62	13.94	4.19	15.67	5.93	16.20	6.46	16.95	6.85
	3	–	–	13.15	3.41	13.15	3.41	13.44	3.70	13.60	3.86	15.22	5.47	16.83	7.09	–	–	–	–
128	2	–	–	–	–	–	–	13.78	2.01	13.98	2.21	15.55	3.78	17.05	5.28	17.70	5.93	18.09	6.32
	3	–	–	–	–	14.90	3.13	15.20	3.43	15.31	3.54	16.89	5.12	18.50	6.73	19.15	7.38	19.55	7.78
148	2	–	–	–	–	–	–	–	–	–	–	17.20	3.46	18.72	4.98	19.37	5.63	19.76	6.02
	3	–	–	–	–	–	–	16.97	3.23	17.17	3.43	18.70	4.96	20.22	6.48	20.87	7.13	21.26	7.52
168	2	–	–	–	–	–	–	–	–	–	–	18.60	2.89	20.12	4.41	20.77	5.06	21.16	5.45
	3	–	–	–	–	–	–	–	–	–	–	20.22	4.51	21.73	6.02	22.38	6.67	22.78	7.07

Three-piece coupled – NEMA/IEC dimensions

C-face – universal mount – solid shaft

Double and triple reduction

MW_2LN_
MW_3LN_
MW_2LI_
MW_3LI_

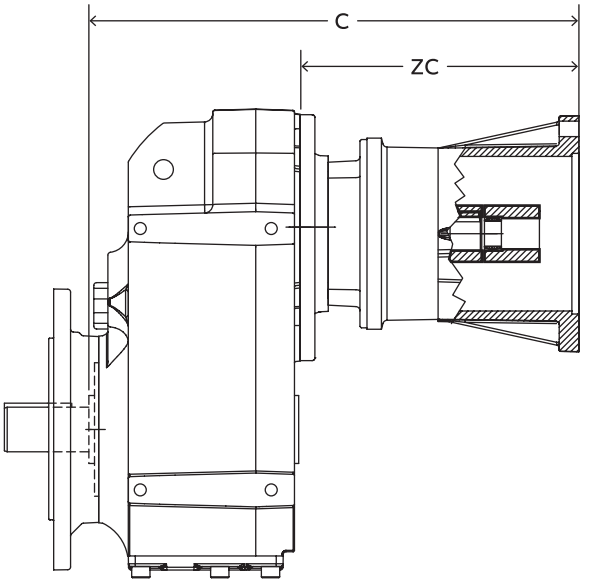

NEMA Three-piece coupled motor dimensions

Reducer size	Reducer stage	56C		140TC		180TC		210TC		250TC		280TC		320TC		360TC	
		C	ZC	C	ZC	C	ZC	C	ZC	C	ZC	C	ZC	C	ZC	C	ZC
38	2	11.73	6.59	13.15	8.01	14.43	9.29	–	–	–	–	–	–	–	–	–	–
	3	12.32	7.19	13.74	8.60	–	–	–	–	–	–	–	–	–	–	–	–
48	2	12.28	6.38	13.70	7.80	14.99	9.08	–	–	–	–	–	–	–	–	–	–
	3	12.95	7.05	14.37	8.46	16.65	9.74	–	–	–	–	–	–	–	–	–	–
58	2	13.11	6.50	14.07	7.46	15.21	8.60	17.55	10.94	–	–	–	–	–	–	–	–
	3	13.40	6.97	14.82	8.21	15.98	9.37	–	–	–	–	–	–	–	–	–	–
68	2	12.85	6.14	14.27	7.56	15.47	8.76	17.40	10.69	–	–	–	–	–	–	–	–
	3	13.58	6.87	15.00	8.29	16.28	9.57	–	–	–	–	–	–	–	–	–	–
88	2	–	–	15.42	6.97	16.48	8.03	18.41	9.96	20.38	11.93	–	–	–	–	–	–
	3	14.99	6.54	16.40	7.95	17.62	9.17	19.51	11.06	–	–	–	–	–	–	–	–
108	2	–	–	16.26	6.52	17.32	7.58	19.21	9.47	21.22	11.48	23.91	14.17	–	–	–	–
	3	–	–	17.46	7.72	18.56	8.85	20.49	10.75	22.38	12.64	–	–	–	–	–	–
128	2	–	–	–	–	18.85	7.08	20.82	9.05	22.60	10.82	25.41	13.64	27.91	16.14	–	–
	3	–	–	19.21	7.44	20.27	8.50	22.16	10.39	24.05	12.28	26.87	15.10	–	–	–	–
148	2	–	–	–	–	–	–	22.48	8.74	24.27	10.53	27.08	13.34	29.56	15.82	30.63	16.89
	3	–	–	–	–	22.13	8.39	23.97	10.23	25.76	12.02	28.58	14.84	31.08	17.34	–	–
168	2	–	–	–	–	–	–	23.87	8.17	25.67	9.96	28.48	12.77	30.98	15.27	32.02	16.32
	3	–	–	–	–	–	–	25.49	9.79	27.36	11.65	30.10	14.39	32.60	16.89	33.64	17.93

IEC Three-piece coupled motor dimensions

Reducer size	Reducer stage	71D		80D		90D		100D		112D		132D		160D		180D		200D		225D		250D	
		C	ZC	C	ZC	C	ZC	C	ZC	C	ZC	C	ZC	C	ZC	C	ZC	C	ZC	C	ZC	C	ZC
38	2	–	–	13.07	7.93	13.07	7.93	13.96	8.82	–	–	–	–	–	–	–	–	–	–	–	–	–	–
	3	–	–	13.66	8.52	13.66	8.52	–	–	–	–	–	–	–	–	–	–	–	–	–	–	–	–
48	2	–	–	13.62	7.72	13.62	7.72	14.51	8.60	14.47	8.56	–	–	–	–	–	–	–	–	–	–	–	–
	3	–	–	14.29	8.39	14.29	8.39	15.18	9.27	–	–	–	–	–	–	–	–	–	–	–	–	–	–
58	2	–	–	13.99	7.38	13.99	7.38	14.88	8.27	14.70	8.09	17.31	10.70	–	–	–	–	–	–	–	–	–	–
	3	–	–	14.74	8.13	14.74	8.13	15.63	9.02	15.47	8.86	–	–	–	–	–	–	–	–	–	–	–	–
68	2	–	–	14.19	7.48	14.19	7.48	15.08	8.37	14.96	8.25	17.38	10.67	–	–	–	–	–	–	–	–	–	–
	3	–	–	14.92	8.21	14.92	8.21	15.81	9.09	–	–	–	–	–	–	–	–	–	–	–	–	–	–
88	2	–	–	–	–	15.34	6.89	16.13	7.68	15.97	7.52	18.39	9.94	21.01	12.56	–	–	–	–	–	–	–	–
	3	–	–	16.32	7.87	16.32	7.87	17.21	8.76	17.11	8.66	19.49	11.04	–	–	–	–	–	–	–	–	–	–
108	2	–	–	–	–	16.18	6.44	16.95	7.20	16.81	7.07	19.19	9.45	21.85	12.11	23.84	14.09	23.88	14.13	–	–	–	–
	3	–	–	17.38	7.64	17.38	7.64	18.27	8.52	18.05	8.31	20.47	10.73	23.01	13.27	–	–	–	–	–	–	–	–
128	2	–	–	–	–	–	–	18.60	6.83	18.43	6.65	20.81	9.04	23.23	11.46	25.33	13.56	25.37	13.60	28.66	16.89	–	–
	3	–	–	–	–	19.13	7.36	20.02	8.25	19.76	7.99	22.15	10.37	24.69	12.91	26.79	15.02	26.83	15.06	–	–	–	–
148	2	–	–	–	–	–	–	–	–	–	–	22.46	8.72	24.90	11.16	27.00	13.27	27.05	13.31	30.33	16.59	30.51	16.77
	3	–	–	–	–	–	–	21.79	8.05	21.61	7.87	23.96	10.22	26.40	12.66	28.50	14.76	28.54	14.80	31.83	18.09	–	–
168	2	–	–	–	–	–	–	–	–	–	–	23.86	8.15	26.30	10.59	28.41	12.70	28.44	12.74	31.73	16.02	31.91	16.20
	3	–	–	–	–	–	–	–	–	–	–	25.47	9.76	27.91	12.20	30.02	14.31	30.06	14.35	33.35	17.64	33.52	17.91

Output shaft dimensions

C-face – universal mount – solid shaft

Four- and five-stage reduction

MW_4C_
MW_4L_
MW_5C_
MW_5L_

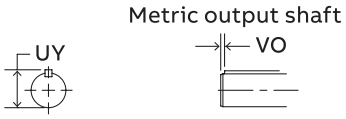

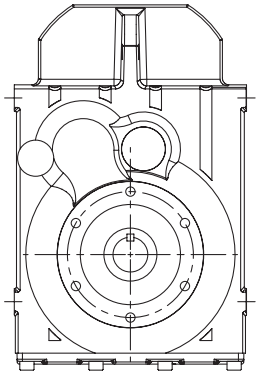

B14 Output flange

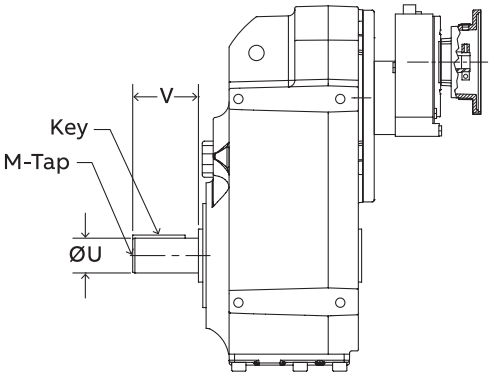

4 Stage reduction

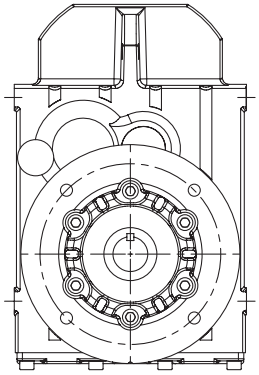

B5 Output flange

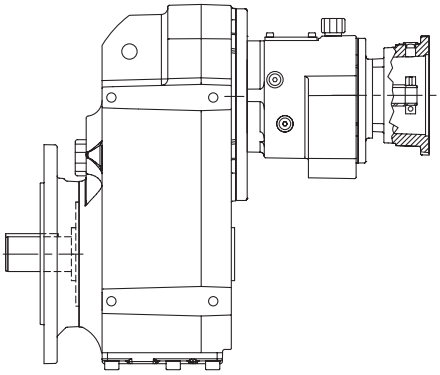

5 Stage reduction

	Standard inch output shaft						Standard metric output shaft						
	Ø U	Tol.	UY	V	Key	M–Tap	Ø U	Tol.	UY	V	VO	Key	M–Tap
68	1.625	+0.0000 −0.0010	1.80	3.15	3/8 x 3/8 x 2–5/8	5/8–11 UNC X 1.42	40	+0.018 +0.002	43	80	5	12 x 8 x 70	M16 x 36
88	2.000	+0.0000 −0.0010	2.22	3.94	1/2 x 1/2 x 3–1/4	3/4–10 UNC X 1.65	50	+0.030 +0.011	54	100	10	14 x 9 x 80	M16 x 36
108	2.375	+0.0000 −0.0010	2.65	4.72	5/8 x 5/8 x 3–11/16	3/4–10 UNC X 1.65	60	+0.030 +0.011	64	120	5	18 x 11 x 100	M20 x 42
128	2.875	+0.0000 −0.0010	3.21	5.51	3/4 x 3/4 x 4	3/4–10 UNC X 1.65	70	+0.035 +0.013	75	140	8	20 x 12 x 125	M20 x 42
148	3.625	+0.0000 −0.0010	4.01	6.69	7/8 x 7/8 x 5–1/4	1–8 UNC X 1.97	90	+0.035 +0.013	95	170	15	25 x 14 x 140	M24 x 50
168	4.375	+0.0000 −0.0010	4.82	8.27	1 x 1 x 6–5/8	1–8 UNC X 1.97	110	+0.035 +0.013	116	210	15	28 x 16 x 180	M24 x 50

See page MSM-169 for additional output shaft sizes

Gearcase dimensions

C-face – universal mount – solid shaft

Four- and five-stage reduction

MW_4C_
MW_4L_
MW_5C_
MW_5L_

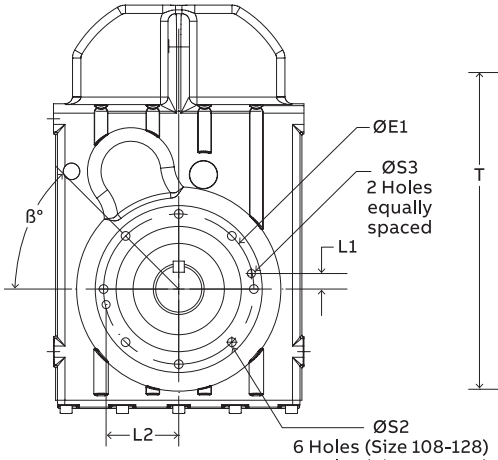

B14 Output flange
Sizes 108-168

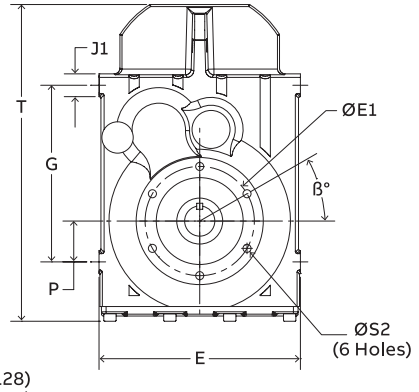

B14 Output flange
Sizes 68-88

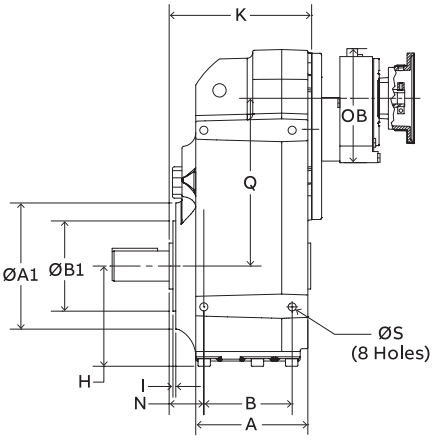

4 Stage reduction

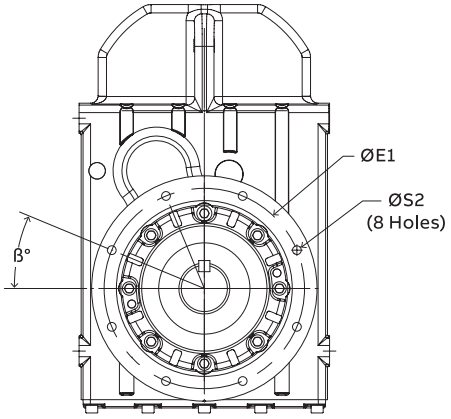

B5 Output flange
Sizes 128-168

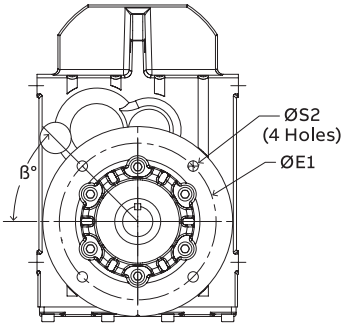

B5 Output flange
Sizes 68-108

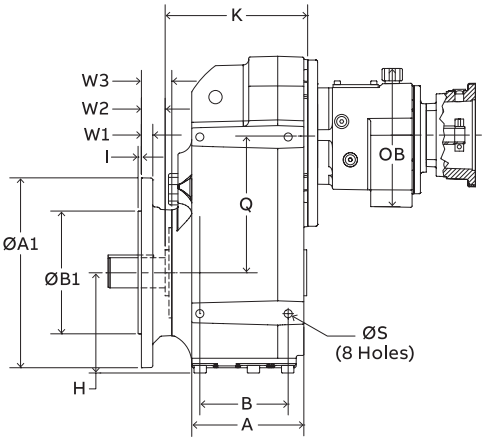

5 Stage reduction

	Mounting dimensions						Outline dimensions					4 stage		5 stage	
	B	G	H	P	Ø S	A	K	E	N	T	J1	Q	OB	Q	OB
68	4.41	9.06	5.16	2.36	M12 x 0.67	5.87	6.71	10.39	1.36	16.30	1.02	8.94	7.83	7.01	6.29
88	5.51	11.22	6.62	2.76	M16 x 0.87	7.18	8.45	13.39	1.48	20.39	1.38	11.20	9.84	8.66	8.86
108	6.50	13.78	7.33	3.94	M16 x 0.87	8.09	9.74	14.96	1.79	23.90	1.58	12.93	9.84	10.39	9.84
128	8.07	16.34	8.80	4.72	M20 x 1.06	10.45	11.7	17.72	2.46	28.47	1.97	15.53	11.57	12.46	11.57
148	8.66	18.31	10.08	4.92	M24 x 1.26	12.11	13.74	19.69	2.74	32.41	2.36	17.05	11.57	13.98	11.57
168	10.63	21.06	11.41	5.59	M30 x 1.58	14.25	15.71	23.62	3.13	36.68	2.85	19.29	11.57	16.22	11.57

	B14 mounting dimensions									B5 mounting dimensions								
	Ø A1	Ø B1	Ø E1	Ø S2	I	Ø S3	L1	L2	ß	Ø A1	Ø B1	Ø E1	Ø S2	I	W1	W2	W3	ß
68	6.27	4.33	5.12	M12 x 0.83	0.14	–	–	–	30˚	9.84	7.086	8.47	0.53	0.16	0.59	0.91	1.20	30˚
88	7.48	5.118	6.50	M12 x 0.83	0.14	–	–	–	30˚	11.81	9.055	10.43	0.53	0.16	0.63	1.46	1.79	45˚
108	9.65	7.087	8.47	M16 x 1.10	0.16	0.47	1.10	4.06	30˚	13.78	9.842	11.81	0.69	0.20	0.71	1.42	1.77	45˚
128	11.69	9.055	10.43	M16 x 1.10	0.16	0.47	1.69	4.92	30˚	17.71	13.779	15.75	0.69	0.20	0.87	1.63	1.99	22.5˚
148	13.15	9.842	11.81	M20 x 1.34	0.20	0.63	1.22	5.71	45˚	17.72	13.779	15.75	0.69	0.20	0.87	1.61	2.05	22.5˚
168	16.02	11.810	13.78	M20 x 1.34	0.20	0.63	1.46	6.73	45˚	21.65	17.716	19.69	0.69	0.20	0.98	2.01	2.44	22.5˚

Clamp collar – NEMA/IEC dimensions

C–face – universal mount – solid shaft

Four- and five-stage reduction

MW_4CN_
MW_4CI_
MW_5CN_
MW_5CI_

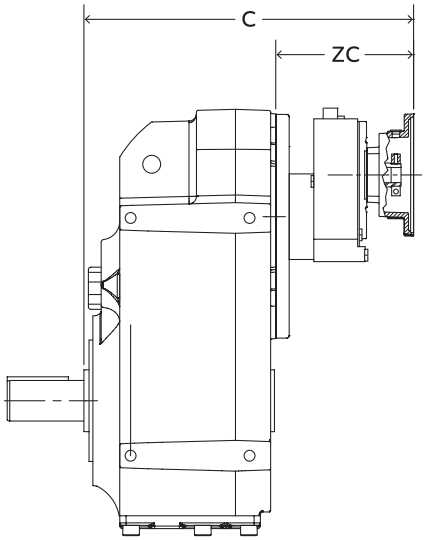

4 Stage reduction

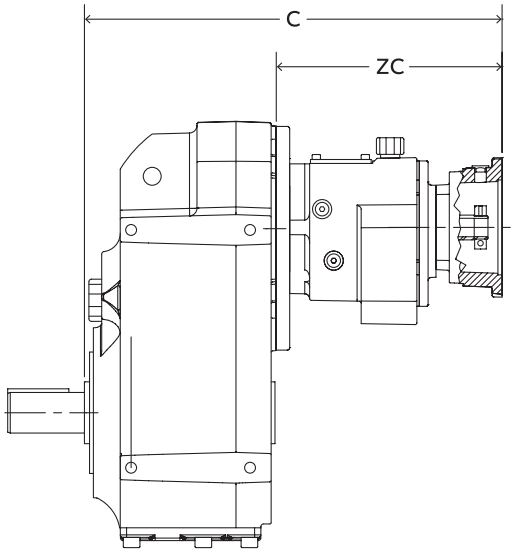

5 Stage reduction

NEMA clamp collar motor dimensions

Reducer size	Reducer stage	56C		140TC		180TC		210TC	
		C	ZC	C	ZC	C	ZC	C	ZC
68	4	14.71	8.00	15.41	8.70	15.71	9.00	–	–
	5	15.86	9.15	16.53	9.82	16.86	10.15	–	–
88	4	16.27	7.82	16.87	8.42	18.47	10.02	–	–
	5	18.61	10.16	19.28	10.83	20.85	12.40	–	–
108	4	17.88	8.14	18.48	8.74	20.08	10.34	–	–
	5	19.75	10.01	20.42	10.68	21.99	12.25	–	–
128	4	20.33	8.56	21.03	9.26	22.53	10.76	24.43	12.66
	5	21.57	9.80	22.24	10.47	23.81	12.04	–	–
148	4	22.15	8.41	22.85	9.11	24.35	10.61	26.25	12.51
	5	23.38	9.64	24.05	10.31	25.62	11.88	–	–
168	4	24.73	9.02	25.43	9.72	26.93	11.22	28.83	13.12
	5	27.10	11.39	27.77	12.06	29.27	13.56	31.19	15.48

IEC clamp collar motor dimensions

Reducer size	Reducer stage	71D		80D		90D		100D		112D		132D	
		C	ZC	C	ZC	C	ZC	C	ZC	C	ZC	C	ZC
68	4	14.01	7.30	14.91	8.20	14.91	8.20	15.21	8.50	–	–	–	–
	5	15.15	8.44	16.09	9.38	16.09	9.38	16.39	9.68	–	–	–	–
88	4	15.57	7.12	16.47	8.02	16.47	8.02	16.77	8.32	17.07	8.62	–	–
	5	17.90	9.45	18.85	10.40	18.85	10.40	19.14	10.69	19.48	11.03	–	–
108	4	17.18	7.44	18.08	8.34	18.08	8.34	18.38	8.64	18.68	8.94	–	–
	5	19.04	9.30	19.99	10.25	19.99	10.25	20.28	10.54	20.62	10.88	–	–
128	4	19.63	7.86	20.63	8.86	20.63	8.86	20.93	9.16	21.13	9.36	22.73	10.96
	5	20.86	9.09	21.81	10.04	21.81	10.04	22.10	10.33	22.44	10.67	–	–
148	4	21.45	7.71	22.45	8.71	22.45	8.71	22.75	9.01	22.95	9.21	24.55	10.81
	5	22.67	8.93	23.62	9.88	23.62	9.88	23.91	10.17	24.25	10.51	–	–
168	4	24.03	8.32	25.03	9.32	25.03	9.32	25.33	9.62	25.53	9.82	27.13	11.42
	5	26.39	10.68	27.34	11.63	27.34	11.63	27.63	11.92	27.89	12.18	29.50	13.79

Three-piece coupled – NEMA/IEC dimensions

C–face – universal mount – solid shaft

Four- and five-stage reduction

MW_4LN_
MW_4L_
MW_5LN_
MW_5LI_

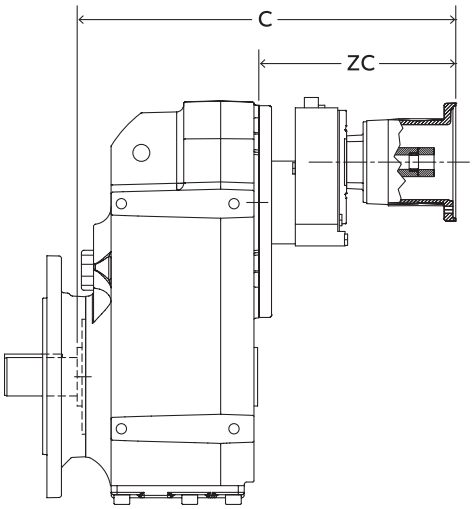

4 Stage reduction

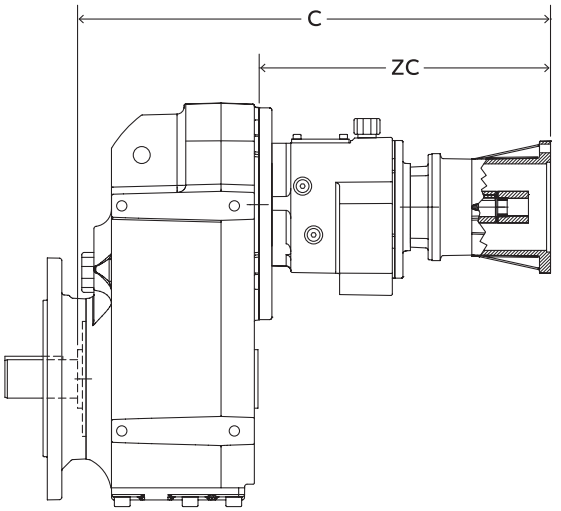

5 Stage reduction

NEMA Three-piece coupled motor dimensions

Reducer size	Reducer stage	56C		140TC		180TC		210TC	
		C	ZC	C	ZC	C	ZC	C	ZC
68	4	17.81	11.10	19.21	12.50	–	–	–	–
	5	18.99	12.28	20.40	13.69	–	–	–	–
88	4	19.37	10.92	20.77	12.32	22.07	13.62	–	–
	5	21.74	13.29	23.16	14.71	24.44	15.99	–	–
108	4	20.98	11.24	22.38	12.64	23.68	13.94	–	–
	5	22.88	13.14	24.30	14.56	25.58	15.84	–	–
128	4	23.53	11.76	24.93	13.16	26.13	14.36	28.03	16.26
	5	24.70	12.93	26.12	14.35	27.40	15.63	–	–
148	4	25.35	11.61	26.75	13.01	27.95	14.21	29.85	16.11
	5	26.51	12.77	27.93	14.19	29.21	15.47	–	–
168	4	27.93	12.22	29.33	13.62	30.53	14.82	32.43	16.72
	5	30.23	14.52	31.65	15.94	32.85	17.14	35.00	19.29

IEC Three-piece coupled motor dimensions

Reducer size	Reducer stage	71D		80D		90D		100D		112D		132D	
		C	ZC	C	ZC	C	ZC	C	ZC	C	ZC	C	ZC
68	4	–	–	19.21	12.50	19.21	12.50	20.01	13.30	–	–	–	–
	5	–	–	20.32	13.61	20.32	13.61	21.21	14.50	–	–	–	–
88	4	–	–	20.67	12.22	20.67	12.22	21.57	13.12	21.57	13.12	–	–
	5	–	–	23.08	14.63	23.08	14.63	23.96	15.51	23.92	15.47	–	–
108	4	–	–	22.28	12.54	22.28	12.54	23.18	13.44	23.18	13.44	–	–
	5	–	–	24.22	14.48	24.22	14.48	25.10	15.36	25.06	15.32	–	–
128	4	–	–	–	–	24.83	13.06	25.73	13.96	25.63	13.86	28.03	16.26
	5	–	–	26.04	14.27	26.04	14.27	26.92	15.15	26.88	15.11	–	–
148	4	–	–	–	–	26.65	12.91	27.55	13.81	27.45	13.71	29.85	16.11
	5	–	–	27.85	14.11	27.85	14.11	28.73	14.99	28.69	14.95	–	–
168	4	–	–	–	–	29.23	13.52	30.13	14.42	30.03	14.32	32.43	16.72
	5	–	–	31.57	15.86	31.57	15.86	32.46	16.75	32.34	16.63	34.76	19.05

Output shaft dimensions

Separate – universal mount – solid shaft

Double and triple reduction

MW_2SI_
MW_3SI_
MW_2SM_
MW_3SM_

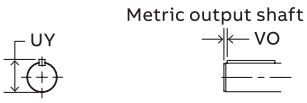

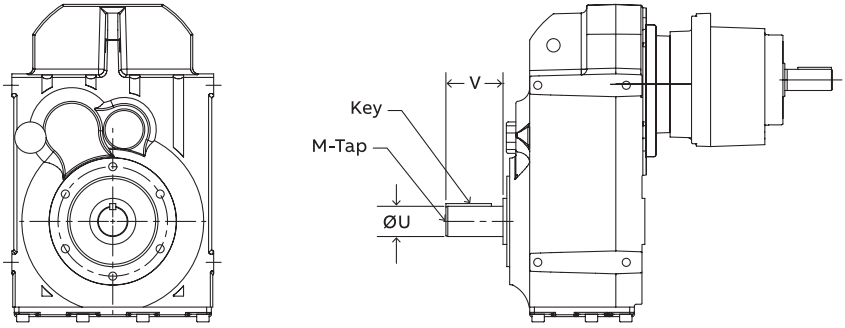

B14 Output flange

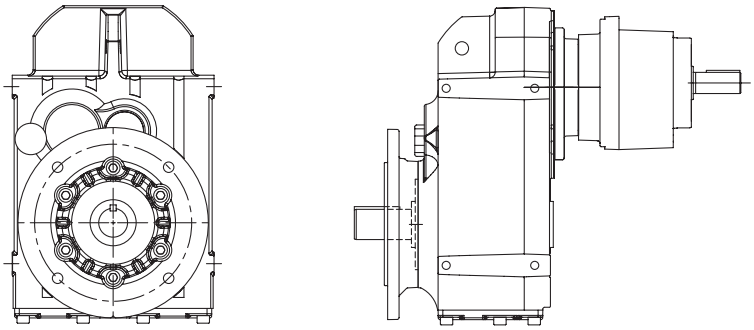

B5 Output flange

	Standard inch output shaft						Standard metric output shaft						
	Ø U	Tol.	UY	V	Key	M–Tap	Ø U	Tol.	UY	V	VO	Key	M–Tap
38	1.000	+0.0000 −0.0005	1.11	1.97	1/4 x 1/4 x 1–5/8	3/8–16 UNC X 0.87	25	+0.015 +0.002	28	50	5	8 x 7 x 40	M10 x 22
48	1.250	+0.0000 −0.0005	1.37	2.36	1/4 x 1/4 x 1–7/8	3/8–16 UNC X 0.87	30	+0.015 +0.002	33	60	4	8 x 7 x 50	M10 x 22
58	1.375	+0.0000 − 0.0005	1.49	2.76	5/16 x 5/16 x 2 –1/8	1/2 –13 UNC X 1.12	35	+0.014 +0.002	38	70	7	10 x 8 x 56	M12 x 28
68	1.625	+0.0000 −0.0010	1.80	3.15	3/8 x 3/8 x 2–5/8	5/8–11 UNC X 1.42	40	+0.018 +0.002	43	80	5	12 x 8 x 70	M16 x 36
88	2.000	+0.0000 −0.0010	2.22	3.94	1/2 x 1/2 x 3–1/4	3/4–10 UNC X 1.65	50	+0.030 +0.011	54	100	10	14 x 9 x 80	M16 x 36
108	2.375	+0.0000 −0.0010	2.65	4.72	5/8 x 5/8 x 3–11/16	3/4–10 UNC X 1.65	60	+0.030 +0.011	64	120	5	18 x 11 x 100	M20 x 42
128	2.875	+0.0000 −0.0010	3.21	5.51	3/4 x 3/4 x 4	3/4–10 UNC X 1.65	70	+0.035 +0.013	75	140	8	20 x 12 x 125	M20 x 42
148	3.625	+0.0000 −0.0010	4.01	6.69	7/8 x 7/8 x 5–1/4	1–8 UNC X 1.97	90	+0.035 +0.013	95	170	15	25 x 14 x 140	M24 x 50
168	4.375	+0.0000 −0.0010	4.82	8.27	1 x 1 x 6–5/8	1–8 UNC X 1.97	110	+0.035 +0.013	116	210	15	28 x 16 x 180	M24 x 50

See page MSM-169 for additional output shaft sizes

Gearcase dimensions

Separate – universal mount – solid shaft

Double and triple reduction

MW_2SI_
MW_3SI_
MW_2SM_
MW_3SM_

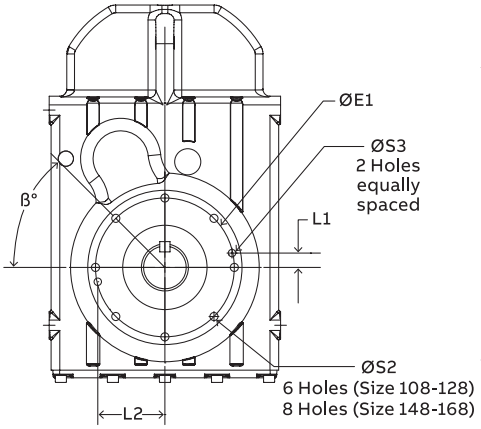

B14 Output flange
Sizes 108-168

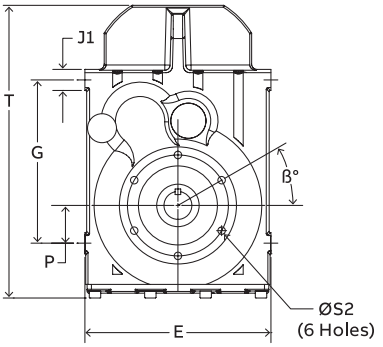

B14 Output flange
Sizes 38-88

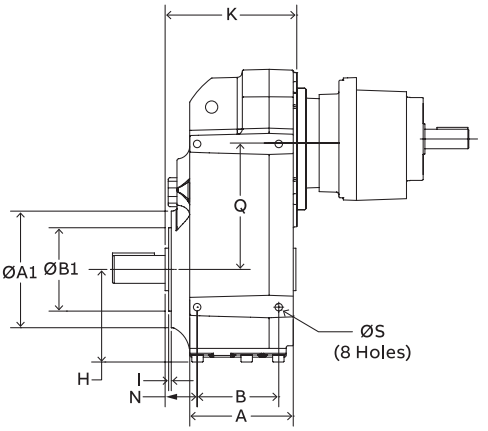

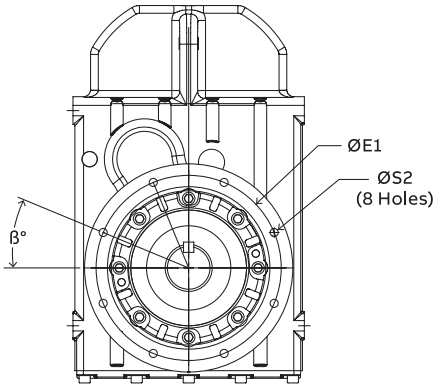

B5 Output flange
Sizes 128-168

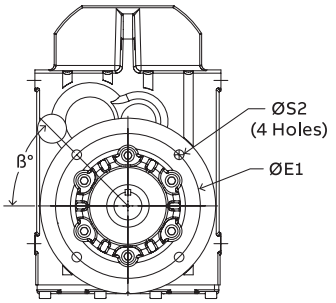

B5 Output flange
Sizes 38-108

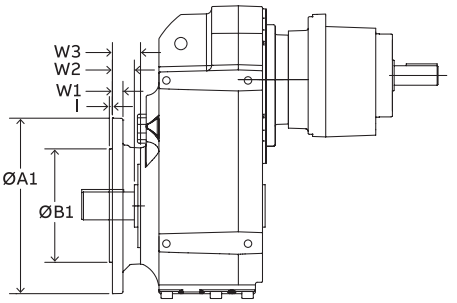

	Mounting dimensions					Outline dimensions						
	B	G	H	P	Ø S	A	K	E	N	Q	T	J1
38	3.03	5.83	3.77	1.22	M8 x 0.43	3.96	5.14	7.09	0.97	4.80	11.17	0.91
48	3.66	7.32	4.30	1.69	M10 x 0.52	4.64	5.91	8.35	1.44	5.91	13.28	0.95
58	4.02	8.15	4.67	2.13	M12 x 0.67	5.30	6.61	9.40	1.70	6.34	14.73	1.14
68	4.41	9.06	5.16	2.36	M12 x 0.67	5.87	6.71	10.39	1.36	7.01	16.30	1.02
88	5.51	11.22	6.62	2.76	M16 x 0.87	7.18	8.45	13.39	1.48	8.66	20.39	1.38
108	6.50	13.78	7.33	3.94	M16 x 0.87	8.09	9.74	14.96	1.79	10.39	23.90	1.58
128	8.07	16.34	8.80	4.72	M20 x 1.06	10.45	11.7	17.72	2.46	12.46	28.47	1.97
148	8.66	18.31	10.08	4.92	M24 x 1.26	12.11	13.74	19.69	2.74	13.98	32.41	2.36
168	10.63	21.06	11.41	5.59	M30 x 1.58	14.25	15.71	23.62	3.13	16.22	36.68	2.85

	B14 mounting dimensions									B5 mounting dimensions								
	Ø A1	Ø B1	Ø E1	Ø S2	I	Ø S3	L1	L2	ß	Ø A1	Ø B1	Ø E1	Ø S2	I	W1	W2	W3	ß
38	4.75	3.149	3.94	M8 x 0.63	0.12	–	–	–	30˚	6.30	4.331	5.12	0.35	0.14	0.39	0.95	1.18	30˚
48	5.20	3.470	4.53	M10 x 0.67	0.12	–	–	–	30˚	7.87	5.118	6.50	0.43	0.14	0.47	0.98	1.26	30˚
58	5.91	4.3308	5.12	M12 x 0.83	0.16	–	–	–	30˚	9.84	7.0867	8.47	0.53	0.16	0.59	0.91	1.20	45˚
68	6.27	4.33	5.12	M12 x 0.83	0.14	–	–	–	30˚	9.84	7.086	8.47	0.53	0.16	0.59	0.91	1.20	30˚
88	7.48	5.118	6.50	M12 x 0.83	0.14	–	–	–	30˚	11.81	9.055	10.43	0.53	0.16	0.63	1.46	1.79	45˚
108	9.65	7.087	8.47	M16 x 1.10	0.16	0.47	1.10	4.06	30˚	13.78	9.842	11.81	0.69	0.20	0.71	1.42	1.77	45˚
128	11.69	9.055	10.43	M16 x 1.10	0.16	0.47	1.69	4.92	30˚	17.71	13.779	15.75	0.69	0.20	0.87	1.63	1.99	22.5˚
148	13.15	9.842	11.81	M20 x 1.34	0.20	0.63	1.22	5.71	45˚	17.72	13.779	15.75	0.69	0.20	0.87	1.61	2.05	22.5˚
168	16.02	11.810	13.78	M20 x 1.34	0.20	0.63	1.46	6.73	45˚	21.65	17.716	19.69	0.69	0.20	0.98	2.01	2.44	22.5˚

Separate input shaft dimensions

Universal mount – solid shaft

Double and triple reduction

MW_2SI_
MW_3SI_
MW_2SM_
MW_3SM_

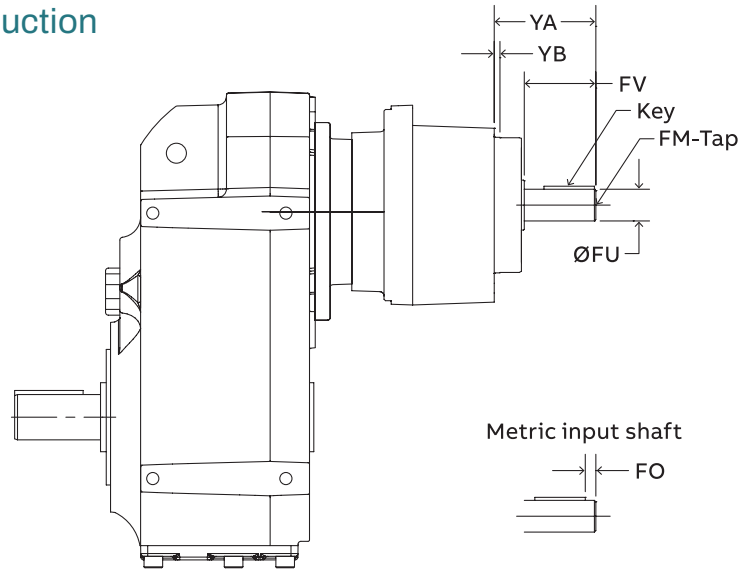

	Separate input mounting dimensions							
	Ø FU	Tol	FO	FV	YA	YB	FM x Depth	Key
71	0.625	+0.0000 –0.0005	–	1.57	2.40	0.16	8–32 UNC x 0.49	3/16 x 3/16 x 1–5/16
	16	+0.012 +0.001	4	40			M5 x 12.5	5 x 5 x 32
80	0.750	+0.0000 –0.0005	–	1.57	2.40	0.16	1/4–20 UNC x 0.63	3/16 x 3/16 x1–5/16
	19	+0.015 +0.002	4	10			M6 x 16	6 x 6 x 32
90	0.875	+0.0000 –0.0005	–	1.97	2.80	0.16	5/16–18 UNC x 0.75	3/16 x 3/16 x 1–5/8
	24	+0.015 +0.002	5	50			M8 x 19	8 x 7 x 40
100	1.125	+0.0000 –0.0005	–	2.36	3.27	0.16	3/8–16 UNC x 0.87	1/4 x 1/4 x 2
	28	+0.015 +0.002	5	60			M10 x 22	8 x 7 x 50
112	1.250	+0.0000 –0.0005	–	2.36	3.27	0.16	3/8–16 UNC x 0.87	1/4 x 1/4 x 2
	28	+0.015 +0.002	5	60			M10 x 22	8 x 7 x 50
132	1.375	+0.0000 –0.0005	–	3.15	6.61	0.14	3/8–16 UNC x 1.10	5/16 x 5/16 x 2–3/4
	38	+0.018 +0.002	5	80			M12 x 28	10 x 8 x 70
160	1.625	+0.0000 –0.0010	–	4.33	8.46	0.14	5/8–11 UNC x 1.42	3/8 x 3/8 x 3–1/2
	42	+0.018 +0.002	10	110			M16 x 36	12 x 8 x 90
180	2.125	+0.0000 –0.0010	–	4.33	9.25	0.20	3/4–10 UNC x 1.65	1/2 x 1/2 x 3–5/8
	55	+0.030 +0.011	10	110			M20 x 42	16 x 10 x 90
225	2.125	+0.0000 –0.0010	–	4.33	9.05	0.20	3/4–10 UNC x 1.65	1/2 x 1/2 x 3–5/8
	60	+0.030 +0.011	15	140			M20 x 42	18 x 11 x 110
250	2.375	+0.0000 –0.0010	–	5.51	10.20	0.20	3/4–10 UNC x 1.65	5/8 x 5/8 x 4–3/8
	65	+0.030 +0.011	15	140			M20 x 42	18 x 11 x 110

Separate input shaft dimensions

Universal mount – solid shaft

Double and triple reduction

MW_2SI_
MW_3SI_
MW_2SM_
MW_3SM_

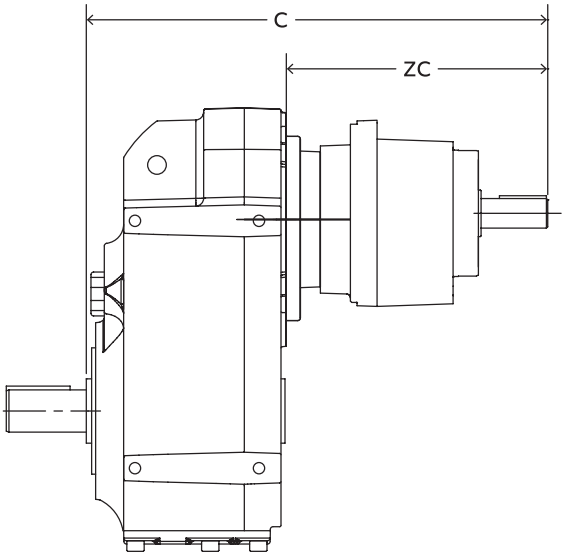

Inch separate input dimensions

Reducer size	Reducer stage	71		80		90		100		112		132		160		180		225		250	
		C	ZC	C	ZC	C	ZC	C	ZC	C	ZC	C	ZC	C	ZC	C	ZC	C	ZC	C	ZC
38	2	11.08	5.94	12.46	7.32	12.85	7.72	13.48	8.35	–	–	–	–	–	–	–	–	–	–	–	–
	3	11.67	6.54	13.05	7.91	13.44	8.31	–	–	–	–	–	–	–	–	–	–	–	–	–	–
48	2	11.63	5.73	13.01	7.11	13.41	7.50	14.04	8.13	14.07	8.17	–	–	–	–	–	–	–	–	–	–
	3	12.30	6.40	13.68	7.78	14.07	8.17	14.70	8.80	–	–	–	–	–	–	–	–	–	–	–	–
58	2	12.00	5.39	13.38	6.77	13.78	7.17	14.40	7.79	14.31	7.70	17.82	11.21	–	–	–	–	–	–	–	–
	3	12.75	6.14	14.13	7.52	14.53	7.92	15.15	8.54	15.08	8.47	–	–	–	–	–	–	–	–	–	–
68	2	12.20	5.49	13.58	6.87	13.98	7.26	14.61	7.89	14.57	7.85	17.89	11.18	–	–	–	–	–	–	–	–
	3	12.93	6.22	14.31	7.60	14.70	7.99	15.33	8.62	–	–	–	–	–	–	–	–	–	–	–	–
88	2	–	–	–	–	15.12	6.67	15.65	7.20	15.57	7.13	18.90	10.45	20.61	12.17	–	–	–	–	–	–
	3	14.33	5.89	15.71	7.26	16.1	7.66	16.73	8.29	16.71	8.27	20.00	11.56	–	–	–	–	–	–	–	–
108	2	–	–	–	–	15.96	6.22	16.48	6.73	16.42	6.67	19.70	9.96	21.46	11.71	22.26	12.52	–	–	–	–
	3	–	–	16.77	7.03	17.17	7.42	17.80	8.05	17.66	7.91	20.98	11.24	22.62	12.87	–	–	–	–	–	–
128	2	–	–	–	–	–	–	18.13	6.36	18.03	6.26	21.32	9.55	22.83	11.06	23.76	11.99	24.84	13.07	–	–
	3	–	–	–	–	18.92	7.15	19.55	7.78	19.37	7.60	22.66	10.89	24.29	12.52	25.22	13.44	–	–	–	–
148	2	–	–	–	–	–	–	–	–	–	–	22.97	9.23	24.51	10.77	25.43	11.69	26.52	12.78	27.68	13.94
	3	–	–	–	–	–	–	21.32	7.58	21.22	7.48	24.47	10.73	26.00	12.26	26.93	13.19	28.01	14.27	–	–
168	2	–	–	–	–	–	–	–	–	–	–	24.37	8.66	25.91	10.20	26.83	11.12	27.91	12.21	29.08	13.37
	3	–	–	–	–	–	–	–	–	–	–	25.99	10.28	27.60	11.89	28.45	12.74	29.53	13.82	30.7	14.98

Metric separate input dimensions (dimensions in mm)

Reducer size	Reducer stage	71		80		90		100		112		132		160		180		225		250	
		C	ZC	C	ZC	C	ZC	C	ZC	C	ZC	C	ZC	C	ZC	C	ZC	C	ZC	C	ZC
38	2	282	151	317	186	327	196	343	212	–	–	–	–	–	–	–	–	–	–	–	–
	3	297	166	332	201	342	211	–	–	–	–	–	–	–	–	–	–	–	–	–	–
48	2	296	146	331	181	341	191	357	207	358	208	–	–	–	–	–	–	–	–	–	–
	3	313	163	348	198	358	208	374	224	–	–	–	–	–	–	–	–	–	–	–	–
58	2	305	137	340	172	350	182	366	198	363	196	453	285	–	–	–	–	–	–	–	–
	3	324	156	359	191	369	201	385	198	383	215	–	–	–	–	–	–	–	–	–	–
68	2	310	140	345	175	355	185	371	201	370	200	455	284	–	–	–	–	–	–	–	–
	3	329	158	364	193	374	203	390	219	–	–	–	–	–	–	–	–	–	–	–	–
88	2	–	–	–	–	384	170	398	183	396	181	480	266	524	309	–	–	–	–	–	–
	3	364	150	399	185	409	195	425	211	425	210	508	394	–	–	–	–	–	–	–	–
108	2	–	–	–	–	406	158	419	171	471	170	501	253	545	298	566	318	–	–	–	–
	3	–	–	426	179	436	189	452	205	449	201	533	286	575	327	–	–	–	–	–	–
128	2	–	–	–	–	–	–	461	162	458	159	542	243	580	281	604	305	661	362	–	–
	3	–	–	–	–	481	182	497	198	492	193	576	277	617	318	641	342	–	–	–	–
148	2	–	–	–	–	–	–	–	–	–	–	584	235	623	274	646	297	703	355	703	354
	3	–	–	–	–	–	–	542	193	539	190	622	273	661	312	684	335	741	393	–	–
168	2	–	–	–	–	–	–	–	–	–	–	619	220	658	259	682	283	739	340	739	340
	3	–	–	–	–	–	–	–	–	–	–	660	261	701	302	723	324	780	381	780	381

Output shaft dimensions

Separate – universal mount – solid shaft

Four- and five-stage reduction

MW_4SI_
MW_5SI_
MW_4SM_
MW_5SM_

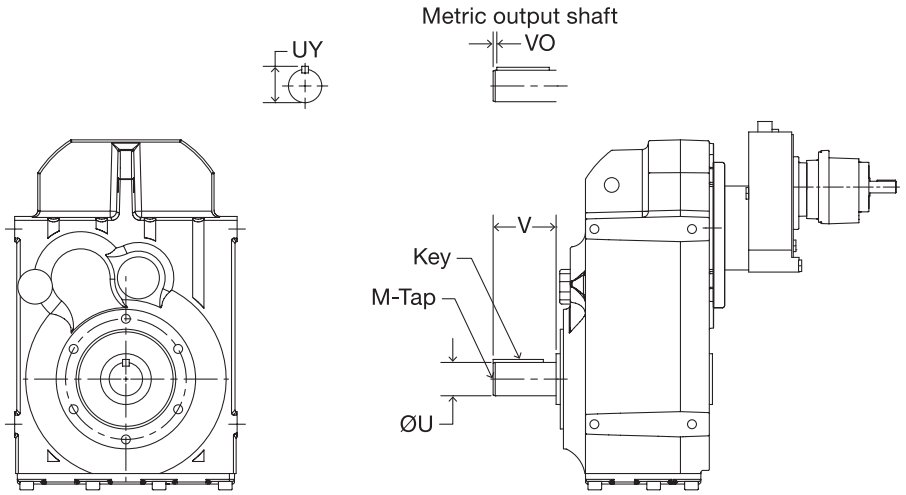

4 Stage reduction

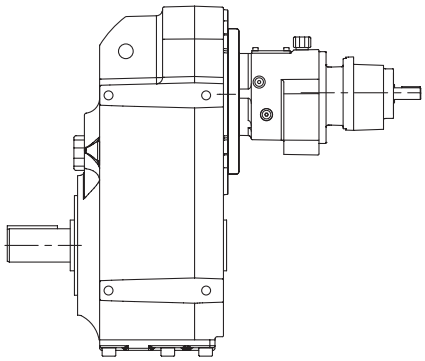

5 Stage reduction

	Standard inch output shaft						Standard metric output shaft						
	Ø U	Tol.	UY	V	Key	M–Tap	Ø U	Tol.	UY	V	Vo	Key	M–Tap
68	1.625	+0.0000 −0.0010	1.80	3.15	3/8 x 3/8 x 2–5/8	5/8–11 UNC X 1.42	40	+0.018 +0.002	43	80	5	12 x 8 x 70	M16 x 36
88	2.000	+0.0000 −0.0010	2.22	3.94	1/2 x 1/2 x 3–1/4	3/4–10 UNC X 1.65	50	+0.030 +0.011	54	100	10	14 x 9 x 80	M16 x 36
108	2.375	+0.0000 −0.0010	2.65	4.72	5/8 x 5/8 x 3–11/16	3/4–10 UNC X 1.65	60	+0.030 +0.011	64	120	5	18 x 11 x 100	M20 x 42
128	2.875	+0.0000 −0.0010	3.21	5.51	3/4 x 3/4 x 4	3/4–10 UNC X 1.65	70	+0.035 +0.013	75	140	8	20 x 12 x 125	M20 x 42
148	3.625	+0.0000 −0.0010	4.01	6.69	7/8 x 7/8 x 5–1/4	1–8 UNC X 1.97	90	+0.035 +0.013	95	170	15	25 x 14 x 140	M24 x 50
168	4.375	+0.0000 −0.0010	4.62	8.27	1 x 1 x 6–5/8	1–8 UNC X 1.97	110	+0.035 +0.013	116	210	15	28 x 16 x 180	M24 x 50

See page MSM-169 for additional output shaft sizes

Gearcase dimensions

Separate – universal mount – solid shaft

Four- and five-stage reduction

MW_4SI_
MW_5SI_
MW_4SM_
MW_5SM_

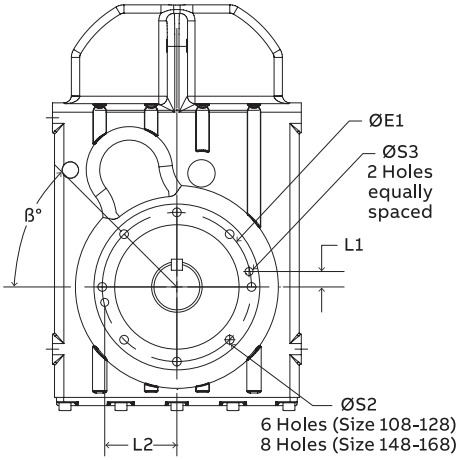

B14 Output flange
Sizes 108-168

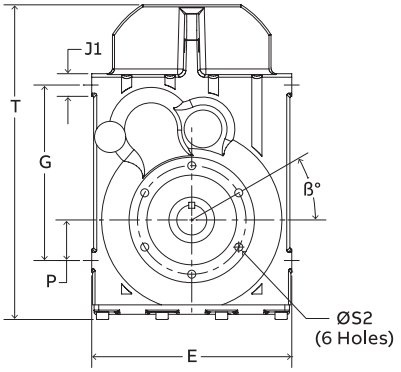

B14 Output flange
Sizes 68-88

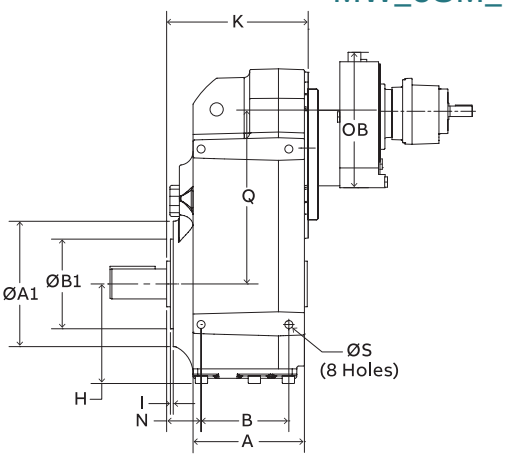

4 Stage reduction

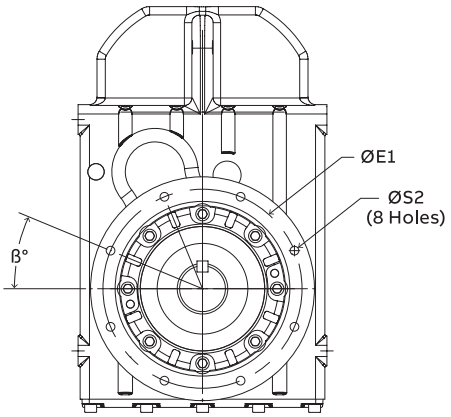

B5 Output flange
Sizes 128-168

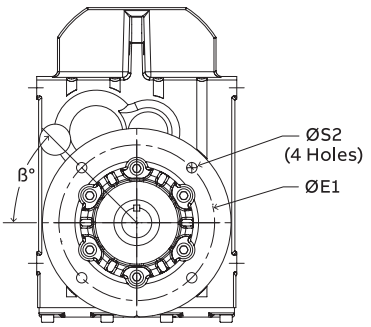

B5 Output flange
Sizes 68-108

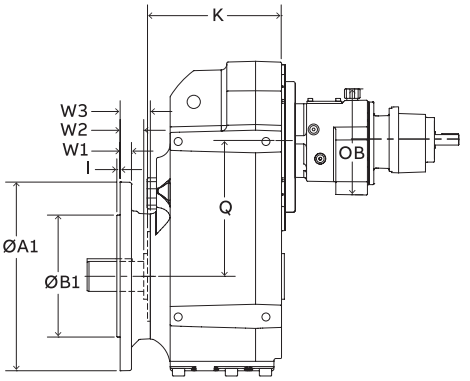

5 Stage reduction

	Mounting dimensions					Outline dimensions						4 stage		5 stage	
	B	G	H	P	Ø S	A	K	E	N	T	J1	Q	OB	Q	OB
68	4.41	9.06	5.16	2.36	M12 x 0.67	5.87	6.71	10.39	1.36	16.30	1.02	8.94	7.83	7.01	6.29
88	5.51	11.22	6.62	2.76	M16 x 0.87	7.18	8.45	13.39	1.48	20.39	1.38	11.20	9.84	8.66	8.86
108	6.50	13.78	7.33	3.94	M16 x 0.87	8.09	9.74	14.96	1.79	23.90	1.58	12.93	9.84	10.39	9.84
128	8.07	16.34	8.80	4.72	M20 x 1.06	10.45	11.7	17.72	2.46	28.47	1.97	15.53	11.57	12.46	11.57
148	8.66	18.31	10.08	4.92	M24 x 1.26	12.11	13.74	19.69	2.74	32.41	2.36	17.05	11.57	13.98	11.57
168	10.63	21.06	11.41	5.59	M30 x 1.58	14.25	15.71	23.62	3.13	36.68	2.85	19.29	11.57	16.22	11.57

	B14 mounting dimensions									B5 mounting dimensions									
	Ø A1	Ø B1	Ø E1	Ø S2	I	Ø S3	L1	L2	ß	Ø A1	Ø B1	Ø E1	Ø S2	I	W1	W2	W3	ß	
68	6.27	4.33	5.12	M12 x 0.83	0.14	–	–	–	30˚	9.84	7.086	8.47	0.53	–	0.16	0.59	0.91	1.20	30˚
88	7.48	5.118	6.50	M12 x 0.83	0.14	–	–	–	30˚	11.81	9.055	10.43	0.53	–	0.16	0.63	1.46	1.79	45˚
108	9.65	7.087	8.47	M16 x 1.10	0.16	0.47	1.10	4.06	30˚	13.78	9.842	11.81	0.69	–	0.20	0.71	1.42	1.77	45˚
128	11.69	9.055	10.43	M16 x 1.10	0.16	0.47	1.69	4.92	30˚	17.71	13.779	15.75	0.69	–	0.20	0.87	1.63	1.99	22.5˚
148	13.15	9.842	11.81	M20 x 1.34	0.20	0.63	1.22	5.71	45˚	17.72	13.779	15.75	0.69	–	0.20	0.87	1.61	2.05	22.5˚
168	16.02	11.810	13.78	M20 x 1.34	0.20	0.63	1.46	6.73	45˚	21.65	17.716	19.69	0.69	–	0.20	0.98	2.01	2.44	22.5˚

Separate input shaft dimensions

Universal mount – solid shaft

Four- and five-stage reduction

MW_4SI_
MW_5SI_
MW_4SM_
MW_5SM_

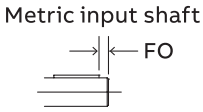

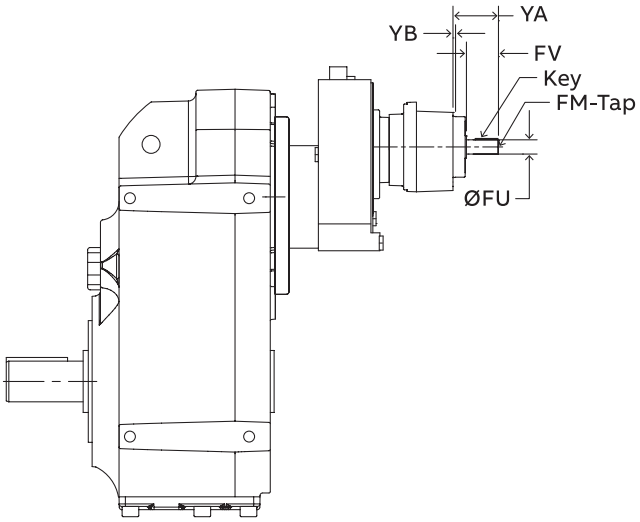

4 Stage reduction

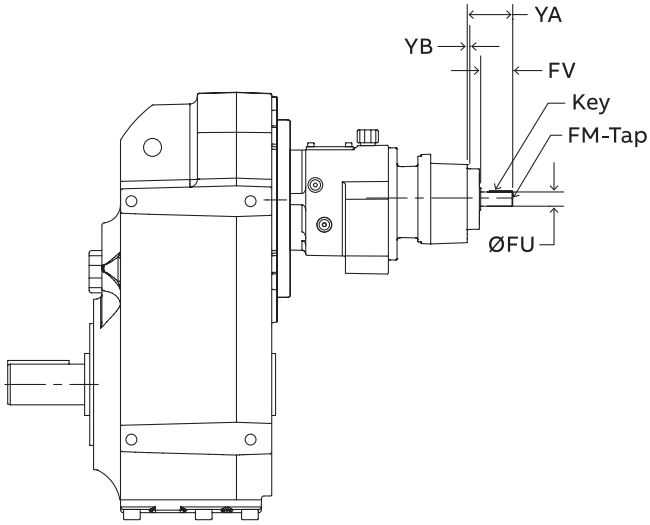

5 Stage reduction

	Separate input mounting dimensions							
	Ø FU	Tol	FO	FV	YA	YB	FM x Depth	Key
71	0.625	+0.0000 –0.0005	–	1.57	2.40	0.16	8–32 UNC x 0.49	3/16 x 3/16 x 1–5/16
	16	+0.012 +0.001	4	40			M5 x 12.5	5 x 5 x 32
80	0.750	+0.0000 –0.0005	–	1.57	2.40	0.16	1/4–20 UNC x 0.63	3/16 x 3/16 x1–5/16
	19	+0.015 +0.002	4	10			M6 x 16	6 x 6 x 32
90	0.875	+0.0000 –0.0005	–	1.97	2.80	0.16	5/16–18 UNC x 0.75	3/16 x 3/16 x 1–5/8
	24	+0.015 +0.002	5	50			M8 x 19	8 x 7 x 40
100	1.125	+0.0000 –0.0005	–	2.36	3.27	0.16	3/8–16 UNC x 0.87	1/4 x 1/4 x 2
	28	+0.015 +0.002	5	60			M10 x 22	8 x 7 x 50
112	1.250	+0.0000 –0.0005	–	2.36	3.27	0.16	3/8–16 UNC x 0.87	1/4 x 1/4 x 2
	28	+0.015 +0.002	5	60			M10 x 22	8 x 7 x 50
132	1.375	+0.0000 –0.0005	–	3.15	6.61	0.14	3/8–16 UNC x 1.10	5/16 x 5/16 x 2–3/4
	38	+0.018 +0.002	5	80			M12 x 28	10 x 8 x 70

Separate input shaft dimensions

Universal mount – solid shaft

Four- and five-stage reduction

MW_4SI_
MW_5SI_
MW_4SM_
MW_5SM_

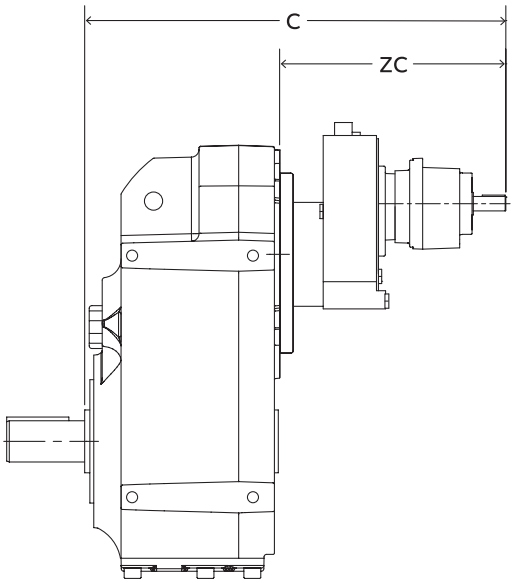

4 Stage reduction

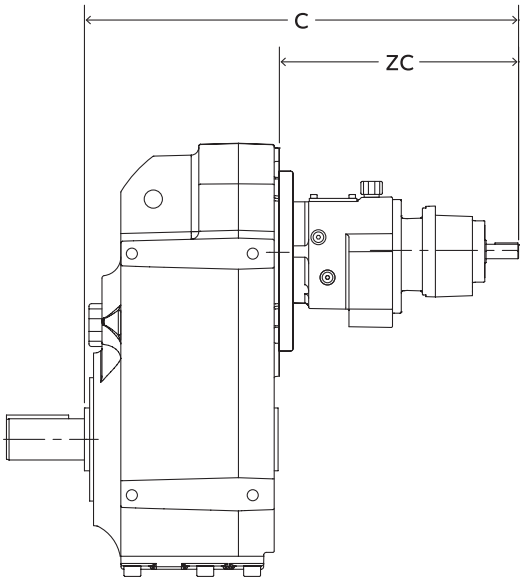

5 Stage reduction

Inch separate input dimensions

Reducer size	Reducer stage	71		80		90		100		112		132	
		C	ZC	C	ZC	C	ZC	C	ZC	C	ZC	C	ZC
68	4	17.21	10.50	18.51	11.80	18.91	12.20	19.61	12.90	–	–	–	–
	5	18.34	11.63	19.71	13.00	20.11	13.40	20.74	14.03	–	–	–	–
88	4	18.77	10.32	20.07	11.62	20.47	12.02	21.17	12.72	21.17	12.72	–	–
	5	21.11	12.66	22.49	14.04	22.88	14.43	23.51	15.06	23.55	15.10	–	–
108	4	20.38	10.64	21.68	11.94	22.08	12.34	22.78	13.04	22.78	13.04	–	–
	5	22.25	12.51	23.63	13.89	24.02	14.28	24.65	14.91	24.69	14.95	–	–
128	4	22.83	11.06	24.23	12.46	24.63	12.86	25.23	13.46	25.23	13.46	28.53	16.76
	5	24.07	12.30	25.45	13.68	25.84	14.07	26.47	14.70	26.51	14.74	–	–
148	4	24.65	10.91	26.05	12.31	26.45	12.71	27.05	13.31	27.05	13.31	30.35	16.61
	5	25.88	12.14	27.26	13.52	27.65	13.91	28.28	14.54	28.32	14.58	–	–
168	4	27.23	11.52	28.63	12.92	29.03	13.32	29.63	13.92	29.63	13.92	32.93	17.22
	5	29.60	13.89	30.98	15.27	31.37	15.66	32.00	16.29	31.96	16.25	35.27	19.56

Metric separate input dimensions (dimensions in mm)

Reducer size	Reducer stage	71		80		90		100		112		132	
		C	ZC	C	ZC	C	ZC	C	ZC	C	ZC	C	ZC
68	4	437	267	470	300	480	310	498	328	–	–	–	–
	5	466	295	501	330	511	340	527	356	–	–	–	–
88	4	477	262	510	295	520	305	538	323	538	323	–	–
	5	536	322	571	357	581	367	597	383	598	384	–	–
108	4	518	270	551	303	561	313	579	331	579	331	–	–
	5	565	318	600	353	610	363	626	379	627	380	–	–
128	4	580	281	615	316	626	327	641	342	641	342	725	426
	5	611	312	646	347	656	357	672	373	673	374	–	–
148	4	626	277	662	313	672	323	687	338	687	338	771	422
	5	657	308	692	343	702	353	718	369	719	370	–	–
168	4	692	293	727	328	737	338	753	353	753	353	836	437
	5	752	353	787	388	797	398	813	414	812	413	896	497

Output shaft dimensions

Integral – universal mount – solid shaft

Double and triple reduction

MW_2GH_
MW_3GH_

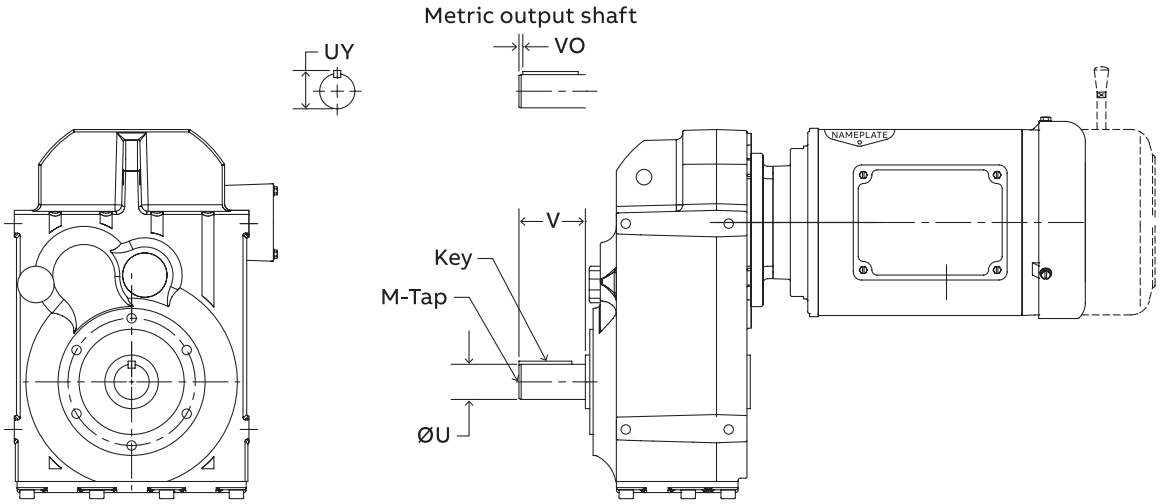

B14 Output flange

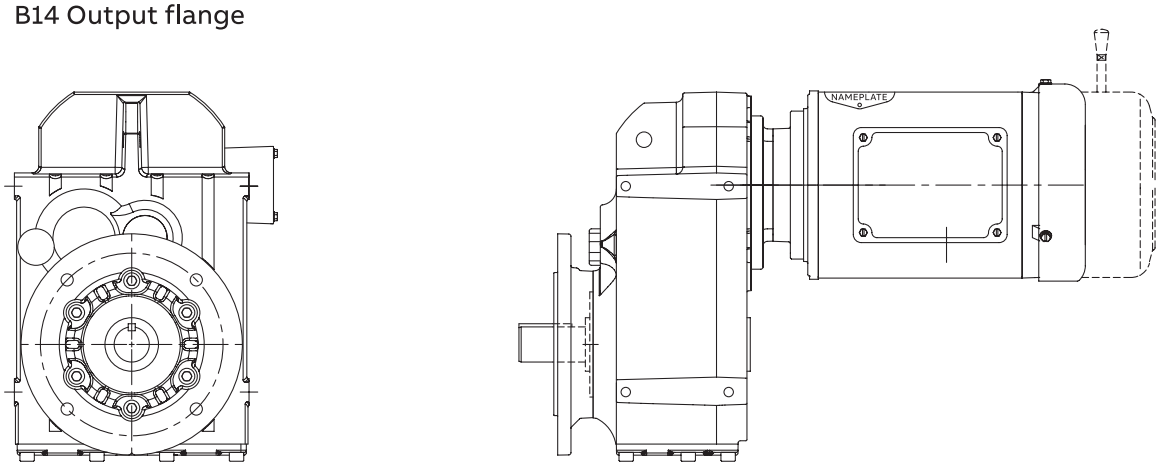

B5 Output flange

	Standard inch output shaft						Standard metric output shaft						
	Ø U	Tol.	UY	V	Key	M–Tap	Ø U	Tol.	UY	V	VO	Key	M–Tap
38	1.000	+0.0000 −0.0005	1.11	1.97	1/4 x 1/4 x 1–5/8	3/8–16 UNC X 0.87	25	+0.015 +0.002	28	50	5	8 x 7 x 40	M10 x 22
48	1.250	+0.0000 −0.0005	1.37	2.36	1/4 x 1/4 x 1–7/8	3/8–16 UNC X 0.87	30	+0.015 +0.002	33	60	4	8 x 7 x 50	M10 x 22
58	1.375	+0.0000 − 0.0005	1.49	2.76	5/16 x 5/16 x 2 –1/8	1/2 –13 UNC X 1.12	35	+0.014 +0.002	38	70	7	10 x 8 x 56	M12 x 28
68	1.625	+0.0000 −0.0010	1.80	3.15	3/8 x 3/8 x 2–5/8	5/8–11 UNC X 1.42	40	+0.018 +0.002	43	80	5	12 x 8 x 70	M16 x 36
88	2.000	+0.0000 −0.0010	2.22	3.94	1/2 x 1/2 x 3–1/4	3/4–10 UNC X 1.65	50	+0.030 +0.011	54	100	10	14 x 9 x 80	M16 x 36
108	2.375	+0.0000 −0.0010	2.65	4.72	5/8 x 5/8 x 3–11/16	3/4–10 UNC X 1.65	60	+0.030 +0.011	64	120	5	18 x 11 x 100	M20 x 42
128	2.875	+0.0000 −0.0010	3.21	5.51	3/4 x 3/4 x 4	3/4–10 UNC X 1.65	70	+0.035 +0.013	75	140	8	20 x 12 x 125	M20 x 42
148	3.625	+0.0000 −0.0010	4.01	6.69	7/8 x 7/8 x 5–1/4	1–8 UNC X 1.97	90	+0.035 +0.013	95	170	15	25 x 14 x 140	M24 x 50
168	4.375	+0.0000 −0.0010	4.82	8.27	1 x 1 x 6–5/8	1–8 UNC X 1.97	110	+0.035 +0.013	116	210	15	28 x 16 x 180	M24 x 50

See page MSM-169 for additional output shaft sizes

Gearcase dimensions

MW_2GH_
MW_3GH_

Integral – universal mount – solid shaft
Double and triple reduction

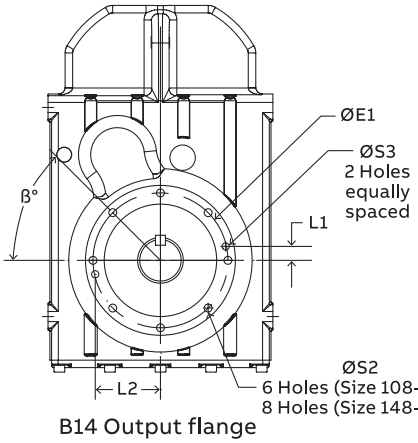

B14 Output flange
Sizes 108-168

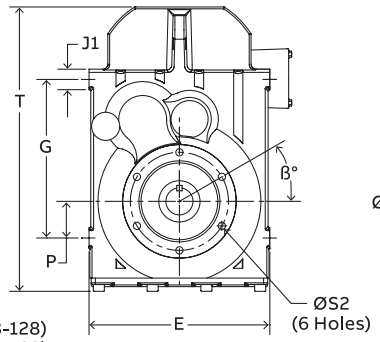

B14 Output flange
Size 38-88

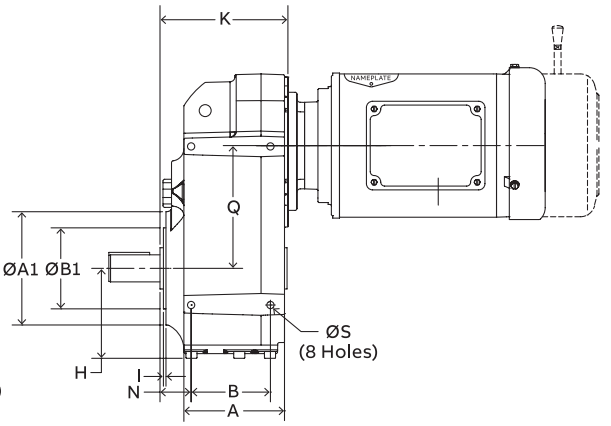

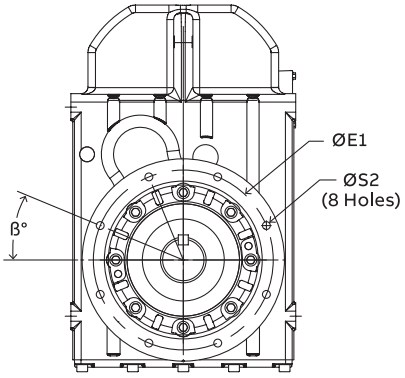

B5 Output flange
Sizes 128-168

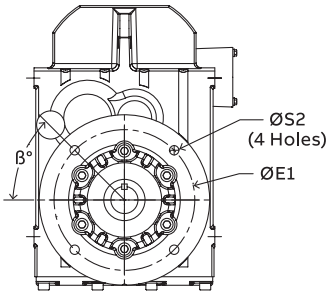

B5 Output flange
Sizes 38-108

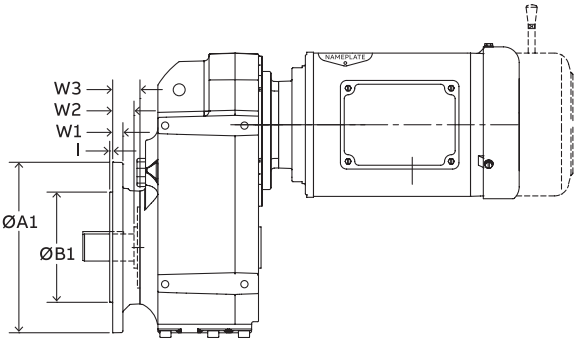

	Mounting dimensions					Outline dimensions						
	B	G	H	P	Ø S	A	K	E	N	Q	T	J1
38	3.03	5.83	3.77	1.22	M8 x 0.43	3.96	5.14	7.09	0.97	4.80	11.17	0.91
48	3.66	7.32	4.30	1.69	M10 x 0.52	4.64	5.91	8.35	1.44	5.91	13.28	0.95
58	4.02	8.15	4.67	2.13	M12 x 0.67	5.30	6.61	9.40	1.70	6.34	14.73	1.14
68	4.41	9.06	5.16	2.36	M12 x 0.67	5.87	6.71	10.39	1.36	7.01	16.30	1.02
88	5.51	11.22	6.62	2.76	M16 x 0.87	7.18	8.45	13.39	1.48	8.66	20.39	1.38
108	6.50	13.78	7.33	3.94	M16 x 0.87	8.09	9.74	14.96	1.79	10.39	23.90	1.58
128	8.07	16.34	8.80	4.72	M20 x 1.06	10.45	11.7	17.72	2.46	12.46	28.47	1.97
148	8.66	18.31	10.08	4.92	M24 x 1.26	12.11	13.74	19.69	2.74	13.98	32.41	2.36
168	10.63	21.06	11.41	5.59	M30 x 1.58	14.25	15.71	23.62	3.13	16.22	36.68	2.85

	B14 mounting dimensions									B5 mounting dimensions								
	Ø A1	Ø B1	Ø E1	Ø S2	I	Ø S3	L1	L2	ß	Ø A1	Ø B1	Ø E1	Ø S2	I	W1	W2	W3	ß
38	4.75	3.149	3.94	M8 x 0.63	0.12	–	–	–	30˚	6.30	4.331	5.12	0.35	0.14	0.39	0.95	1.18	30˚
48	5.20	3.470	4.53	M10 x 0.67	0.12	–	–	–	30˚	7.87	5.118	6.50	0.43	0.14	0.47	0.98	1.26	30˚
58	5.91	4.3308	5.12	M12 x 0.83	0.16	–	–	–	30˚	9.84	7.0867	8.47	0.53	0.16	0.59	0.91	1.20	45˚
68	6.27	4.33	5.12	M12 x 0.83	0.14	–	–	–	30˚	9.84	7.086	8.47	0.53	0.16	0.59	0.91	1.20	30˚
88	7.48	5.118	6.50	M12 x 0.83	0.14	–	–	–	30˚	11.81	9.055	10.43	0.53	0.16	0.63	1.46	1.79	45˚
108	9.65	7.087	8.47	M16 x 1.10	0.16	0.47	1.10	4.06	30˚	13.78	9.842	11.81	0.69	0.20	0.71	1.42	1.77	45˚
128	11.69	9.055	10.43	M16 x 1.10	0.16	0.47	1.69	4.92	30˚	17.71	13.779	15.75	0.69	0.20	0.87	1.63	1.99	22.5˚
148	13.15	9.842	11.81	M20 x 1.34	0.20	0.63	1.22	5.71	45˚	17.72	13.779	15.75	0.69	0.20	0.87	1.61	2.05	22.5˚
168	16.02	11.810	13.78	M20 x 1.34	0.20	0.63	1.46	6.73	45˚	21.65	17.716	19.69	0.69	0.20	0.98	2.01	2.44	22.5˚

Integral – standard motor dimensions

MW_2GH_
MW_3GH_

Universal mount – solid shaft

Double and triple reduction

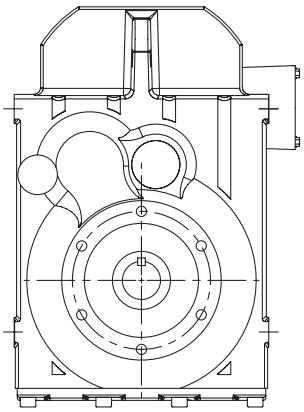

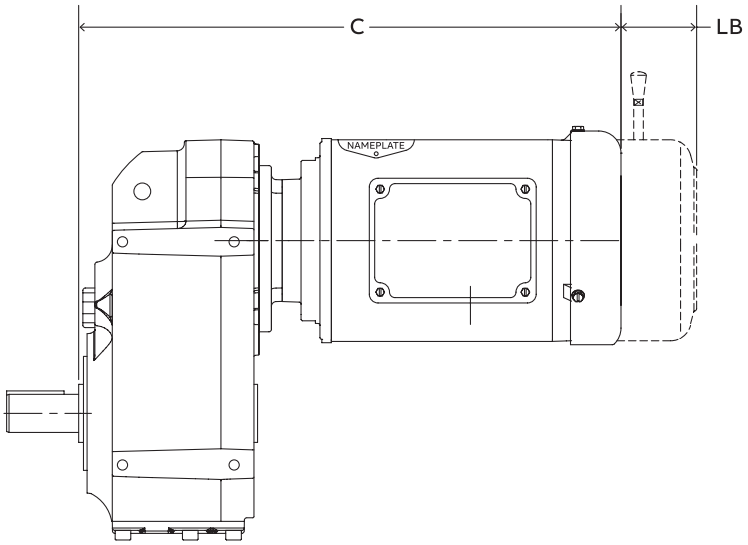

Standard integral motor dimensions 1/4 – 10 Hp

Reducer size	Reducer stage	71C4/71D4/71E4		80F4		80G4		90H4		90I4		100J4		112L4		132M4		132N4	
		C	LB	C	LB	C	LB	C	LB	C	LB	C	LB	C	LB	C	LB	C	LB
38	2	15.67	2.37	15.82	2.11	17.19	1.74	17.29	2.62	18.17	1.74	20.13	1.75	-	-	-	-	-	-
	3	16.26	2.37	16.41	2.11	17.78	1.74	17.88	2.62	18.76	1.74	-	-	-	-	-	-	-	-
48	2	16.22	2.37	16.37	2.11	17.74	1.74	17.84	2.62	18.72	1.74	20.68	1.75	22.44	2.51	-	-	-	-
	3	16.89	2.37	17.04	2.11	18.41	1.74	18.51	2.62	19.39	1.74	21.35	1.75	-	-	-	-	-	-
58	2	16.59	2.37	16.74	2.21	18.11	1.61	18.21	2.62	19.09	1.74	20.94	1.75	22.69	2.50	24.39	6.38	25.89	6.38
	3	17.34	2.37	17.49	2.21	18.86	1.61	18.96	2.62	19.84	1.74	21.69	1.75	23.46	2.50	-	-	-	-
68	2	16.79	2.37	16.94	2.11	18.31	1.74	18.41	2.62	19.29	1.74	21.25	1.75	22.89	2.51	24.46	6.38	25.96	6.38
	3	17.52	2.37	17.67	2.11	19.04	1.74	19.14	2.62	20.02	1.74	21.98	1.75	-	-	-	-	-	-
88	2	–	–	–	–	–	–	19.56	2.62	20.44	1.74	22.30	1.75	23.95	2.51	25.47	6.38	26.97	6.38
	3	18.92	2.37	19.07	2.11	20.44	1.74	20.54	2.62	21.42	1.74	23.38	1.75	25.09	2.51	26.57	6.38	28.07	6.38
108	2	–	–	–	–	–	–	20.40	2.62	21.28	1.74	23.12	1.75	24.79	2.51	26.27	6.38	27.77	6.38
	3	–	–	20.13	2.11	21.51	1.74	21.62	2.62	22.51	1.74	24.48	1.75	26.03	2.51	27.54	6.38	29.04	6.38
128	2	–	–	–	–	–	–	–	–	–	–	24.78	1.75	26.40	2.51	27.88	6.38	29.38	6.38
	3	–	–	–	–	–	–	23.35	2.62	24.23	1.74	26.19	1.75	27.74	2.51	29.22	6.38	30.72	6.38
148	2	–	–	–	–	–	–	–	–	–	–	–	–	–	–	29.55	6.38	31.05	6.38
	3	–	–	–	–	–	–	–	–	–	–	27.98	1.75	29.60	2.51	31.04	6.38	32.54	6.38
168	2	–	–	–	–	–	–	–	–	–	–	–	–	–	–	30.94	6.38	32.44	6.38
	3	–	–	–	–	–	–	–	–	–	–	–	–	–	–	32.55	6.38	34.05	6.38

Standard integral motor dimensions 15 – 40 Hp

Reducer size	Reducer stage	160P4		160Q4		180R4		180S4		200T4	
		C	LB	C	LB	C	LB	C	LB	C	LB
88	2	29.33	7.02	29.33	7.02	–	–	–	–	–	–
	3	–	–	–	–	–	–	–	–	–	–
108	2	30.17	7.02	30.17	7.02	34.68	5.71	36.43	–	–	–
	3	31.33	7.02	–	–	–	–	–	–	–	–
128	2	31.55	7.02	31.55	7.02	36.18	5.71	37.93	–	39.43	–
	3	33.01	7.02	33.01	7.02	37.64	5.71	39.39	–	–	–
148	2	33.24	7.02	33.24	7.02	37.86	5.71	39.61	–	41.11	–
	3	34.73	7.02	34.73	7.02	39.36	5.71	41.11	–	42.61	–
168	2	34.63	7.02	34.63	7.02	39.25	5.71	41.00	–	42.50	–
	3	36.32	7.02	36.32	7.02	40.87	5.71	42.62	–	44.12	–

See page ENG–20 for additional integral gearmotor information.

Integral – washdown motor dimensions

MW_2GH_
MW_3GH_

Universal mount – solid shaft
Double and triple reduction

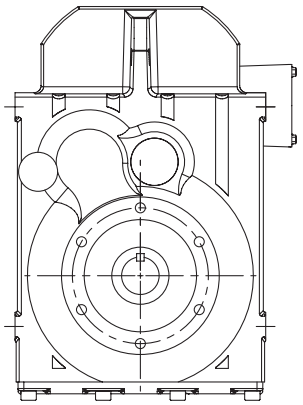

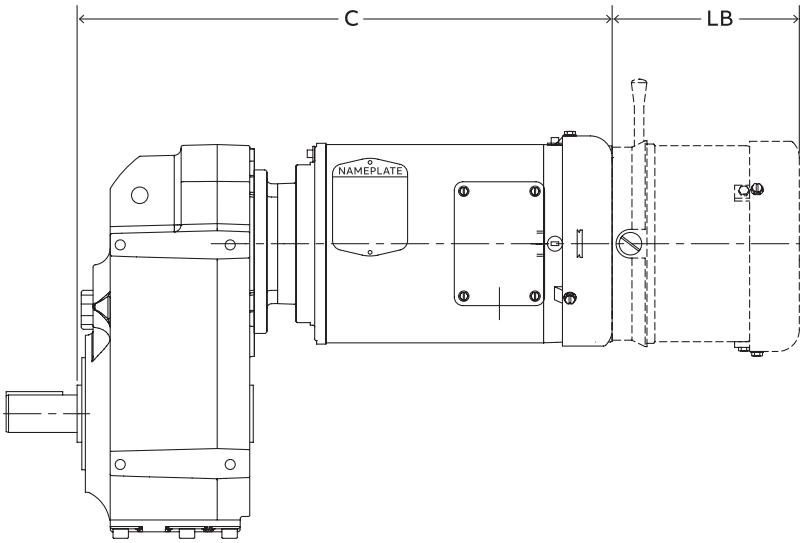

Washdown integral motor dimensions 1/2 – 10 Hp

Reducer size	Reducer stage	71E4		80F4		80G4		90H4		90I4		100J4		112L4		132M4		132N4	
		C	LB	C	LB	C	LB	C	LB	C	LB	C	LB	C	LB	C	LB	C	LB
38	2	16.29	4.81	16.19	4.81	17.19	3.81	17.29	5.26	18.17	5.26	21.52	6.24	–	–	–	–	–	–
	3	16.88	4.81	16.78	4.81	17.78	3.81	17.88	5.26	18.76	5.26	–	–	–	–	–	–	–	–
48	2	16.84	4.81	16.74	4.81	17.74	3.81	17.84	5.26	18.72	5.26	22.07	6.24	22.44	5.26	–	–	–	–
	3	17.51	4.81	17.41	4.81	18.41	3.81	18.51	5.26	19.39	5.26	22.74	6.24	–	–	–	–	–	–
68	2	17.41	4.81	17.31	4.81	18.31	3.81	18.41	5.26	19.29	5.26	22.64	6.24	22.89	5.26	24.46	8.44	25.96	8.94
	3	18.14	4.81	18.04	4.81	19.04	3.81	19.14	5.26	20.02	5.26	23.37	6.24	–	–	–	–	–	–
88	2	–	–	–	–	–	–	19.56	5.26	20.44	5.26	23.69	6.24	23.95	5.26	25.47	8.44	26.97	8.94
	3	19.54	4.81	19.44	4.81	20.44	3.81	20.54	5.26	21.42	5.26	24.77	6.24	25.09	5.26	26.57	8.44	28.07	8.94
108	2	–	–	–	–	–	–	20.40	5.26	21.28	5.26	24.51	6.24	24.79	5.26	26.27	8.44	27.77	8.94
	3	–	–	20.50	4.81	21.51	3.81	21.62	5.26	22.51	5.26	25.87	6.24	26.03	5.26	27.54	8.44	29.04	8.94
128	2	–	–	–	–	–	–	–	–	–	–	26.17	6.24	26.40	5.26	27.88	8.44	29.38	8.94
	3	–	–	–	–	–	–	23.35	5.26	24.23	5.26	27.58	6.24	27.74	5.26	29.22	8.44	30.72	8.94
148	2	–	–	–	–	–	–	–	–	–	–	–	–	–	–	29.55	8.44	31.05	8.94
	3	–	–	–	–	–	–	–	–	–	–	29.37	6.24	29.60	5.26	31.04	8.44	32.54	8.94
168	2	–	–	–	–	–	–	–	–	–	–	–	–	–	–	30.94	8.44	32.44	8.94
	3	–	–	–	–	–	–	–	–	–	–	–	–	–	–	32.55	8.44	34.05	8.94

See page ENG–20 for additional integral gearmotor information.

Output shaft dimensions

Integral – universal mount – solid shaft

Four- and five-stage reduction

MW_4GH_
MW_5GH_

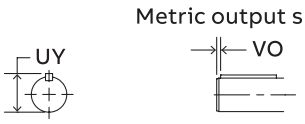

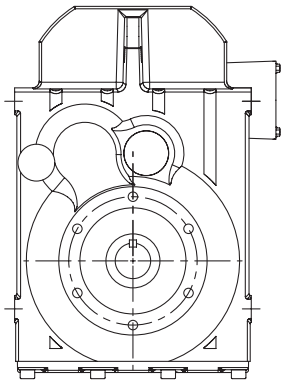

B14 Output flange

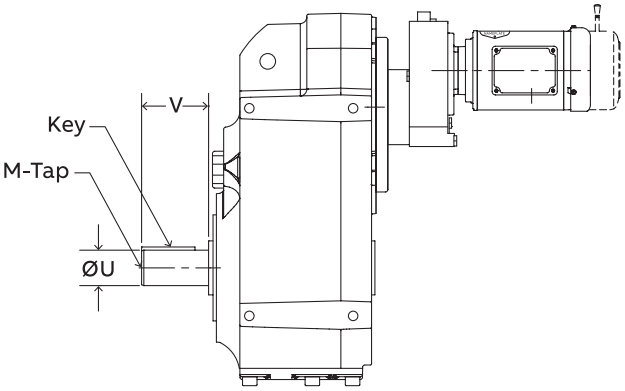

4 Stage reduction

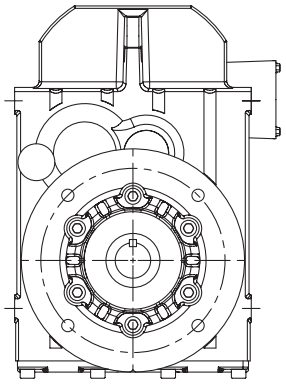

B5 Output flange

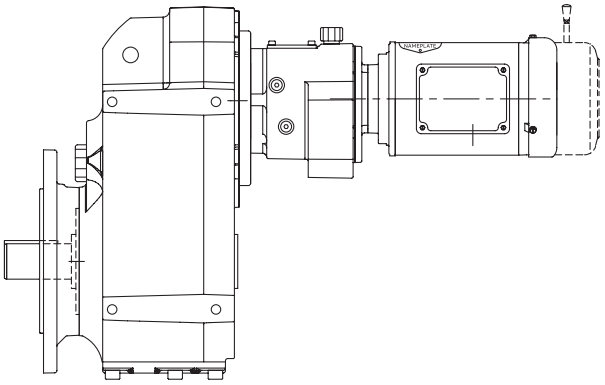

5 Stage reduction

	Standard inch output shaft						Standard metric output shaft							
	Ø U	Tol.	UY	V	Key	M–Tap	Ø U	Tol.	UY	V	Vo	EA	Key	M–Tap
68	1.625	+0.0000 –0.0010	1.80	3.15	3/8 x 3/8 x 2–5/8	5/8–11 UNC X 1.42	40	+0.018 +0.002	43	80	5	170	12 x 8 x 70	M16 x 36
88	2.000	+0.0000 –0.0010	2.22	3.94	1/2 x 1/2 x 3–1/4	3/4–10 UNC X 1.65	50	+0.030 +0.011	54	100	10	205	14 x 9 x 80	M16 x 36
108	2.375	+0.0000 –0.0010	2.65	4.72	5/8 x 5/8 x 3–11/16	3/4–10 UNC X 1.65	60	+0.030 +0.011	64	120	5	240	18 x 11 x 100	M20 x 42
128	2.875	+0.0000 –0.0010	3.21	5.51	3/4 x 3/4 x 4	3/4–10 UNC X 1.65	70	+0.035 +0.013	75	140	8	290	20 x 12 x 125	M20 x 42
148	3.625	+0.0000 –0.0010	4.01	6.69	7/8 x 7/8 x 5–1/4	1–8 UNC X 1.97	90	+0.035 +0.013	95	170	15	345	25 x 14 x 140	M24 x 50
168	4.375	+0.0000 –0.0010	4.62	8.27	1 x 1 x 6–5/8	1–8 UNC X 1.97	110	+0.035 +0.013	116	210	15	415	28 x 16 x 180	M24 x 50

See page MSM-169 for additional output shaft sizes

Gearcase dimensions

Integral – universal mount – solid shaft

Four- and five-stage reduction

MW_4GH_
MW_5GH_

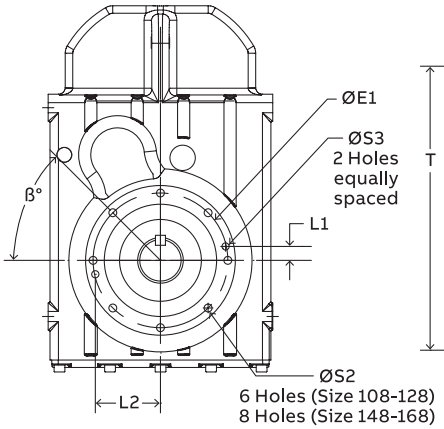

B14 Output flange
Sizes 108-168

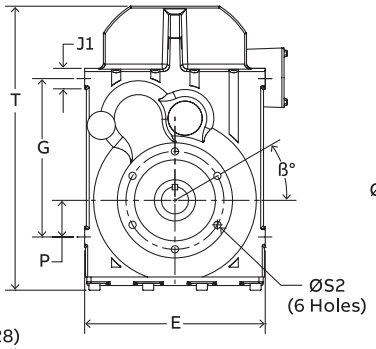

B14 Output flange
Sizes 68-88

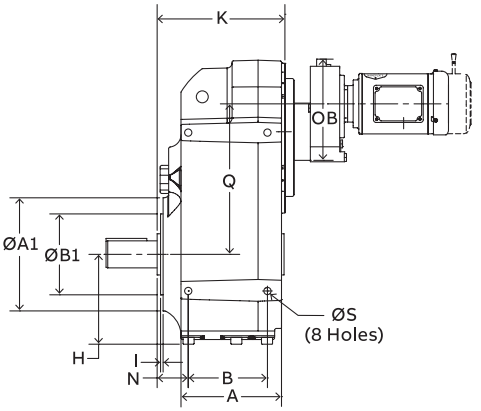

4 Stage reduction

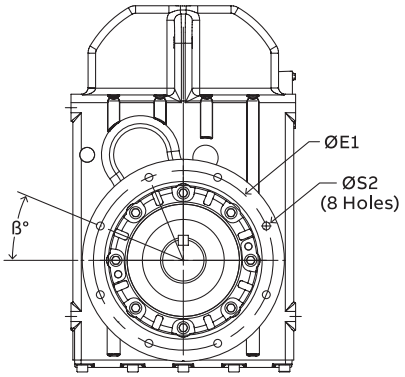

B5 Output flange
Sizes 128-168

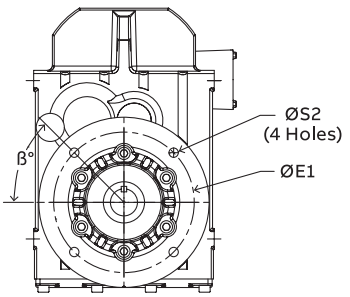

B5 Output flange
Sizes 68-108

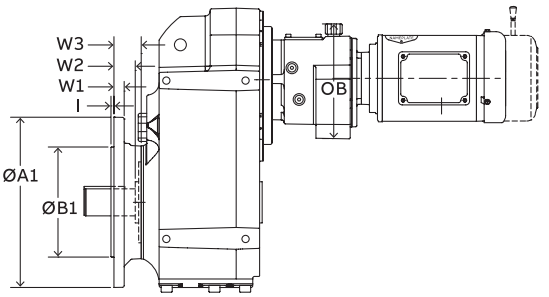

5 Stage reduction

	Mounting dimensions					Outline dimensions						4 stage		5 stage	
	B	G	H	P	Ø S	A	K	E	N	T	J1	Q	OB	Q	OB
68	4.41	9.06	5.16	2.36	M12 x 0.67	5.87	6.71	10.39	1.36	16.30	1.02	8.94	7.83	7.01	6.29
88	5.51	11.22	6.62	2.76	M16 x 0.87	7.18	8.45	13.39	1.48	20.39	1.38	11.20	9.84	8.66	8.86
108	6.50	13.78	7.33	3.94	M16 x 0.87	8.09	9.74	14.96	1.79	23.90	1.58	12.93	9.84	10.39	9.84
128	8.07	16.34	8.80	4.72	M20 x 1.06	10.45	11.7	17.72	2.46	28.47	1.97	15.53	11.57	12.46	11.57
148	8.66	18.31	10.08	4.92	M24 x 1.26	12.11	13.74	19.69	2.74	32.41	2.36	17.05	11.57	13.98	11.57
168	10.63	21.06	11.41	5.59	M30 x 1.58	14.25	15.71	23.62	3.13	36.68	2.85	19.29	11.57	16.22	11.57

	B14 mounting dimensions									B5 mounting dimensions									
	Ø A1	Ø B1	Ø E1	Ø S2	I	Ø S3	L1	L2	ß	Ø A1	Ø B1	Ø E1	Ø S2	I	W1	W2	W3	ß	
68	6.27	4.33	5.12	M12 x 0.83	0.14	–	–	–	30˚	9.84	7.086	8.47	0.53	–	0.16	0.59	0.91	1.20	30˚
88	7.48	5.118	6.50	M12 x 0.83	0.14	–	–	–	30˚	11.81	9.055	10.43	0.53	–	0.16	0.63	1.46	1.79	45˚
108	9.65	7.087	8.47	M16 x 1.10	0.16	0.47	1.10	4.06	30˚	13.78	9.842	11.81	0.69	–	0.20	0.71	1.42	1.77	45˚
128	11.69	9.055	10.43	M16 x 1.10	0.16	0.47	1.69	4.92	30˚	17.71	13.779	15.75	0.69	–	0.20	0.87	1.63	1.99	22.5˚
148	13.15	9.842	11.81	M20 x 1.34	0.20	0.63	1.22	5.71	45˚	17.72	13.779	15.75	0.69	–	0.20	0.87	1.61	2.05	22.5˚
168	16.02	11.810	13.78	M20 x 1.34	0.20	0.63	1.46	6.73	45˚	21.65	17.716	19.69	0.69	–	0.20	0.98	2.01	2.44	22.5˚

Integral – standard motor dimensions

MW_4GH_
MW_5GH_

Universal mount – solid shaft

Four- and five-stage reduction

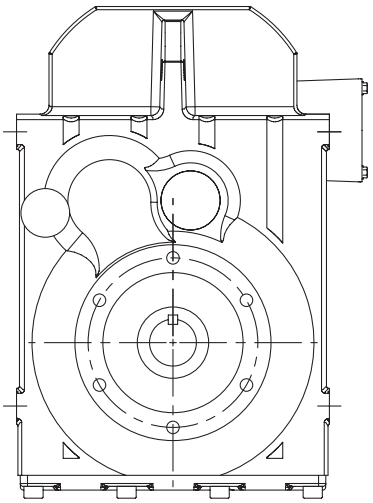

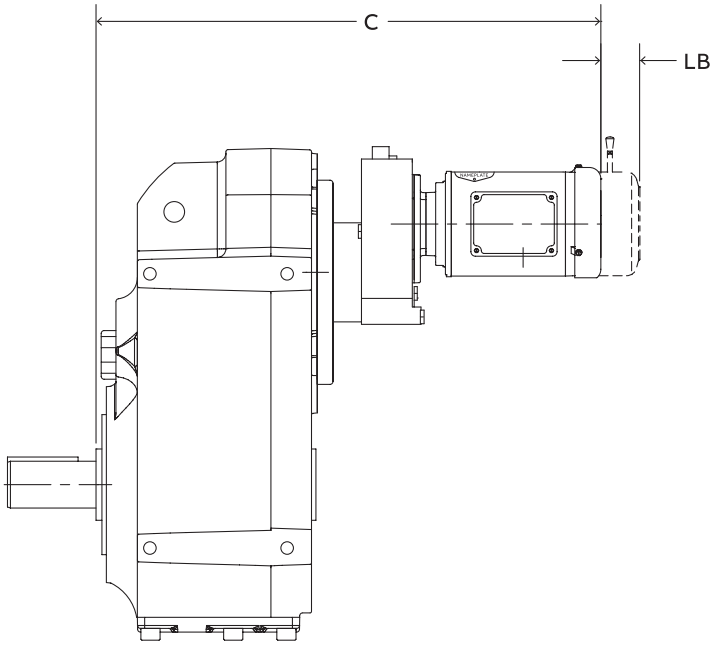

Standard integral motor dimensions 1/4 – 10 Hp

Reducer size	Reducer stage	71C4/71D4/71E4		80F4		80G4		90H4		90I4		100J4		112L4		132M4		132N4	
		C	LB	C	LB	C	LB	C	LB	C	LB	C	LB	C	LB	C	LB	C	LB
68	4	21.58	2.37	21.73	2.11	23.10	1.74	–	–	–	–	–	–	–	–	–	–	–	–
	5	22.76	2.37	–	–	–	–	–	–	–	–	–	–	–	–	–	–	–	–
88	4	23.21	2.37	23.36	2.11	24.73	1.74	24.83	2.62	–	–	–	–	–	–	–	–	–	–
	5	25.64	2.37	–	–	–	–	–	–	–	–	–	–	–	–	–	–	–	–
108	4	26.11	2.37	26.26	2.11	27.63	1.74	27.73	2.62	28.61	1.74	30.57	1.75	32.33	2.51	–	–	–	–
	5	27.07	2.37	–	–	–	–	–	–	–	–	–	–	–	–	–	–	–	–
128	4	27.41	2.37	27.56	2.11	28.93	1.74	29.03	2.62	29.91	1.74	31.87	1.75	33.51	2.51	35.08	6.38	–	–
	5	28.63	2.37	28.78	2.11	–	–	–	–	–	–	–	–	–	–	–	–	–	–
148	4	29.22	2.37	29.37	2.11	30.74	1.74	30.84	2.62	31.72	1.74	33.68	1.75	35.32	2.51	36.89	6.38	–	–
	5	31.82	2.73	31.97	2.11	33.34	1.74	–	–	–	–	–	–	–	–	–	–	–	–
168	4	31.59	2.73	31.74	2.11	33.11	1.74	33.21	2.62	34.09	1.74	36.05	1.75	37.69	2.51	39.26	6.38	–	–
	5	33.96	2.73	34.11	2.11	35.48	1.74	35.58	2.62	–	–	–	–	–	–	–	–	–	–

Integral – washdown motor dimensions

MW_4GH_
MW_5GH_

Universal mount – solid shaft

Four- and five-stage reduction

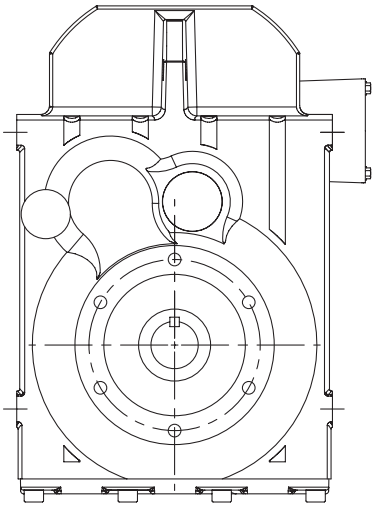

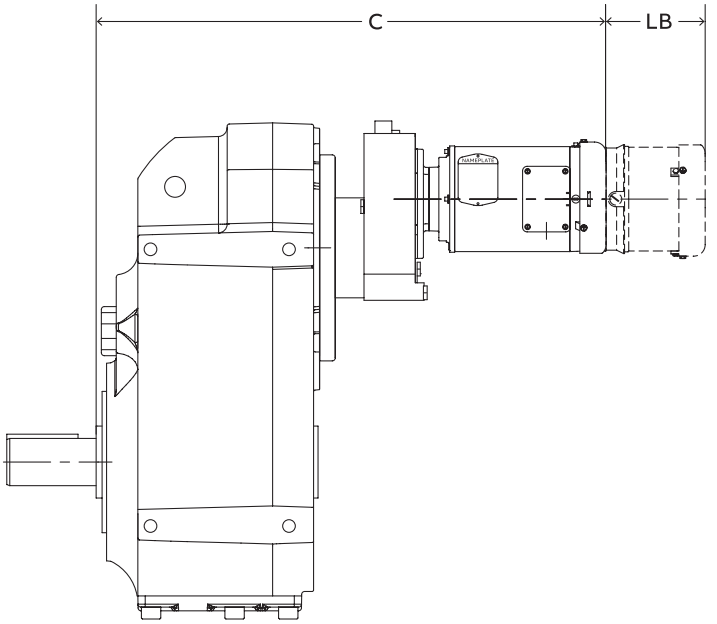

Washdown integral motor dimensions 1/2 – 10 Hp

Reducer size	Reducer stage	71E4		80F4		80G4		90H4		90I4		100J4		112L4		132M4		132N4	
		C	LB	C	LB	C	LB	C	LB	C	LB	C	LB	C	LB	C	LB	C	LB
68	4	22.20	4.81	22.10	4.81	23.10	3.81	–	–	–	–	–	–	–	–	–	–	–	–
	5	23.38	4.81	–	–	–	–	–	–	–	–	–	–	–	–	–	–	–	–
88	4	23.83	4.81	23.73	4.81	24.73	3.81	24.83	5.26	–	–	–	–	–	–	–	–	–	–
	5	26.26	4.81	–	–	–	–	–	–	–	–	–	–	–	–	–	–	–	–
108	4	26.73	4.81	26.63	4.81	27.63	3.81	27.73	5.26	28.61	5.26	31.96	6.24	32.33	5.26	–	–	–	–
	5	27.69	4.81	–	–	–	–	–	–	–	–	–	–	–	–	–	–	–	–
128	4	28.03	4.81	27.93	4.81	28.93	3.81	29.03	5.26	29.91	5.26	33.26	6.24	33.51	5.26	35.08	8.44	–	–
	5	29.25	4.81	29.15	4.81	–	–	–	–	–	–	–	–	–	–	–	–	–	–
148	4	29.84	4.81	29.74	4.81	30.74	3.81	30.84	5.26	31.72	5.26	35.07	6.24	35.32	5.26	36.89	8.44	–	–
	5	32.44	4.81	32.34	4.81	33.34	3.81	–	–	–	–	–	–	–	–	–	–	–	–
168	4	32.21	4.81	32.11	4.81	33.11	3.81	33.21	5.26	34.09	5.26	37.44	6.24	37.69	5.26	39.26	8.44	–	–
	5	34.58	4.81	34.48	4.81	35.48	3.81	35.58	5.26	–	–	–	–	–	–	–	–	–	–

Output shaft dimensions

C–face – universal mount – straight hollow bore

Double and triple reduction

MW_2C_
MW_3C_
MW_2L_
MW_3L_

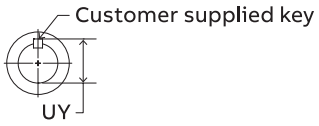

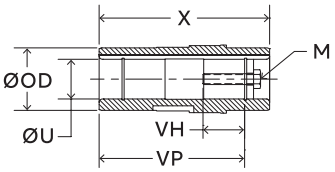

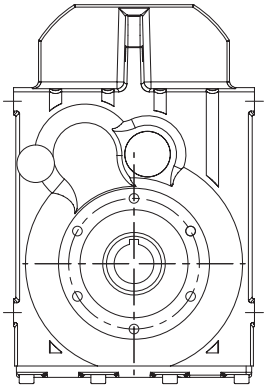

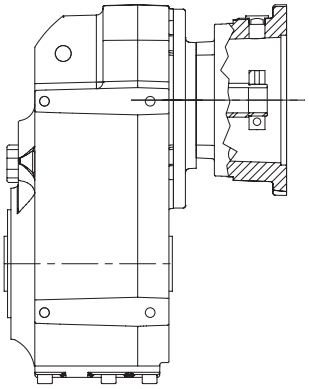

B14 Output flange

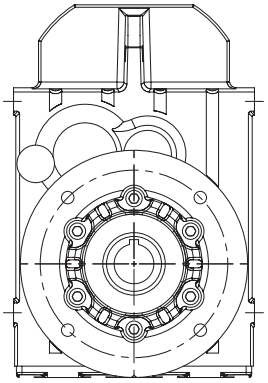

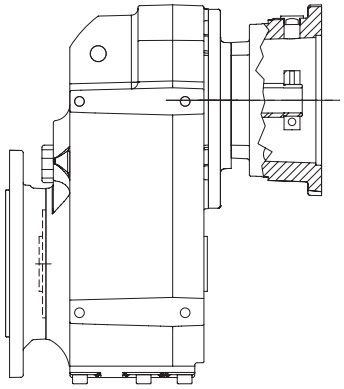

B5 Output flange

	Standard inch hollow output						Standard metric hollow output					
	Ø U	Tol.	UY	VH	Key	M–Tap	Ø U	Tol.	UY	VH	Key	M–Tap
38	1.250	+0.0010 +0.0004	1.38	1.47	1/4 x 1/4 x 1–7/8	3/8–16 X 1–3/4 UNC	30	+0.020 +0.007	33	31	8 x 7 x 40	M10 x 40
48	1.375	+0.0010 +0.0004	1.53	1.45	5/16 x 5/16 x 2–3/16	3/8–16 X 1–3/4 UNC	35	+0.025 +0.009	38	43	10 x 8 x 45	M10 x 50
58	1.500	+0.0010 +0.0004	1.68	2.05	3/8 x 3/8 x 3–1/8	5/11 x 2–1/4 UNC	40	+0.025 +0.009	43	48	12 x 8 x 50	M16 x 60
68	1.500	+0.0010 +0.0004	1.68	2.05	3/8 x 3/8 x 3–1/8	5/8–11 X 2–1/4 UNC	40	+0.025 +0.009	43	48	12 x 8 x 50	M16 x 60
88	2.000	+0.0012 +0.0004	2.23	1.89	1/2 x 1/2 x 3–15/16	3/4–10 X 2–1/4 UNC	50	+0.029 +0.010	54	48	14 x 9 x 80	M16 x 36
108	2.375	+0.0012 +0.0004	2.66	2.53	5/8 x 5/8 x 4–1/16	3/4–10 X 3 UNC	60	+0.029 +0.010	64	68	18 x 11 x 100	M20 x 80
128	2.750	+0.0012 +0.0004	3.04	2.51	5/8 x 5/8 x 6–1/8	3/4–10 X 3 UNC	70	+0.029 +0.010	75	68	20 x 12 x 110	M20 x 80
148	3.625	+0.0012 +0.0004	3.84	2.31	7/8 x 7/8 x 7–1/16	1–8 X 2–1/2 UNC	80	+0.034 +0.012	85	68	20 x 14 x 125	M20 x 85
168	4.000	+0.0014 +0.0005	4.45	2.29	1 x 1 x 5–7/8	1–8 X 2–1/2 UNC	100	+0.034 +0.012	106	77	28 x 16 x 180	M24 x 95

See page MSM-170 for additional hollow bore sizes

Gearcase dimensions

C–face – universal mount – straight hollow bore

Double and triple reduction

MW_2C_
MW_3C_
MW_2L_
MW_3L_

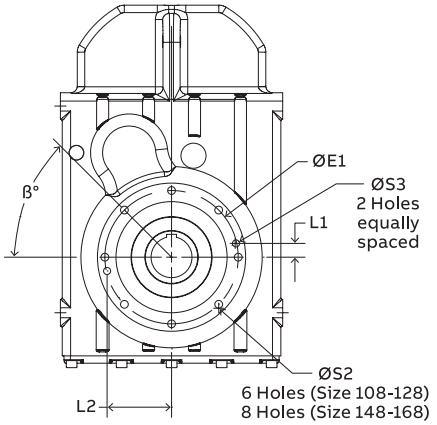

B14 Output flange
Sizes 108-168

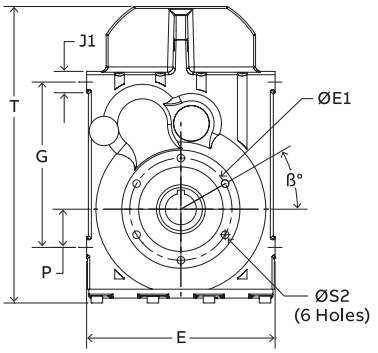

B14 Output flange
Sizes 38-88

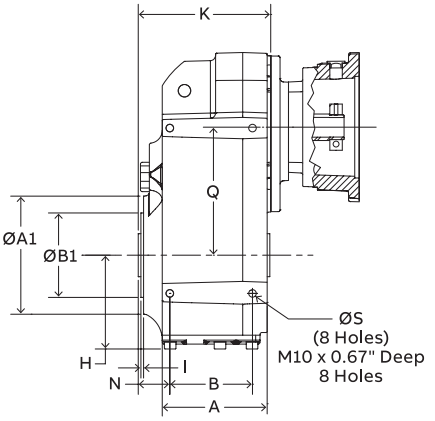

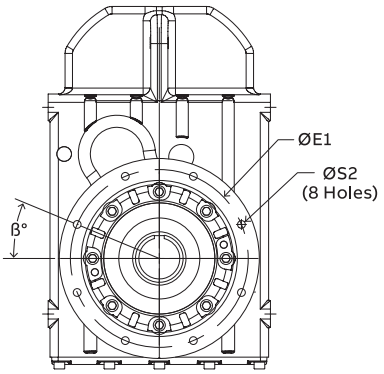

B5 Output flange
Sizes 128-168

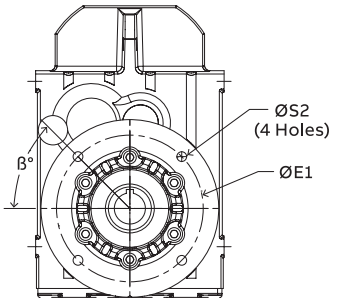

B5 Output flange
Sizes 38-108

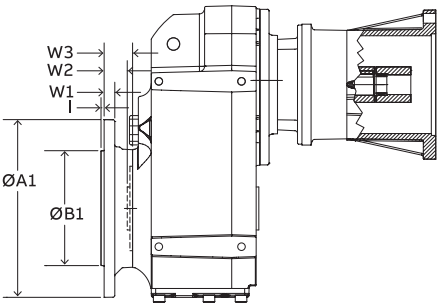

	Mounting dimensions					Outline dimensions									
	B	G	H	P	Ø S	A	K	E	N	Q	T	J1	X	VP	OD
38	3.03	5.83	3.77	1.22	M8 x 0.43	3.96	5.14	7.09	0.97	4.80	11.17	0.91	4.72	4.02	1.77
48	3.66	7.32	4.30	1.69	M10 x 0.52	4.64	5.91	8.35	1.44	5.91	13.28	0.95	5.91	5.04	2.14
58	4.02	8.15	4.67	2.13	M10 x 0.67	5.30	6.61	9.40	1.70	6.34	14.73	1.06	6.54	5.59	2.17
68	4.41	9.06	5.16	2.36	M12 x 0.67	5.87	6.71	10.39	1.36	7.01	16.30	1.02	7.09	5.91	2.56
88	5.51	11.22	6.62	2.76	M16 x 0.87	7.18	8.45	13.39	1.48	8.66	20.39	1.38	8.27	7.09	3.15
108	6.50	13.78	7.33	3.94	M16 x 0.87	8.09	9.74	14.96	1.79	10.39	23.90	1.58	9.45	8.19	3.74
128	8.07	16.34	8.80	4.72	M20 x 1.06	10.45	11.7	17.72	2.46	12.46	28.47	1.97	11.81	10.35	4.33
148	8.66	18.31	10.08	4.92	M24 x 1.26	12.11	13.74	19.69	2.74	13.98	32.41	2.36	13.78	12.21	4.72
168	10.63	21.06	11.41	5.59	M30 x 1.58	14.25	15.71	23.62	3.13	16.22	36.68	2.85	16.14	14.41	5.91

	B14 mounting dimensions									B5 mounting dimensions								
	Ø A1	Ø B1	Ø E1	Ø S2	I	Ø S3	L1	L2	ß	Ø A1	Ø B1	Ø E1	Ø S2	I	W1	W2	W3	ß
38	4.75	3.149	3.94	M8 x 0.63	0.12	–	–	–	30˚	6.30	4.331	5.12	0.35	0.14	0.39	0.95	1.18	30˚
48	5.20	3.470	4.53	M10 x 0.67	0.12	–	–	–	30˚	7.87	5.118	6.50	0.43	0.14	0.47	0.98	1.26	30˚
58	5.91	4.3308	5.12	M12 x 0.83	0.16	–	–	–	30˚	9.84	7.0867	8.47	0.53	0.16	0.59	0.91	1.20	45˚
68	6.27	4.33	5.12	M12 x 0.83	0.14	–	–	–	30˚	9.84	7.086	8.47	0.53	0.16	0.59	0.91	1.20	30˚
88	7.48	5.118	6.50	M12 x 0.83	0.14	–	–	–	30˚	11.81	9.055	10.43	0.53	0.16	0.63	1.46	1.79	45˚
108	9.65	7.087	8.47	M16 x 1.10	0.16	0.47	1.10	4.06	30˚	13.78	9.842	11.81	0.69	0.20	0.71	1.42	1.77	45˚
128	11.69	9.055	10.43	M16 x 1.10	0.16	0.47	1.69	4.92	30˚	17.71	13.779	15.75	0.69	0.20	0.87	1.63	1.99	22.5˚
148	13.15	9.842	11.81	M20 x 1.34	0.20	0.63	1.22	5.71	45˚	17.72	13.779	15.75	0.69	0.20	0.87	1.61	2.05	22.5˚
168	16.02	11.810	13.78	M20 x 1.34	0.20	0.63	1.46	6.73	45˚	21.65	17.716	19.69	0.69	0.20	0.98	2.01	2.44	22.5˚

Clamp collar – NEMA/IEC dimensions

C–face – universal mount – straight hollow bore

Double and triple reduction

MW_2CN_
MW_3CN_
MW_2CI_
MW_3CI_

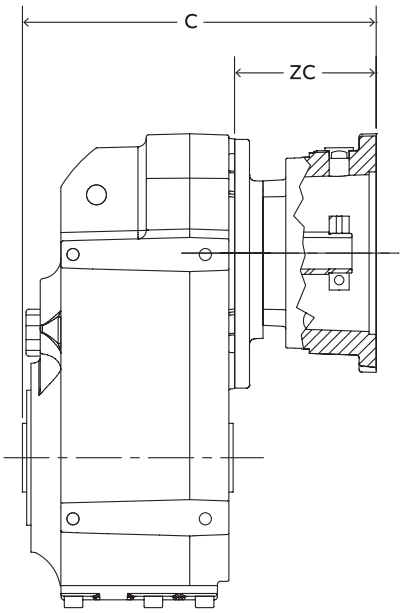

NEMA clamp collar motor dimensions

Reducer size	Reducer stage	56C		140TC		180TC		210TC		250TC		280TC		320TC		360TC	
		C	ZC	C	ZC	C	ZC	C	ZC	C	ZC	C	ZC	C	ZC	C	ZC
38	2	8.60	3.46	9.27	4.13	9.59	4.45	–	–	–	–	–	–	–	–	–	–
	3	9.19	4.06	9.86	4.72	–	–	–	–	–	–	–	–	–	–	–	–
48	2	9.15	3.25	9.82	3.92	11.40	5.49	11.28	5.33	–	–	–	–	–	–	–	–
	3	9.82	3.92	10.49	4.59	12.07	6.16	–	–	–	–	–	–	–	–	–	–
58	2	9.52	2.91	10.19	3.58	11.41	4.80	13.71	7.10	–	–	–	–	–	–	–	–
	3	10.27	3.66	10.94	4.33	12.18	5.57	–	–	–	–	–	–	–	–	–	–
68	2	9.72	3.01	10.39	3.68	11.89	5.18	13.78	7.07	12.88	6.13	–	–	–	–	–	–
	3	10.45	3.74	11.12	4.41	12.69	5.98	–	–	–	–	–	–	–	–	–	–
88	2	–	–	11.54	3.09	12.90	4.45	14.79	6.34	14.73	6.28	17.79	6.88	–	–	–	–
	3	11.86	3.41	12.52	4.08	14.04	5.59	15.89	7.44	–	–	–	–	–	–	–	–
108	2	–	–	12.38	2.64	13.74	4.00	15.59	5.85	15.56	5.82	16.36	6.62	17.79	8.01	–	–
	3	–	–	13.58	3.84	14.98	5.24	16.87	7.13	16.72	6.98	–	–	–	–	–	–
128	2	–	–	–	–	15.35	3.58	16.98	5.21	16.93	5.16	17.86	6.09	19.49	7.72	21.26	9.41
	3	–	–	15.33	3.56	16.69	4.82	18.32	6.55	18.39	6.62	19.32	7.54	–	–	–	–
148	2	–	–	–	–	–	–	18.64	4.90	18.61	4.87	19.53	5.79	21.14	7.40	22.65	8.91
	3	–	–	–	–	18.54	4.80	20.13	6.39	20.10	6.36	20.03	7.29	22.66	8.92	–	–
168	2	–	–	–	–	–	–	20.04	4.33	20.00	4.30	20.93	5.22	22.56	6.85	24.05	8.34
	3	–	–	–	–	–	–	21.65	5.94	21.71	6.00	22.54	6.84	24.17	8.47	25.67	9.96

IEC clamp collar motor dimensions

Reducer size	Reducer stage	71D		80D		90D		100D		112D		132D		160D		180D		200D	
		C	ZC	C	ZC	C	ZC	C	ZC	C	ZC	C	ZC	C	ZC	C	ZC	C	ZC
38	2	7.89	2.76	8.84	3.70	8.84	3.70	9.13	4.00	–	–	–	–	–	–	–	–	–	–
	3	8.48	3.35	9.43	4.29	9.43	4.29	–	–	–	–	–	–	–	–	–	–	–	–
48	2	8.44	2.54	9.39	3.48	9.39	3.48	9.69	3.78	10.02	4.11	–	–	–	–	–	–	–	–
	3	9.11	3.21	10.06	4.15	10.06	4.15	10.35	4.45	–	–	–	–	–	–	–	–	–	–
58	2	8.81	2.20	9.76	3.15	9.76	3.15	10.05	3.44	10.25	3.64	12.06	5.45	–	–	–	–	–	–
	3	9.56	2.95	10.51	3.90	10.51	3.90	10.80	4.19	11.02	4.41	–	–	–	–	–	–	–	–
68	2	9.02	2.30	9.96	3.25	9.96	3.25	10.26	3.54	10.51	3.80	12.13	5.41	–	–	–	–	–	–
	3	9.74	3.03	10.69	3.98	10.69	3.98	10.98	4.27	–	–	–	–	–	–	–	–	–	–
88	2	–	–	–	–	11.11	2.66	11.30	2.85	11.52	3.07	13.14	4.69	14.83	6.38	–	–	–	–
	3	11.15	2.70	12.09	3.64	12.09	3.64	12.39	3.94	12.66	4.21	14.24	5.79	–	–	–	–	–	–
108	2	–	–	–	–	11.95	2.20	12.13	2.38	12.36	2.62	13.94	4.19	15.67	5.93	16.20	6.46	16.95	6.85
	3	–	–	13.15	3.41	13.15	3.41	13.44	3.70	13.60	3.86	15.22	5.47	16.83	7.09	–	–	–	–
128	2	–	–	–	–	–	–	13.78	2.01	13.98	2.21	15.55	3.78	17.05	5.28	17.70	5.93	18.09	6.32
	3	–	–	–	–	14.90	3.13	15.20	3.43	15.31	3.54	16.89	5.12	18.50	6.73	19.15	7.38	19.55	7.78
148	2	–	–	–	–	–	–	–	–	–	–	17.20	3.46	18.72	4.98	19.37	5.63	19.76	6.02
	3	–	–	–	–	–	–	16.97	3.23	17.17	3.43	18.70	4.96	20.22	6.48	20.87	7.13	21.26	7.52
168	2	–	–	–	–	–	–	–	–	–	–	18.60	2.89	20.12	4.41	20.77	5.06	21.16	5.45
	3	–	–	–	–	–	–	–	–	–	–	20.22	4.51	21.73	6.02	22.38	6.67	22.78	7.07

Three-piece coupled – NEMA/IEC dimensions

C–face – universal mount – straight hollow bore

Double and triple reduction

MW_2LN_
MW_3LN_
MW_2LI_
MW_3LI_

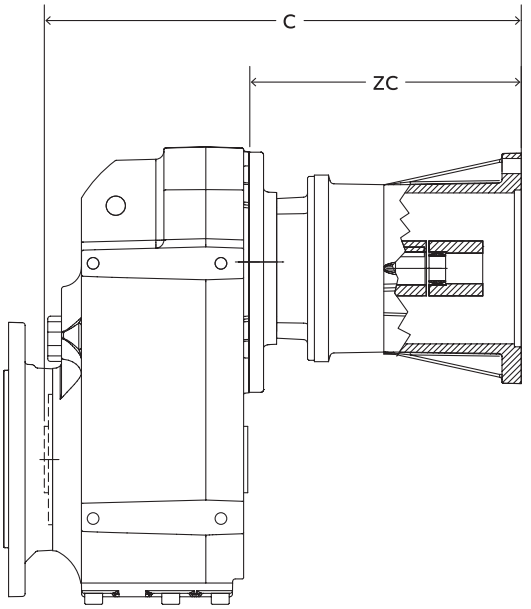

NEMA Three-piece coupled motor dimensions

Reducer size	Reducer stage	56C		140TC		180TC		210TC		250TC		280TC		320TC		360TC	
		C	ZC	C	ZC	C	ZC	C	ZC	C	ZC	C	ZC	C	ZC	C	ZC
38	2	11.73	6.59	13.15	8.01	14.43	9.29	–	–	–	–	–	–	–	–	–	–
	3	12.32	7.19	13.74	8.60	–	–	–	–	–	–	–	–	–	–	–	–
48	2	12.28	6.38	13.70	7.80	14.99	9.08	–	–	–	–	–	–	–	–	–	–
	3	12.95	7.05	14.37	8.46	16.65	9.74	–	–	–	–	–	–	–	–	–	–
58	2	13.11	6.50	14.07	7.46	15.21	8.60	17.55	10.94	–	–	–	–	–	–	–	–
	3	13.40	6.79	14.82	8.21	15.98	9.37	–	–	–	–	–	–	–	–	–	–
68	2	12.85	6.14	14.27	7.56	15.47	8.76	17.40	10.69	–	–	–	–	–	–	–	–
	3	13.58	6.87	15.00	8.29	16.28	9.57	–	–	–	–	–	–	–	–	–	–
88	2	–	–	15.42	6.97	16.48	8.03	18.41	9.96	20.38	11.93	–	–	–	–	–	–
	3	14.99	6.54	16.40	7.95	17.62	9.17	19.51	11.06	–	–	–	–	–	–	–	–
108	2	–	–	16.26	6.52	17.32	7.58	19.21	9.47	21.22	11.48	23.91	14.17	–	–	–	–
	3	–	–	17.46	7.72	18.56	8.85	20.49	10.75	22.38	12.64	–	–	–	–	–	–
128	2	–	–	–	–	18.85	7.08	20.82	9.05	22.60	10.82	25.41	13.64	27.91	16.14	–	–
	3	–	–	19.21	7.44	20.27	8.50	22.16	10.39	24.05	12.28	26.87	15.10	–	–	–	–
148	2	–	–	–	–	–	–	22.48	8.74	24.27	10.53	27.08	13.34	29.56	15.82	30.63	16.89
	3	–	–	–	–	22.13	8.39	23.97	10.23	25.76	12.02	28.58	14.84	31.08	17.34	–	–
168	2	–	–	–	–	–	–	23.87	8.17	25.67	9.96	28.48	12.77	30.98	15.27	32.02	16.32
	3	–	–	–	–	–	–	25.49	9.79	27.36	11.65	30.10	14.39	32.60	16.89	33.64	17.93

IEC Three-piece coupled motor dimensions

Reducer size	Reducer stage	71D		80D		90D		100D		112D		132D		160D		180D		200D		225D		250D	
		C	ZC	C	ZC	C	ZC	C	ZC	C	ZC	C	ZC	C	ZC	C	ZC	C	ZC	C	ZC	C	ZC
38	2	–	–	13.07	7.93	13.07	7.93	13.96	8.82	–	–	–	–	–	–	–	–	–	–	–	–	–	–
	3	–	–	13.66	8.52	13.66	8.52	–	–	–	–	–	–	–	–	–	–	–	–	–	–	–	–
48	2	–	–	13.62	7.72	13.62	7.72	14.51	8.60	14.47	8.56	–	–	–	–	–	–	–	–	–	–	–	–
	3	–	–	14.29	8.39	14.29	8.39	15.18	9.27	–	–	–	–	–	–	–	–	–	–	–	–	–	–
58	2	–	–	13.99	7.38	13.99	7.38	14.88	8.27	14.70	8.09	17.31	10.70	–	–	–	–	–	–	–	–	–	–
	3	–	–	14.74	8.13	14.74	8.13	15.63	9.02	15.47	8.86	–	–	–	–	–	–	–	–	–	–	–	–
68	2	–	–	14.19	7.48	14.19	7.48	15.08	8.37	14.96	8.25	17.38	10.67	–	–	–	–	–	–	–	–	–	–
	3	–	–	14.92	8.21	14.92	8.21	15.81	9.09	–	–	–	–	–	–	–	–	–	–	–	–	–	–
88	2	–	–	–	–	15.34	6.89	16.13	7.68	15.97	7.52	18.39	9.94	21.01	12.56	–	–	–	–	–	–	–	–
	3	–	–	16.32	7.87	16.32	7.87	17.21	8.76	17.11	8.66	19.49	11.04	–	–	–	–	–	–	–	–	–	–
108	2	–	–	–	–	16.18	6.44	16.95	7.20	16.81	7.07	19.19	9.45	21.85	12.11	23.84	14.09	23.88	14.13	–	–	–	–
	3	–	–	17.38	7.64	17.38	7.64	18.27	8.52	18.05	8.31	20.47	10.73	23.01	13.27	–	–	–	–	–	–	–	–
128	2	–	–	–	–	–	–	18.60	6.83	18.43	6.65	20.81	9.04	23.23	11.46	25.33	13.56	25.37	13.60	28.66	16.89	–	–
	3	–	–	–	–	19.13	7.36	20.02	8.25	19.76	7.99	22.15	10.37	24.69	12.91	26.79	15.02	26.83	15.06	–	–	–	–
148	2	–	–	–	–	–	–	–	–	–	–	22.46	8.72	24.90	11.16	27.00	13.27	27.05	13.31	30.33	16.59	30.51	16.77
	3	–	–	–	–	–	–	21.79	8.05	21.61	7.87	23.96	10.22	26.40	12.66	28.50	14.76	28.54	14.80	31.83	18.09	–	–
168	2	–	–	–	–	–	–	–	–	–	–	23.86	8.15	26.30	10.59	28.41	12.70	28.44	12.74	31.73	16.02	31.91	16.20
	3	–	–	–	–	–	–	–	–	–	–	25.47	9.76	27.91	12.20	30.02	14.31	30.06	14.35	33.35	17.64	33.52	17.91

Output shaft dimensions

C–face – universal mount – straight hollow bore

Four- and five-stage reduction

MW_4C_
MW_5C_
MW_4L_
MW_5L_

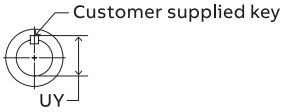

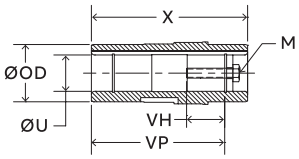

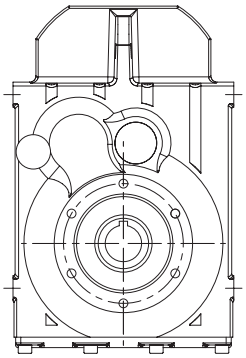

B14 Output flange

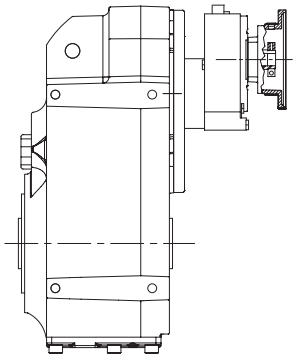

4 Stage reduction

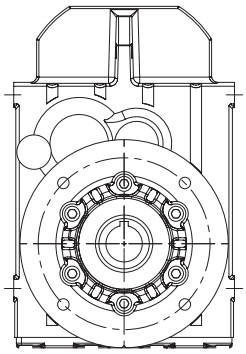

B5 Output flange

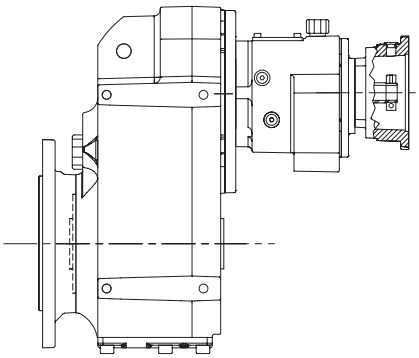

5 Stage reduction

	Standard inch hollow output						Standard metric hollow output					
	Ø U	Tol.	UY	VH	Key	M–Tap	Ø U	Tol.	UY	VH	Key	M–Tap
68	1.500	+0.0010 +0.0004	1.68	2.05	3/8 x 3/8 x 3–1/8	5/8–11 X 2–1/4 UNC	40	+0.025 +0.009	43	48	12 x 8 x 50	M16 x 60
88	2.000	+0.0012 +0.0004	2.23	1.89	1/2 x 1/2 x 3–15/16	3/4–10 X 2–1/4 UNC	50	+0.029 +0.010	54	48	14 x 9 x 80	M16 x 36
108	2.375	+0.0012 +0.0004	2.66	2.53	5/8 x 5/8 x 4–1/16	3/4–10 X 3 UNC	60	+0.029 +0.010	64	68	18 x 11 x 100	M20 x 80
128	2.750	+0.0012 +0.0004	3.04	2.51	5/8 x 5/8 x 6–1/8	3/4–10 X 3 UNC	70	+0.029 +0.010	75	68	20 x 12 x 110	M20 x 80
148	3.625	+0.0012 +0.0004	3.84	2.31	7/8 x 7/8 x 7–1/16	1–8 X 2–1/2 UNC	80	+0.034 +0.012	95	68	20 x 14 x 125	M20 x 85
168	4.000	+0.0014 +0.0005	4.45	2.29	1 x 1 x 5–7/8	1–8 X 2–1/2 UNC	100	+0.034 +0.012	106	77	28 x 16 x 180	M24 x 95

See page MSM-170 for additional hollow bore sizes

Gearcase dimensions

C–face – universal mount – straight hollow bore

Four- and five-stage reduction

MW_4C_
MW_5C_
MW_4L_
MW_5L_

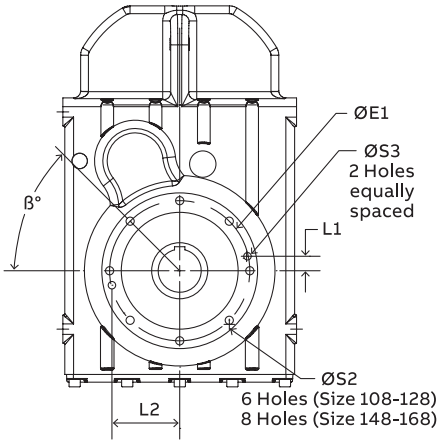

B14 Output flange
Sizes 108-168

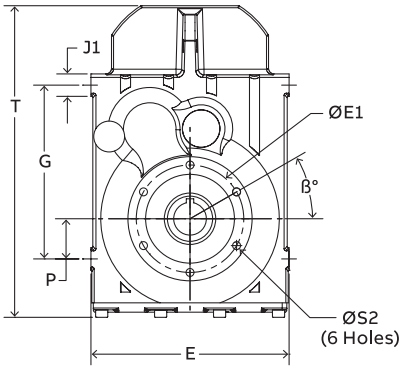

B14 Output flange
Sizes 68-88

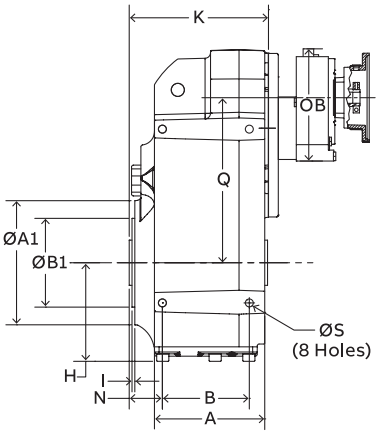

4 Stage reduction

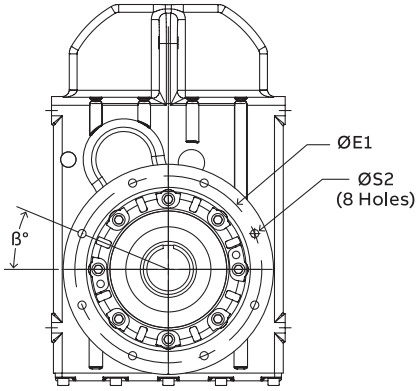

B5 Output flange
Sizes 128-168

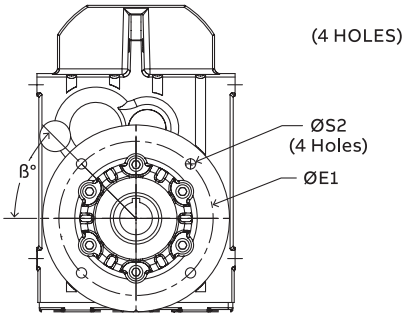

B5 Output flange
Sizes 68-108

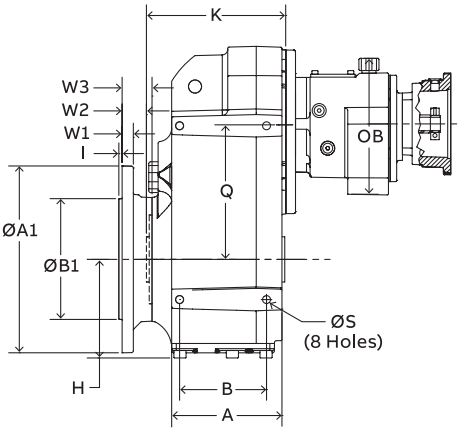

5 Stage reduction

	Mounting dimensions					Outline dimensions									4 stage		5 stage	
	B	G	H	P	Ø S	A	K	E	N	T	J1	X	VP	OD	Q	OB	Q	OB
68	4.41	9.06	5.16	2.36	M12 x 0.67	5.87	6.71	10.39	1.36	16.30	1.02	7.09	5.91	2.56	8.94	7.83	7.01	6.29
88	5.51	11.22	6.62	2.76	M16 x 0.87	7.18	8.45	13.39	1.48	20.39	1.38	8.27	7.09	3.15	11.20	9.84	8.66	8.86
108	6.50	13.78	7.33	3.94	M16 x 0.87	8.09	9.74	14.96	1.79	23.90	1.58	9.45	8.19	3.74	12.93	9.84	10.39	9.84
128	8.07	16.34	8.80	4.72	M20 x 1.06	10.45	11.7	17.72	2.46	28.47	1.97	11.81	10.35	4.33	15.53	11.57	12.46	11.57
148	8.66	18.31	10.08	4.92	M24 x 1.26	12.11	13.74	19.69	2.74	32.41	2.36	13.78	12.21	4.72	17.05	11.57	13.98	11.57
168	10.63	21.06	11.41	5.59	M30 x 1.58	14.25	15.71	23.62	3.13	36.68	2.85	16.14	14.41	5.91	19.29	11.57	16.22	11.57

	B14 mounting dimensions									B5 mounting dimensions								
	Ø A1	Ø B1	Ø E1	Ø S2	I	Ø S3	L1	L2	ß	Ø A1	Ø B1	Ø E1	Ø S2	I	W1	W2	W3	ß
68	6.27	4.33	5.12	M12 x 0.83	0.14	–	–	–	30˚	9.84	7.086	8.47	0.53	0.16	0.59	0.91	1.20	30˚
88	7.48	5.118	6.50	M12 x 0.83	0.14	–	–	–	30˚	11.81	9.055	10.43	0.53	0.16	0.63	1.46	1.79	45˚
108	9.65	7.087	8.47	M16 x 1.10	0.16	0.47	1.10	4.06	30˚	13.78	9.842	11.81	0.69	0.20	0.71	1.42	1.77	45˚
128	11.69	9.055	10.43	M16 x 1.10	0.16	0.47	1.69	4.92	30˚	17.71	13.779	15.75	0.69	0.20	0.87	1.63	1.99	22.5˚
148	13.15	9.842	11.81	M20 x 1.34	0.20	0.63	1.22	5.71	45˚	17.72	13.779	15.75	0.69	0.20	0.87	1.61	2.05	22.5˚
168	16.02	11.810	13.78	M20 x 1.34	0.20	0.63	1.46	6.73	45˚	21.65	17.716	19.69	0.69	0.20	0.98	2.01	2.44	22.5˚

Clamp collar – NEMA/IEC dimensions

C–face – universal mount – straight hollow bore

Four- and five-stage reduction

MW_4CN_
MW_5CN_
MW_4CI_
MW_5CI_

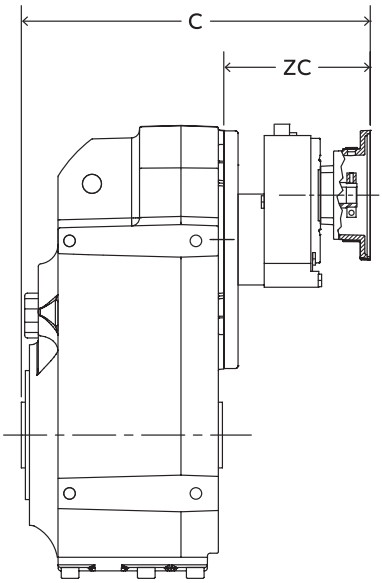

4 Stage reduction

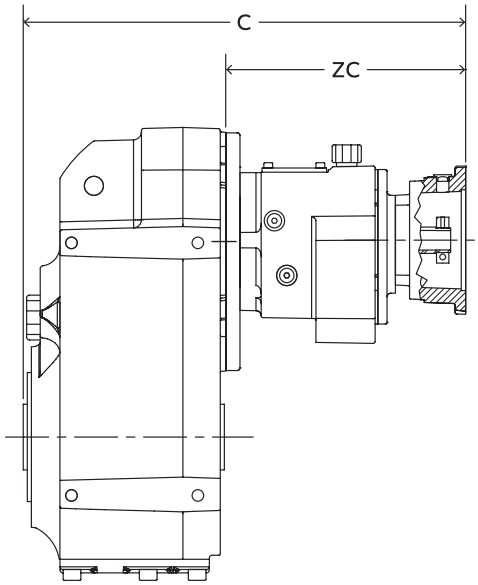

5 Stage reduction

NEMA clamp collar motor dimensions

Reducer size	Reducer stage	56C		140TC		180TC		210TC	
		C	ZC	C	ZC	C	ZC	C	ZC
68	4	14.71	8.00	15.41	8.70	15.71	9.00	–	–
	5	15.86	9.15	16.53	9.82	16.86	10.15	–	–
88	4	16.27	7.82	16.87	8.42	18.47	10.02	–	–
	5	18.61	10.16	19.28	10.83	20.85	12.40	–	–
108	4	17.88	8.14	18.48	8.74	20.08	10.34	–	–
	5	19.75	10.01	20.42	10.68	21.99	12.25	–	–
128	4	20.33	8.56	21.03	9.26	22.53	10.76	24.43	12.66
	5	21.57	9.80	22.24	10.47	23.81	12.04	–	–
148	4	22.15	8.41	22.85	9.11	24.35	10.61	26.25	12.51
	5	23.38	9.64	24.05	10.31	25.62	11.88	–	–
168	4	24.73	9.02	25.43	9.72	26.93	11.22	28.83	13.12
	5	27.10	11.39	27.77	12.06	29.27	13.56	31.19	15.48

IEC clamp collar motor dimensions

Reducer size	Reducer stage	71D		80D		90D		100D		112D		132D	
		C	ZC	C	ZC	C	ZC	C	ZC	C	ZC	C	ZC
68	4	14.01	7.30	14.91	8.20	14.91	8.20	15.21	8.50	–	–	–	–
	5	15.15	8.44	16.09	9.38	16.09	9.38	16.39	9.68	–	–	–	–
88	4	15.57	7.12	16.47	8.02	16.47	8.02	16.77	8.32	17.07	8.62	–	–
	5	17.90	9.45	18.85	10.40	18.85	10.40	19.14	10.69	19.48	11.03	–	–
108	4	17.18	7.44	18.08	8.34	18.08	8.34	18.38	8.64	18.68	8.94	–	–
	5	19.04	9.30	19.99	10.25	19.99	10.25	20.28	10.54	20.62	10.88	–	–
128	4	19.63	7.86	20.63	8.86	20.63	8.86	20.93	9.16	21.13	9.36	22.73	10.96
	5	20.86	9.09	21.81	10.04	21.81	10.04	22.10	10.33	22.44	10.67	–	–
148	4	21.45	7.71	22.45	8.71	22.45	8.71	22.75	9.01	22.95	9.21	24.55	10.81
	5	22.67	8.93	23.62	9.88	23.62	9.88	23.91	10.17	24.25	10.51	–	–
168	4	24.03	8.32	25.03	9.32	25.03	9.32	25.33	9.62	25.53	9.82	27.13	11.42
	5	26.39	10.68	27.34	11.63	27.34	11.63	27.63	11.92	27.89	12.18	29.50	13.79

Three-piece coupled – NEMA/IEC dimensions

C–face – universal mount – straight hollow bore

Four- and five-stage reduction

MW_4LN_
MW_5LN_
MW_4LI_
MW_5LI_

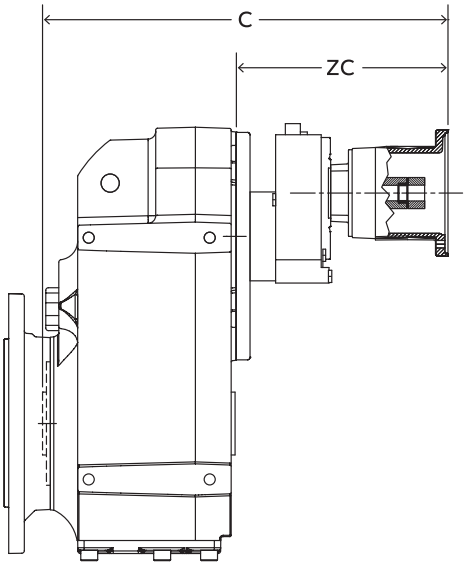

4 Stage reduction

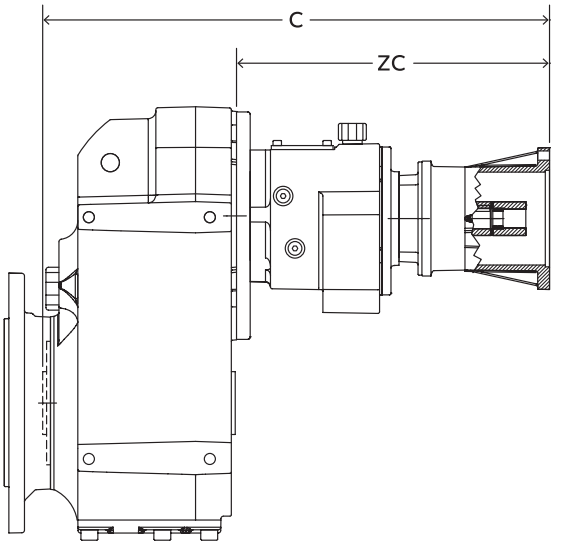

5 Stage reduction

NEMA Three-piece coupled motor dimensions

Reducer size	Reducer stage	56C		140TC		180TC		210TC	
		C	ZC	C	ZC	C	ZC	C	ZC
68	4	17.81	11.10	19.21	12.50	–	–	–	–
	5	18.99	12.28	20.40	13.69	–	–	–	–
88	4	19.37	10.92	20.77	12.32	22.07	13.62	–	–
	5	21.74	13.29	23.16	14.71	24.44	15.99	–	–
108	4	20.98	11.24	22.38	12.64	23.68	13.94	–	–
	5	22.88	13.14	24.30	14.56	25.58	15.84	–	–
128	4	23.53	11.76	24.93	13.16	26.13	14.36	28.03	16.26
	5	24.70	12.93	26.12	14.35	27.40	15.63	–	–
148	4	25.35	11.61	26.75	13.01	27.95	14.21	29.85	16.11
	5	26.51	12.77	27.93	14.19	29.21	15.47	–	–
168	4	27.93	12.22	29.33	13.62	30.53	14.82	32.43	16.72
	5	30.23	14.52	31.65	15.94	32.85	17.14	35.00	19.29

IEC Three-piece coupled motor dimensions

Reducer size	Reducer stage	71D		80D		90D		100D		112D		132D	
		C	ZC	C	ZC	C	ZC	C	ZC	C	ZC	C	ZC
68	4	–	–	19.21	12.50	19.21	12.50	20.01	13.30	–	–	–	–
	5	–	–	20.32	13.61	20.32	13.61	21.21	14.50	–	–	–	–
88	4	–	–	20.67	12.22	20.67	12.22	21.57	13.12	21.57	13.12	–	–
	5	–	–	23.08	14.63	23.08	14.63	23.96	15.51	23.92	15.47	–	–
108	4	–	–	22.28	12.54	22.28	12.54	23.18	13.44	23.18	13.44	–	–
	5	–	–	24.22	14.48	24.22	14.48	25.10	15.36	25.06	15.32	–	–
128	4	–	–	–	–	24.83	13.06	25.73	13.96	25.63	13.86	28.03	16.26
	5	–	–	26.04	14.27	26.04	14.27	26.92	15.15	26.88	15.11	–	–
148	4	–	–	–	–	26.65	12.91	27.55	13.81	27.45	13.71	29.85	16.11
	5	–	–	27.85	14.11	27.85	14.11	28.73	14.99	28.69	14.95	–	–
168	4	–	–	–	–	29.23	13.52	30.13	14.42	30.03	14.32	32.43	16.72
	5	–	–	31.57	15.86	31.57	15.86	32.46	16.75	32.34	16.63	34.76	19.05

Output shaft dimensions

Separate – universal mount – straight hollow bore
Double and triple reduction

MW_2SI_
MW_2SM_
MW_3SI_
MW_3SM_

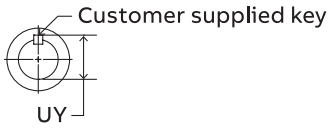

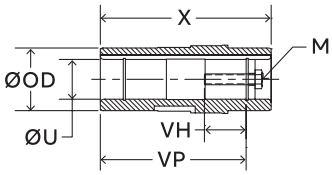

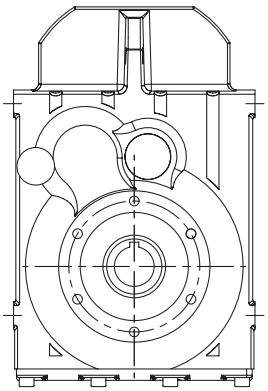

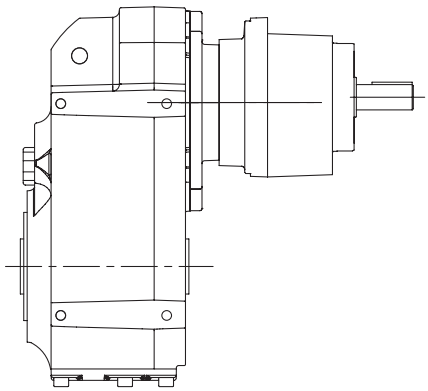

B14 Output flange

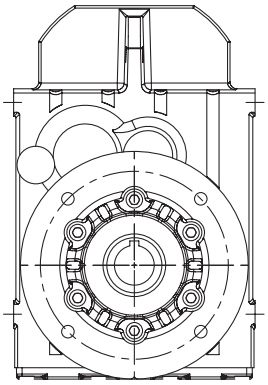

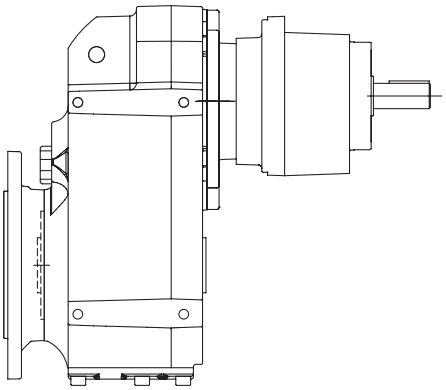

B5 Output flange

	Standard inch output shaft						Standard metric output shaft					
	Ø U	Tol.	UY	VH	Key	M–Tap	Ø U	Tol.	UY	VH	Key	M–Tap
38	1.250	+0.0010 +0.0004	1.38	1.47	1/4 x 1/4 x 1–7/8	3/8–16 X 1–3/4 UNC	30	+0.020 +0.007	33	31	8 x 7 x 40	M10 x 40
48	1.375	+0.0010 +0.0004	1.53	1.45	5/16 x 5/16 x 2–3/16	3/8–16 X 1–3/4 UNC	35	+0.025 +0.009	38	43	10 x 8 x 45	M10 x 50
58	1.500	+0.0010 +0.0004	1.68	2.05	3/8 x 3/8 x 3–1/8	5/11 x 2–1/4 UNC	40	+0.025 +0.009	43	48	12 x 8 x 50	M16 x 60
68	1.500	+0.0010 +0.0004	1.68	2.05	3/8 x 3/8 x 3–1/8	5/8–11 X 2–1/4 UNC	40	+0.025 +0.009	43	48	12 x 8 x 50	M16 x 60
88	2.000	+0.0012 +0.0004	2.23	1.89	1/2 x 1/2 x 3–15/16	3/4–10 X 2–1/4 UNC	50	+0.029 +0.010	54	48	14 x 9 x 80	M16 x 36
108	2.375	+0.0012 +0.0004	2.66	2.53	5/8 x 5/8 x 4–1/16	3/4–10 X 3 UNC	60	+0.029 +0.010	64	68	18 x 11 x 100	M20 x 80
128	2.750	+0.0012 +0.0004	3.04	2.51	5/8 x 5/8 x 6–1/8	3/4–10 X 3 UNC	70	+0.029 +0.010	75	68	20 x 12 x 110	M20 x 80
148	3.625	+0.0012 +0.0004	3.84	2.31	7/8 x 7/8 x 7–1/16	1–8 X 2–1/2 UNC	80	+0.034 +0.012	85	68	22 x 14 x 125	M20 x 85
168	4.000	+0.0014 +0.0005	4.45	2.29	1 x 1 x 5–7/8	1–8 X 2–1/2 UNC	100	+0.034 +0.012	106	77	28 x 16 x 160	M24 x 95

See page MSM-170 for additional hollow bore sizes

Gearcase dimensions

Separate – universal mount – straight hollow bore

Double and triple reduction

MW_2SI_
MW_2SM_
MW_3SI_
MW_3SM_

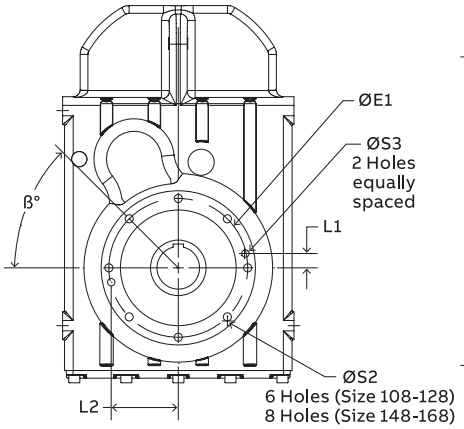

B14 Output flange
Sizes 108-168

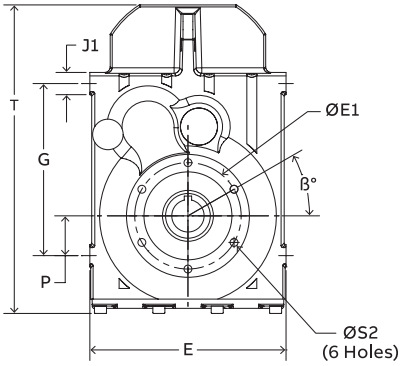

B14 Output flange
Sizes 38-88

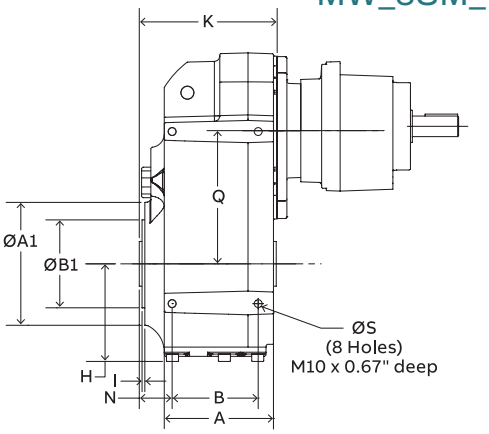

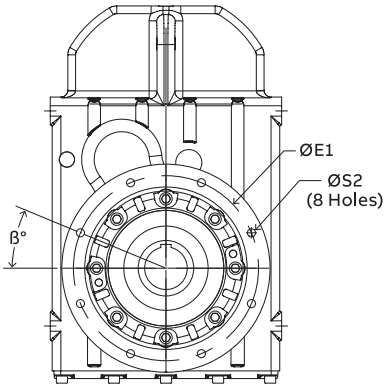

B5 Output flange
Sizes 128-168

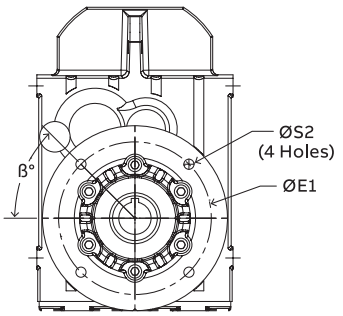

B5 Output flange
Sizes 38-108

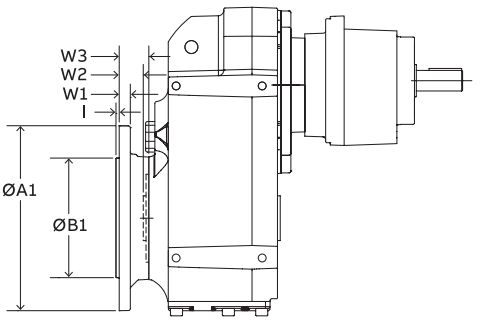

	Mounting dimensions					Outline dimensions									
	B	G	H	P	Ø S	A	K	E	N	Q	T	J1	X	VP	OD
38	3.03	5.83	3.77	1.22	M8 x 0.43	3.96	5.14	7.09	0.97	4.80	11.17	0.91	4.72	4.02	1.77
48	3.66	7.32	4.30	1.69	M10 x 0.52	4.64	5.91	8.35	1.44	5.91	13.28	0.95	5.91	5.04	2.14
58	4.02	8.15	4.67	2.13	M12 x 0.67	5.30	4.02	9.40	1.70	6.34	14.73	1.14	6.54	5.59	2.17
68	4.41	9.06	5.16	2.36	M12 x 0.67	5.87	6.71	10.39	1.36	7.01	16.30	1.02	7.09	5.91	2.56
88	5.51	11.22	6.62	2.76	M16 x 0.87	7.18	8.45	13.39	1.48	8.66	20.39	1.38	8.27	7.09	3.15
108	6.50	13.78	7.33	3.94	M16 x 0.87	8.09	9.74	14.96	1.79	10.39	23.90	1.58	9.45	8.19	3.74
128	8.07	16.34	8.80	4.72	M20 x 1.06	10.45	11.7	17.72	2.46	12.46	28.47	1.97	11.81	10.35	4.33
148	8.66	18.31	10.08	4.92	M24 x 1.26	12.11	13.74	19.69	2.74	13.98	32.41	2.36	13.78	12.21	4.72
168	10.63	21.06	11.41	5.59	M30 x 1.58	14.25	15.71	23.62	3.13	16.22	36.68	2.85	16.14	14.41	5.91

	B14 mounting dimensions									B5 mounting dimensions								
	Ø A1	Ø B1	Ø E1	Ø S2	I	Ø S2	L1	L2	ß	Ø A1	Ø B1	Ø E1	Ø S2	I	W1	W2	W3	ß
38	4.75	3.149	3.94	M8 x 0.63	0.12	–	–	–	30°	6.30	4.331	5.12	0.35	0.14	0.39	0.95	1.18	30°
48	5.20	3.470	4.53	M10 x 0.67	0.12	–	–	–	30°	7.87	5.118	6.50	0.43	0.14	0.47	0.98	1.26	30°
58	5.91	4.3308	5.12	M12 x 0.83	0.16	–	–	–	30°	9.84	7.0867	8.47	0.53	0.16	0.59	0.91	1.20	45°
68	6.27	4.33	5.12	M12 x 0.83	0.14	–	–	–	30°	9.84	7.086	8.47	0.53	0.16	0.59	0.91	1.20	30°
88	7.48	5.118	6.50	M12 x 0.83	0.14	–	–	–	30°	11.81	9.055	10.43	0.53	0.16	0.63	1.46	1.79	45°
108	9.65	7.087	8.47	M16 x 1.10	0.16	0.47	1.10	4.06	30°	13.78	9.842	11.81	0.69	0.20	0.71	1.42	1.77	45°
128	11.69	9.055	10.43	M16 x 1.10	0.16	0.47	1.69	4.92	30°	17.71	13.779	15.75	0.69	0.20	0.87	1.63	1.99	22.5°
148	13.15	9.842	11.81	M20 x 1.34	0.20	0.63	1.22	5.71	45°	17.72	13.779	15.75	0.69	0.20	0.87	1.61	2.05	22.5°
168	16.02	11.810	13.78	M20 x 1.34	0.20	0.63	1.46	6.73	45°	21.65	17.716	19.69	0.69	0.20	0.98	2.01	2.44	22.5°

Input shaft dimensions

Separate – universal mount – straight hollow bore

Double and triple reduction

MW_2SI_
MW_2SM_
MW_3SI_
MW_3SM_

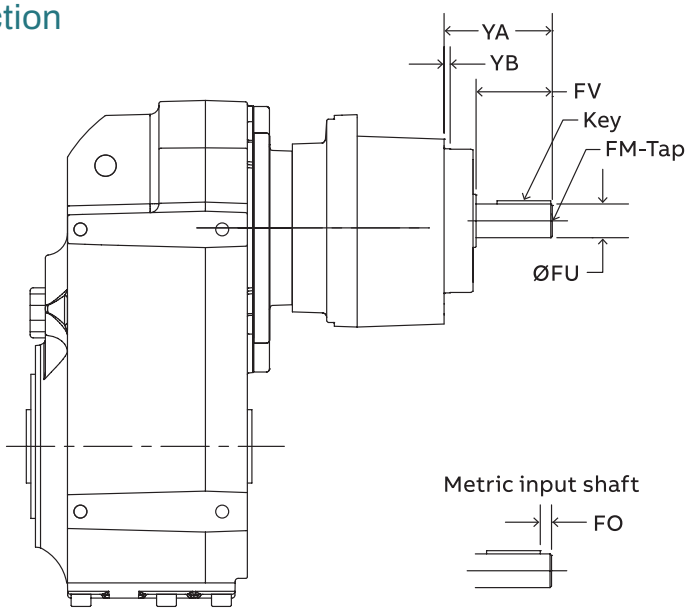

	Separate input mounting dimensions							
	Ø FU	Tol	FO	FV	YA	YB	FM x Depth	Key
71	0.625	+0.0000 –0.0005	–	1.57	2.40	0.16	8–32 UNC x 0.49	3/16 x 3/16 x 1–5/16
	16	+0.012 +0.001	4	40			M5 x 12.5	5 x 5 x 32
80	0.750	+0.0000 –0.0005	–	1.57	2.40	0.16	1/4–20 UNC x 0.63	3/16 x 3/16 x1–5/16
	19	+0.015 +0.002	4	10			M6 x 16	6 x 6 x 32
90	0.875	+0.0000 –0.0005	–	1.97	2.80	0.16	5/16–18 UNC x 0.75	3/16 x 3/16 x 1–5/8
	24	+0.015 +0.002	5	50			M8 x 19	8 x 7 x 40
100	1.125	+0.0000 –0.0005	–	2.36	3.27	0.16	3/8–16 UNC x 0.87	1/4 x 1/4 x 2
	28	+0.015 +0.002	5	60			M10 x 22	8 x 7 x 50
112	1.250	+0.0000 –0.0005	–	2.36	3.27	0.16	3/8–16 UNC x 0.87	1/4 x 1/4 x 2
	28	+0.015 +0.002	5	60			M10 x 22	8 x 7 x 50
132	1.375	+0.0000 –0.0005	–	3.15	6.61	0.14	3/8–16 UNC x 1.10	5/16 x 5/16 x 2–3/4
	38	+0.018 +0.002	5	80			M12 x 28	10 x 8 x 70
160	1.625	+0.0000 –0.0010	–	4.33	8.46	0.14	5/8–11 UNC x 1.42	3/8 x 3/8 x 3–1/2
	42	+0.018 +0.002	10	110			M16 x 36	12 x 8 x 90
180	2.125	+0.0000 –0.0010	–	4.33	9.25	0.20	3/4–10 UNC x 1.65	1/2 x 1/2 x 3–5/8
	55	+0.030 +0.011	10	110			M20 x 42	16 x 10 x 90
225	2.125	+0.0000 –0.0010	–	4.33	9.05	0.20	3/4–10 UNC x 1.65	1/2 x 1/2 x 3–5/8
	60	+0.030 +0.011	15	140			M20 x 42	18 x 11 x 110
250	2.375	+0.0000 –0.0010	–	5.51	10.20	0.20	3/4–10 UNC x 1.65	5/8 x 5/8 x 4–3/8
	65	+0.030 +0.011	15	140			M20 x 42	18 x 11 x 110

Input shaft dimensions

Separate – universal mount – straight hollow bore

Double and triple reduction

MW_2SI_
MW_2SM_
MW_3SI_
MW_3SM_

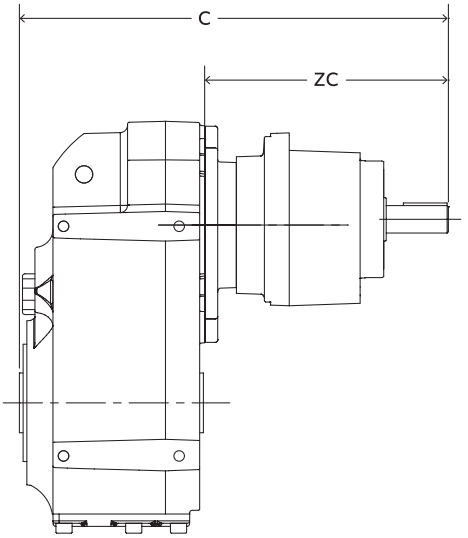

Inch separate input dimensions

Reducer size	Reducer stage	71		80		90		100		112		132		160		180		225		250	
		C	ZC	C	ZC	C	ZC	C	ZC	C	ZC	C	ZC	C	ZC	C	ZC	C	ZC	C	ZC
38	2	11.08	5.94	12.46	7.32	12.85	7.72	13.48	8.35	–	–	–	–	–	–	–	–	–	–	–	–
	3	11.67	6.54	13.05	7.91	13.44	8.31	–	–	–	–	–	–	–	–	–	–	–	–	–	–
48	2	11.63	5.73	13.01	7.11	13.41	7.50	14.04	8.13	14.07	8.17	–	–	–	–	–	–	–	–	–	–
	3	12.30	6.40	13.68	7.78	14.07	8.17	14.70	8.80	–	–	–	–	–	–	–	–	–	–	–	–
58	2	12.00	5.39	13.38	6.77	13.78	7.17	14.40	7.79	14.31	7.70	17.82	11.21	–	–	–	–	–	–	–	–
	3	12.75	6.14	14.13	7.52	14.53	7.92	15.15	8.54	15.08	8.47	–	–	–	–	–	–	–	–	–	–
68	2	12.20	5.49	13.58	6.87	13.98	7.26	14.61	7.89	14.57	7.85	17.89	11.18	–	–	–	–	–	–	–	–
	3	12.93	6.22	14.31	7.60	14.70	7.99	15.33	8.62	–	–	–	–	–	–	–	–	–	–	–	–
88	2	–	–	–	–	15.12	6.67	15.65	7.20	15.57	7.13	18.90	10.45	20.61	12.17	–	–	–	–	–	–
	3	14.33	5.89	15.71	7.26	16.1	7.66	16.73	8.29	16.71	8.27	20.00	11.56	–	–	–	–	–	–	–	–
108	2	–	–	–	–	15.96	6.22	16.48	6.73	16.42	6.67	19.70	9.96	21.46	11.71	22.26	12.52	–	–	–	–
	3	–	–	16.77	7.03	17.17	7.42	17.80	8.05	17.66	7.91	20.98	11.24	22.62	12.87	–	–	–	–	–	–
128	2	–	–	–	–	–	–	18.13	6.36	18.03	6.26	21.32	9.55	22.83	11.06	23.76	11.99	24.84	13.07	–	–
	3	–	–	–	–	18.92	7.15	19.55	7.78	19.37	7.60	22.66	10.89	24.29	12.52	25.22	13.44	–	–	–	–
148	2	–	–	–	–	–	–	–	–	–	–	22.97	9.23	24.51	10.77	25.43	11.69	26.52	12.78	27.68	13.94
	3	–	–	–	–	–	–	21.32	7.58	21.22	7.48	24.47	10.73	26.00	12.26	26.93	13.19	28.01	14.27	–	–
168	2	–	–	–	–	–	–	–	–	–	–	24.37	8.66	25.91	10.20	26.83	11.12	27.91	12.21	29.08	13.37
	3	–	–	–	–	–	–	–	–	–	–	25.99	10.28	27.60	11.89	28.45	12.74	29.53	13.82	30.7	14.98

Metric separate input dimensions (dimensions in mm)

Reducer size	Reducer stage	71		80		90		100		112		132		160		180		225		250	
		C	ZC	C	ZC	C	ZC	C	ZC	C	ZC	C	ZC	C	ZC	C	ZC	C	ZC	C	ZC
38	2	282	151	317	186	327	196	343	212	–	–	–	–	–	–	–	–	–	–	–	–
	3	297	166	332	201	342	211	–	–	–	–	–	–	–	–	–	–	–	–	–	–
48	2	296	146	331	181	341	191	357	207	358	208	–	–	–	–	–	–	–	–	–	–
	3	313	163	348	198	358	208	374	224	–	–	–	–	–	–	–	–	–	–	–	–
58	2	305	137	340	172	350	182	366	198	363	196	453	285	–	–	–	–	–	–	–	–
	3	324	156	359	191	369	201	385	198	383	215	–	–	–	–	–	–	–	–	–	–
68	2	310	140	345	175	355	185	371	201	370	200	455	284	–	–	–	–	–	–	–	–
	3	329	158	364	193	374	203	390	219	–	–	–	–	–	–	–	–	–	–	–	–
88	2	–	–	–	–	384	170	398	183	396	181	480	266	524	309	–	–	–	–	–	–
	3	364	150	399	185	409	195	425	211	425	210	508	394	–	–	–	–	–	–	–	–
108	2	–	–	–	–	406	158	419	171	471	170	501	253	545	298	566	318	–	–	–	–
	3	–	–	426	179	436	189	452	205	449	201	533	286	575	327	–	–	–	–	–	–
128	2	–	–	–	–	–	–	461	162	458	159	542	243	580	281	604	305	661	362	–	–
	3	–	–	–	–	481	182	497	198	492	193	576	277	617	318	641	342	–	–	–	–
148	2	–	–	–	–	–	–	–	–	–	–	584	235	623	274	646	297	703	355	703	354
	3	–	–	–	–	–	–	542	193	539	190	622	273	661	312	684	335	741	393	–	–
168	2	–	–	–	–	–	–	–	–	–	–	619	220	658	259	682	283	739	340	739	340
	3	–	–	–	–	–	–	–	–	–	–	660	261	701	302	723	324	780	381	780	381

Output shaft dimensions

Separate – universal mount – straight hollow bore

Four- and five-stage reduction

MW_4SI_
MW_5SI_
MW_4SM_
MW_5SM_

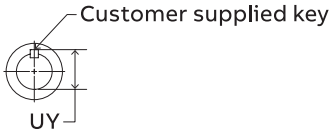

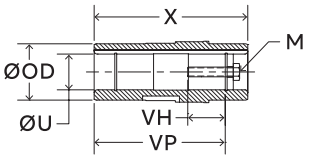

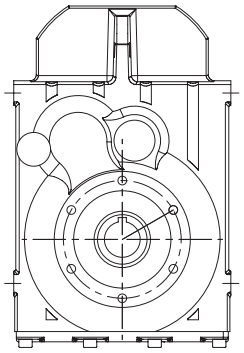

B14 Output flange

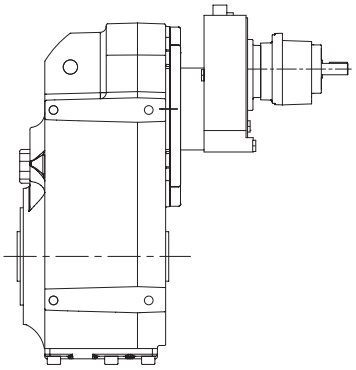

4 Stage reduction

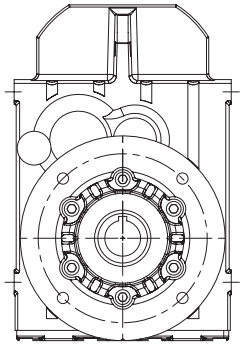

B5 Output flange

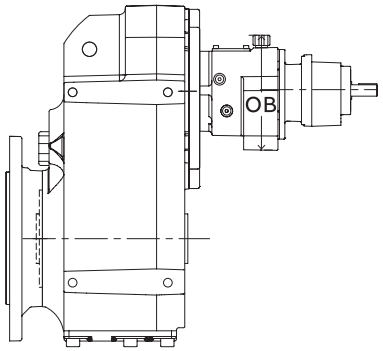

5 Stage reduction

	Standard inch hollow bore						Standard metric hollow bore					
	Ø U	Tol.	UY	VH	Key	M–Tap	Ø U	Tol.	UY	VH	Key	M–Tap
68	1.500	+0.0010 +0.0004	1.68	2.05	3/8 x 3/8 x 3–1/8	5/8–11 X 2–1/4 UNC	40	+0.025 +0.009	43	48	12 x 8 x 50	M16 x 60
88	2.000	+0.0012 +0.0004	2.23	1.89	1/2 x 1/2 x 3–15/16	3/4–10 X 2–1/4 UNC	50	+0.029 +0.010	54	48	14 x 9 x 80	M16 x 36
108	2.375	+0.0012 +0.0004	2.66	2.53	5/8 x 5/8 x 4–1/16	3/4–10 X 3 UNC	60	+0.029 +0.010	64	68	18 x 11 x 100	M20 x 80
128	2.750	+0.0012 +0.0004	3.04	2.51	5/8 x 5/8 x 6–1/8	3/4–10 X 3 UNC	70	+0.029 +0.010	75	68	20 x 12 x 110	M20 x 80
148	3.625	+0.0012 +0.0004	3.84	2.31	7/8 x 7/8 x 7–1/16	1–8 X 2–1/2 UNC	80	+0.034 +0.012	85	68	20 x 14 x 125	M20 x 85
168	4.000	+0.0014 +0.0005	4.45	2.29	1 x 1 x 5–7/8	1–8 X 2–1/2 UNC	100	+0.034 +0.012	106	77	28 x 16 x 180	M24 x 95

See page MSM-170 for additional hollow bore sizes

Gearcase dimensions

Separate – universal mount – straight hollow bore

Four- and five-stage reduction

MW_4SI_
MW_5SI_
MW_4SM_
MW_5SM_

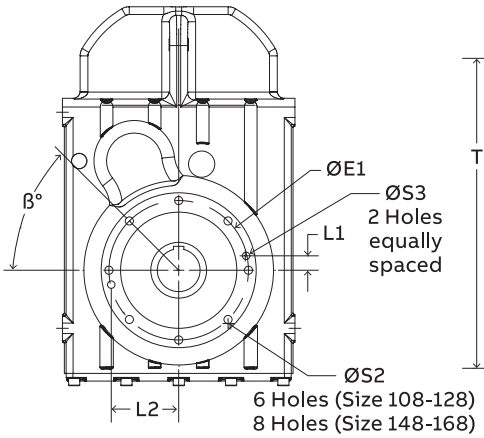

B14 Output flange
Sizes 108-168

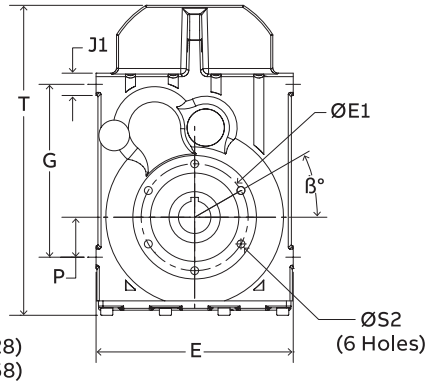

B14 Output flange
Sizes 68-88

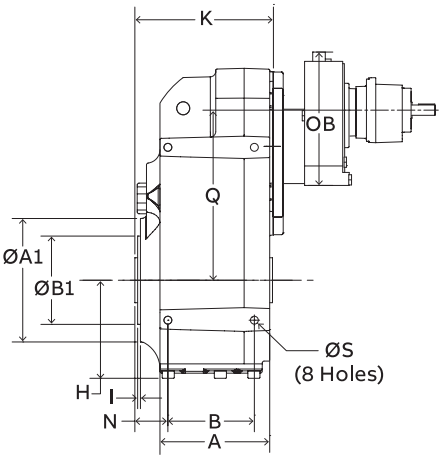

4 Stage reduction

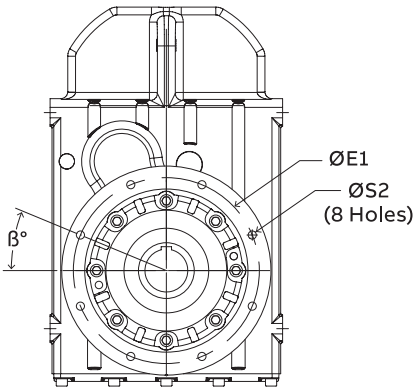

B5 Output flange
Sizes 128-168

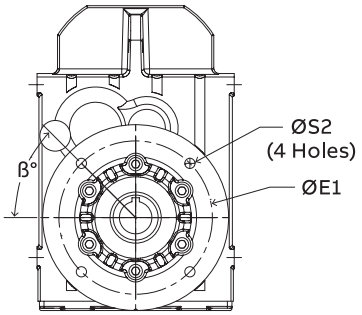

B5 Output flange
Sizes 68-108

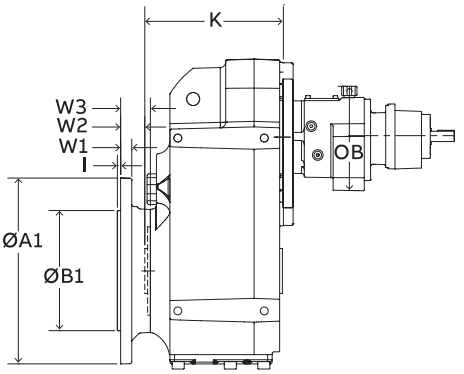

5 Stage reduction

	Mounting dimensions					Outline dimensions									4 stage		5 stage	
	B	G	H	P	Ø S	A	K	E	N	T	J1	X	VP	OD	Q	OB	Q	OB
68	4.41	9.06	5.16	2.36	M12 x 0.67	5.87	6.71	10.39	1.36	16.30	1.02	7.09	5.91	2.56	8.94	7.83	7.01	6.29
88	5.51	11.22	6.62	2.76	M16 x 0.87	7.18	8.45	13.39	1.48	20.39	1.38	8.27	7.09	3.15	11.20	9.84	8.66	8.86
108	6.50	13.78	7.33	3.94	M16 x 0.87	8.09	9.74	14.96	1.79	23.90	1.58	9.45	8.19	3.74	12.93	9.84	10.39	9.84
128	8.07	16.34	8.80	4.72	M20 x 1.06	10.45	11.7	17.72	2.46	28.47	1.97	11.81	10.35	4.33	15.53	11.57	12.46	11.57
148	8.66	18.31	10.08	4.92	M24 x 1.26	12.11	13.74	19.69	2.74	32.41	2.36	13.78	12.21	4.72	17.05	11.57	13.98	11.57
168	10.63	21.06	11.41	5.59	M30 x 1.58	14.25	15.71	23.62	3.13	36.68	2.85	16.14	14.41	5.91	19.29	11.57	16.22	11.57

	B14 mounting dimensions									B5 mounting dimensions								
	Ø A1	Ø B1	Ø E1	Ø S2	I	Ø S3	L1	L2	ß	Ø A1	Ø B1	Ø E1	Ø S2	I	W1	W2	W3	ß
68	6.27	4.33	5.12	M12 x 0.83	0.14	–	–	–	30˚	9.84	7.086	8.47	0.53	0.16	0.59	0.91	1.20	30˚
88	7.48	5.118	6.50	M12 x 0.83	0.14	–	–	–	30˚	11.81	9.055	10.43	0.53	0.16	0.63	1.46	1.79	45˚
108	9.65	7.087	8.47	M16 x 1.10	0.16	0.47	1.10	4.06	30˚	13.78	9.842	11.81	0.69	0.20	0.71	1.42	1.77	45˚
128	11.69	9.055	10.43	M16 x 1.10	0.16	0.47	1.69	4.92	30˚	17.71	13.779	15.75	0.69	0.20	0.87	1.63	1.99	22.5˚
148	13.15	9.842	11.81	M20 x 1.34	0.20	0.63	1.22	5.71	45˚	17.72	13.779	15.75	0.69	0.20	0.87	1.61	2.05	22.5˚
168	16.02	11.810	13.78	M20 x 1.34	0.20	0.63	1.46	6.73	45˚	21.65	17.716	19.69	0.69	0.20	0.98	2.01	2.44	22.5˚

Input shaft dimensions

Separate – universal mount – straight hollow bore

Four- and five-stage reduction

MW_4SI_
MW_5SI_
MW_4SM_
MW_5SM_

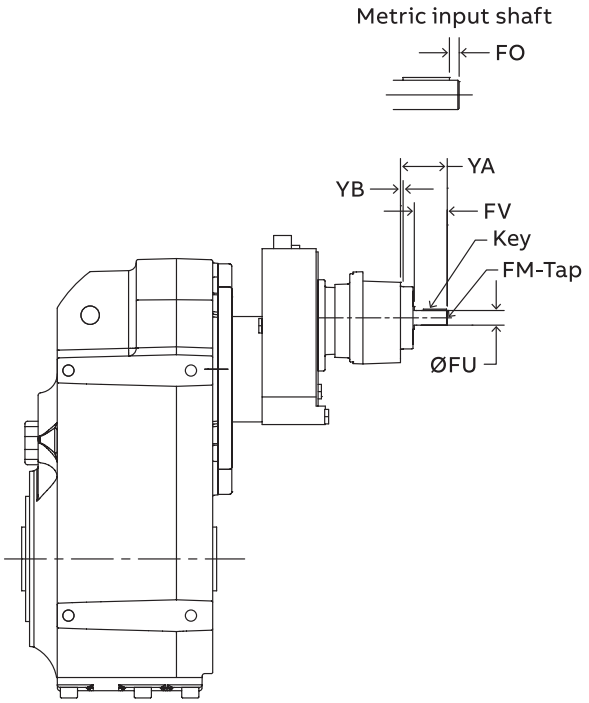

4 Stage reduction

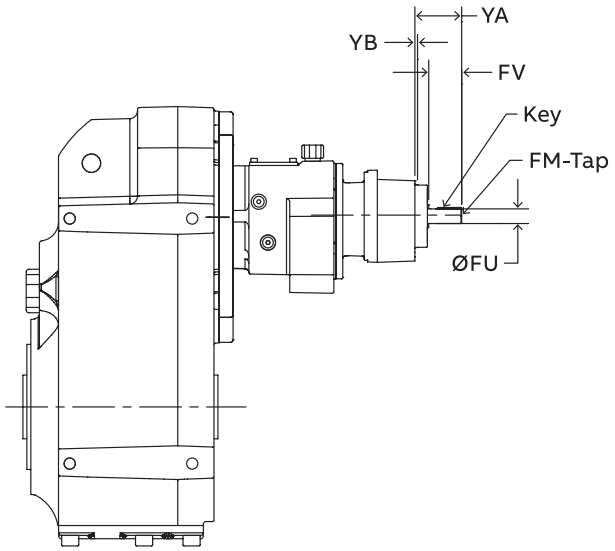

5 Stage reduction

	Separate input mounting dimensions							
	Ø FU	Tol	FO	FV	YA	YB	FM x Depth	Key
71	0.625	+0.0000 –0.0005	–	1.57	2.40	0.16	8–32 UNC x 0.49	3/16 x 3/16 x 1–5/16
	16	+0.012 +0.001	4	40			M5 x 12.5	5 x 5 x 32
80	0.750	+0.0000 –0.0005	–	1.57	2.40	0.16	1/4–20 UNC x 0.63	3/16 x 3/16 x1–5/16
	19	+0.015 +0.002	4	10			M6 x 16	6 x 6 x 32
90	0.875	+0.0000 –0.0005	–	1.97	2.80	0.16	5/16–18 UNC x 0.75	3/16 x 3/16 x 1–5/8
	24	+0.015 +0.002	5	50			M8 x 19	8 x 7 x 40
100	1.125	+0.0000 –0.0005	–	2.36	3.27	0.16	3/8–16 UNC x 0.87	1/4 x 1/4 x 2
	28	+0.015 +0.002	5	60			M10 x 22	8 x 7 x 50
112	1.250	+0.0000 –0.0005	–	2.36	3.27	0.16	3/8–16 UNC x 0.87	1/4 x 1/4 x 2
	28	+0.015 +0.002	5	60			M10 x 22	8 x 7 x 50
132	1.375	+0.0000 –0.0005	–	3.15	6.61	0.14	3/8–16 UNC x 1.10	5/16 x 5/16 x 2–3/4
	38	+0.018 +0.002	5	80			M12 x 28	10 x 8 x 70

Input shaft dimensions

Separate – universal mount – straight hollow bore

Four- and five-stage reduction

MW_4SI_
MW_5SI_
MW_4SM_
MW_5SM_

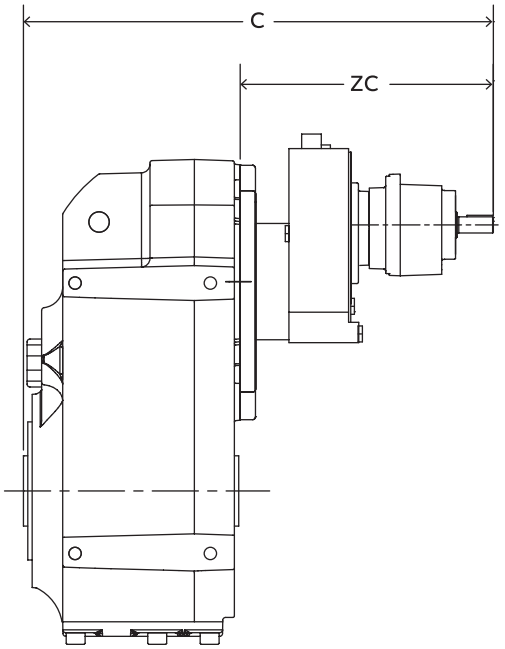

4 Stage reduction

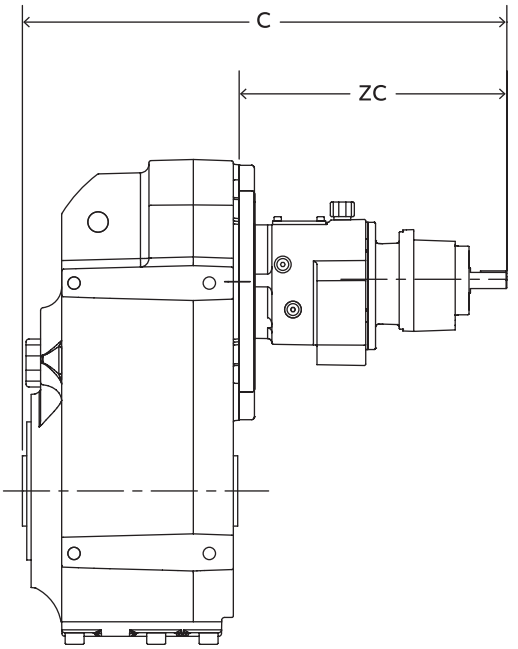

5 Stage reduction

Inch separate input dimensions

Reducer size	Reducer stage	71		80		90		100		112		132	
		C	ZC	C	ZC	C	ZC	C	ZC	C	ZC	C	ZC
68	4	17.21	10.50	18.51	11.80	18.91	12.20	19.61	12.90	–	–	–	–
	5	18.34	11.63	19.71	13.00	20.11	13.40	20.74	14.03	–	–	–	–
88	4	18.77	10.32	20.07	11.62	20.47	12.02	21.17	12.72	21.17	12.72	–	–
	5	21.11	12.66	22.49	14.04	22.88	14.43	23.51	15.06	23.55	15.10	–	–
108	4	20.38	10.64	21.68	11.94	22.08	12.34	22.78	13.04	22.78	13.04	–	–
	5	22.25	12.51	23.63	13.89	24.02	14.28	24.65	14.91	24.69	14.95	–	–
128	4	22.83	11.06	24.23	12.46	24.63	12.86	25.23	13.46	25.23	13.46	28.53	16.76
	5	24.07	12.30	25.45	13.68	25.84	14.07	26.47	14.70	26.51	14.74	–	–
148	4	24.65	10.91	26.05	12.31	26.45	12.71	27.05	13.31	27.05	13.31	30.35	16.61
	5	25.88	12.14	27.26	13.52	27.65	13.91	28.28	14.54	28.32	14.58	–	–
168	4	27.23	11.52	28.63	12.92	29.03	13.32	29.63	13.92	29.63	13.92	32.93	17.22
	5	29.60	13.89	30.98	15.27	31.37	15.66	32.00	16.29	31.96	16.25	35.27	19.56

Metric separate input dimensions (dimensions in mm)

Reducer size	Reducer stage	71		80		90		100		112		132	
		C	ZC	C	ZC	C	ZC	C	ZC	C	ZC	C	ZC
68	4	437	267	470	300	480	310	498	328	–	–	–	–
	5	466	295	501	330	511	340	527	356	–	–	–	–
88	4	477	262	510	295	520	305	538	323	538	323	–	–
	5	536	322	571	357	581	367	597	383	598	384	–	–
108	4	518	270	551	303	561	313	579	331	579	331	–	–
	5	565	318	600	353	610	363	626	379	627	380	–	–
128	4	580	281	615	316	626	327	641	342	641	342	725	426
	5	611	312	646	347	656	357	672	373	673	374	–	–
148	4	626	277	662	313	672	323	687	338	687	338	771	422
	5	657	308	692	343	702	353	718	369	719	370	–	–
168	4	692	293	727	328	737	338	753	353	753	353	836	437
	5	752	353	787	388	797	398	813	414	812	413	896	497

Output shaft dimensions

MW_2GH_
MW_3GH_

Integral – universal mount – straight hollow bore
Double and triple reduction

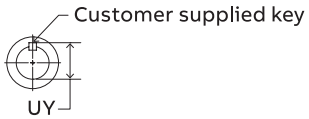

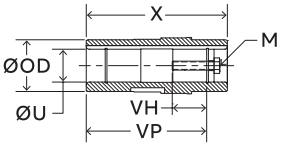

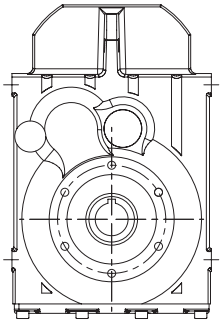

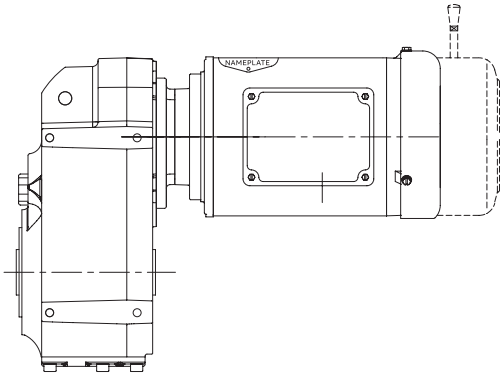

B14 Output flange

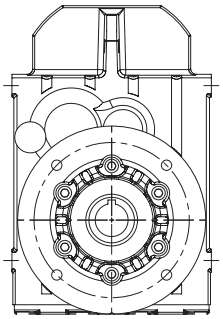

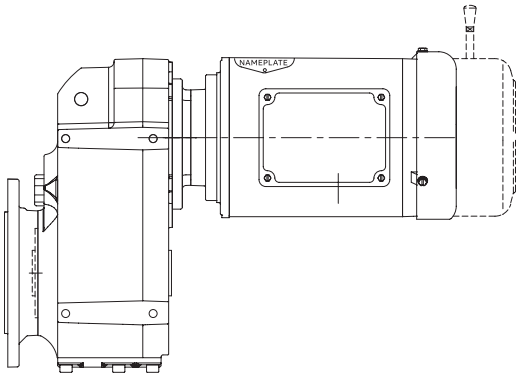

B5 Output flange

	Standard inch hollow bore						Standard metric hollow bore					
	Ø U	Tol.	UY	VH	Key	M–Tap	Ø U	Tol.	UY	VH	Key	M–Tap
38	1.250	+0.0010 +0.0004	1.38	1.47	1/4 x 1/4 x 1–7/8	3/8–16 X 1–3/4 UNC	30	+0.020 +0.007	33	31	8x7x40	M10x40
48	1.375	+0.0010 +0.0004	1.53	1.45	5/16 x 5/16 x 2–3/16	3/8–16 X 1–3/4 UNC	35	+0.025 +0.009	38	43	10 x 8 x 45	M10 x 50
58	1.500	+0.0010 +0.0004	1.68	2.05	3/8 x 3/8 x 3–1/8	5/8–11 X 2–1/4 UNC	40	+0.025 +0.009	43	48	12 x 8 x 50	M16 x 60
58	1.500	+0.0010 +0.0004	1.68	2.05	3/8 x 3/8 x 3–1/8	5/8–11 X 2–1/4 UNC	40	+0.025 +0.009	43	48	12 x 8 x 50	M16 x 60
68	1.500	+0.0010 +0.0004	1.68	2.05	3/8 x 3/8 x 3–1/8	5/8–11 X 2–1/4 UNC	40	+0.025 +0.009	43	48	12 x 8 x 50	M16 x 60
88	2.000	+0.0012 +0.0004	2.23	1.89	1/2 x 1/2 x 3–15/16	3/4–10 X 2–1/4 UNC	50	+0.029 +0.010	54	48	14 x 9 x 80	M16 x 36
108	2.375	+0.0012 +0.0004	2.66	2.53	5/8 x 5/8 x 4–1/16	3/4–10 X 3 UNC	60	+0.029 +0.010	64	68	18 x 11 x 100	M20 x 80
128	2.750	+0.0012 +0.0004	3.04	2.51	5/8 x 5/8 x 6–1/8	3/4–10 X 3 UNC	70	+0.029 +0.010	75	68	20 x 12 x 110	M20 x 80
148	3.625	+0.0012 +0.0004	3.84	2.31	7/8 x 7/8 x 7–1/16	1–8 X 2–1/2 UNC	80	+0.034 +0.012	85	68	22 x 14 x 125	M20 x 85
168	4.000	+0.0014 +0.0005	4.45	2.29	1 x 1 x 5–7/8	1–8 X 2–1/2 UNC	100	+0.034 +0.012	106	77	28 x 16 x 160	M24 x 95

See page MSM-170 for additional hollow bore sizes

Gearcase dimensions

MW_2GH_
MW_3GH_

Integral – universal mount – straight hollow bore
Double and triple reduction

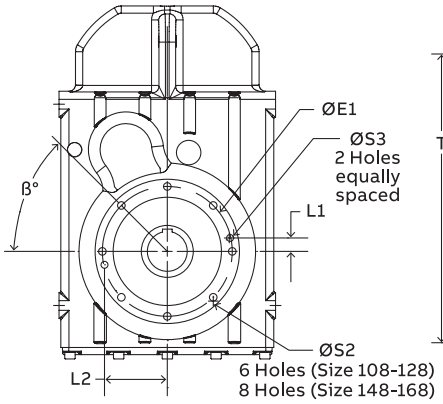

B14 Output flange
Sizes 108-168

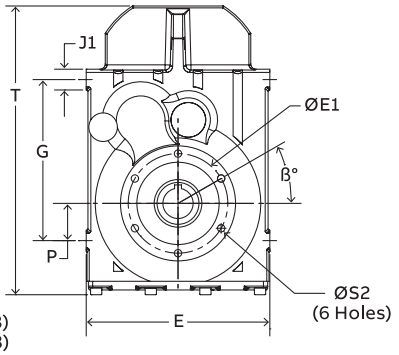

B14 Output flange
Size 38-88

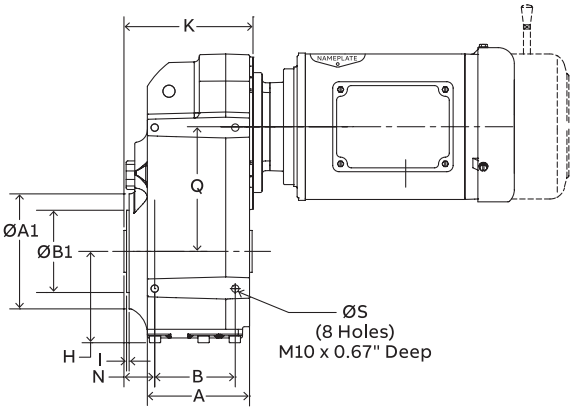

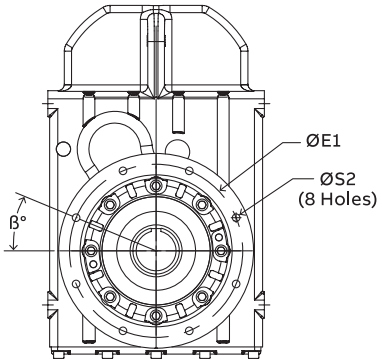

B5 Output flange
Sizes 128-168

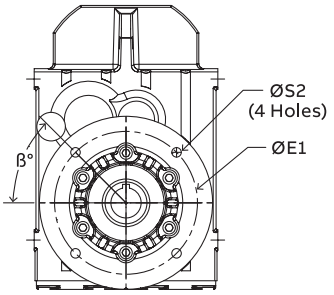

B5 Output flange
Sizes 38-108

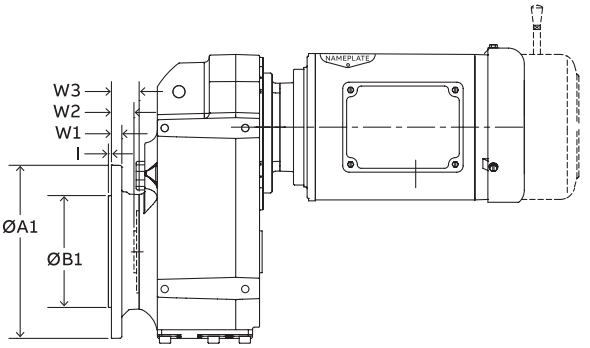

	Mounting dimensions					Outline dimensions									
	B	G	H	P	Ø S	A	K	E	N	Q	T	J1	X	VP	OD
38	3.03	5.83	3.77	1.22	M8 x 0.43	3.96	5.14	7.09	0.97	4.80	11.17	0.91	4.72	4.02	1.77
48	3.66	7.32	4.30	1.69	M10 x 0.52	4.64	5.91	8.35	1.44	5.91	13.28	0.95	5.91	5.04	2.14
58	4.02	8.15	4.67	2.13	M10 x 0.67	5.30	6.61	9.40	1.70	6.34	14.73	1.06	6.54	5.59	2.17
68	4.41	9.06	5.16	2.36	M12 x 0.67	5.87	6.71	10.39	1.36	7.01	16.30	1.02	7.09	5.91	2.56
88	5.51	11.22	6.62	2.76	M16 x 0.87	7.18	8.45	13.39	1.48	8.66	20.39	1.38	8.27	7.09	3.15
108	6.50	13.78	7.33	3.94	M16 x 0.87	8.09	9.74	14.96	1.79	10.39	23.90	1.58	9.45	8.19	3.74
128	8.07	16.34	8.80	4.72	M20 x 1.06	10.45	11.7	17.72	2.46	12.46	28.47	1.97	11.81	10.35	4.33
148	8.66	18.31	10.08	4.92	M24 x 1.26	12.11	13.74	19.69	2.74	13.98	32.41	2.36	13.78	12.21	4.72
168	10.63	21.06	11.41	5.59	M30 x 1.58	14.25	15.71	23.62	3.13	16.22	36.68	2.85	16.14	14.41	5.91

	B14 mounting dimensions									B5 mounting dimensions								
	Ø A1	Ø B1	Ø E1	Ø S2	I	Ø S3	L1	L2	ß	Ø A1	Ø B1	Ø E1	Ø S2	I	W1	W2	W3	ß
38	4.75	3.149	3.94	M8 x 0.63	0.12	–	–	–	30°	6.30	4.331	5.12	0.35	0.14	0.39	0.95	1.18	45°
48	5.20	3.470	4.53	M10 x 0.67	0.12	–	–	–	30°	7.87	5.118	6.50	0.43	0.14	0.47	0.98	1.26	45°
58	5.91	4.33	5.12	M12 x 0.83	0.16	–	–	–	30°	9.84	7.0867	8.47	0.53	0.16	0.59	0.91	1.20	45°
68	6.27	4.33	5.12	M12 x 0.83	0.14	–	–	–	30°	9.84	7.086	8.47	0.53	0.16	0.59	0.91	1.20	45°
88	7.48	5.118	6.50	M12 x 0.83	0.14	–	–	–	30°	11.81	9.055	10.43	0.53	0.16	0.63	1.46	1.79	45°
108	9.65	7.087	8.47	M16 x 1.10	0.16	0.47	1.10	4.06	30°	13.78	9.842	11.81	0.69	0.20	0.71	1.42	1.77	45°
128	11.69	9.055	10.43	M16 x 1.10	0.16	0.47	1.69	4.92	30°	17.71	13.779	15.75	0.69	0.20	0.87	1.63	1.99	22.5°
148	13.15	9.842	11.81	M20 x 1.34	0.20	0.63	1.22	5.71	45°	17.72	13.779	15.75	0.69	0.20	0.87	1.61	2.05	22.5°
168	16.02	11.810	13.78	M20 x 1.34	0.20	0.63	1.46	6.73	45°	21.65	17.716	19.69	0.69	0.20	0.98	2.01	2.44	22.5°

Integral – standard motor dimensions

MW_2GH_
MW_3GH_

Universal mount – straight hollow bore

Double and triple reduction

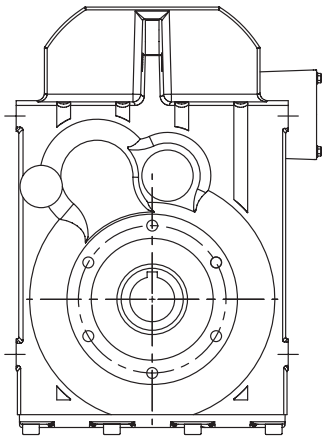

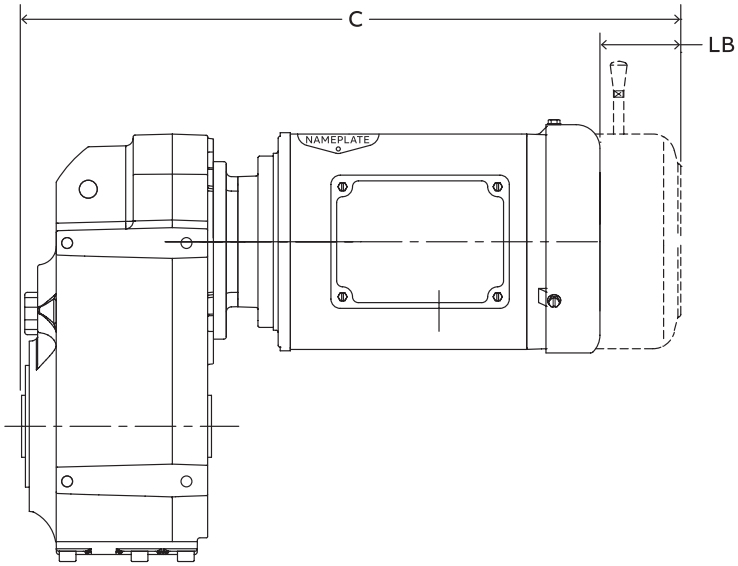

Standard integral motor dimensions 1/4 – 10 Hp

Reducer size	Reducer stage	71C4/71D4/71E4		80F4		80G4		90H4		90I4		100J4		112L4		132M4		132N4	
		C	LB	C	LB	C	LB	C	LB	C	LB	C	LB	C	LB	C	LB	C	LB
38	2	15.67	2.37	15.82	2.11	17.19	1.74	17.29	2.62	18.17	1.74	20.13	1.75	–	–	–	–	–	–
	3	16.26	2.37	16.41	2.11	17.78	1.74	17.88	2.62	18.76	1.74	–	–	–	–	–	–	–	–
48	2	16.22	2.37	16.37	2.11	17.74	1.74	17.84	2.62	18.72	1.74	20.68	1.75	22.44	2.51	–	–	–	–
	3	16.89	2.37	17.04	2.11	18.41	1.74	18.51	2.62	19.39	1.74	21.35	1.75	–	–	–	–	–	–
58	2	16.59	4.81	16.74	4.81	18.11	3.81	18.21	5.26	19.09	5.26	20.94	6.24	22.69	5.26	24.39	8.44	25.89	8.94
	3	17.96	4.81	17.86	4.81	18.86	3.81	18.96	5.26	19.85	5.26	23.08	6.24	23.44	5.26	–	–	–	–
68	2	16.79	2.37	16.94	2.11	18.31	1.74	18.41	2.62	19.29	1.74	21.25	1.75	22.89	2.51	24.46	6.38	25.96	6.38
	3	17.52	2.37	17.67	2.11	19.04	1.74	19.14	2.62	20.02	1.74	21.98	1.75	–	–	–	–	–	–
88	2	–	–	–	–	–	–	19.56	2.62	20.44	1.74	22.30	1.75	23.95	2.51	25.47	6.38	26.97	6.38
	3	18.92	2.37	19.07	2.11	20.44	1.74	20.54	2.62	21.42	1.74	23.38	1.75	25.09	2.51	26.57	6.38	28.07	6.38
108	2	–	–	–	–	–	–	20.40	2.62	21.28	1.74	23.12	1.75	24.79	2.51	26.27	6.38	27.77	6.38
	3	–	–	20.13	2.11	21.51	1.74	21.62	2.62	22.51	1.74	24.48	1.75	26.03	2.51	27.54	6.38	29.04	6.38
128	2	–	–	–	–	–	–	–	–	–	–	24.78	1.75	26.40	2.51	27.88	6.38	29.38	6.38
	3	–	–	–	–	–	–	23.35	2.62	24.23	1.74	26.19	1.75	27.74	2.51	29.22	6.38	30.72	6.38
148	2	–	–	–	–	–	–	–	–	–	–	–	–	–	–	29.55	6.38	31.05	6.38
	3	–	–	–	–	–	–	–	–	–	–	27.98	1.75	29.60	2.51	31.04	6.38	32.54	6.38
168	2	–	–	–	–	–	–	–	–	–	–	–	–	–	–	30.94	6.38	32.44	6.38
	3	–	–	–	–	–	–	–	–	–	–	–	–	–	–	32.55	6.38	34.05	6.38

Standard integral motor dimensions 15 – 40 Hp

Reducer size	Reducer stage	160P4		160Q4		180R4		180S4	200T4
		C	LB	C	LB	C	LB	C	C
88	2	29.33	7.02	29.33	7.02	–	–	–	–
	3	–	–	–	–	–	–	–	–
108	2	30.17	7.02	30.17	7.02	34.68	5.71	36.43	–
	3	31.33	7.02	–	–	–	–	–	–
128	2	31.55	7.02	31.55	7.02	36.18	5.71	37.93	39.43
	3	33.01	7.02	33.01	7.02	37.64	5.71	39.39	–
148	2	33.24	7.02	33.24	7.02	37.86	5.71	39.61	41.11
	3	34.73	7.02	34.73	7.02	39.36	5.71	41.11	42.61
168	2	34.63	7.02	34.63	7.02	39.25	5.71	41.00	42.50
	3	36.32	7.02	36.32	7.02	40.87	5.71	42.62	44.12

See page ENG–20 for additional integral gearmotor information.

Integral – washdown motor dimensions

MW_2GH_
MW_3GH_

Universal mount – straight hollow bore
Double and triple reduction

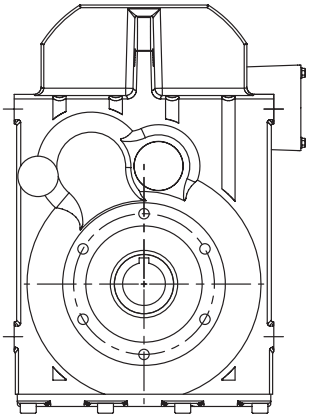

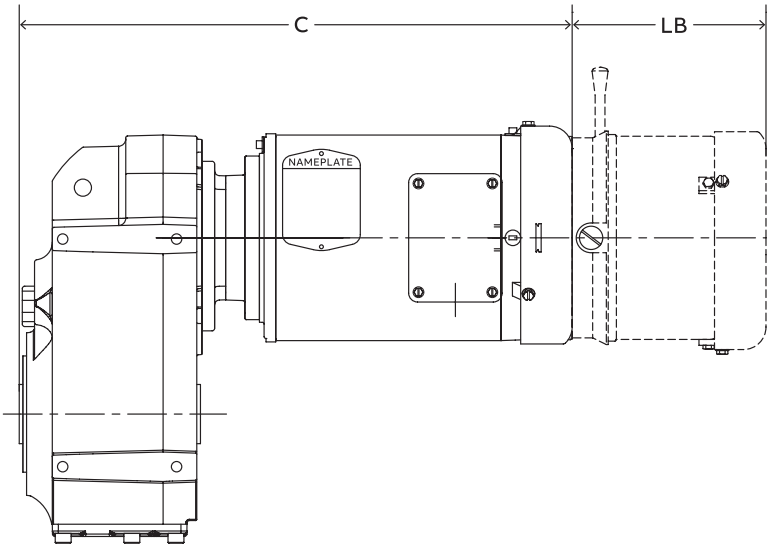

Washdown integral motor dimensions 1/2 – 10 Hp

Reducer size	Reducer stage	71E4		80F4		80G4		90H4		90I4		100J4		112L4		132M4		132N4	
		C	LB	C	LB	C	LB	C	LB	C	LB	C	LB	C	LB	C	LB	C	LB
38	2	16.29	4.81	16.19	4.81	17.19	3.81	17.29	5.26	18.17	5.26	21.52	6.24	–	–	–	–	–	–
	3	16.88	4.81	16.78	4.81	17.78	3.81	17.88	5.26	18.76	5.26	–	–	–	–	–	–	–	–
48	2	16.84	4.81	16.74	4.81	17.74	3.81	17.84	5.26	18.72	5.26	22.07	6.24	22.44	5.26	–	–	–	–
	3	17.51	4.81	17.41	4.81	18.41	3.81	18.51	5.26	19.39	5.26	22.74	6.24	–	–	–	–	–	–
58	2	17.21	4.81	17.07	4.81	18.11	3.81	18.21	5.26	19.09	5.26	22.33	6.24	22.69	5.26	24.39	8.44	25.89	8.94
	3	18.58	4.81	18.19	4.81	18.86	3.81	18.96	5.26	19.84	5.26	24.47	6.24	23.44	5.26	–	–	–	–
68	2	17.41	4.81	17.31	4.81	18.31	3.81	18.41	5.26	19.29	5.26	22.64	6.24	22.89	5.26	24.46	8.44	25.96	8.94
	3	18.14	4.81	18.04	4.81	19.04	3.81	19.14	5.26	20.02	5.26	23.37	6.24	–	–	–	–	–	–
88	2	–	–	–	–	–	–	19.56	5.26	20.44	5.26	23.69	6.24	23.95	5.26	25.47	8.44	26.97	8.94
	3	19.54	4.81	19.44	4.81	20.44	3.81	20.54	5.26	21.42	5.26	24.77	6.24	25.09	5.26	26.57	8.44	28.07	8.94
108	2	–	–	–	–	–	–	20.40	5.26	21.28	5.26	24.51	6.24	24.79	5.26	26.27	8.44	27.77	8.94
	3	–	–	20.50	4.81	21.51	3.81	21.62	5.26	22.51	5.26	25.87	6.24	26.03	5.26	27.54	8.44	29.04	8.94
128	2	–	–	–	–	–	–	–	–	–	–	26.17	6.24	26.40	5.26	27.88	8.44	29.38	8.94
	3	–	–	–	–	–	–	23.35	5.26	24.23	5.26	27.58	6.24	27.74	5.26	29.22	8.44	30.72	8.94
148	2	–	–	–	–	–	–	–	–	–	–	–	–	–	–	29.55	8.44	31.05	8.94
	3	–	–	–	–	–	–	–	–	–	–	29.37	6.24	29.60	5.26	31.04	8.44	32.54	8.94
168	2	–	–	–	–	–	–	–	–	–	–	–	–	–	–	30.94	8.44	32.44	8.94
	3	–	–	–	–	–	–	–	–	–	–	–	–	–	–	32.55	8.44	34.05	8.94

See page ENG–20 for additional integral gearmotor information.

Output shaft dimensions

Integral – universal mount – straight hollow bore

Four- and five-stage reduction

MW_4GH_
MW_5GH_

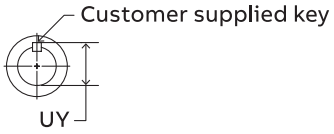

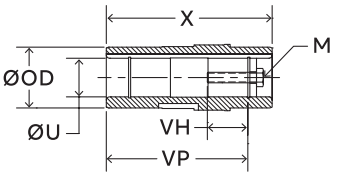

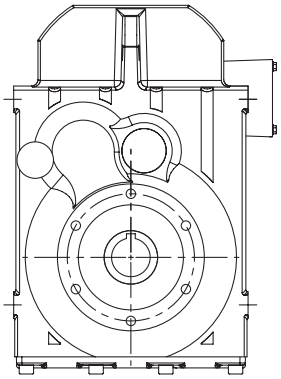

B14 Output flange

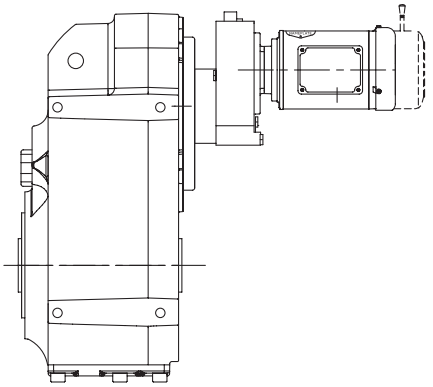

4 Stage reduction

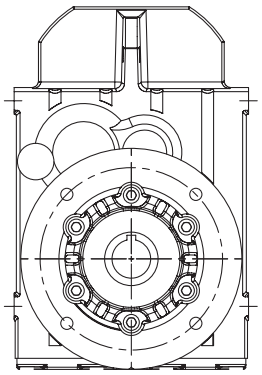

B5 Output flange

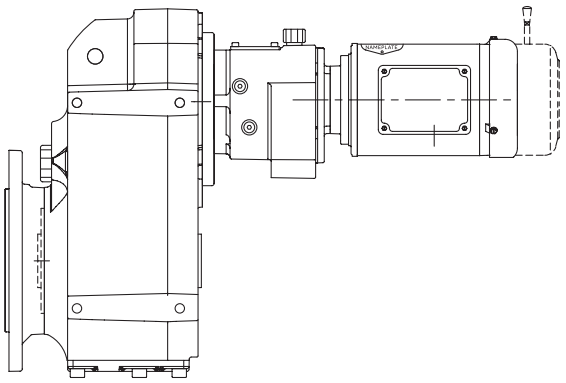

5 Stage reduction

	Standard inch hollow bore						Standard metric hollow bore					
	Ø U	Tol.	UY	VH	Key	M–Tap	Ø U	Tol.	UY	VH	Key	M–Tap
68	1.500	+0.0010 +0.0004	1.68	2.05	3/8 x 3/8 x 3–1/8	5/8–11 X 2–1/4 UNC	40	+0.025 +0.009	43	48	12 x 8 x 50	M16 x 60
88	2.000	+0.0012 +0.0004	2.23	1.89	1/2 x 1/2 x 3–15/16	3/4–10 X 2–1/4 UNC	50	+0.029 +0.010	54	48	14 x 9 x 80	M16 x 36
108	2.375	+0.0012 +0.0004	2.66	2.53	5/8 x 5/8 x 4–1/16	3/4–10 X 3 UNC	60	+0.029 +0.010	64	68	18 x 11 x 100	M20 x 80
128	2.750	+0.0012 +0.0004	3.04	2.51	5/8 x 5/8 x 6–1/8	3/4–10 X 3 UNC	70	+0.029 +0.010	75	68	20 x 12 x 110	M20 x 80
148	3.625	+0.0012 +0.0004	3.84	2.31	7/8 x 7/8 x 7–1/16	1–8 X 2–1/2 UNC	80	+0.034 +0.012	85	68	20 x 14 x 125	M20 x 85
168	4.000	+0.0014 +0.0005	4.45	2.29	1 x 1 x 5–7/8	1–8 X 2–1/2 UNC	100	+0.034 +0.012	106	77	28 x 16 x 180	M24 x 95

See page MSM-170 for additional hollow bore sizes

Gearcase dimensions

MW_4GH_
MW_5GH_

Integral – universal mount – straight hollow bore
Four- and five-stage reduction

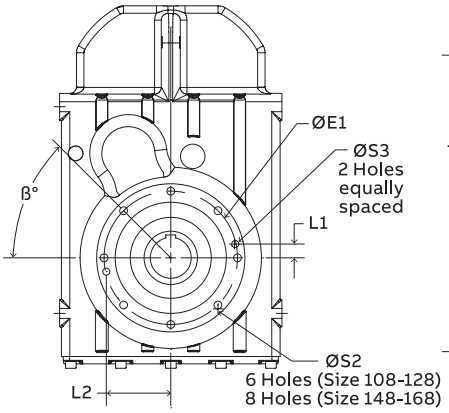

B14 Output flange
Sizes 108-168

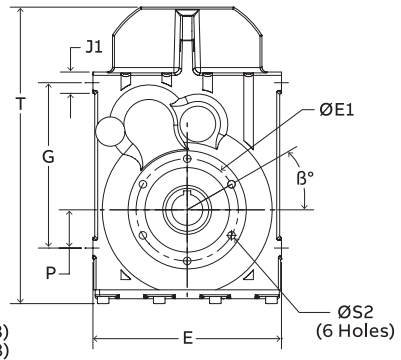

B14 Output flange
Sizes 68-88

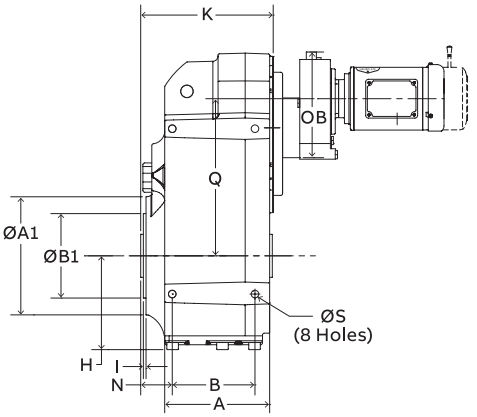

4 Stage reduction

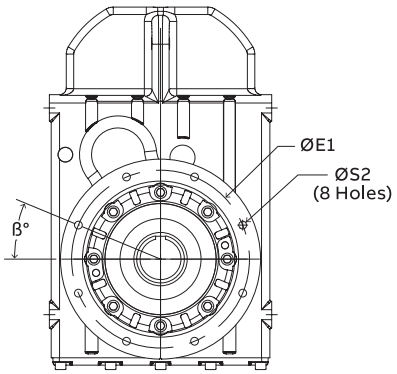

B5 Output flange
Sizes 128-168

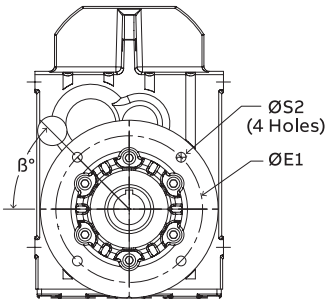

B5 Output flange
Sizes 68-108

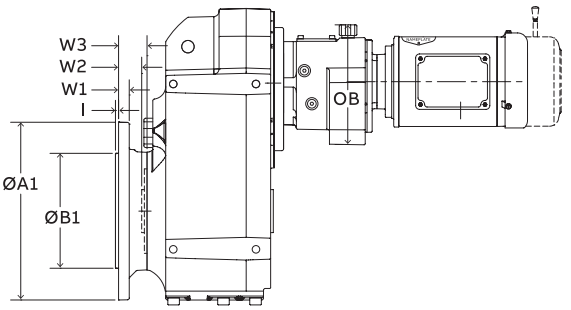

5 Stage reduction

	Mounting dimensions					Outline dimensions									4 stage		5 stage	
	B	G	H	P	Ø S	A	K	E	N	T	J1	X	VP	OD	Q	OB	Q	OB
68	4.41	9.06	5.16	2.36	M12 x 0.67	5.87	6.71	10.39	1.36	16.30	1.02	7.09	5.91	2.56	8.94	7.83	7.01	6.29
88	5.51	11.22	6.62	2.76	M16 x 0.87	7.18	8.45	13.39	1.48	20.39	1.38	8.27	7.09	3.15	11.20	9.84	8.66	8.86
108	6.50	13.78	7.33	3.94	M16 x 0.87	8.09	9.74	14.96	1.79	23.90	1.58	9.45	8.19	3.74	12.93	9.84	10.39	9.84
128	8.07	16.34	8.80	4.72	M20 x 1.06	10.45	11.7	17.72	2.46	28.47	1.97	11.81	10.35	4.33	15.53	11.57	12.46	11.57
148	8.66	18.31	10.08	4.92	M24 x 1.26	12.11	13.74	19.69	2.74	32.41	2.36	13.78	12.21	4.72	17.05	11.57	13.98	11.57
168	10.63	21.06	11.41	5.59	M30 x 1.58	14.25	15.71	23.62	3.13	36.68	2.85	16.14	14.41	5.91	19.29	11.57	16.22	11.57

	B14 mounting dimensions									B5 mounting dimensions								
	Ø A1	Ø B1	Ø E1	Ø S2	I	Ø S3	L1	L2	ß	Ø A1	Ø B1	Ø E1	Ø S2	I	W1	W2	W3	ß
68	6.27	4.33	5.12	M12 x 0.83	0.14	–	–	–	30°	9.84	7.086	8.47	0.53	0.16	0.59	0.91	1.20	30°
88	7.48	5.118	6.50	M12 x 0.83	0.14	–	–	–	30°	11.81	9.055	10.43	0.53	0.16	0.63	1.46	1.79	45°
108	9.65	7.087	8.47	M16 x 1.10	0.16	0.47	1.10	4.06	30°	13.78	9.842	11.81	0.69	0.20	0.71	1.42	1.77	45°
128	11.69	9.055	10.43	M16 x 1.10	0.16	0.47	1.69	4.92	30°	17.71	13.779	15.75	0.69	0.20	0.87	1.63	1.99	22.5°
148	13.15	9.842	11.81	M20 x 1.34	0.20	0.63	1.22	5.71	45°	17.72	13.779	15.75	0.69	0.20	0.87	1.61	2.05	22.5°
168	16.02	11.810	13.78	M20 x 1.34	0.20	0.63	1.46	6.73	45°	21.65	17.716	19.69	0.69	0.20	0.98	2.01	2.44	22.5°

Integral – standard motor dimensions

MW_4GH_
MW_5GH_

Universal mount – straight hollow bore

Four- and five-stage reduction

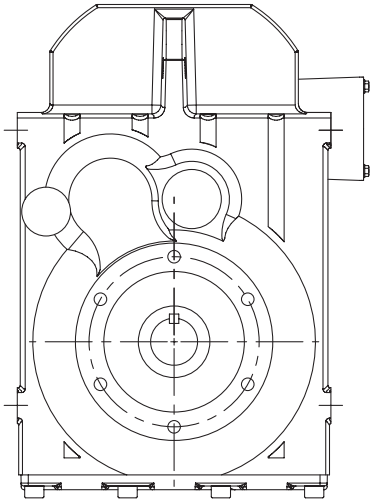

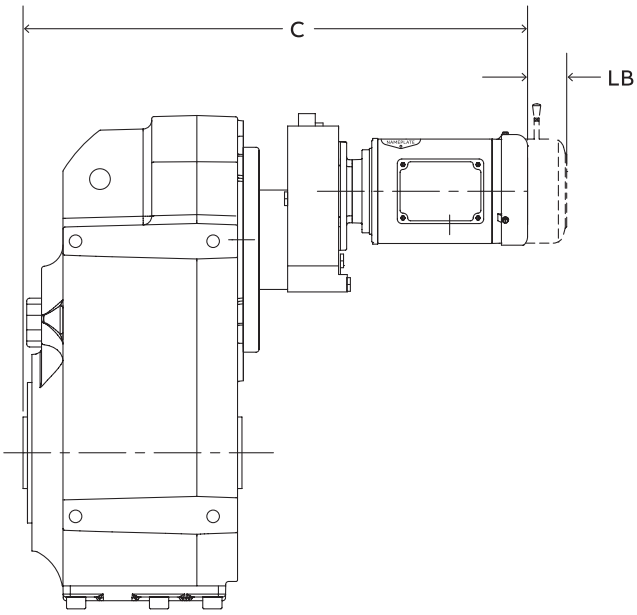

Standard integral motor dimensions 1/4 – 10 Hp

Reducer size	Reducer stage	71C4/71D4/71E4		80F4		80G4		90H4		90I4		100J4		112L4		132M4		132N4	
		C	LB	C	LB	C	LB	C	LB	C	LB	C	LB	C	LB	C	LB	C	LB
68	4	21.58	2.37	21.73	2.11	23.10	1.74	–	–	–	–	–	–	–	–	–	–	–	–
	5	22.76	2.37	–	–	–	–	–	–	–	–	–	–	–	–	–	–	–	–
88	4	23.21	2.37	23.36	2.11	24.73	1.74	24.83	2.62	–	–	–	–	–	–	–	–	–	–
	5	25.64	2.37	–	–	–	–	–	–	–	–	–	–	–	–	–	–	–	–
108	4	26.11	2.37	26.26	2.11	27.63	1.74	27.73	2.62	28.61	1.74	30.57	1.75	32.33	2.51	–	–	–	–
	5	27.07	2.37	–	–	–	–	–	–	–	–	–	–	–	–	–	–	–	–
128	4	27.41	2.37	27.56	2.11	28.93	1.74	29.03	2.62	29.91	1.74	31.87	1.75	33.51	2.51	35.08	6.38	–	–
	5	28.63	2.37	28.78	2.11	–	–	–	–	–	–	–	–	–	–	–	–	–	–
148	4	29.22	2.37	29.37	2.11	30.74	1.74	30.84	2.62	31.72	1.74	33.68	1.75	35.32	2.51	36.89	6.38	–	–
	5	31.82	2.73	31.97	2.11	33.34	1.74	–	–	–	–	–	–	–	–	–	–	–	–
168	4	31.59	2.73	31.74	2.11	33.11	1.74	33.21	2.62	34.09	1.74	36.05	1.75	37.69	2.51	39.26	6.38	–	–
	5	33.96	2.73	34.11	2.11	35.48	1.74	35.58	2.62	–	–	–	–	–	–	–	–	–	–

Integral – washdown motor dimensions

MW_4GH_
MW_5GH_

Universal mount – straight hollow bore

Four- and five-stage reduction

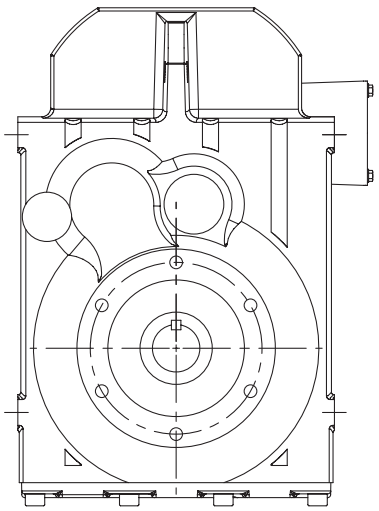

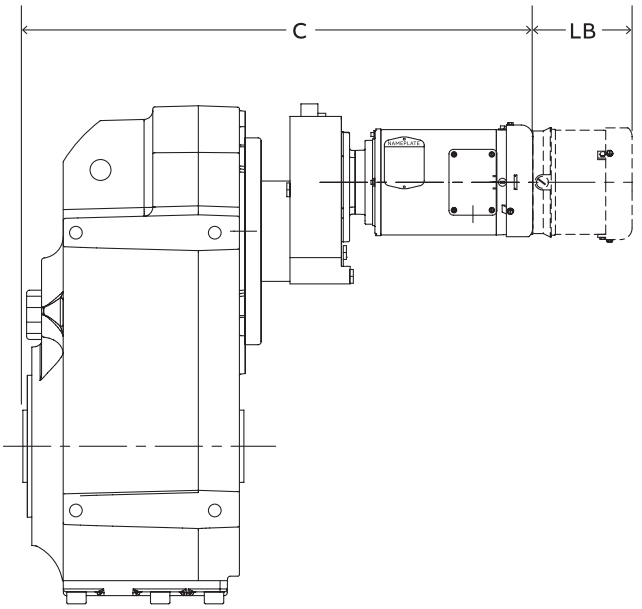

Washdown integral motor dimensions 1/2 – 10 Hp

Reducer size	Reducer stage	71E4		80F4		80G4		90H4		90I4		100J4		112L4		132M4		132N4	
		C	LB	C	LB	C	LB	C	LB	C	LB	C	LB	C	LB	C	LB	C	LB
68	4	22.20	4.81	22.10	4.81	23.10	3.81	–	–	–	–	–	–	–	–	–	–	–	–
	5	23.38	4.81	–	–	–	–	–	–	–	–	–	–	–	–	–	–	–	–
88	4	23.83	4.81	23.73	4.81	24.73	3.81	24.83	5.26	–	–	–	–	–	–	–	–	–	–
	5	26.26	4.81	–	–	–	–	–	–	–	–	–	–	–	–	–	–	–	–
108	4	26.73	4.81	26.63	4.81	27.63	3.81	27.73	5.26	28.61	5.26	31.96	6.24	32.33	5.26	–	–	–	–
	5	27.69	4.81	–	–	–	–	–	–	–	–	–	–	–	–	–	–	–	–
128	4	28.03	4.81	27.93	4.81	28.93	3.81	29.03	5.26	29.91	5.26	33.26	6.24	33.51	5.26	35.08	8.44	–	–
	5	29.25	4.81	29.15	4.81	–	–	–	–	–	–	–	–	–	–	–	–	–	–
148	4	29.84	4.81	29.74	4.81	30.74	3.81	30.84	5.26	31.72	5.26	35.07	6.24	35.32	5.26	36.89	8.44	–	–
	5	32.44	4.81	32.34	4.81	33.34	3.81	–	–	–	–	–	–	–	–	–	–	–	–
168	4	32.21	4.81	32.11	4.81	33.11	3.81	33.21	5.26	34.09	5.26	37.44	6.24	37.69	5.26	39.26	8.44	–	–
	5	34.58	4.81	34.48	4.81	35.48	3.81	35.58	5.26	–	–	–	–	–	–	–	–	–	–

Optional shaft dimensions

Solid shaft

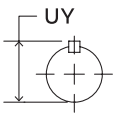

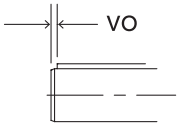

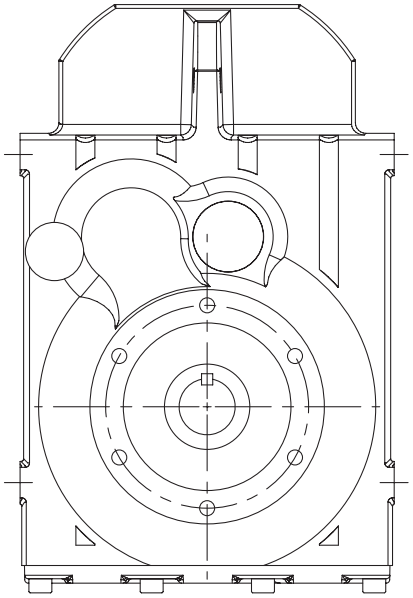

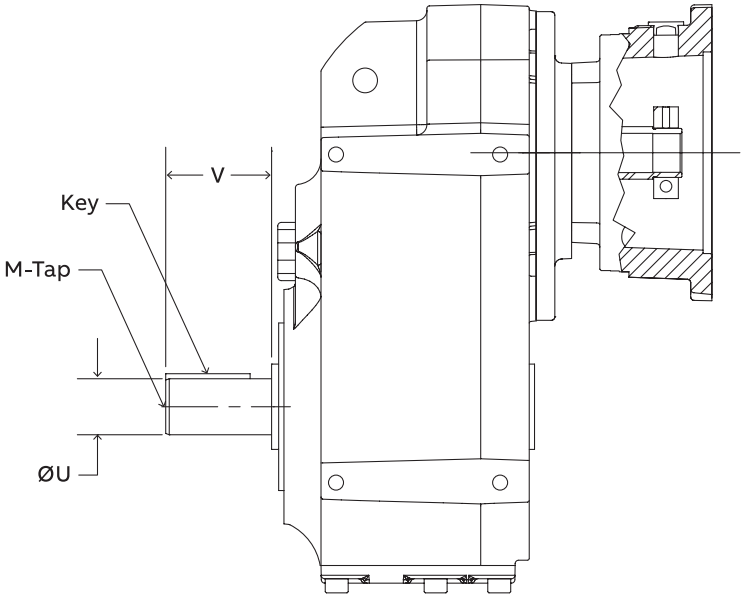

	Optional inch output shaft						Optional metric output shaft (dimensions in mm)						
	Ø U	Tol.	UY	V	Key	M–Tap	Ø U	Tol.	UY	V	Vo	Key	M–Tap
MW38	1.375	+0.0000 +0.0005	1.52	2.76	5/16 x 5/16 x 2–3/8	3/8–16 UNC X 0.87	35	+0.018 +0.002	38	70	5	10 x 8 x 56	M12 x 28
MW48	1.625	+0.0000 +0.0010	1.80	3.15	3/8 x 3/8 x 2–5/8	5/8–11 UNC X 1.42	40	+0.018 +0.002	43	80	5	12 x 8 x 70	M16 x 36
MW68	2.000	+0.0000 +0.0010	2.22	3.94	1/2 x 1/2 x 3–1/4	3/4–10 UNC X 1.65	50	+0.018 +0.002	54	100	10	14 x 9 x 80	M16 x 36
MW88	2.750	+0.0000 +0.0010	3.03	5.51	5/8 x 5/8 x 4–9/16	3/4–10 UNC X 1.65	70	+0.030 +0.011	75	140	15	20 x 12 x 110	M20 x 42
MW108	3.1875	+0.0000 +0.0010	3.52	6.69	3/4 x 3/4 x 5–3/8	3/4–10 UNC X 1.65	80	+0.030 +0.011	85	170	20	22 x 14 x 125	M20 x 42
MW128	3.625	+0.0000 +0.0010	4.01	6.69	7/8 x 7/8 x 5–5/8	1–8 UNC X 1.97	90	+0.035 +0.013	95	170	15	25 x 14 x 140	M24 x 50
MW148	4.000	+0.0000 +0.0010	4.44	8.27	1 x 1 x 7–1/8	1–8 UNC X 1.97	100	+0.035 +0.013	106	210	15	28 x 16 x 180	M24 x 50
MW168	4.750	+0.0000 +0.0010	5.30	8.27	1–1/4 x 1–1/4 x 7	1–8 UNC X 1.97	120	+0.035 +0.013	127	210	15	32 x 18 x 180	M24 x 50

Optional shaft dimensions

Straight hollow bore

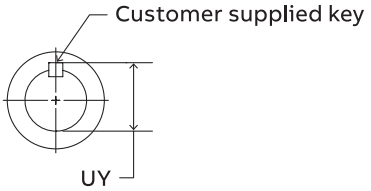

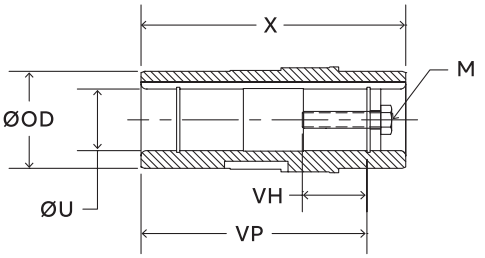

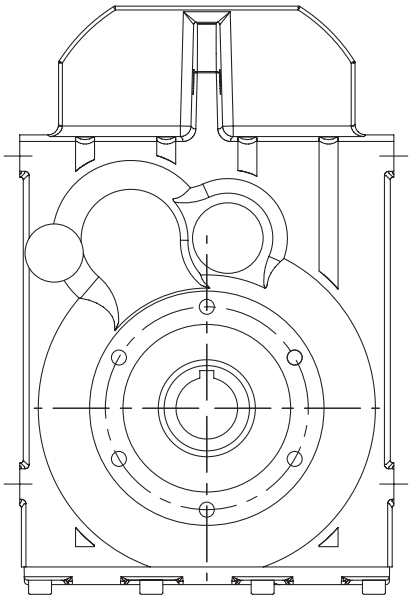

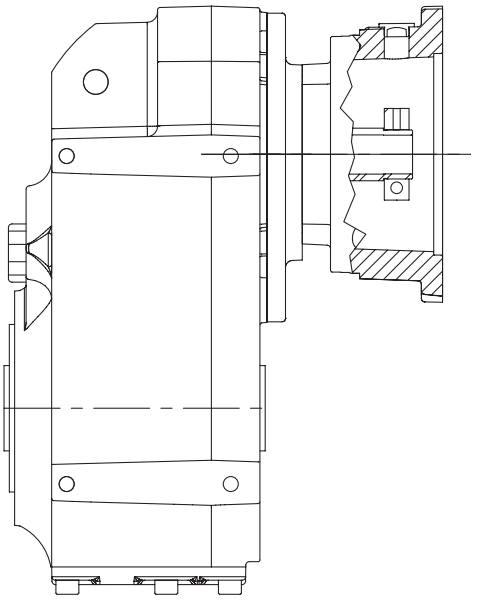

	Optional inch hollow output						Optional metric hollow output					
	Ø U	Tol.	UY	VH	Key	M–Tap	Ø U	Tol.	UY	VH	Key	M–Tap
MW48	–	–	–	–	–	–	40	+0.025 +0.009	43.3	48	12 x 8 x 50	M16 x 60
MW68	1.4375	+0.0010 +0.0004	1.62	1.98	3/8 x 3/8 x 3–3/8	3/8–16 X 2–1/4 UNC	45	+0.025 +0.009	49	50	14 x 9 x 70	M16 x 60
MW88	1.9375	+0.0012 +0.0004	2.17	1.89	1/2 x 1/2 x 3–7/16	5/8–11 X 2–1/4 UNC	60	+0.029 +0.010	64	58	18 x 11 x 100	M20 x 70
MW108	2.4375	+0.0012 +0.0004	2.72	2.51	5/8 x 5/8 x 4	3/4–10 X 3 UNC	70	+0.029 +0.010	75	67	20 x 12 x 110	M20 x 80
MW128	2.9375	+0.0012 +0.0004	3.28	2.31	3/4 x 3/4 x 4–7/8	3/4–10 X 3 UNC	80	+0.029 +0.010	85	67	22 x 14 x 125	M20 x 85
MW148	3.4375	+0.0014 +0.0005	3.70	2.29	7/8 x 3/4 x 7–7/16	1–8 X 2–1/2 UNC	90	+0.034 +0.012	95	77	25 x 14 x 140	M24 x 95
MW168	3.9375	+0.0014 +0.0005	4.39	2.13	1 x 1 x 6	1–8 X 2–1/2 UNC	110	+0.034 +0.012	116	78	28 x 16 x 160	M24 x 100

Twin-tapered bushings

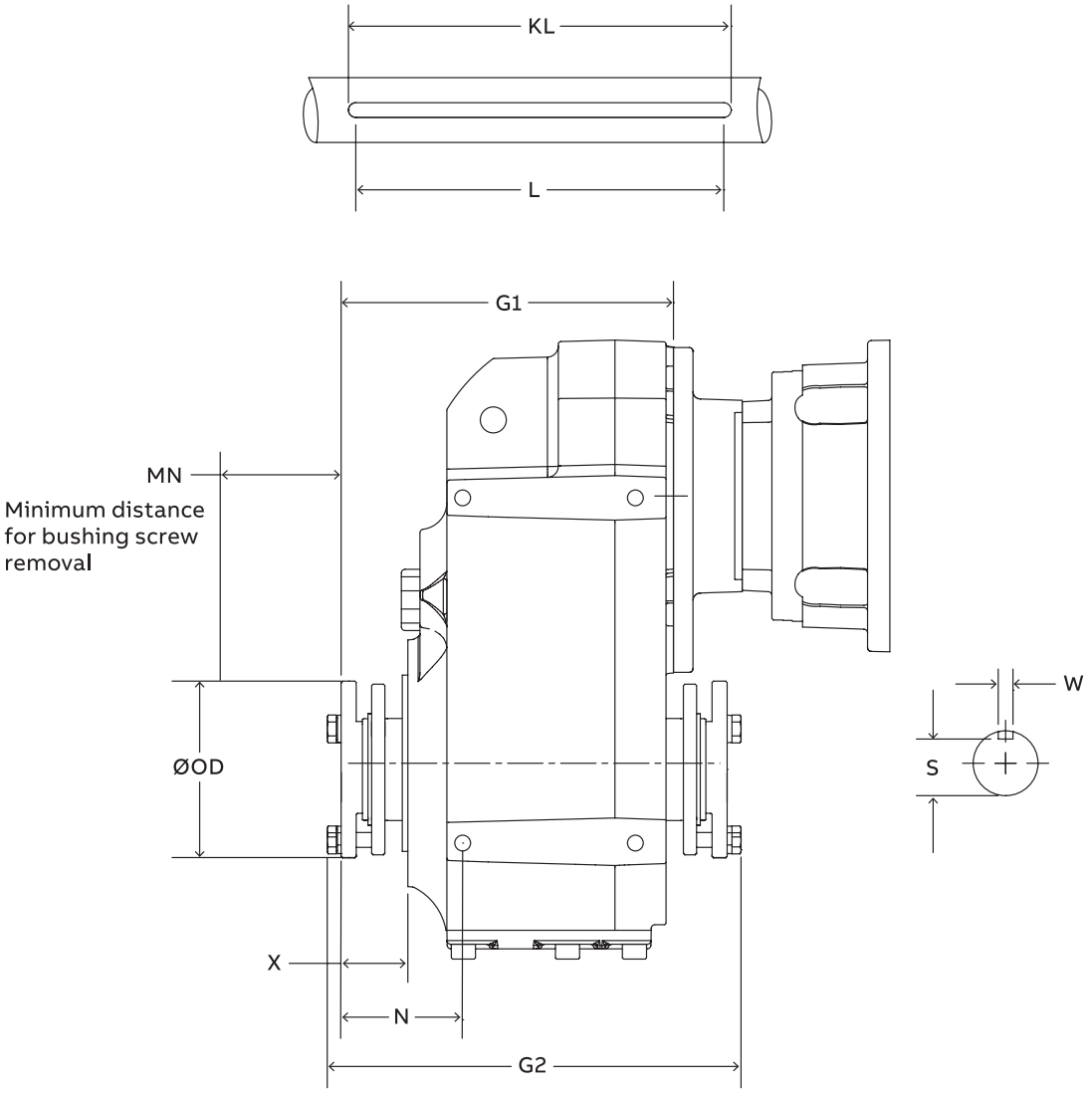

	MSM gearcase dimensions					
	Ø OD	MN	N	X	G1	G2
38	2.91	1.3	2.09	1.36	6.26	7.05
48	3.75	1.3	2.58	1.42	7.56	8.78
58	3.75	1.3	2.68	1.42	7.75	9.52
68	3.96	1.5	2.68	1.62	8.04	10.42
88	4.88	1.5	2.78	1.64	9.75	11.57
108	5.50	1.5	3.12	1.69	11.07	12.80
128	6.38	1.9	4.22	2.12	13.53	16.37
148	6.50	1.9	4.47	2.17	15.48	18.23
168	7.75	2.1	5.15	2.45	17.75	21.06

Twin-tapered bushings

MSM Size 38

Part number	MSM size 38	Bore	Weight (lb)	L (4)	Part number	MSM size 38	Bore	Weight (lb)	L (4)	Shaft keyseat W	Shaft keyseat S	Shaft keyseat KL (3)
094601	Special (5)	1.4375"	2.0		–	–	–	–	–			
093105	Standard (1)	1.3750"	2.0		–	–	–	–	–	0.3125"	1.201"	
093106	Standard	1.3125"	2.0		–	–	–	–	–	0.3125"	1.137"	
093107	Standard	1.2500"	2.4		–	–	–	–	–	0.250"	1.112"	
093108	Standard	1.1875"	2.0		**093115**	Short Shaft (2)	1.1875"	2.0		0.250"	1.049"	
093109	Standard	1.1250"	2.0	6.75"	**093116**	Short Shaft	1.1250"	2.0	5.1875"	0.250"	0.986"	7.00"
093110	Standard	1.0000"	2.0		**093117**	Short Shaft	1.0000"	2.0		0.250"	0.859"	
093111	Standard	35 MM	2.0		–	–	–	–	–	10 mm	30 mm	
093112	Standard	32 MM	2.0		–	–	–	–	–	10 mm	27 mm	
093113	Standard	30 MM	2.0		**093118**	Short Shaft	30 MM	2.0	5.1875"	8 mm	26 mm	
093114	Standard	25 MM	2.0		**093119**	Short Shaft	25 MM	2.0		8 mm	21 mm	

MSM Size 48

Part number	MSM size 48	Bore	Weight (lb)	L (4)	Part number	MSM size 48	Bore	Weight (lb)	L (4)	Shaft keyseat W	Shaft keyseat S	Shaft keyseat KL (3)
092593	Standard (1)	1.5000"	3.3		–	–	–	–	–	0.375"	1.289"	
092594	Standard	1.4375"	3.6		**092607**	Short Shaft (2)	1.4375"	3.7		0.375"	1.225"	
092595	Standard	1.3750"	3.5		**092608**	Short Shaft	1.3750"	4.1		0.3125"	1.201"	
092596	Standard	1.3125"	3.8		**092609**	Short Shaft	1.3125"	4.0		0.3125"	1.137"	
092597	Standard	1.2500"	3.7		**092610**	Short Shaft	1.2500"	4.1	5.6875"	0.250"	1.112"	
092598	Standard	1.1875"	3.8		**092611**	Short Shaft	1.1875"	4.2		0.250"	1.049"	
092599	Standard	1.1250"	4.0	7.875"	**092612**	Short Shaft	1.1250"	4.4		0.250"	0.986"	8.1875"
092600	Standard	1.0625"	4.0		**092613**	Short Shaft	1.0625"	4.5		0.250"	0.923"	
092601	Standard	1.0000"	4.2		**092614**	Short Shaft	1.0000"	4.7		0.250"	0.859"	
092602	Standard	40 MM	3.3		–	–	–	–	–	12 mm	35 mm	
092603	Standard	38 MM	3.3		–	–	–	–	–	12 mm	33 mm	
092604	Standard	35 MM	3.6		**092615**	Short Shaft	35 MM	3.9		10 mm	30 mm	
092605	Standard	32 MM	3.8		**092616**	Short Shaft	32 MM	4.2	5.6875"	10 mm	27 mm	
092606	Standard	30 MM	3.8		**092617**	Short Shaft	30 MM	4.3		10 mm	25 mm	

MSM Size 58

Part number	MSM size 48	Bore	Weight (lb)	L (4)	Part number	MSM size 48	Bore	Weight (lb)	L (4)	Shaft keyseat W	Shaft keyseat S	Shaft keyseat KL (3)
092593	Standard (1)	1.5000"	3.3		–	–	–	–	–	0.375"	1.289"	
092594	Standard	1.4375"	3.6		**092607**	Short Shaft (2)	1.4375"	3.7		0.375"	1.225"	
092595	Standard	1.3750"	3.5		**092608**	Short Shaft	1.3750"	4.1		0.3125"	1.201"	
092596	Standard	1.3125"	3.8		**092609**	Short Shaft	1.3125"	4.0		0.3125"	1.137"	
092597	Standard	1.2500"	3.7		**092610**	Short Shaft	1.2500"	4.1	5.6875"	0.250"	1.112"	
092598	Standard	1.1875"	3.8		**092611**	Short Shaft	1.1875"	4.2		0.250"	1.049"	
092599	Standard	1.1250"	4.0	7.875"	**092612**	Short Shaft	1.1250"	4.4		0.250"	0.986"	8.1875"
092600	Standard	1.0625"	4.0		**092613**	Short Shaft	1.0625"	4.5		0.250"	0.923"	
092601	Standard	1.0000"	4.2		**092614**	Short Shaft	1.0000"	4.7		0.250"	0.859"	
092602	Standard	40 MM	3.3		–	–	–	–	–	12 mm	35 mm	
092603	Standard	38 MM	3.3		–	–	–	–	–	12 mm	33 mm	
092604	Standard	35 MM	3.6		**092615**	Short Shaft	35 MM	3.9		10 mm	30 mm	
092605	Standard	32 MM	3.8		**092616**	Short Shaft	32 MM	4.2	5.6875"	10 mm	27 mm	
092606	Standard	30 MM	3.8		**092617**	Short Shaft	30 MM	4.3		10 mm	25 mm	

(1) – Standard Shaft Bushing Kit includes two standard bushings with two back–up plates and snap rings; hardware and key
(2) – Short Shaft Bushing Kit includes one standard bushing, one long bushing with insertable wedge; two back–up plates with snap rings; hardware and key
(3) – Standard key provided for Short Shaft Kit. Key will overhang customer shaft within bore.
(4) – L dimension is the minium required shaft length. Tolerance on customer shaft is nominal 0.0100" undersize on inch shaft, and nominal to 0.25 mm undersize on metric shaft.
(5) – 094601 Bushing requires special tapered hub. Please contact engineering to confirm if bushing will work for selected reducer.
Note: The B5 Flange can not be used in combination with the tapered hollow bore output due to the flange interfering with the Twin-tapered bushings.
(–) – Bore Size not available.

Twin-tapered bushings

MSM Size 68

Part number	MSM size 68	Bore	Weight (lb)	L (4)	Part number	MSM size 68	Bore	Weight (lb)	L (4)	Shaft keyseat W	Shaft keyseat S	Shaft keyseat KL (3)
093121	Standard (1)	1.8750"	5.0		–	–	–	–	–	0.500"	1.591"	
093122	Standard	1.7500"	5.0		–	–	–	–	–	0.375"	1.542"	
093123	Standard	1.6875"	5.0		–	–	–	–	–	0.375"	1.479"	
093124	Standard	1.6250"	5.0		–	–	–	–	–	0.375"	1.416"	
093125	Standard	1.5000"	5.0		**093132**	Short Shaft (2)	1.5000"	5.0		0.375"	1.289"	
093126	Standard	1.4375"	5.0		**093133**	Short Shaft	1.4375"	5.0		0.375"	1.225"	
093127	Standard	1.3750"	5.0		**093134**	Short Shaft	1.3750"	5.0		0.3125"	1.201"	
093128	Standard	1.3125"	5.0		**093135**	Short Shaft	1.3125"	5.0	7.25"	0.3125"	1.137"	
093129	Standard	1.2500"	5.0		**093136**	Short Shaft	1.2500"	5.0		0.250"	1.112"	
093130	Standard	1.1875"	5.0	9.375"	**093137**	Short Shaft	1.1875"	5.0		0.250"	1.049"	9.75"
093131	Standard	1.1250"	5.0		**093138**	Short Shaft	1.1250"	5.0		0.250"	0.986"	
093139	Standard	45 MM	5.0		–	–	–	–	–	14 mm	39.5 mm	
093140	Standard	42 MM	5.0		–	–	–	–	–	12 mm	37 mm	
093141	Standard	40 MM	5.0		**093146**	Short Shaft	40 MM	5.0		12 mm	35 mm	
093142	Standard	38 MM	5.0		**093147**	Short Shaft	38 MM	5.0		12 mm	33 mm	
093143	Standard	35 MM	5.0		**093148**	Short Shaft	35 MM	5.0	7.25"	10 mm	30 mm	
093144	Standard	32 MM	5.0		**093149**	Short Shaft	32 MM	5.0		10 mm	27 mm	
093145	Standard	30 MM	5.0		**093150**	Short Shaft	30 MM	5.0		8 mm	26 mm	

MSM Size 88

Part number	MSM size 88	Bore	Weight (lb)	L (4)	Part number	MSM size 88	Bore	Weight (lb)	L (4)	Shaft keyseat W	Shaft keyseat S	Shaft keyseat KL (3)
092619	Standard (1)	2.3750"	6.1		–	–	–	–	–	0.625"	2.021"	
092620	Standard	2.2500"	6.2		–	–	–	–	–	0.500"	1.893"	
092621	Standard	2.1875"	6.8		**092631**	Short Shaft (2)	2.1875"	7.0		0.500"	1.909"	
092622	Standard	2.1250"	7.0		**092632**	Short Shaft	2.1250"	7.4		0.500"	1.845"	
092623	Standard	2.0000"	7.5		**092633**	Short Shaft	2.0000"	8.0		0.500"	1.718"	
092624	Standard	1.9375"	7.8		**092634**	Short Shaft	1.9375"	8.4		0.500"	1.655"	
092625	Standard	1.8750"	8.0		**092635**	Short Shaft	1.8750"	8.7	7.5625"	0.500"	1.591"	
092626	Standard	1.7500"	8.0		**092636**	Short Shaft	1.7500"	9.0		0.375"	1.542"	
092627	Standard	1.6875"	8.2		**092637**	Short Shaft	1.6875"	9.3		0.375"	1.479"	
092628	Standard	1.6250"	8.4		**092638**	Short Shaft	1.6250"	9.6		0.375"	1.416"	
092629	Standard	1.5000"	8.8	10.50"	**092639**	Short Shaft	1.5000"	9.9		0.375"	1.289"	11.25"
092630	Standard	1.4375"	8.8		**092640**	Short Shaft	1.4375"	10.0		0.375"	1.225"	
092641	Standard	60 MM	6.2		–	–	–	–	–	18 mm	53 mm	
092642	Standard	55 MM	6.8		**092649**	Short Shaft	55 MM	7.1		16 mm	49 mm	
092643	Standard	50 MM	7.5		**092650**	Short Shaft	50 MM	8.1		14 mm	44.5 mm	
092644	Standard	45 MM	8.1		**092651**	Short Shaft	45 MM	9.0		14 mm	39.5 mm	
092645	Standard	42 MM	8.4		**092652**	Short Shaft	42 MM	9.5	7.5625"	12 mm	37 mm	
092646	Standard	40 MM	8.6		**092653**	Short Shaft	40 MM	9.8		12 mm	35 mm	
092647	Standard	38 MM	8.8		**092654**	Short Shaft	38 MM	10.1		12 mm	33 mm	
092648	Standard	35 MM	9.0		**092655**	Short Shaft	35 MM	10.6		10 mm	30 mm	

(1) – Standard Shaft Bushing Kit includes two standard bushings with two back–up plates and snap rings; hardware and key
(2) – Short Shaft Bushing Kit includes one standard bushing, one long bushing with insertable wedge; two back–up plates with snap rings; hardware and key
(3) – Standard key provided for Short Shaft Kit. Key will overhang customer shaft within bore.
(4) – L dimension is the minium required shaft length. Tolerance on customer shaft is nominal 0.0100" undersize on inch shaft, and nominal to 0.25 mm undersize on metric shaft.
Note: The B5 Flange can not be used in combination with the tapered hollow bore output due to the flange interfering with the Twin-tapered bushings.
(–) – Bore Size not available.

Twin-tapered bushings

MSM Size 108

Part number	MSM size 108	Bore	Weight (lb)	L (4)	Part number	MSM size 108	Bore	Weight (lb)	L (4)	Shaft keyseat W	Shaft keyseat S	KL (3)
092871	Standard (1)	2.6875"	9.4		–	–	–	–	–	0.625"	2.338"	
092872	Standard	2.5000"	10.6		–	–	–	–	–	0.625"	2.148"	
092873	Standard	2.4375"	10.8		**092883**	Short Shaft (2)	2.4375"	11.3		0.625"	2.084"	
092874	Standard	2.3750"	11.3		**092884**	Short Shaft	2.3750"	11.8		0.625"	2.021"	
092875	Standard	2.2500"	11.5		**092885**	Short Shaft	2.2500"	12.4		0.500"	1.893"	
092876	Standard	2.1875"	11.5		**092886**	Short Shaft	2.1875"	12.8		0.500"	1.909"	
092877	Standard	2.1250"	12.2		**092887**	Short Shaft	2.1250"	13.3	8.875'	0.500"	1.845"	
092878	Standard	2.0000"	12.6		**092888**	Short Shaft	2.0000"	13.9		0.500"	1.718"	
092879	Standard	1.9375"	13.0		**092889**	Short Shaft	1.9375"	14.3		0.500"	1.655"	
092880	Standard	1.8750"	13.2	11.6875"	**092890**	Short Shaft	1.8750"	14.6		0.500"	1.591"	12.625"
092881	Standard	1.7500"	13.3		**092891**	Short Shaft	1.7500"	15		0.375"	1.542"	
092882	Standard	1.6875"	13.5		**092892**	Short Shaft	1.6875"	15.3		0.375"	1.479"	
092893	Standard	70 MM	9.1		–	–	–	–	–	20 mm	62.5 mm	
092894	Standard	65 MM	10.0		**092649**	Short Shaft	65 MM	10.4		18 mm	58 mm	
092895	Standard	60 MM	11.2		**092650**	Short Shaft	60 MM	11.8		18 mm	53 mm	
092896	Standard	55 MM	12.0		**092651**	Short Shaft	55 MM	13.0	8.875"	16 mm	49 mm	
092897	Standard	50 MM	12.6		**092652**	Short Shaft	50 MM	14.0		14 mm	44.5 mm	
092898	Standard	45 MM	12.6		**092653**	Short Shaft	45 MM	15.1		14 mm	39.5 mm	
092899	Standard	42 MM	13.7		**092654**	Short Shaft	42 MM	15.6		12 mm	37 mm	

MSM Size 128

Part number	MSM size 128	Bore	Weight (lb)	L (4)	Part number	MSM size 128	Bore	Weight (lb)	L (4)	Shaft keyseat W	Shaft keyseat S	KL (3)
092834	Standard (1)	3.1875"	13.7		–	–	–	–	–	0.750"	2.768"	
092835	Standard	3.0000"	15.1		–	–	–	–	–	0.750"	2.577"	
092836	Standard	2.9375"	15.6		**092847**	Short Shaft (2)	2.9375"	16.2		0.750"	2.514"	
092837	Standard	2.8750"	16.1		**092848**	Short Shaft	2.8750"	16.9		0.750"	2.450"	
092838	Standard	2.6875"	16.7		**092849**	Short Shaft	2.6875"	18.1		0.625"	2.338"	
092839	Standard	2.5000"	17.9		**092850**	Short Shaft	2.5000"	19.7		0.625"	2.148"	
092840	Standard	2.4375"	18.1		**092851**	Short Shaft	2.4375"	20.1		0.625"	2.084"	
092841	Standard	2.3750"	18.3		**092852**	Short Shaft	2.3750"	20.5	11.375"	0.625"	2.021"	
092842	Standard	2.2500"	18.9		**092853**	Short Shaft	2.2500"	21.4		0.500"	1.893"	
092843	Standard	2.1875"	19.1	14.875"	**092854**	Short Shaft	2.1875"	21.8		0.500"	1.909"	15.625"
092844	Standard	2.1250"	19.3		**092855**	Short Shaft	2.1250"	22.2		0.500"	1.845"	
092845	Standard	2.0000"	19.9		**092856**	Short Shaft	2.0000"	23		0.500"	1.718"	
092846	Standard	1.9375"	20.1		**092857**	Short Shaft	1.9375"	23.4		0.500"	1.655"	
092858	Standard	80 MM	14.1		–	–	–	–	–	22 mm	71 mm	
092859	Standard	75 MM	15.3		**092865**	Short Shaft	75 MM	15.8		20 mm	67.5 mm	
092860	Standard	70 MM	16.3		**092866**	Short Shaft	70 MM	17.4		20 mm	62.5 mm	
092861	Standard	65 MM	17.5		**092867**	Short Shaft	65 MM	18.9	11.375"	18 mm	58 mm	
092862	Standard	60 MM	18.5		**092868**	Short Shaft	60 MM	21.7		18 mm	53 mm	
092863	Standard	55 MM	19.3		**092869**	Short Shaft	55 MM	22.0		16 mm	49 mm	
092864	Standard	50 MM	19.9		**092870**	Short Shaft	50 MM	23.1		14 mm	44.5 mm	

(1) – Standard Shaft Bushing Kit includes two standard bushings with two back–up plates and snap rings; hardware and key
(2) – Short Shaft Bushing Kit includes one standard bushing, one long bushing with insertable wedge; two back–up plates with snap rings; hardware and key
(3) – Standard key provided for Short Shaft Kit. Key will overhang customer shaft within bore.
(4) – L dimension is the minium required shaft length. Tolerance on customer shaft is nominal 0.0100" undersize on inch shaft, and nominal to 0.25 mm undersize on metric shaft.
(5) – 094601 Bushing requires special tapered hub. Please contact engineering to confirm if bushing will work for selected reducer.
Note: The B5 Flange can not be used in combination with the tapered hollow bore output due to the flange interfering with the Twin-tapered bushings.
(–) – Bore Size not available.

Twin-tapered bushings

MSM Size 148

Part number	MSM size 148	Bore	Weight (lb)	L (4)	Part number	MSM size 148	Bore	Weight (lb)	L (4)	Shaft keyseat W	Shaft keyseat S	Shaft keyseat KL (3)
093033	Standard (1)	3.4375"	16.1	16.75"	**093044**	Short Shaft (2)	3.4375"	16.5	13.1875"	0.875"	2.943"	17.6875"
093034	Standard	3.1875"	17.7		**093045**	Short Shaft	3.1875"	19.0		0.750"	2.768"'	
093035	Standard	3.0000"	19.1		**093046**	Short Shaft	3.0000"	20.9		0.750"	2.577"	
093036	Standard	2.9375"	19.6		**093047**	Short Shaft	2.9375"	21.6		0.750"	2.514"	
093037	Standard	2.8750"	20.1		**093048**	Short Shaft	2.8750"	22.3		0.750"	2.450"	
093038	Standard	2.6875"	20.9		**093049**	Short Shaft	2.6875"	23.7		0.625"	2.338"	
093039	Standard	2.5000"	22.1		**093050**	Short Shaft	2.5000"	25.3		0.625"	2.148"	
093040	Standard	2.4375"	22.3		**093051**	Short Shaft	2.4375"	25.8		0.625"	2.084"	
093041	Standard	2.3750"	22.7		**093052**	Short Shaft	2.3750"	26.3		0.625"	2.021"	
093042	Standard	2.2500"	23.1		**093053**	Short Shaft	2.2500"	26.7		0.500"	1.893"	
093043	Standard	2.1875"	23.3		**093054**	Short Shaft	2.1875"	27.5		0.500"	1.909"	
093055	Standard	90 MM	14.9		–	–	–	–	–	25 mm	81 mm	
093056	Standard	85 MM	16.4		**093062**	Short Shaft	85 MM	17.1	13.1875"	22 mm	76 mm	
093057	Standard	80 MM	18.1		**093063**	Short Shaft	80 MM	19.4		22 mm	71 mm	
093058	Standard	75 MM	19.3		**093064**	Short Shaft	75 MM	21.2		20 mm	71 mm	
093059	Standard	70 MM	20.4		**093065**	Short Shaft	70 MM	23		20 mm	62.5 mm	
093060	Standard	65 MM	21.4		**093066**	Short Shaft	65 MM	24		18 mm	58 mm	
093061	Standard	60 MM	22.6		**093067**	Short Shaft	60 MM	26.3		18 mm	53 mm	

MSM Size 168

Part number	MSM size 168	Bore	Weight (lb)	L (4)	Part number	MSM size 168	Bore	Weight (lb)	L (4)	Shaft keyseat W	Shaft keyseat S	Shaft keyseat KL (3)
093068	Standard (1)	4.4375"	20.5	19.6875"	–	–	–	–	–	1.000"	3.880"	20.5625"
093069	Standard	4.1875"	23.5		–	–	–	–	–	1.000"	3.627"	
093070	Standard	3.9375"	26.3		**093079**	Short Shaft (2)	3.9375"	26.7	16.00"	1.000"	3.373"	
093071	Standard	3.4375"	30.9		**093080**	Short Shaft	3.4375"	34.2		0.875"	2.943"	
093072	Standard	3.1875"	32.6		**093081**	Short Shaft	3.1875"	36.7		0.750"	2.768"	
093073	Standard	3.0000"	34.0		**093082**	Short Shaft	3.0000"	38.8		0.750"	2.577"	
093074	Standard	2.9375"	34.6		**093083**	Short Shaft	2.9375"	39.6		0.750"	2.514"	
093075	Standard	2.8750"	35.0		**093084**	Short Shaft	2.8750"	40.2		0.750"	2.450"	
093076	Standard	2.6875"	35.8		**093085**	Short Shaft	2.6875"	41.7		0.625"	2.338"	
093077	Standard	2.5000"	37.2		**093086**	Short Shaft	2.5000"	43.6		0.625:	2.148"	
093078	Standard	2.4375"	37.4		**093087**	Short Shaft	2.4375"	44.1		0.625"	2.084"	
093088	Standard	110 MM	21.4		–	–	–	–	–	28 mm	100 mm	
093089	Standard	100 MM	25.9		**093097**	Short Shaft	100 MM	27.1	16.00"	28 mm	90 mm	
093090	Standard	95 MM	27.8		**093098**	Short Shaft	95 MM	29.8		25 mm	86 mm	
093091	Standard	90 MM	29.7		**093099**	Short Shaft	90 MM	32.5		25 mm	81 mm	
093092	Standard	85 MM	31.1		**093100**	Short Shaft	85 MM	24.6		22 mm	76 mm	
093093	Standard	80 MM	32.7		**093101**	Short Shaft	80 MM	37.0		22 mm	71 mm	
093094	Standard	75 MM	33.9		**093102**	Short Shaft	75 MM	39.0		20 mm	71 mm	
093095	Standard	70 MM	35.3		**093103**	Short Shaft	70 MM	41.1		20 mm	62.5 mm	
093096	Standard	65 MM	36.5		**093104**	Short Shaft	65 MM	42.8		18 mm	58 mm	

(1) – Standard Shaft Bushing Kit includes two standard bushings with two back–up plates and snap rings; hardware and key
(2) – Short Shaft Bushing Kit includes one standard bushing, one long bushing with insertable wedge; two back–up plates with snap rings; hardware and key
(3) – Standard key provided for Short Shaft Kit. Key will overhang customer shaft within bore.
(4) – L dimension is the minium required shaft length. Tolerance on customer shaft is nominal 0.0100" undersize on inch shaft, and nominal to 0.25 mm undersize on metric shaft.
Note: The B5 Flange can not be used in combination with the tapered hollow bore output due to the flange interfering with the Twin-tapered bushings.
(–) – Bore Size not available.

Screw conveyor adapter

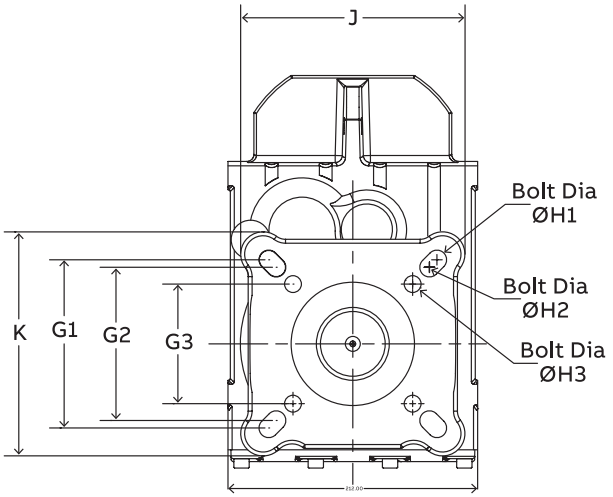

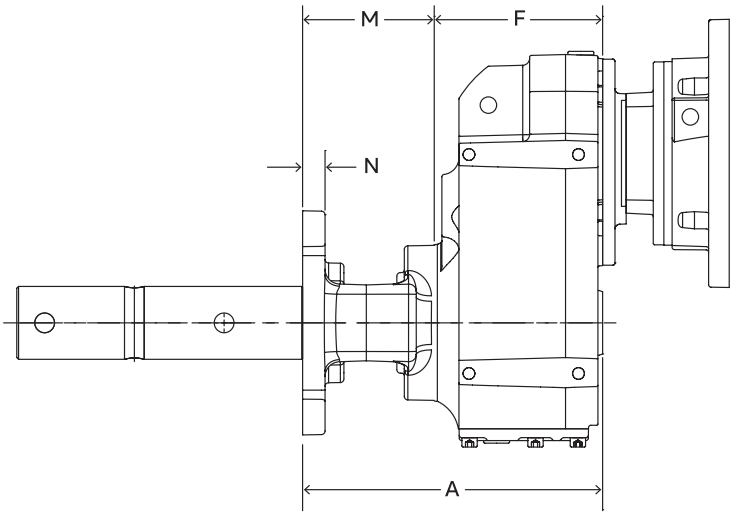

CEMA screw conveyor adapters

	Standard adapter assembly	Weight	Severe duty package	Weight	A	F	M	N	J	K	G1	ØH1	G2	ØH2	G3	ØH3	Thrust* load (lb)
38	**091698**	14.0	**091699**	1.0	8.92	4.90	4.33	0.50	7.50	7.50	5.63	5/8	5.13	5/8	4.00	1/2	1300
48	**091700**	14.7	**091701**	1.5	10.03	5.63	4.40	0.75	7.50	7.50	5.63	5/8	5.13	5/8	4.00	1/2	3400
58	**091702**	17.7	**091703**	1.5	10.68	6.33	4.42	0.75	8.50	8.20	6.00	3/4	5.13	5/8	4.00	1/2	3067
68	**091702**	17.7	**091703**	1.5	11.21	6.42	4.42	0.75	8.50	8.20	6.00	3/4	5.13	5/8	4.00	1/2	3067
88	**091704**	17.7	**091705**	2.3	13.67	8.11	5.74	0.75	9.60	8.75	6.00	3/4	5.13	5/8	–	–	4000
108	**091706**	45.5	**091707**	2.1	14.91	9.39	5.76	0.75	12.06	9.75	6.75	7/8	6.00	3/4	5.13	5/8	4667
128	**091708**	75.23	**091709**	3.1	18.27	11.42	6.76	0.75	14.30	12.13	6.75	7/8	6.00	3/4	5.13	5/8	6000

Notes: Screw Conveyor option is for use with the standard inch straight hollow bore shaft.
Refer to gear case dimesional pages for dimensions and input options.
Severe Duty option includes packing retainer, stud and nut and a braided felt seal.
*Max thrust load at the output bearings.

Screw conveyor adapter

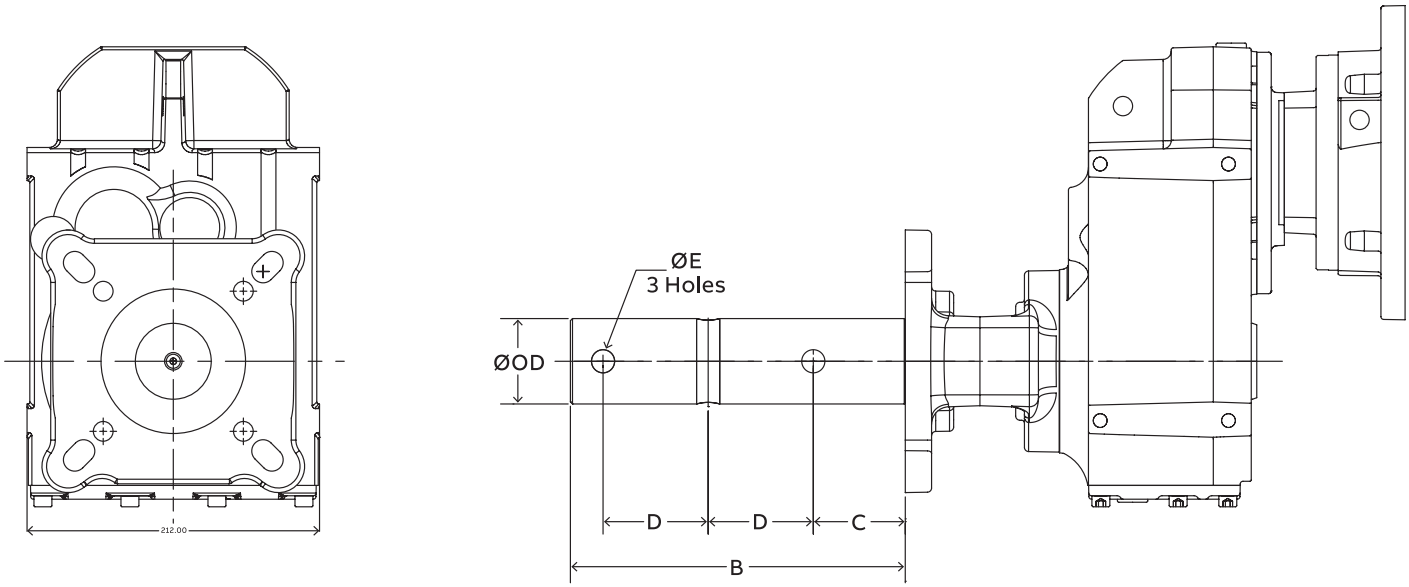

CEMA screw conveyor drive shafts

	Drive shaft	Screw diameter	Part number	Ø OD	B	C	D	Ø E	Weight
38	1–1/2 Standard	6"–9"	**091583**	1.50	9.00	2.13	3.00	0.53	8.0
	2 Standard	9"–12"	**095303**	2.00	9.00	2.13	3.00	0.66	11.0
	2–7/16 Standard	12"–14"	**095304**	2.4375	9.69	2.75	3.00	0.66	15.8
48	1–1/2 Standard	6"–9"	**091585**	1.50	9.00	2.13	3.00	0.53	9.4
	2 Standard	9"–12"	**091587**	2.00	9.00	2.13	3.00	0.66	12.8
	2–7/16 Standard	12"–14"	**095305**	2.4375	9.69	2.75	3.00	0.66	17.1
58	1–1/2 Standard	6”–9”	**083187**	1.50	9.00	2.13	3.00	0.53	9.4
	2 Standard	9”–12”	**083138**	2.00	9.00	2.13	3.00	0.66	12.8
68	1–1/2 Standard	6"–9"	**091589**	1.50	9.00	2.13	3.00	0.53	10.5
	2 Standard	9"–12"	**091591**	2.00	9.00	2.13	3.00	0.66	13.8
	2–7/16 Standard	12"–14"	**091593**	2.4375	9.69	2.75	3.00	0.66	18.6
	3 Standard	12"–20"	**095306**	3.00	9.87	2.87	3.00	0.78	24.5
88	2 Standard	9"–12"	**091597**	2.00	9.00	2.13	3.00	0.66	22.3
	2–7/16 Standard	12"–14"	**091599**	2.4375	9.69	2.75	3.00	0.66	27.1
	3 Standard	12"–20"	**091601**	3.00	9.87	2.87	3.00	0.78	33.7
108	2 Standard	9"–12"	**091603**	2.00	9.00	2.13	3.00	0.66	27.2
	2–7/16 Standard	12"–14"	**091605**	2.4375	9.69	2.75	3.00	0.66	32.1
	3 Standard	12"–20"	**091607**	3.00	9.87	2.87	3.00	0.78	38.8
	3–7/16" Standard	18"–20"	**095308**	3.4375	13.13	3.87	4.00	0.91	52.0
128	2 Standard	9"–12"	**091609**	2.00	9.00	2.13	3.00	0.66	43.4
	2–7/16 Standard	12"–14"	**091611**	2.4375	9.69	2.75	3.00	0.66	48.2
	3 Standard	12"–20"	**091613**	3.00	9.87	2.87	3.00	0.78	54.9
	3–7/16" Standard	18"–20"	**091615**	3.4375	13.13	3.87	4.00	0.91	69.4

Note: Screw Conveyor option is for use with the standard inch straight hollow bore shaft.

Metric shrink disk

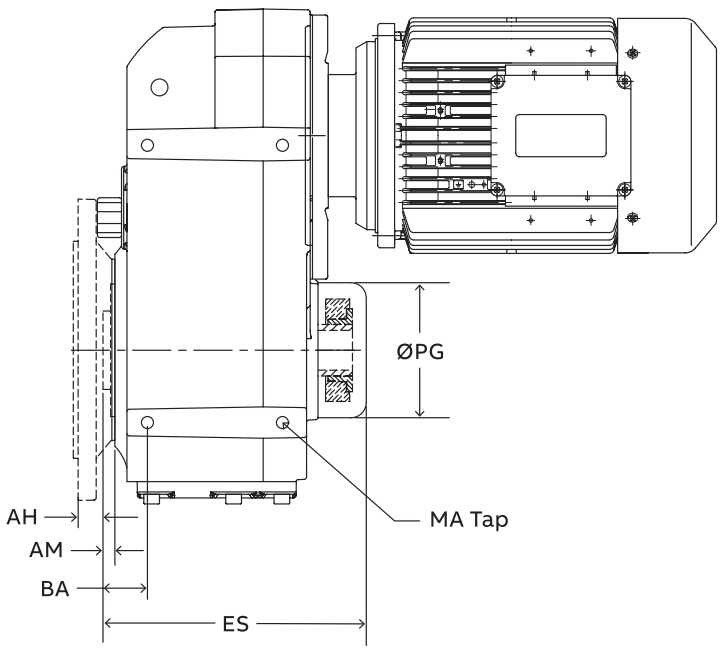

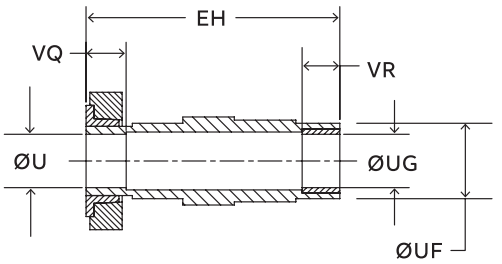

Customer shaft

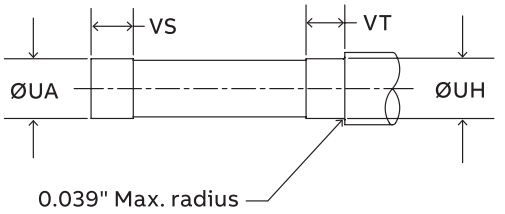

Dimension – inch/mm

Unit size	AM	BA	AH	ES	MA	ØPG	EH	ØU	Tol.	ØUA	Tol.	ØUF	ØUG	Tol.	ØUH	Tol.	VQ	VR	VS	VT
MW38	0.24	0.98	0.94	6.06	–	3.03	5.75	–	–	–	–	1.77	–	–	–	–	0.87	0.79	1.06	0.98
	6	25	24	154	M8	77	146	30	+0.021 −0.000	30	+0.000 −0.013	45	30	+0.021 −0.000	30	+0.000 −0.013	22	20	27	25
MW48	0.28	1.46	0.98	7.24	–	3.66	6.97	–	–	–	–	2.17	–	–	–	–	0.98	0.79	1.18	0.98
	7	37	25	184	M10	93	177	40	+0.025 −0.000	40	+0.000 −0.016	55	40	+0.025 −0.000	40	+0.000 −0.016	25	20	30	25
MW68	0.30	1.38	0.91	8.50	–	4.41	8.23	–	–	–	–	2.56	–	–	–	–	1.06	0.79	1.26	0.98
	7.5	35	23	216	M12	112	209	50	+0.025 −0.000	50	+0.000 −0.016	65	50	+0.025 −0.000	50	+0.000 −0.016	27	20	32	25
MW88	0.33	1.46	1.46	9.80	–	5.2	9.49	–	–	–	–	3.15	–	–	–	–	1.14	1.18	1.34	1.38
	8.5	37	37	249	M16	132	241	60	+0.030 −0.000	60	+0.000 −0.019	80	60	+0.030 −0.000	60	+0.000 −0.019	29	30	34	35
MW108	0.35	1.81	1.42	11.34	–	5.67	11.02	–	–	–	–	3.74	–	–	–	–	1.18	1.57	1.38	1.77
	9	46	36	288	M16	144	280	70	+0.030 −0.000	70	+0.000 −0.019	95	70	+0.030 −0.000	70	+0.000 −0.019	30	40	35	45
MW128	0.35	2.48	1.65	14.06	–	7.09	13.58	–	–	–	–	4.33	–	–	–	–	1.57	1.97	1.77	2.17
	9	63	42	357	M20	180	345	80	+0.030 −0.000	80	+0.000 −0.019	110	80	+0.030 −0.000	80	+0.000 −0.019	40	50	45	55
MW148	0.43	2.76	1.61	16.46	–	8.27	15.91	–	–	–	–	4.72	–	–	–	–	1.93	2.36	2.13	2.56
	11	70	41	418	M24	210	404	95	+0.035 −0.000	95	+0.000 −0.022	120	95	+0.035 −0.000	95	+0.000 −0.022	49	60	54	65
MW168	0.43	3.15	2.01	19.53	–	9.33	19.02	–	–	–	–	5.91	–	–	–	–	2.13	2.76	2.32	2.95
	11	80	51	496	M30	237	483	105	+0.035 −0.000	105	+0.000 −0.022	150	105	+0.035 −0.000	105	+0.000 −0.022	54	70	59	75

See Eng-15 for shrink disc installation instructions.

Q-Loc bushing dimensions

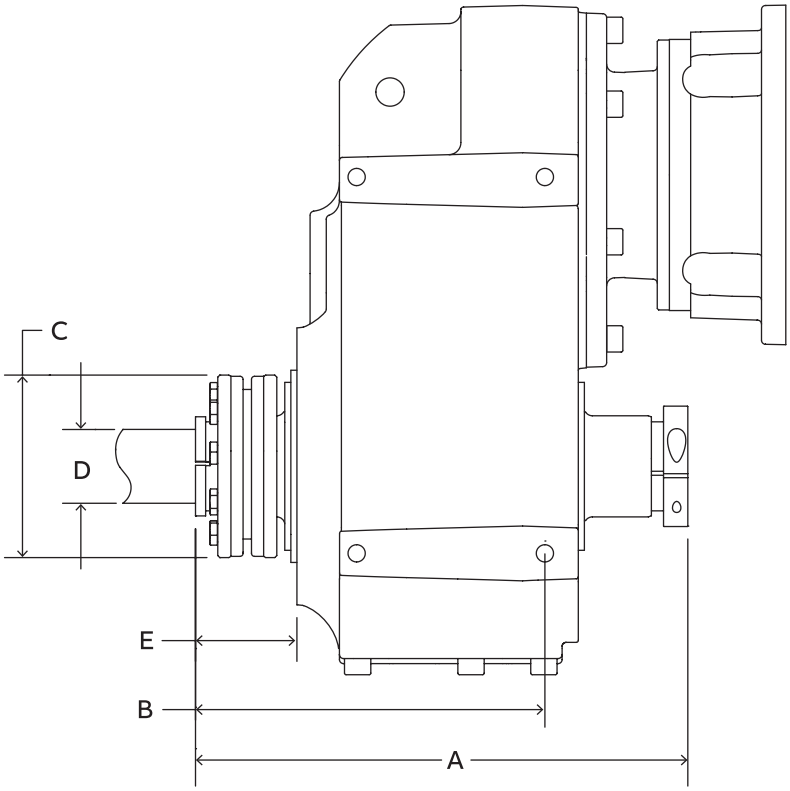

Reducer size	Bore	D (Minimum shaft diameter allowed)	Bushing part number	A	B	C	E
38	1.000	0.995	**095383**	8.2	5.6	2.9	1.8
48	1.000	0.995	**095398**	9.6	6.8	3.6	2
	1.125	1.120	**095399**				
	1.250	1.244	**095400**				
	1.375	1.369	**095401**				
	1.4375	1.431	**095402**				
58	1.1875	1.183	**084546**	10.3	7.3	4.0	2.0
	1.2500	1.244	**084549**				
	1.3750	1.369	**084557**				
	1.4375	1.431	**084635**				
	1.5000	1.494	**084638**				
68	1.250	1.244	**095428**	11.1	7.6	4.4	2.2
	1.375	1.369	**095429**				
	1.4375	1.431	**095430**				
	1.625	1.619	**095431**				
	1.6875	1.681	**095432**				
88	1.4375	1.432	**095473**	12.2	8.8	5.5	2.2
	1.625	1.619	**095474**				
	1.6875	1.681	**095475**				
	1.9375	1.931	**095476**				
	2.000	1.993	**095477**				
108	1.9375	1.931	**095503**	13.5	10.2	5.8	2.3
	2.000	1.993	**095504**				
	2.1875	2.180	**095505**				
	2.4375	2.430	095506				

Note: See Eng-13 for Q-Loc installation instructions.

Thermal Ratings

Thermal ratings – MSM 38

The Thermal Hp Ratings shown in the table below are based on an ambient temperature of 68°F, continuous operation, and fan cooled motors, as well as with the standard ISO VG220 factory filled lubricant. If using a different lubricant, please contact Application Engineering. Darker shaded values indicate that the unit is thermally limited.

Ratio	1750 RPM							3450 RPM						
	Output speed	Rated power	Mounting position					Output speed	Rated power	Mounting position				
			A1	A2	A3	A4	A5, A6			A1	A2	A3	A4	A5, A6
	RPM	Hp	Hp	Hp	Hp	Hp	Hp	RPM	Hp	Hp	Hp	Hp	Hp	Hp
9.80	**178.6**	**7.45**	19.7	19.7	19.7	19.5	19.8	**352.2**	**11.19**	18.9	18.4	18.8	18.3	19.4
11.39	**153.6**	**6.91**	18.9	18.9	18.9	18.8	19.0	**302.8**	**10.37**	18.8	18.4	18.7	18.3	19.1
12.64	**138.5**	**6.42**	17.9	17.8	17.9	17.8	17.9	**272.9**	**9.83**	18.1	17.8	18.0	17.7	18.4
13.76	**127.1**	**5.89**	18.1	18.1	18.2	18.1	18.2	**250.6**	**9.39**	18.6	18.4	18.6	18.3	18.9
15.39	**113.7**	**5.27**	17.1	17.1	17.1	17.0	17.1	**224.1**	**8.83**	17.8	17.6	17.7	17.5	18.0
16.83	**104.0**	**4.82**	16.3	16.3	16.3	16.2	16.3	**205.0**	**8.40**	17.1	17.0	17.1	16.9	17.3
18.47	**94.7**	**4.39**	15.6	15.6	15.6	15.5	15.6	**186.8**	**7.96**	16.5	16.5	16.5	16.4	16.7
20.37	**85.9**	**3.98**	15.0	15.0	15.0	14.9	15.0	**169.4**	**7.53**	16.0	16.0	16.0	15.9	16.1
22.58	**77.5**	**3.59**	14.1	14.1	14.1	14.1	14.2	**152.8**	**7.08**	15.2	15.2	15.2	15.2	15.4
25.58	**68.4**	**3.17**	13.7	13.7	13.7	13.7	13.7	**134.9**	**6.25**	14.9	14.9	15.0	14.9	15.0
28.22	**62.0**	**2.87**	12.6	12.6	12.6	12.6	12.6	**122.2**	**5.66**	13.8	13.8	13.9	13.8	13.9
31.91	**54.8**	**2.54**	11.5	11.5	11.5	11.5	11.5	**108.1**	**5.01**	12.7	12.7	12.7	12.7	12.7
36.43	**48.0**	**2.23**	11.4	11.4	11.4	11.4	11.4	**94.7**	**4.39**	12.8	12.8	12.8	12.7	12.7
38.19	**45.8**	**1.93**	10.4	10.4	10.4	10.4	10.4	**90.3**	**2.91**	11.3	11.3	11.3	11.2	11.2
43.43	**40.3**	**1.70**	9.5	9.5	9.5	9.5	9.5	**79.4**	**2.69**	10.4	10.4	10.4	10.4	10.4
49.56	**35.3**	**1.49**	9.5	9.5	9.5	9.5	9.5	**69.6**	**2.47**	10.4	10.4	10.4	10.4	10.4
55.84	**31.3**	**1.32**	8.8	8.8	8.8	8.8	8.8	**61.8**	**2.29**	9.7	9.7	9.7	9.7	9.7
62.40	**28.0**	**1.18**	8.2	8.2	8.3	8.2	8.2	**55.3**	**2.13**	9.1	9.1	9.1	9.1	9.1
71.18	**24.6**	**1.04**	7.6	7.6	7.6	7.6	7.6	**48.5**	**1.79**	8.4	8.4	8.4	8.4	8.4
80.17	**21.8**	**0.80**	7.0	7.0	7.0	7.0	7.0	**43.0**	**1.34**	7.8	7.8	7.8	7.8	7.8

MSM thermal factors

Ambient temp (Deg. F)	Thermal factor
0	1.89
20	1.69
40	1.30
60	1.09
68	1.00
80	0.87
100	0.68
120	0.47

Rated power as shown on the table above is for the largest available motor frame for a unit size and ratio.

When using the factors in the table, compare result with the actual ratio and motor frame used.

Example: MSM 38, 18.47:1, 1750 RPM input speed, 140TC motor frame at 120 degree F ambient, A5 mounting position:

According to the table above, this unit is capable of 15.6 Hp thermally at 68 degree F. To convert this to the capability at 120 degrees F, multiply the rating by the factor in the Thermal Factors table (0.47). Actual thermal rating is 15.6*0.47 = 7.332 Hp. The mechanical rating for the MSM 38, 18.47, 140TC frame is 4.36 Hp. This unit is not thermally limited.

Thermal ratings – MSM 48

The Thermal Hp Ratings shown in the table below are based on an ambient temperature of 68°F, continuous operation, and fan cooled motors, as well as with the standard ISO VG220 factory filled lubricant. If using a different lubricant, please contact Application Engineering. Darker shaded values indicate that the unit is thermally limited.

Ratio	1750 RPM							3450 RPM						
	Output speed	Rated power	Mounting position					Output speed	Rated power	Mounting position				
			A1A	A2	A3	A4	A5, A6			A1A	A2	A3	A4	A5, A6
	RPM	Hp	Hp	Hp	Hp	Hp	Hp	RPM	Hp	Hp	Hp	Hp	Hp	Hp
7.95	**220.3**	**7.70**	30.4	30.2	30.4	30.2	30.6	**434.2**	**11.22**	29.4	27.0	28.8	28.0	30.1
9.55	**183.3**	**7.07**	28.5	28.3	28.5	28.3	28.6	**361.4**	**10.30**	28.8	27.1	28.2	27.8	29.2
11.24	**155.7**	**6.53**	26.9	26.9	27.0	26.9	27.1	**307.0**	**9.50**	27.9	27.0	27.8	27.4	28.3
12.59	**139.0**	**6.16**	26.3	26.2	26.3	26.2	26.3	**274.0**	**8.97**	27.7	27.1	27.7	27.4	28.1
14.11	**124.0**	**5.80**	25.2	25.1	25.2	25.1	25.2	**244.4**	**8.44**	26.9	26.4	26.8	26.6	27.1
15.41	**113.6**	**5.53**	24.1	24.1	24.1	24.1	24.1	**223.9**	**8.06**	25.9	25.5	25.8	25.7	26.1
16.63	**105.2**	**6.48**	22.3	22.2	22.2	22.1	22.1	**207.4**	**9.72**	21.1	20.6	20.8	20.5	20.5
19.34	**90.5**	**5.98**	21.2	21.1	21.1	21.1	21.1	**178.4**	**8.97**	20.4	20.1	20.3	20.1	20.0
21.46	**81.5**	**5.50**	20.0	20.0	20.0	19.9	19.9	**160.8**	**8.48**	19.6	19.3	19.4	19.3	19.2
23.37	**74.9**	**5.05**	20.0	20.0	20.0	20.0	20.0	**147.6**	**8.08**	19.9	19.7	19.8	19.6	19.5
26.14	**67.0**	**4.51**	18.9	18.9	18.9	18.9	18.9	**132.0**	**7.58**	18.9	18.7	18.8	18.7	18.7
28.58	**61.2**	**4.13**	18.0	18.0	18.0	18.0	18.0	**120.7**	**7.20**	18.2	18.0	18.1	18.0	17.9
31.36	**55.8**	**3.76**	17.3	17.3	17.3	17.3	17.3	**110.0**	**6.82**	17.5	17.4	17.5	17.4	17.4
34.58	**50.6**	**3.41**	16.6	16.6	16.6	16.6	16.6	**99.8**	**6.43**	16.9	16.9	16.9	16.8	16.8
38.33	**45.7**	**3.08**	15.7	15.7	15.7	15.7	15.7	**90.0**	**6.02**	16.1	16.1	16.1	16.1	16.0
43.43	**40.3**	**2.72**	15.2	15.2	15.2	15.2	15.2	**79.4**	**5.36**	15.7	15.7	15.7	15.7	15.6
47.92	**36.5**	**2.46**	14.1	14.1	14.1	14.1	14.1	**72.0**	**4.85**	14.7	14.6	14.6	14.6	14.6
54.17	**32.3**	**2.18**	13.0	13.0	13.0	13.0	13.0	**63.7**	**4.29**	13.6	13.5	13.5	13.5	13.5
61.86	**28.3**	**1.91**	12.8	12.8	12.8	12.8	12.8	**55.8**	**3.76**	13.5	13.5	13.5	13.5	13.4
70.33	**24.9**	**1.68**	11.7	11.7	11.7	11.7	11.7	**49.1**	**3.31**	12.4	12.4	12.4	12.4	12.4
75.27	**23.2**	**1.57**	11.4	11.4	11.4	11.4	11.4	**45.8**	**2.91**	12.1	12.1	12.1	12.1	12.1
86.77	**20.2**	**1.36**	10.3	10.3	10.3	10.3	10.3	**39.8**	**1.87**	11.0	11.0	11.0	11.0	11.0

MSM thermal factors

Ambient temp (Deg. F)	Thermal factor
0	1.89
20	1.69
40	1.30
60	1.09
68	1.00
80	0.87
100	0.68
120	0.47

Rated power as shown on the table above is for the largest available motor frame for a unit size and ratio.

When using the factors in the table, compare result with the actual ratio and motor frame used.

Example: MSM 48, 54.17:1, 3450 RPM input speed, 180TC motor frame at 80 degree F ambient, A4 mounting position:

According to the table above, this unit is capable of 13.5 Hp thermally at 68 degree F. To convert this to the capability at 80 degrees F, multiply the rating by the factor in the Thermal Factors table (0.87). Actual thermal rating is 13.5*0.87 = 11.745 Hp. The mechanical rating for the MSM 48, 54.17, 180TC frame is 4.29 Hp. This unit is not thermally limited.

Thermal ratings – MSM 58

The Thermal Hp Ratings shown in the table below are based on an ambient temperature of 68°F, continuous operation, and fan cooled motors, as well as with the standard ISO VG220 factory filled lubricant. If using a different lubricant, please contact Application Engineering. Darker shaded values indicate that the unit is thermally limited.

Ratio	1750 RPM							3450 RPM						
	Output speed	Rated power	Mounting position					Output speed	Rated power	Mounting position				
			A1A	A2	A3	A4	A5, A6			A1A	A2	A3	A4	A5, A6
	RPM	Hp	Hp	Hp	Hp	Hp	Hp	RPM	Hp	Hp	Hp	Hp	Hp	Hp
7.95	**220.3**	**7.70**	30.4	30.2	30.4	30.2	30.6	**434.2**	**11.22**	29.4	27.0	28.8	28.0	30.1
9.55	**183.3**	**7.07**	28.5	28.3	28.5	28.3	28.6	**361.4**	**10.30**	28.8	27.1	28.2	27.8	29.2
11.24	**155.7**	**6.53**	26.9	26.9	27.0	26.9	27.1	**307.0**	**9.50**	27.9	27.0	27.8	27.4	28.3
12.59	**139.0**	**6.16**	26.3	26.2	26.3	26.2	26.3	**274.0**	**8.97**	27.7	27.1	27.7	27.4	28.1
14.11	**124.0**	**5.80**	25.2	25.1	25.2	25.1	25.2	**244.4**	**8.44**	26.9	26.4	26.8	26.6	27.1
15.41	**113.6**	**5.53**	24.1	24.1	24.1	24.1	24.1	**223.9**	**8.06**	25.9	25.5	25.8	25.7	26.1
16.63	**105.2**	**6.48**	22.3	22.2	22.2	22.1	22.1	**207.4**	**9.72**	21.1	20.6	20.8	20.5	20.5
19.34	**90.5**	**5.98**	21.2	21.1	21.1	21.1	21.1	**178.4**	**8.97**	20.4	20.1	20.3	20.1	20.0
21.46	**81.5**	**5.50**	20.0	20.0	20.0	19.9	19.9	**160.8**	**8.48**	19.6	19.3	19.4	19.3	19.2
23.37	**74.9**	**5.05**	20.0	20.0	20.0	20.0	20.0	**147.6**	**8.08**	19.9	19.7	19.8	19.6	19.5
26.14	**67.0**	**4.51**	18.9	18.9	18.9	18.9	18.9	**132.0**	**7.58**	18.9	18.7	18.8	18.7	18.7
28.58	**61.2**	**4.13**	18.0	18.0	18.0	18.0	18.0	**120.7**	**7.20**	18.2	18.0	18.1	18.0	17.9
31.36	**55.8**	**3.76**	17.3	17.3	17.3	17.3	17.3	**110.0**	**6.82**	17.5	17.4	17.5	17.4	17.4
34.58	**50.6**	**3.41**	16.6	16.6	16.6	16.6	16.6	**99.8**	**6.43**	16.9	16.9	16.9	16.8	16.8
38.33	**45.7**	**3.08**	15.7	15.7	15.7	15.7	15.7	**90.0**	**6.02**	16.1	16.1	16.1	16.1	16.0
43.43	**40.3**	**2.72**	15.2	15.2	15.2	15.2	15.2	**79.4**	**5.36**	15.7	15.7	15.7	15.7	15.6
47.92	**36.5**	**2.46**	14.1	14.1	14.1	14.1	14.1	**72.0**	**4.85**	14.7	14.6	14.6	14.6	14.6
54.17	**32.3**	**2.18**	13.0	13.0	13.0	13.0	13.0	**63.7**	**4.29**	13.6	13.5	13.5	13.5	13.5
61.86	**28.3**	**1.91**	12.8	12.8	12.8	12.8	12.8	**55.8**	**3.76**	13.5	13.5	13.5	13.5	13.4
70.33	**24.9**	**1.68**	11.7	11.7	11.7	11.7	11.7	**49.1**	**3.31**	12.4	12.4	12.4	12.4	12.4
75.27	**23.2**	**1.57**	11.4	11.4	11.4	11.4	11.4	**45.8**	**2.91**	12.1	12.1	12.1	12.1	12.1
86.77	**20.2**	**1.36**	10.3	10.3	10.3	10.3	10.3	**39.8**	**1.87**	11.0	11.0	11.0	11.0	11.0

MSM thermal factors

Ambient temp (Deg. F)	Thermal factor
0	1.89
20	1.69
40	1.30
60	1.09
68	1.00
80	0.87
100	0.68
120	0.47

Rated power as shown on the table above is for the largest available motor frame for a unit size and ratio.

When using the factors in the table, compare result with the actual ratio and motor frame used.

Example: MSM 48, 54.17:1, 3450 RPM input speed, 180TC motor frame at 80 degree F ambient, A4 mounting position:

According to the table above, this unit is capable of 13.5 Hp thermally at 68 degree F. To convert this to the capability at 80 degrees F, multiply the rating by the factor in the Thermal Factors table (0.87). Actual thermal rating is 13.5*0.87 = 11.745 Hp. The mechanical rating for the MSM 48, 54.17, 180TC frame is 4.29 Hp. This unit is not thermally limited.

Thermal ratings – MSM 68

The Thermal Hp ratings shown in the table below are based on an ambient temperature of 68°F, continuous operation, and fan cooled motors, as well as with the standard ISO VG220 factory filled lubricant. If using a different lubricant, please contact Application Engineering. Darker shaded values indicate that the unit is thermally limited.

Ratio	1750 RPM							3450 RPM						
	Output speed	Rated power	Mounting position					Output speed	Rated power	Mounting position				
			A1	A2	A3	A4	A5, A6			A1	A2	A3	A4	A5, A6
	RPM	Hp	Hp	Hp	Hp	Hp	Hp	RPM	Hp	Hp	Hp	Hp	Hp	Hp
6.65	**263.1**	**26.92**	47.6	46.4	46.6	46.7	48.9	**518.7**	**49.21**	25.3	16.9	19.4	19.7	30.8
8.02	**218.1**	**25.38**	47.2	46.3	46.4	46.6	47.9	**430.0**	**45.03**	32.4	25.9	27.7	28.7	35.9
9.63	**181.7**	**23.74**	48.8	48.4	48.4	48.5	49.5	**358.3**	**41.10**	39.2	35.8	36.3	37.2	42.0
11.29	**155.0**	**21.52**	46.6	46.4	46.3	46.4	47.1	**305.7**	**37.77**	40.3	37.8	38.2	38.9	42.2
13.45	**130.1**	**18.27**	43.6	43.4	43.4	43.5	43.9	**256.5**	**34.29**	39.7	38.2	38.4	39.1	41.2
14.59	**120.0**	**16.85**	42.9	42.8	42.7	42.8	43.2	**236.5**	**32.35**	40.1	38.9	39.0	39.5	41.2
16.28	**107.5**	**15.09**	41.2	41.1	41.1	41.2	41.5	**211.9**	**29.42**	39.4	38.6	38.6	39.0	40.3
17.64	**99.2**	**13.93**	39.7	39.7	39.6	39.7	39.9	**195.6**	**27.47**	38.5	37.8	37.8	38.2	39.2
19.99	**87.5**	**12.29**	37.6	37.5	37.5	37.5	37.7	**172.6**	**24.24**	37.1	36.6	36.6	36.9	37.6
21.54	**81.3**	**11.41**	35.7	35.6	35.6	35.6	35.7	**160.2**	**22.50**	35.6	35.1	35.1	35.4	35.9
23.29	**75.2**	**10.55**	34.0	34.0	34.0	34.0	34.1	**148.2**	**20.81**	34.2	33.9	33.9	34.1	34.5
26.75	**65.4**	**7.81**	31.1	31.1	31.1	31.1	31.1	**129.0**	**11.92**	30.4	30.0	30.3	30.1	30.0
29.37	**59.6**	**7.11**	30.2	30.1	30.2	30.2	30.1	**117.5**	**11.15**	29.8	29.4	29.7	29.5	29.4
32.34	**54.1**	**6.46**	28.6	28.5	28.6	28.5	28.5	**106.7**	**10.40**	28.3	28.1	28.2	28.2	28.1
35.10	**49.9**	**5.95**	27.4	27.4	27.4	27.4	27.4	**98.3**	**9.80**	27.4	27.2	27.4	27.3	27.3
38.25	**45.7**	**5.46**	26.2	26.2	26.2	26.2	26.2	**90.2**	**9.21**	26.3	26.1	26.3	26.2	26.2
41.89	**41.8**	**4.99**	24.9	24.9	24.9	24.9	24.9	**82.4**	**8.63**	25.2	25.0	25.1	25.1	25.1
46.14	**37.9**	**4.53**	23.6	23.6	23.6	23.6	23.6	**74.8**	**8.05**	24.0	25.5	23.9	23.9	23.8
53.07	**33.0**	**3.94**	22.1	22.4	22.1	22.1	22.4	**65.0**	**7.29**	22.7	22.6	22.6	22.7	22.6
57.49	**30.4**	**3.63**	20.8	20.8	20.8	20.8	20.8	**60.0**	**6.89**	21.4	21.3	21.4	21.4	21.4
63.54	**27.5**	**3.29**	19.6	19.6	19.6	19.6	19.6	**54.3**	**6.41**	20.3	20.1	20.2	20.3	20.2
74.13	**23.6**	**2.82**	18.4	18.4	18.4	18.4	18.4	**46.5**	**5.56**	19.1	19.1	19.1	19.1	19.1
82.52	**21.2**	**2.53**	17.1	17.1	17.1	17.1	17.1	**41.8**	**4.39**	17.9	17.8	17.9	17.9	17.9

MSM thermal factors

Ambient temp (Deg. F)	Thermal factor
0	1.89
20	1.69
40	1.30
60	1.09
68	1.00
80	0.87
100	0.68
120	0.47

Rated power as shown on the table above is for the largest available motor frame for a unit size and ratio.

When using the factors in the table, compare result with the actual ratio and motor frame used.

Example: MSM 68, 6.65:1, 3450 RPM input speed, 210TC motor frame at 40 degree F ambient, A2 mounting position:

According to the table above, this unit is capable of 16.9 Hp thermally at 68 degree F. To convert this to the capability at 40 degrees F, multiply the rating by the factor in the Thermal Factors table (1.30). Actual thermal rating is 16.9*1.3 = 21.97 Hp. The mechanical rating for the MSM 68, 6.65, 210TC frame is 49.21 Hp. This unit is now thermally limited to 21.97 Hp.

Thermal ratings – MSM 88

The Thermal Hp ratings shown in the table below are based on an ambient temperature of 68°F, continuous operation, and fan cooled motors, as well as with the standard ISO VG220 factory filled lubricant. If using a different lubricant, please contact Application Engineering. Darker shaded values indicate that the unit is thermally limited.

Ratio	1750 RPM							3450 RPM						
	Output speed	Rated power	Mounting position					Output speed	Rated power	Mounting position				
			A1	A2	A3	A4	A5, A6			A1	A2	A3	A4	A5, A6
	RPM	Hp	Hp	Hp	Hp	Hp	Hp	RPM	Hp	Hp	Hp	Hp	Hp	Hp
8.85	**197.8**	**45.47**	90.2	85.7	89.1	87.5	91.7	**390.0**	**79.73**	52.3	20.4	40.9	36.1	57.3
10.79	**162.2**	**43.28**	88.2	86.1	88.4	87.1	89.7	**319.8**	**71.77**	64.6	49.2	64.1	58.0	72.1
12.64	**138.4**	**36.94**	84.4	82.9	84.5	83.6	85.4	**272.9**	**65.75**	69.1	58.3	68.5	64.9	74.4
14.86	**117.8**	**31.42**	84.9	84.1	85.1	84.5	85.7	**232.2**	**59.94**	76.1	70.1	76.8	73.8	80.2
17.05	**102.6**	**27.39**	80.1	79.5	80.2	79.7	80.6	**202.3**	**53.99**	75.0	70.7	75.4	73.6	77.9
20.12	**87.0**	**23.20**	73.8	73.5	73.9	73.6	74.2	**171.4**	**45.74**	72.1	69.2	72.3	71.1	73.9
21.81	**80.2**	**21.41**	72.2	72.0	72.3	72.0	72.5	**158.2**	**42.20**	71.6	69.6	71.8	71.1	73.2
24.25	**72.2**	**19.25**	68.4	68.2	68.5	68.3	68.7	**142.3**	**37.96**	69.1	67.5	69.2	68.6	70.3
26.34	**66.4**	**17.73**	64.8	64.7	64.8	64.7	65.0	**131.0**	**34.94**	66.2	64.9	66.2	65.8	67.0
29.14	**60.1**	**16.03**	61.9	61.9	62.1	61.9	62.1	**118.4**	**31.59**	64.1	63.1	64.2	63.9	64.7
30.67	**57.1**	**13.62**	56.4	56.2	56.5	56.2	56.2	**112.5**	**24.19**	63.3	54.7	55.5	55.5	55.2
34.23	**51.1**	**12.20**	54.1	54.0	54.2	54.0	54.0	**100.8**	**22.24**	54.3	53.3	54.0	54.0	53.8
37.08	**47.2**	**11.27**	52.1	51.9	52.1	51.9	51.9	**93.0**	**20.99**	52.7	51.8	52.5	52.5	52.2
42.03	**41.6**	**9.94**	49.2	49.1	49.2	49.2	49.1	**82.1**	**19.17**	50.2	49.6	50.0	50.0	49.8
45.27	**38.7**	**9.23**	46.8	46.8	46.8	46.8	46.8	**76.2**	**18.18**	48.1	47.6	47.9	47.9	47.8
48.95	**35.7**	**8.53**	44.8	44.7	44.8	44.8	44.7	**70.5**	**16.83**	46.3	45.8	46.1	46.1	45.9
53.16	**32.9**	**7.86**	42.7	42.7	42.7	42.7	42.7	**64.9**	**15.49**	44.4	43.9	44.1	44.3	44.1
58.78	**29.8**	**7.11**	40.1	40.1	40.1	40.1	40.1	**58.7**	**14.01**	41.9	41.5	41.8	41.8	41.8
63.67	**27.5**	**6.56**	38.3	38.3	38.3	38.3	38.3	**54.2**	**12.94**	40.2	40.0	40.1	40.2	40.1
71.75	**24.4**	**5.82**	36.2	36.2	36.2	36.2	36.2	**48.1**	**11.48**	38.3	38.1	38.1	38.2	38.1
78.56	**22.3**	**5.32**	33.7	33.6	33.6	33.6	33.6	**43.9**	**9.98**	35.7	35.5	35.6	35.7	35.7
87.50	**20.0**	**4.77**	31.1	31.1	31.1	31.1	31.1	**39.4**	**6.98**	33.2	34.9	33.0	33.2	33.1
100.06	**17.5**	**3.22**	29.6	29.6	29.6	29.6	29.6	**34.5**	**4.42**	31.8	31.6	31.7	31.8	33.3
110.96	**15.8**	**2.94**	27.5	27.4	27.5	27.5	27.5	**31.1**	**3.03**	29.6	29.5	29.5	29.6	29.5
123.05	**14.2**	**2.68**	25.5	25.4	25.4	25.5	25.5	**28.0**	**2.17**	27.6	27.4	27.4	27.6	27.4

MSM thermal factors

Ambient temp (Deg. F)	Thermal factor
0	1.89
20	1.69
40	1.30
60	1.09
68	1.00
80	0.87
100	0.68
120	0.47

Rated power as shown on the table above is for the largest available motor frame for a unit size and ratio.

When using the factors in the table, compare result with the actual ratio and motor frame used.

Example: MSM 88, 29.14:1, 1750 RPM input speed, 210TC motor frame at 100 degree F ambient, A3 mounting position:

According to the table above, this unit is capable of 62.1 Hp thermally at 68 degree F. To convert this to the capability at 100 degrees F, multiply the rating by the factor in the Thermal Factors table (0.68). Actual thermal rating is 62.1*0.68 = 42.228 Hp.

The mechanical rating for the MSM 88, 29.14, 210TC frame is 16.03 Hp. This unit is not thermally limited.

Thermal ratings – MSM 108

The Thermal Hp ratings shown in the table below are based on an ambient temperature of 68°F, continuous operation, and fan cooled motors, as well as with the standard ISO VG220 factory filled lubricant. If using a different lubricant, please contact Application Engineering. Darker shaded values indicate that the unit is thermally limited.

Ratio	1750 RPM							3450 RPM						
	Output speed	Rated power	Mounting position					Output speed	Rated power	Mounting position				
			A1	A2	A3	A4	A5, A6			A1	A2	A3	A4	A5, A6
	RPM	Hp	Hp	Hp	Hp	Hp	Hp	RPM	Hp	Hp	Hp	Hp	Hp	Hp
9.52	**183.8**	**74.16**	111.9	100.8	107.9	105.8	114.1	**362.4**	**114.72**	32.1	0.0	7.4	0.0	38.6
11.08	**158.0**	**66.01**	112.1	104.8	110.3	108.5	114.5	**311.5**	**105.97**	52.3	6.7	36.0	30.6	62.7
12.28	**142.6**	**60.87**	112.3	107.1	111.2	109.7	114.3	**281.1**	**100.24**	65.6	27.0	54.8	49.6	75.5
14.59	**120.0**	**52.98**	108.4	105.8	108.6	107.3	110.4	**236.5**	**91.02**	77.5	57.2	77.6	71.0	88.7
16.83	**104.0**	**47.09**	103.2	101.3	103.4	102.4	104.6	**204.9**	**83.79**	82.5	67.7	82.1	78.1	90.1
19.78	**88.5**	**41.13**	101.8	100.9	102.2	101.5	103.1	**174.4**	**76.05**	90.2	81.4	90.2	87.7	95.0
21.18	**82.6**	**29.24**	84.1	82.7	83.8	83.5	83.3	**162.9**	**43.88**	72.6	62.9	70.0	69.6	67.3
24.89	**70.3**	**26.63**	83.1	82.3	83.0	82.8	82.6	**138.6**	**39.96**	75.5	70.1	74.6	74.2	72.6
28.56	**61.3**	**24.54**	78.2	77.7	78.1	78.1	77.8	**120.8**	**36.83**	73.2	69.1	72.4	72.1	71.0
33.71	**51.9**	**22.19**	72.1	71.9	72.1	72.1	72.0	**102.4**	**33.30**	69.5	66.7	68.8	68.8	67.9
36.54	**47.9**	**21.11**	70.5	70.1	70.4	70.4	70.2	**94.4**	**31.69**	68.8	66.5	68.0	68.2	67.5
40.62	**43.1**	**19.76**	66.8	66.7	66.8	66.8	66.7	**84.9**	**29.66**	65.9	64.4	65.6	65.7	65.2
44.12	**39.7**	**18.76**	63.7	63.4	63.7	63.5	63.5	**78.2**	**28.15**	63.3	61.9	62.9	63.1	62.6
48.81	**35.9**	**17.12**	60.9	60.8	62.1	62.1	60.8	**70.7**	**26.21**	61.2	59.9	61.0	61.2	60.6
52.40	**33.4**	**15.95**	58.0	57.8	58.0	58.0	57.9	**65.8**	**24.92**	58.6	57.5	58.1	58.6	58.0
56.47	**31.0**	**14.80**	55.4	55.3	55.3	55.4	55.3	**61.1**	**23.63**	56.4	55.3	55.8	56.1	55.8
61.12	**28.6**	**13.67**	52.7	52.7	52.7	52.7	52.7	**56.4**	**22.34**	54.0	53.1	53.5	53.7	53.5
66.48	**26.3**	**12.57**	50.8	50.0	50.0	50.8	50.0	**51.9**	**21.05**	51.5	50.6	51.1	51.5	51.1
72.74	**24.1**	**11.49**	47.2	47.1	47.2	47.2	47.1	**47.4**	**18.94**	48.7	48.1	48.3	48.7	48.5

MSM thermal factors

Ambient temp (Deg. F)	Thermal factor
0	1.89
20	1.69
40	1.30
60	1.09
68	1.00
80	0.87
100	0.68
120	0.47

Rated power as shown on the table above is for the largest available motor frame for a unit size and ratio.

When using the factors in the table, compare result with the actual ratio and motor frame used.

Example: MSM 108, 9.52:1, 1750 RPM input speed, 280TC motor frame at 120 degree F ambient, A4 mounting position:

According to the table above, this unit is capable of 105.8 Hp thermally at 68 degree F. To convert this to the capability at 120 degrees F, multiply the rating by the factor in the Thermal Factors table (0.47). Actual thermal rating is 105.8*0.47 = 49.726 Hp. The mechanical rating for the MSM 108, 9.52, 280TC frame is 74.16 Hp. This unit is now thermally limited to 49.726 Hp.

Thermal ratings – MSM 128

The Thermal Hp ratings shown in the table below are based on an ambient temperature of 68°F, continuous operation, and fan cooled motors, as well as with the standard ISO VG220 factory filled lubricant. If using a different lubricant, please contact Application Engineering. Darker shaded values indicate that the unit is thermally limited

Ratio	1750 RPM							3450 RPM						
	Output speed	Rated power	Mounting position					Output speed	Rated power	Mounting position				
			A1	A2	A3	A4	A5, A6			A1	A2	A3	A4	A5, A6
	RPM	Hp	Hp	Hp	Hp	Hp	Hp	RPM	Hp	Hp	Hp	Hp	Hp	Hp
6.86	**255.2**	**133.21**	140.7	115.5	138.4	119.4	152.3	**503.2**	**199.92**	0.0	0.0	0.0	0.0	0.0
9.12	**191.8**	**115.99**	164.1	142.6	161.3	151.9	170.8	**378.2**	**174.06**	0.0	0.0	0.0	0.0	15.8
10.56	**165.7**	**107.48**	175.3	163.5	177.0	169.1	182.3	**326.6**	**161.31**	41.4	0.0	47.9	10.4	81.3
12.47	**140.3**	**98.14**	170.0	162.1	171.3	166.5	175.1	**276.6**	**147.43**	83.6	27.0	88.9	60.5	114.2
13.92	**125.7**	**89.76**	167.4	161.8	168.5	165.0	171.2	**247.8**	**138.63**	106.7	62.3	110.7	90.2	130.3
16.27	**107.6**	**78.94**	160.7	157.7	162.1	159.6	163.8	**212.0**	**126.76**	123.8	99.5	133.0	117.3	143.6
18.65	**93.8**	**70.38**	152.2	150.2	153.2	151.7	154.4	**184.9**	**116.96**	130.6	112.7	135.9	126.3	143.9
21.57	**81.1**	**62.20**	141.8	140.4	142.5	141.5	143.3	**160.0**	**107.16**	131.1	119.1	134.3	128.8	140.0
22.39	**78.2**	**60.26**	146.6	145.4	147.2	146.2	147.8	**154.1**	**104.76**	139.4	129.7	142.4	137.4	147.1
23.96	**73.0**	**51.99**	123.7	121.3	123.5	122.9	121.8	**144.0**	**78.02**	109.8	91.9	106.0	105.4	94.5
24.77	**70.7**	**55.23**	138.7	137.8	139.3	138.6	139.6	**139.3**	**98.42**	136.4	128.9	138.2	134.9	141.9
27.66	**63.3**	**46.84**	121.2	119.5	121.1	120.6	119.6	**124.7**	**70.30**	111.7	98.3	109.1	108.6	100.1
32.50	**53.9**	**41.68**	118.0	117.1	117.9	117.6	116.8	**106.2**	**62.56**	114.3	106.6	113.1	112.7	107.4
36.83	**47.5**	**38.04**	110.8	110.3	110.9	110.7	110.1	**93.7**	**57.17**	110.1	104.4	109.1	109.1	105.1
43.21	**40.5**	**32.42**	101.9	101.6	102.1	101.9	101.7	**79.8**	**50.97**	103.9	99.9	103.0	103.3	100.4
47.14	**37.1**	**29.72**	98.5	98.1	98.5	98.5	98.1	**73.2**	**47.89**	101.7	98.5	100.7	101.2	99.1
51.43	**34.0**	**27.24**	94.3	93.9	94.3	94.1	94.0	**67.1**	**45.01**	98.2	95.5	97.2	97.7	95.8
55.50	**31.5**	**25.24**	90.1	89.8	90.0	90.1	89.8	**62.2**	**42.63**	94.4	92.2	93.5	94.2	92.4
62.03	**28.2**	**22.59**	84.8	84.6	84.7	84.7	84.6	**55.6**	**39.39**	89.8	88.0	89.0	89.6	88.4
66.44	**26.3**	**21.08**	80.8	80.7	80.8	80.8	80.7	**51.9**	**37.50**	85.9	84.5	85.2	85.9	84.8
71.45	**24.5**	**19.61**	77.0	76.7	76.9	76.9	76.7	**48.3**	**33.43**	82.4	81.0	81.4	82.1	81.4
77.17	**22.7**	**18.15**	73.2	74.4	73.1	73.2	74.4	**44.7**	**31.23**	78.6	77.6	78.0	78.6	77.9

MSM thermal factors

Ambient temp (Deg. F)	Thermal factor
0	1.89
20	1.69
40	1.30
60	1.09
68	1.00
80	0.87
100	0.68
120	0.47

Rated power as shown on the table above is for the largest available motor frame for a unit size and ratio.

When using the factors in the table, compare result with the actual ratio and motor frame used.

Example: MSM 128, 10.56:1, 3450 RPM input speed, 250TC motor frame at 20 degree F ambient, A1 mounting position:

According to the table above, this unit is capable of 41.4 Hp thermally at 68 degree F. To convert this to the capability at 20 degrees F, multiply the rating by the factor in the Thermal Factors table (1.69). Actual thermal rating is 41.4*1.69 = 69.966 Hp. The mechanical rating for the MSM 128, 10.56:1, 250TC frame is 89.63 Hp. This unit is now thermally limited to 69.966 Hp.

Thermal ratings – MSM 148

The Thermal Hp ratings shown in the table below are based on an ambient temperature of 68°F, continuous operation, and fan cooled motors, as well as with the standard ISO VG220 factory filled lubricant. If using a different lubricant, please contact Application Engineering. Darker shaded values indicate that the unit is thermally limited.

Ratio	1750 RPM							3450 RPM						
	Output speed	Rated power	Mounting position					Output speed	Rated power	Mounting position				
			A1	A2	A3	A4	A56, A6			A1	A2	A3	A4	A5, A6
	RPM	Hp	Hp	Hp	Hp	Hp	Hp	RPM	Hp	Hp	Hp	Hp	Hp	Hp
7.54	**232.0**	**158.78**	189.6	159.9	200.8	164.4	216.3	**457.3**	**269.08**	0.0	0.0	0.0	0.0	0.0
9.86	**177.5**	**135.62**	218.8	194.3	223.1	205.0	233.6	**350.0**	**233.86**	0.0	0.0	0.0	0.0	42.4
11.61	**150.7**	**118.96**	228.1	214.3	233.2	221.0	239.1	**297.2**	**212.55**	61.0	0.0	91.0	22.5	131.1
13.32	**131.4**	**106.60**	223.0	213.7	227.4	218.5	231.1	**259.1**	**195.15**	111.2	41.3	136.5	83.7	167.8
14.68	**119.2**	**100.04**	220.2	213.4	223.5	217.8	227.8	**235.1**	**183.16**	141.9	88.0	163.5	123.0	186.4
17.35	**100.8**	**91.16**	207.6	204.7	210.2	206.4	213.0	**198.8**	**163.28**	169.7	137.8	185.7	160.5	198.8
19.78	**88.5**	**81.47**	196.1	192.9	197.3	194.5	198.8	**174.4**	**148.67**	176.4	154.3	186.9	171.3	196.9
22.74	**76.9**	**72.24**	181.9	180.9	182.7	181.1	183.6	**151.7**	**133.10**	176.4	161.6	182.5	173.3	189.4
26.00	**67.3**	**64.28**	176.1	175.4	177.0	176.0	177.4	**132.7**	**118.50**	181.5	172.4	185.3	180.0	189.9
26.51	**66.0**	**74.17**	166.4	163.2	166.4	165.4	163.0	**130.1**	**113.66**	153.1	149.1	150.9	147.9	130.7
30.39	**57.6**	**64.69**	157.1	155.2	157.0	156.8	154.9	**113.5**	**111.96**	152.9	135.3	150.9	149.0	136.6
35.14	**49.8**	**55.95**	147.0	145.3	147.0	146.4	145.3	**98.2**	**92.52**	148.4	136.6	147.3	146.1	137.1
36.47	**48.0**	**53.91**	150.3	149.1	150.2	150.1	149.1	**94.6**	**100.03**	154.1	144.9	153.6	152.5	145.4
40.36	**43.4**	**48.72**	142.8	141.8	142.7	142.6	141.7	**85.5**	**87.52**	149.3	142.0	148.4	147.9	142.4
47.23	**37.1**	**41.63**	131.0	130.3	131.0	130.6	130.3	**73.0**	**82.06**	140.1	135.5	139.2	139.2	135.5
51.15	**34.2**	**38.44**	126.4	126.1	126.4	126.4	125.9	**67.4**	**75.16**	136.9	133.0	136.1	136.1	133.4
57.09	**30.7**	**34.44**	118.7	118.3	118.7	118.7	118.3	**60.4**	**67.89**	129.8	127.0	129.1	129.4	127.0
60.53	**28.9**	**32.48**	114.6	114.3	114.5	114.5	114.3	**57.0**	**64.04**	126.1	123.5	125.1	125.8	123.8
68.61	**25.5**	**28.42**	106.2	107.8	106.1	106.1	107.8	**50.3**	**56.49**	118.1	116.2	117.2	117.5	116.7
73.42	**23.8**	**26.78**	101.0	100.9	101.0	101.0	100.9	**47.0**	**52.80**	113.1	111.2	112.0	112.6	111.5
77.21	**22.7**	**19.21**	98.0	97.9	98.0	98.0	97.9	**44.7**	**32.63**	109.7	108.1	109.2	109.7	108.6
83.32	**21.0**	**17.98**	93.1	92.9	93.0	93.0	93.0	**41.4**	**30.48**	104.8	103.4	104.1	104.5	103.6

MSM thermal factors

Ambient temp (Deg. F)	Thermal factor
0	1.89
20	1.69
40	1.30
60	1.09
68	1.00
80	0.87
100	0.68
120	0.47

Rated power as shown on the table above is for the largest available motor frame for a unit size and ratio.

When using the factors in the table, compare result with the actual ratio and motor frame used.

Example: MSM 148, 14.68:1, 3450 RPM input speed, 280TC motor frame at 60 degree F ambient, A3 mounting position:

According to the table above, this unit is capable of 163.5 Hp thermally at 68 degree F. To convert this to the capability at 60 degrees F, multiply the rating by the factor in the Thermal Factors table (1.09). Actual Thermal Rating is 163.5*1.09 = 178.215 Hp. The mechanical rating for the MSM 148, 14.68:1, 280TC frame is 170.81 Hp. This unit is not thermally limited.

Thermal ratings – MSM 168

The Thermal Hp ratings shown in the table below are based on an ambient temperature of 68°F, continuous operation, and fan cooled motors, as well as with the standard ISO VG220 factory filled lubricant. If using a different lubricant, please contact Application Engineering. Darker shaded values indicate that the unit is thermally limited.

Ratio	1750 RPM							3450 RPM						
	Output speed	Rated power	Mounting position					Output speed	Rated power	Mounting position				
			A1	A2	A3	A4	A5, A6			A1	A2	A3	A4	A5, A6
	RPM	Hp	Hp	Hp	Hp	Hp	Hp	RPM	Hp	Hp	Hp	Hp	Hp	Hp
7.71	**226.8**	**158.78**	216.3	191.3	241.7	193.4	254.3	**447.2**	**297.84**	0.0	0.0	0.0	0.0	0.0
9.71	**180.2**	**145.07**	265.7	225.8	290.2	237.9	304.5	**355.3**	**265.63**	0.0	0.0	0.0	0.0	0.0
12.47	**140.4**	**126.00**	294.9	269.2	306.0	281.4	315.9	**276.7**	**230.69**	0.0	0.0	44.5	0.0	104.7
14.51	**120.6**	**114.15**	302.8	288.6	312.4	295.6	318.1	**237.8**	**210.05**	102.3	12.7	167.8	58.4	206.1
16.53	**105.8**	**105.33**	295.8	286.0	303.1	291.7	307.3	**208.7**	**192.83**	167.0	87.3	215.7	139.3	245.4
18.13	**96.5**	**98.91**	291.2	284.0	296.9	288.5	300.2	**190.3**	**181.08**	204.8	144.6	242.5	185.3	265.2
21.85	**80.1**	**86.58**	271.8	268.3	275.3	270.5	277.5	**157.9**	**158.50**	240.4	208.5	264.0	232.3	276.9
24.28	**72.1**	**80.06**	257.7	255.0	260.3	257.0	261.9	**142.1**	**146.53**	245.3	221.2	261.9	239.7	271.9
27.50	**63.6**	**72.73**	240.6	238.8	242.4	240.1	243.4	**125.4**	**133.14**	243.6	226.9	254.4	240.4	261.7
31.83	**55.0**	**64.77**	217.8	217.0	218.4	217.5	218.7	**108.4**	**118.55**	241.2	234.7	244.4	241.3	248.1
32.07	**54.6**	**89.21**	219.6	215.8	220.1	218.7	217.6	**107.6**	**187.35**	212.6	182.5	213.6	207.1	197.6
36.55	**47.9**	**81.21**	223.5	204.5	207.4	206.8	205.6	**94.4**	**164.37**	209.9	189.7	210.8	206.8	199.4
42.03	**41.6**	**72.51**	193.3	191.2	193.3	192.5	192.1	**82.1**	**142.95**	203.7	189.1	203.7	201.4	196.0
48.04	**36.4**	**63.43**	186.6	185.5	186.7	191.7	185.8	**71.8**	**125.05**	202.9	194.2	203.6	202.6	220.6
55.68	**31.4**	**54.74**	171.4	170.6	171.5	171.4	170.8	**62.0**	**107.91**	190.5	184.7	190.5	189.9	187.6
60.66	**28.8**	**50.24**	164.4	164.0	164.8	164.4	164.2	**56.9**	**99.04**	185.1	180.4	184.6	184.1	182.5
67.58	**25.9**	**45.10**	154.0	153.6	154.3	153.9	153.8	**51.1**	**88.91**	175.0	171.7	174.5	174.5	173.1
71.58	**24.4**	**42.57**	148.6	148.1	148.6	148.6	148.2	**48.2**	**83.93**	169.8	166.7	168.9	169.3	168.0
80.50	**21.7**	**28.78**	138.1	137.7	138.1	138.1	137.8	**42.9**	**47.38**	159.2	156.8	158.4	158.8	157.6
86.06	**20.3**	**27.18**	131.4	131.3	131.4	131.4	131.3	**40.1**	**44.58**	152.0	150.1	151.6	152.0	150.9

MSM thermal factors

Ambient temp (Deg. F)	Thermal factor
0	1.89
20	1.69
40	1.30
60	1.09
68	1.00
80	0.87
100	0.68
120	0.47

Rated power as shown on the table above is for the largest available motor frame for a unit size and ratio.

When using the factors in the table, compare result with the actual ratio and motor frame used.

Example: MSM 168, 7.71:1, 1750 RPM input speed, 360TC motor frame at 80 degree F ambient, A4 mounting position:

According to the table above, this unit is capable of 193.4 Hp thermally at 68 degree F. To convert this to the capability at 80 degrees F, multiply the rating by the factor in the Thermal Factors table (0.87). Actual thermal rating is 193.4*0.87 = 168.258 Hp. The mechanical rating for the MSM 168, 7.71:1, 360TC frame is 158.78 Hp. This unit is not thermally limited.

Weights

Weights – MSM 38

				Output configuration			
				Universal mounting			
				B14		B5	
Unit size	Input configuration	Catalog number		Weight (lbs) (L)	Weight (Kg) (L)	Weight (lbs) (L)	Weight (Kg) (L)
		NEMA	IEC				
38	Clamp Collar	**MW382CN56C**	**MW382CI71D**	44	20	48	22
		–	MW382CI80D	49	22	53	24
		MW382CN140TC	MW382CI90D	49	22	53	24
		MW382CN180TC	MW382CI100D	53	24	57	26
		MW383CN56C	MW383CI71D	46	21	50	23
		–	MW383CI80D	52	24	56	25
		MW383CN140TC	MW383CI90D	52	24	56	25
	3 Pc Coupled	MW382LN56C	–	51	23	55	25
		–	MW382LI80D	66	30	70	32
		MW382LN140TC	MW382LI90D	66	30	70	32
		–	MW382LI100D	76	34	80	36
		MW383LN56C	–	52	24	56	25
		–	MW383LI80D	68	31	72	33
		MW383LN140TC	MW383LI90D	68	31	72	33
	Separate Group (Inch / Metric)	**MW382SI71**	**MW382SM71**	51	23	55	25
		MW382SI80	MW382SM80	59	27	63	29
		MW382SI90	MW382SM90	59	27	63	29
		MW382SI100	MW382SM100	66	30	70	32
		MW383SI71	MW383SM71	54	24	58	26
		MW383SI80	MW383SM80	61	28	65	29
		MW383SI90	MW383SM90	61	28	65	29
	Integral Gearmotor (Hp)	**MW382GH71C4**		53	24	57	26
		MW382GH71D4		53	24	57	26
		MW382GH71E4		57	26	61	28
		MW382GH80F4		57	26	61	28
		MW382GH80G4		60	27	64	29
		MW382GH90H4		65	29	69	31
		MW382GH90I4		70	32	74	34
		MW382GH100J4	–	77	35	81	37
		MW383GH71C4		55	25	59	27
		MW383GH71D4		55	25	59	27
		MW383GH71E4		59	27	63	29
		MW383GH80F4		59	27	63	29
		MW383GH80G4		63	29	67	30
		MW383GH90H4		67	30	71	32
		MW383GH90I4		72	33	76	34

* Weights are approximate

(L) – See footnotes page on the inside back cover

Weights – MSM 48

				Output configuration			
				Universal mounting			
				B14		B5	
Unit size	Input configuration	Catalog number		Weight (lbs) (L)	Weight (Kg) (L)	Weight (lbs) (L)	Weight (Kg) (L)
		NEMA	IEC				
48	Clamp Collar	**MW482CN56C**	**MW482CI71D**	68	31	74	34
			MW482CI80D	73	33	79	36
		MW482CN140TC	MW482CI90D	73	33	79	36
		MW482CN180TC	MW482CI100D	78	35	84	38
		–	MW482CI112D	80	36	86	39
		MW482CN210TC	–	82	37	88	40
		MW483CN56C	MW483CI71D	70	32	76	34
		–	MW483CI80D	75	34	81	37
		MW483CN140TC	MW483CI90D	75	34	81	37
		MW483CN180TC	MW483CI100D	80	36	86	39
	3 Pc Coupled	**MW482LN56C**	**–**	74	34	80	36
		–	MW482LI80D	90	41	96	44
		MW482LN140TC	MW482LI90D	90	41	96	44
		MW482LN180TC	MW482LI100D	101	46	107	49
		–	MW482LI112D	103	47	109	49
		MW483LN56C	–	75	34	81	37
		–	MW483LI80D	92	42	98	44
		MW483LN140TC	MW483LI90D	92	42	98	44
		MW483LN180TC	MW483LI100D	103	47	109	49
	Separate Group (Inch / Metric)	**MW482SI71**	**MW482SM71**	73	33	79	36
		MW482SI80	MW482SM80	80	36	86	39
		MW482SI90	MW482SM90	80	36	86	39
		MW482SI100	MW482SM100	89	40	95	43
		MW482SI112	MW482SM112	92	42	98	44
		MW483SI71	MW483SM71	75	34	81	37
		MW483SI80	MW483SM80	82	37	88	40
		MW483SI90	MW483SM90	82	37	88	40
		MW483SI100	MW483SM100	91	41	97	44
	Integral Gearmotor (Hp)	**MW482GH71C4**		77	35	83	38
		MW482GH71D4		77	35	83	38
		MW482GH71E4		81	37	87	39
		MW482GH80F4		81	37	87	39
		MW482GH80G4		84	38	90	41
		MW482GH90H4		89	40	95	43
		MW482GH90I4		94	43	100	45
		MW482GH100J4		101	46	107	49
		MW482GH112L4	–	123	56	129	59
		MW483GH71C4		79	36	85	39
		MW483GH71D4		79	36	85	39
		MW483GH71E4		83	38	89	40
		MW483GH80F4		83	38	89	40
		MW483GH80G4		86	39	92	42
		MW483GH90H4		91	41	97	44
		MW483GH90I4		96	44	102	46
		MW483GH100J4		103	47	109	49

* Weights are approximate

(L) – See footnotes page on the inside back cover

Weights – MSM 58

				Output configuration			
				Universal mounting			
				B14		B5	
Unit size	Input configuration	Catalog number		Weight (lbs) (L)	Weight (Kg) (L)	Weight (lbs) (L)	Weight (Kg) (L)
		NEMA	IEC				
58	Clamp Collar	**MW582CN56**	**MW582CI71D**	93	42	103	47
		–	**MW582CI80D**	97	44	107	49
		MW682CN140TC	MW582CI90D	97	44	107	49
		MW682CN180TC	MW582CI100D	100	45	110	50
		–	MW582CI112D	101	46	111	50
		MW582CN210TC	MW582CI1132D	112	51	122	55
		MW583CN56C	MW583CI71D	97	44	107	48
		–	MW583CI80D	101	46	111	50
		MW683CN140TC	MW583CI90D	101	46	111	50
		MW68CN180TC	MW583CI100D	104	47	114	52
	3 Pc Coupled	**MW582LN56C**	**MW582LI71D**	97	44	107	49
		–	MW582LI80D	118	53	128	58
		MW582LN140TC	MW582LI90D	118	53	128	58
		MW582LN180TC	MW582LI100D	129	58	139	63
		–	MW582LI112D	132	60	142	64
		MW582LN210TC	MW582LI132D	151	68	161	73
		MW583LN56	MW583LI71D	101	46	111	50
		–	MW583LI80D	122	55	132	60
		MW583LN140TC	MW583LI90D	122	55	132	60
		MW583LN180TC	MW583LI100D	133	60	143	65
	Separate Group (Inch / Metric)	**MW582SI71**	**MW582SM71**	106	48	116	53
		MW582SI80	MW582SM80	115	52	125	57
		MW582SI90	MW582SM90	115	52	125	57
		MW582SI100	MW582SM100	121	55	131	59
		MW582SI112	MW582SM112	129	58	139	63
		MW582SI132	MW582SM132	147	67	157	71
		MW583SI71	MW583SM71	110	50	120	54
		MW583SI80	MW583SM80	119	54	129	58
		MW583SI90	MW583SM90	119	54	129	58
		MW583SI100	MW583SM100	125	56	135	61
	Integral Gearmotor (Hp)	**MW582GH71C4**		105	48	115	52
		MW582GH71D4		105	48	115	52
		MW582GH71E4		105	48	115	52
		MW582GH80F4		109	49	119	54
		MW582GH80G4		109	49	119	54
		MW582GH90H4		117	53	127	58
		MW582GH90I4		117	53	127	58
		MW582GH100J4		129	58	139	63
		MW582GH112L4		151	68	161	73
		MW582GH132M4		248	112	258	117
		MW582GH132N4		248	112	258	117

* Weights are approximate

(L) – See footnotes page on the inside back cover

Weights – MSM 68

Unit size	Input configuration	Catalog number NEMA	Catalog number IEC	Output configuration – Universal mounting – B14 Weight (lbs) (L)	B14 Weight (Kg) (L)	B5 Weight (lbs) (L)	B5 Weight (Kg) (L)
68	Clamp Collar	**MW682CN56C**	**MW682CI71D**	105	48	115	52
		–	MW682CI80D	111	50	121	55
		MW682CN140TC	MW682CI90D	111	50	121	55
		MW682CN180TC	MW682CI100D	115	52	125	57
		–	MW682CI112D	118	54	128	58
		MW682CN210TC	MW682CI132D	134	61	144	65
		MW682CN250TC	–	136	62	146	66
		MW683CN56C	MW683CI71D	110	50	120	54
		–	MW683CI80D	116	53	126	57
		MW683CN140TC	MW683CI90D	116	53	126	57
		MW683CN180TC	MW683CI100D	120	54	130	59
		MW684CN56C	MW684CI71D	124	56	134	61
		–	MW684CI80D	128	58	138	63
		MW684CN140TC	MW684CI90D	128	58	138	63
		MW684CN180TC	MW684CI100D	134	61	144	65
		MW685CN56C	MW685CI71D	134	61	144	65
		–	MW685CI80D	138	63	148	67
		MW685CN140TC	MW685CI90D	138	163	148	67
		MW685CN180TC	MW685CI100D	142	64	152	69
	3 Pc Coupled	**MW682LN56C**	**–**	110	50	120	54
		–	MW682LI80D	127	58	137	62
		MW682LN140TC	MW682LI90D	127	58	137	62
		MW682LN180TC	MW682LI100D	138	63	148	67
		–	MW682LI112D	142	64	152	69
		MW682LN210TC	MW682LI132D	164	74	174	79
		MW683LN56C	–	112	51	122	55
		–	MW683LI80D	132	60	142	64
		MW683LN140TC	MW683LI90D	132	60	142	64
		MW683LN180TC	MW683LI100D	143	65	153	69
		MW684LN56C	MW684LI71D	133	60	143	65
		–	MW684LI80D	138	63	148	67
		MW684LN140TC	MW684LI90D	138	63	148	67
		MW684LN180TC	MW684LI100D	151	69	161	73
		MW685LN56C	MW685LI71D	142	64	152	69
		–	MW685LI80D	154	70	164	74
		MW685LN140TC	MW685LI90D	154	70	164	74
		MW685LN180TC	MW685LI100D	165	75	175	79

* Weights are approximate

(L) – See footnotes page on the inside back cover

Weights – MSM 68

				Output configuration			
				Universal mounting			
				B14		B5	
Unit size	Input configuration	Catalog number		Weight (lbs) (L)	Weight (Kg) (L)	Weight (lbs) (L)	Weight (Kg) (L)
		NEMA	IEC				
68	Separate Group (Inch / Metric)	MW682SI71	MW682SM71	110	50	120	54
		MW682SI80	MW682SM80	118	54	128	58
		MW682SI90	MW682SM90	118	54	128	58
		MW682SI100	MW682SM100	127	58	137	62
		MW682SI112	MW682SM112	130	59	140	63
		MW682SI132	MW682SM132	155	70	165	75
		MW683SI71	MW683SM71	115	52	125	57
		MW683SI80	MW683SM80	123	56	133	60
		MW683SI90	MW683SM90	123	56	133	60
		MW683SI100	MW683SM100	132	60	142	64
		MW684SI71	MW684SM71	127	58	137	62
		MW684SI80	MW684SM80	136	62	146	66
		MW684SI90	MW684SM90	136	62	146	66
		MW684SI100	MW684SM100	142	64	152	69
		MW685SI71	MW685SM71	137	63	149	68
		MW685SI80	MW685SM80	147	67	157	71
		MW685SI90	MW685SM90	147	67	157	71
		MW685SI100	MW685SM100	148	67	158	72
	Integral Gearmotor (Hp)	**MW682GH71C4**	–	114	52	124	56
		MW682GH71D4		114	52	124	56
		MW682GH71E4		118	54	128	58
		MW682GH80F4		118	54	128	58
		MW682GH80G4		122	55	132	60
		MW682GH90H4		126	57	136	62
		MW682GH90I4		132	60	142	64
		MW682GH100J4		139	63	149	68
		MW682GH112L4		161	73	171	78
		MW682GH132M4		230	104	240	109
		MW682GH132N4		261	118	271	123
		MW683GH71C4		120	54	130	59
		MW683GH71D4		120	54	130	59
		MW683GH71E4		124	56	134	61
		MW683GH80F4		124	56	134	61
		MW683GH80G4		127	58	137	62
		MW683GH90H4		131	59	141	64
		MW683GH90I4		137	62	147	67
		MW683GH100J4		144	65	154	70
		MW684GH71C4		128	58	138	63
		MW684GH71D4		128	58	138	63
		MW684GH71E4		131	59	141	64
		MW684GH80F4		135	61	145	66
		MW684GH80G4		139	63	149	68
		MW685GH71C4		142	64	152	69

* Weights are approximate

(L) – See footnotes page on the inside back cover

Weights – MSM 88

Unit size	Input configuration	Catalog number NEMA	Catalog number IEC	Output configuration – Universal mounting – B14 Weight (lbs) (L)	B14 Weight (Kg) (L)	B5 Weight (lbs) (L)	B5 Weight (Kg) (L)
88	Clamp Collar	**MW882CN140TC**	**MW882CI90D**	207	94	222	101
		MW882CN180TC	MW882CI100D	209	95	224	102
		–	MW882CI112D	213	97	228	103
		MW882CN210TC	MW882CI132D	226	102	241	109
		MW882CN250TC	MW882CI160D	248	112	263	119
		MW882CN280TC	–	252	114	267	121
		MW883CN56C	MW883CI71D	204	93	219	99
		–	MW883CI80D	210	95	225	102
		MW883CN140TC	MW883CI90D	210	95	225	102
		MW883CN180TC	MW883CI100D	214	97	229	104
		–	MW883CI112D	217	98	232	105
		MW883CN210TC	MW883CI132D	232	105	247	112
		MW884CN56C	MW884CI71D	221	100	236	107
		–	MW884CI80D	225	102	240	109
		MW884CN140TC	MW884CI90D	225	102	240	109
		MW884CN180TC	MW884CI100D	231	105	246	112
		–	MW884CI112D	231	105	247	112
		MW885CN56C	MW885CI71D	247	112	262	119
		–	MW885CI80D	251	114	266	121
		MW885CN140TC	MW885CI90D	251	114	266	121
		MW885CN180TC	MW885CI100D	255	116	270	123
		–	MW885CI112D	258	117	273	124
	3 Pc Coupled	**MW882LN140TC**	**MW882LI90D**	224	102	239	108
		MW882LN180TC	MW882LI100D	232	105	247	112
		–	MW882LI112D	237	107	252	114
		MW882LN210TC	MW882LI132D	255	116	270	122
		MW882LN250TC	MW882LI160D	302	137	317	144
		MW883LN56C	–	201	91	216	98
		–	MW883LI80D	226	102	241	109
		MW883LN140TC	MW883LI90D	226	102	241	109
		MW883LN180TC	MW883LI100D	237	107	252	114
		–	MW883LI112D	240	109	255	116
		MW883LN210TC	MW883LI132D	261	118	276	125
		MW884LN56C	MW884LI71D	230	104	245	111
		–	MW884LI80D	242	110	257	117
		MW884LN140TC	MW884LI90D	242	110	257	117
		MW884LN180TC	MW884LI100D	248	113	263	119
		–	MW884LI112D	256	116	271	123
		MW885LN56C	MW885LI71D	255	116	270	123
		–	MW885LI80D	267	121	282	128
		MW885LN140TC	MW885LI90D	267	121	282	128
		MW885LN180TC	MW885LI100D	278	126	293	133
		–	MW885LI112D	281	128	296	134

* Weights are approximate

(L) – See footnotes page on the inside back cover

Weights – MSM 88

Unit size	Input configuration	Catalog number NEMA	Catalog number IEC	Output configuration – Universal mounting – B14 Weight (lbs) (L)	B14 Weight (Kg) (L)	B5 Weight (lbs) (L)	B5 Weight (Kg) (L)
88	Separate Group (Inch / Metric)	**MW882SI90**	**MW882SM90**	214	97	229	104
		MW882SI100	MW882SM100	220	100	235	107
		MW882SI112	MW882SM112	225	102	240	109
		MW882SI132	MW882SM132	246	112	261	118
		MW882SI160	MW882SM160	269	122	284	129
		MW883SI71	MW883SM71	209	95	224	102
		MW883SI80	MW883SM80	216	98	231	105
		MW883SI90	MW883SM90	217	98	232	105
		MW883SI100	MW883SM100	225	102	240	109
		MW883SI112	MW883SM112	228	103	243	110
		MW883SI132	MW883SM132	252	114	267	121
		MW884SI71	MW884SM71	224	102	239	108
		MW884SI80	MW884SM80	233	106	248	113
		MW884SI90	MW884SM90	233	106	248	113
	Separate Group (Inch / Metric) (cont.)	**MW884SI100**	**MW884SM100**	239	108	254	115
		MW884SI112	MW884SM112	247	112	262	119
		MW885SI71	MW885SM71	254	115	269	122
		MW885SI80	MW885SM80	261	118	276	125
		MW885SI90	MW885SM90	262	119	277	126
		MW885SI100	MW885SM100	270	123	285	129
		MW885SI112	MW885SM112	275	125	290	132
	Integral Gearmotor (Hp)	**MW882GH90H4**	–	223	101	238	108
		MW882GH90I4		228	103	243	110
		MW882GH100J4		232	105	247	112
		MW882GH112L4		256	116	271	123
		MW882GH132M4		322	146	337	153
		MW882GH132N4		353	160	368	167
		MW882GH160P4		430	195	445	202
		MW882GH160Q4		487	221	502	228
		MW883GH71C4		213	97	228	103
		MW883GH71D4		213	97	228	103
		MW883GH71E4		217	98	232	105
		MW883GH80F4		217	98	232	105
		MW883GH80G4		221	100	236	107
		MW883GH90H4		225	102	240	109
		MW883GH90I4		231	105	246	112
		MW883GH100J4		237	107	252	114
		MW883GH112L4		260	118	275	125
		MW883GH132M4		328	149	343	156
		MW884GH71C4		225	102	240	109
		MW884GH71D4		225	102	240	109
		MW884GH71E4		228	103	243	110
		MW884GH80F4		232	105	247	112
		MW884GH80G4		236	107	251	114
		MW884GH90H4		241	109	256	116
		MW885GH71C4		255	116	270	123

* Weights are approximate

(L) – See footnotes page on the inside back cover

Weights – MSM 108

Unit size	Input configuration	Catalog number NEMA	Catalog number IEC	Output configuration – Universal mounting – B14 Weight (lbs) (L)	B14 Weight (Kg) (L)	B5 Weight (lbs) (L)	B5 Weight (Kg) (L)
108	Clamp Collar	**MW1082CN140TC**	**MW1082CI90D**	290	132	312	141
		MW1082CN180TC	MW1082CI100D	293	133	315	143
		–	MW1082CI112D	306	139	328	149
		MW1082CN210TC	MW1082CI132D	317	144	339	154
		MW1082CN250TC	MW1082CI160D	339	154	361	164
		MW1082CN280TC	MW1082CI180D	359	163	381	173
		MW1082CN320TC	–	311	141	388	176
		–	MW1082CI200D	361	164	383	174
		–	MW1083CI80D	307	139	329	149
		MW1083CN140TC	MW1083CI90D	306	139	328	149
		MW1083CN180TC	MW1083CI100D	311	141	333	151
		–	MW1083CI112D	314	142	336	152
		MW1083CN210TC	MW1083CI132D	329	149	351	159
		MW1083CN250TC	MW1083CI160D	355	161	377	171
		MW1084CN56C	MW1084CI71D	322	146	344	156
		–	MW1084CI80D	326	148	348	158
		MW1084CN140TC	MW1084CI90D	326	148	348	158
		MW1084CN180TC	MW1084CI100D	332	151	354	161
		–	MW1084CI112D	333	151	355	161
		MW1085CN56C	MW1085CI71D	348	158	370	168
		–	MW1085CI80D	352	160	374	170
		MW1085CN140TC	MW1085CI90D	352	160	374	170
		MW1085CN180TC	MW1085CI100D	356	161	378	171
		–	MW1085CI112D	359	163	381	173
	3 Pc Coupled	**MW1082LN140TC**	**MW1082LI90D**	307	139	329	149
		MW1082LN180TC	MW1082LI100D	315	143	337	153
		–	MW1082LI112D	329	149	351	159
		MW1082LN210TC	MW1082LI132D	346	157	368	167
		MW1082LN250TC	MW1082LI160D	392	178	414	188
		MW1082LN280TC	MW1082LI180D	442	200	464	210
		–	MW1082LI200D	455	206	477	216
		–	MW1083LI80D	323	146	345	156
		MW1083LN140TC	MW1083LI90D	323	146	345	156
		MW1083LN180TC	MW1083LI100D	334	151	356	161
		–	MW1083LI112D	338	153	360	163
		MW1083LN210TC	MW1083LI132D	358	162	380	172
		MW1083LN250TC	MW1083LI160D	409	185	431	195
		MW1084LN56C	MW1084LI71D	331	150	353	160
		–	MW1084LI80D	343	156	365	166
		MW1084LN140TC	MW1084LI90D	343	156	365	166
		MW1084LN180TC	MW1084LI100D	349	158	371	168
		–	MW1084LI112D	357	162	379	172
		MW1085LN56C	MW1085LI71D	356	161	378	171
		–	MW1085LI80D	368	167	390	177
		MW1085LN140TC	MW1085LI90D	368	167	390	177
		MW1085LN180TC	MW1085LI100D	379	172	401	182
		–	MW1085LI112D	382	173	404	183
	Separate Group (Inch / Metric)	**MW1082SI90**	**MW1082SM90**	308	140	330	150
		MW1082SI100	MW1082SM100	314	142	336	152
		MW1082SI112	MW1082SM112	317	144	339	154
		MW1082SI132	MW1082SM132	337	153	359	163
		MW1082SI160	MW1082SM160	359	163	381	173
		MW1082SI180	MW1082SM180	385	175	407	185
		MW1083SI80	MW1083SM80	313	142	335	152
		MW1083SI90	MW1083SM90	313	142	335	152

Weights – MSM 108

				Output configuration			
				Universal mounting			
				B14		B5	
Unit size	Input configuration	Catalog number		Weight (lbs) (L)	Weight (Kg) (L)	Weight (lbs) (L)	Weight (Kg) (L)
		NEMA	IEC				
108	Separate Group (Inch / Metric) (cont.)	**MW1083SI100**	**MW1083SM100**	322	146	344	156
		MW1083SI112	MW1083SM112	326	148	348	158
		MW1083SI132	MW1083SM132	349	158	371	168
		MW1083SI160	MW1083SM160	375	170	397	180
		MW1084SI71	MW1084SM71	325	147	347	157
		MW1084SI80	MW1084SM80	334	151	356	161
		MW1084SI90	MW1084SM90	334	151	356	161
		MW1084SI100	MW1084SM100	340	154	362	164
		MW1084SI112	MW1084SM112	348	158	370	168
		MW1085SI71	MW1085SM71	355	161	377	171
		MW1085SI80	MW1085SM80	362	164	384	174
		MW1085SI90	MW1085SM90	363	165	385	175
		MW1085SI100	MW1085SM100	371	168	393	178
		MW1085SI112	MW1085SM112	376	171	398	181
	Integral Gearmotor (Hp)	**MW1082GH90H4**	–	306	139	328	149
		MW1082GH190I4		312	141	334	151
		MW1082GH100J4		323	146	345	156
		MW1082GH112L4		349	158	371	168
		MW1082GH132M4		413	187	435	197
		MW1082GH132N4		443	201	465	211
		MW1082GH160P4		520	236	542	246
		MW1082GH160Q4		578	262	600	272
		MW1082GH180R4		634	288	656	298
		MW1082GH180S4		656	298	678	307
		MW1083GH80G4		318	144	340	154
		MW1083GH90H4		322	146	344	156
		MW1083GH90I4		328	149	350	159
		MW1083GH100J4		334	151	356	161
		MW1083GH112L4		357	162	379	172
		MW1083GH132M4		424	192	446	202
		MW1083GH132N4		455	206	477	216
		MW1083GH160P4		537	244	559	254
		MW1084GH71C4		326	148	348	158
		MW1084GH71D4		326	148	348	158
		MW1084GH71E4		329	149	351	159
		MW1084GH80F4		333	151	355	161
		MW1084GH80G4		337	153	359	163
		MW1084GH90H4		342	155	364	165
		MW1084GH90I4		347	157	369	167
		MW1084GH100J4		356	161	378	171
		MW1084GH112L4		383	174	405	184
		MW1085GH71C4		356	161	378	171
		MW1085GH71D4		356	161	378	171

* Weights are approximate

(L) – See footnotes page on the inside back cover

Weights – MSM 128

Unit size	Input configuration	Catalog number NEMA	Catalog number IEC	Output configuration – Universal mounting – B14 Weight (lbs) (L)	B14 Weight (Kg) (L)	B5 Weight (lbs) (L)	B5 Weight (Kg) (L)
128	Clamp Collar	**MW1282CN180TC**	**MW1282CI100D**	489	222	527	239
		–	MW1282CI112D	491	223	529	240
		MW1282CN210TC	MW1282CI132D	511	232	549	249
		MW1282CN250TC	MW1282CI160D	543	246	581	263
		MW1282CN280TC	MW1282CI180D	551	250	589	267
		–	MW1282CI200D	554	251	592	268
		MW1282CN320TC	–	588	267	626	284
		MW1282CN360TC	-	594	270	632	287
		MW1283CN140TC	MW1283CI90D	511	232	549	249
		MW1283CN180TC	MW1283CI100D	515	234	553	251
		–	MW1283CI112D	518	235	556	252
		MW1283CN210TC	MW1283CI132D	535	243	573	260
		MW1283CN250TC	MW1283CI160D	559	254	597	271
		MW1283CN280TC	MW1283CI180D	578	262	616	279
		–	MW1283CI200D	581	263	619	281
		MW1284CN56C	MW1284CI71D	541	245	578	262
		–	MW1284CI80D	545	247	582	264
		MW1284CN140TC	MW1284CI90D	545	247	582	264
		MW1284CN180TC	MW1284CI100D	550	249	587	266
		–	MW1284CI112D	552	250	589	267
		MW1284CN210TC	MW1284CI132D	566	257	603	273
		MW1285CN56C	MW1285CI71D	582	264	619	281
		–	MW1285CI80D	586	266	623	282
		MW1285CN140TC	MW1285CI90D	586	266	623	282
		MW1285CN180TC	MW1285CI100D	591	268	628	285
		–	MW1285CI112D	593	269	630	286
		MW1285CN210TC	MW1285CI132D	607	275	644	292
	3 Pc Coupled	**MW1282LN180TC**	**MW1282LI100D**	512	232	550	249
		–	MW1282LI112D	515	234	539	244
		MW1282LN210TC	MW1282LI132D	540	245	578	262
		MW1282LN250TC	MW1282LI160D	597	271	635	288
		MW1282LN280TC	MW1282LI180D	634	288	672	305
		–	MW1282LI200D	648	294	686	311
		MW1282LN320TC	MW1282LI225D	753	341	791	359
		MW1283LN140TC	MW1283LI90D	528	239	566	257
		MW1283LN180TC	MW1283LI100D	538	244	576	261
		–	MW1283LI112D	542	246	580	263
		MW1283LN210TC	MW1283LI132D	564	256	602	273
		MW1283LN250TC	MW1283LI160D	613	278	651	295
		MW1283LN280TC	MW1283LI180D	662	300	700	317
		–	MW1283LI200D	675	306	713	323
		MW1284LN56C	MW1284LI71D	549	249	586	266
		–	MW1284LI80D	561	254	598	271
		MW1284LN140TC	MW1284LI90D	561	254	598	271
		MW1284LN180TC	MW1284LI100D	568	258	605	274
		–	MW1284LI112D	576	261	613	278
		MW1284LN210TC	MW1284LI132D	584	265	621	282
		MW1285LN56C	MW1285LI71D	590	267	627	284
		–	MW1285LI80D	603	273	640	290
		MW1285LN140TC	MW1285LI90D	614	278	651	295
		MW1285LN180TC	MW1285LI100D	617	280	654	297
		–	MW1285LI112D	636	288	673	305
		MW1285LN210TC	MW1285LI132D	593	269	630	286
	Separate Group (Inch / Metric)	**MW1282SI100**	**MW1282SM100**	512	232	550	249
		MW1282SI112	MW1282SM112	515	234	553	251
		MW1282SI132	MW1282SM132	531	241	569	258
		MW1282SI160	MW1282SM160	618	280	656	298
		MW1282SI180	MW1282SM180	632	287	670	304
		MW1282SI225	MW1282SM225	695	315	733	332
		MW1283SI90	MW1283SM90	518	235	556	252

* Weights are approximate

(L) – See footnotes page on the inside back cover

Weights – MSM 128

				Output configuration			
				Universal mounting			
				B14		B5	
Unit size	Input configuration	Catalog number		Weight (lbs) (L)	Weight (Kg) (L)	Weight (lbs) (L)	Weight (Kg) (L)
		NEMA	IEC				
128	Separate Group (Inch / Metric) (cont.)	**MW1283SI100**	**MW1283SM100**	527	239	565	256
		MW1283SI112	MW1283SM112	530	240	568	258
		MW1283SI132	MW1283SM132	609	276	647	293
		MW1283SI160	MW1283SM160	633	287	671	304
		MW1283SI180	MW1283SM180	658	298	696	316
		MW1284SI71	MW1284SM71	544	241	581	263
		MW1284SI80	MW1284SM80	553	251	590	267
		MW1284SI90	MW1284SM90	553	251	590	267
		MW1284SI100	MW1284SM100	559	253	596	270
		MW1284SI112	MW1284SM112	567	257	604	274
		MW1284SI132	MW1284SM132	585	265	622	282
		MW1285SI71	MW1285SM71	591	268	628	285
		MW1285SI80	MW1285SM80	599	272	636	288
		MW1285SI90	MW1285SM90	599	272	636	288
		MW1285SI100	MW1285SM100	608	276	645	292
		MW1285SI112	MW1285SM112	611	277	648	294
		MW1285SI132	MW1285SM132	632	287	669	303
	Integral Gearmotor (Hp)	**MW1282GH100J4**	–	518	235	556	252
		MW1282GH112L4		534	242	572	259
		MW1282GH132M4		607	275	645	293
		MW1282GH132N4		638	289	676	307
		MW1282GH160P4		725	329	763	346
		MW1282GH160Q4		782	355	820	372
		MW1282GH180R4		826	375	864	392
		MW1282GH180S4		848	385	886	402
		MW1282GH200T4		954	433	992	450
		MW1283GH90H4		527	239	565	256
		MW1283GH90I4		532	241	570	259
		MW1283GH100J4		539	244	577	262
		MW1283GH112L4		561	254	599	272
		MW1283GH132M4		630	286	668	303
		MW1283GH132N4		661	300	699	317
		MW1283GH160P4		741	336	779	353
		MW1283GH160Q4		798	362	836	379
		MW1283GH180R4		854	387	892	405
		MW1283GH180S4		876	397	914	415
		MW1284GH71C4		545	247	582	264
		MW1284GH71D4		545	247	582	264
		MW1284GH71E4		548	248	585	265
		MW1284GH80F4		552	250	589	267
		MW1284GH80G4		556	252	593	269
		MW1284GH90H4		561	254	598	271
		MW1284GH90I4		566	257	603	273
		MW1284GH100J4		575	261	612	277
		MW1284GH112L4		602	273	639	290
		MW1284GH132M4		632	287	669	303
		MW1285GH71C4		590	267	627	284
		MW1285GH71D4		590	267	627	284
		MW1285GH71E4		594	269	631	286
		MW1285GH80F4		594	269	631	286

* Weights are approximate

(L) – See footnotes page on the inside back cover

Weights – MSM 148

Unit size	Input configuration	Catalog number		Output configuration			
				Universal mounting			
				B14		B5	
		NEMA	IEC	Weight (lbs) (L)	Weight (Kg) (L)	Weight (lbs) (L)	Weight (Kg) (L)
148	Clamp Collar	**MW1482CN210TC**	**MW1482CI132D**	730	331	772	350
		MW1482CN250TC	MW1482CI160D	751	341	793	360
		MW1482CN280TC	MW1482CI180D	769	349	811	368
		–	MW1482CI200D	771	350	813	369
		MW1482CN320TC	–	799	362	841	381
		MW1482CN360TC	–	849	385	891	404
		MW1483CN180TC	MW1483CI100D	742	337	784	356
		–	MW1483CI112D	744	337	786	356
		MW1483CN210TC	MW1483CI132D	759	344	801	363
		MW1483CN250TC	MW1483CI160D	782	355	824	374
		MW1483CN280TC	MW1483CI180D	800	363	842	382
		–	MW1483CI200D	803	364	845	383
		MW1483CN320TC	–	833	378	875	397
		MW1484CN56C	MW1484CI71D	759	344	820	372
		–	MW1484CI80D	763	346	824	374
		MW1484CN140TC	MW1484CI90D	763	346	824	374
		MW1484CN180TC	MW1484CI100D	768	348	829	376
		–	MW1484CI112D	770	349	831	377
		MW1484CN210TC	MW1484CI132D	784	356	845	383
		MW1485CN56C	MW1485CI71D	800	363	861	391
		–	MW1485CI80D	804	365	865	392
		MW1485CN140TC	MW1485CI90D	804	365	865	392
		MW1485CN180TC	MW1485CI100D	809	367	870	395
		–	MW1485CI112D	811	368	872	396
		MW1485CN210TC	MW1485CI71D	825	374	886	402
	3 Pc Coupled	**MW1482LN210TC**	**MW1482LI132D**	759	344	801	363
		MW1482LN250TC	MW1482LI160D	804	365	846	384
		MW1482LN280TC	MW1482LI180D	852	386	894	405
		–	MW1482LI200D	865	392	907	411
		MW1482LN320TC	MW1482LI225D	964	437	1006	456
		MW1482LN360TC	MW1482LI250D	1042	473	1084	492
		MW1483LN180TC	MW1483LI100D	765	347	807	366
		–	MW1483LI112D	768	348	810	367
		MW1483LN210TC	MW1483LI132D	788	357	830	376
		MW1483LN250TC	MW1483LI160D	836	379	878	398
		MW1483LN280TC	MW1483LI180D	884	401	926	420
		–	MW1483LI200D	897	407	939	426
		MW1483LN320TC	MW1483LI225D	998	453	1040	473
		MW1484LN56C	MW1484LI71D	767	348	828	376
		–	MW1484LI80D	779	353	840	381
		MW1484LN140TC	MW1484LI90D	779	353	840	381
		MW1484LN180TC	MW1484LI100D	786	357	847	384
		–	MW1484LI112D	794	360	855	388
		MW1484LN210TC	MW1484LI132D	802	364	863	391
		MW1485LN56C	MW1485LI71D	808	367	869	394
		–	MW1485LI80D	821	372	882	400
		MW1485LN140TC	MW1485LI90D	832	377	893	405
		MW1485LN180TC	MW1485LI100D	835	379	896	406
		–	MW1485LI112D	854	387	915	415
		MW1485LN210TC	MW1485LI132D	811	368	872	396
	Separate Group (Inch / Metric)	**MW1482SI132**	**MW1482SM132**	750	340	792	359
		MW1482SI160	MW1482SM160	771	350	813	369
		MW1482SI180	MW1482SM180	795	361	837	380
		MW1482SI225	MW1482SM225	851	386	893	405
		MW1482SI250	MW1482SM250	869	394	911	413
		MW1483SI100	MW1483SM100	754	342	796	361
		MW1483SI112	MW1483SM112	756	343	798	362

* Weights are approximate

(L) – See footnotes page on the inside back cover

Weights – MSM 148

Unit size	Input configuration	Catalog number		Output configuration			
				Universal mounting			
				B14		B5	
		NEMA	IEC	Weight (lbs) (L)	Weight (Kg) (L)	Weight (lbs) (L)	Weight (Kg) (L)
148	Separate Group (Inch / Metric) (cont.)	**MW1483SI132**	**MW1483SM132**	779	353	821	372
		MW1483SI160	MW1483SM160	802	364	844	383
		MW1483SI180	MW1483SM180	826	375	868	394
		MW1483SI225	MW1483SM225	885	401	927	420
		MW1484SI71	MW1484SM71	762	346	823	373
		MW1484SI80	MW1484SM80	771	350	832	377
		MW1484SI90	MW1484SM90	771	350	832	377
		MW1484SI100	MW1484SM100	777	352	838	380
		MW1484SI112	MW1484SM112	785	356	846	384
		MW1484SI132	MW1484SM132	803	364	864	392
		MW1485SI71	MW1485SM71	809	367	870	395
		MW1485SI80	MW1485SM80	817	371	878	398
		MW1485SI90	MW1485SM90	817	371	878	398
		MW1485SI100	MW1485SM100	826	375	887	402
		MW1485SI112	MW1485SM112	829	376	890	404
		MW1485SI132	MW1485SM132	850	386	911	413
	Integral Gearmotor (Hp)	**MW1482GH132M4**	–	826	375	868	394
		MW1482GH132N4		857	389	899	408
		MW1482GH160P4		932	423	974	442
		MW1482GH160Q4		990	449	1032	468
		MW1482GH180R4		1044	473	1086	493
		MW1482GH180S4		1066	483	1108	502
		MW1482GH200T4		1172	532	1214	551
		MW1483GH100J4		766	347	808	366
		MW1483GH112L4		787	357	829	376
		MW1483GH132M4		855	388	897	407
		MW1483GH132N4		885	401	927	420
		MW1483GH160P4		963	437	1005	456
		MW1483GH160Q4		1021	463	1063	482
		MW1483GH180R4		1076	488	1118	507
		MW1483GH180S4		1098	498	1140	517
		MW1483GH200T4		1204	546	1246	565
		MW1484GH71C4		763	346	824	374
		MW1484GH71D4		763	346	824	374
		MW1484GH71E4		766	347	827	375
		MW1484GH80F4		770	349	831	377
		MW1484GH80G4		774	351	835	379
		MW1484GH90H4		779	353	840	381
		MW1484GH90I4		784	356	845	383
		MW1484GH100J4		793	360	854	387
		MW1484GH112L4		820	372	881	400
		MW1484GH132M4		850	386	911	413
		MW1484GH132N4		861	391	922	418
		MW1485GH71C4		808	367	869	394
		MW1485GH71D4		808	367	869	394
		MW1485GH71E4		812	368	873	396
		MW1485GH80F4		812	368	873	396
		MW1485GH80G4		815	370	876	397
		MW1485GH90H4		820	372	881	400
		MW1485GH90I4		825	374	886	402
		MW1485GH100J4		832	377	893	405
		MW1485GH112L4		854	387	915	415
		MW1485GH132M4		951	431	1012	459
		MW1485GH132N4		951	431	1012	459

* Weights are approximate

(L) – See footnotes page on the inside back cover

Weights – MSM 168

Unit size	Input configuration	Catalog number		Output configuration			
				Universal mounting			
				B14		B5	
		NEMA	IEC	Weight (lbs) (L)	Weight (Kg) (L)	Weight (lbs) (L)	Weight (Kg) (L)
168	Clamp Collar	**MW1682CN210TC**	**MW1682CI132D**	1181	536	1252	568
		MW1682CN250TC	MW1682CI160D	1201	545	1272	577
		MW1682CN280TC	MW1682CI180D	1218	552	1289	585
		–	MW1682CI200D	1221	554	1292	586
		MW1682CN320TC	–	1248	566	1319	598
		MW1682CN360TC	–	1297	588	1368	620
		MW1683CN210TC	MW1683CI132D	1215	551	1286	583
		MW1683CN250TC	MW1683CI160D	1237	561	1308	593
		MW1683CN280TC	MW1683CI180D	1255	569	1326	601
		–	MW1683CI200D	1258	571	1329	603
		MW1683CN320TC	–	1287	584	1358	616
		MW1683CN360TC	–	1338	607	1409	639
		MW1684CN56C	MW1684CI71D	1263	573	1331	604
		–	MW1684CI80D	1267	575	1335	606
		MW1684CN140TC	MW1684CI90D	1267	575	1335	606
		MW1684CN180TC	MW1684CI100D	1272	577	1340	608
		–	MW1684CI112D	1274	578	1342	609
		MW1684CN210TC	MW1684CI132D	1288	584	1356	615
		MW1685CN56C	MW1685CI71D	1304	591	1372	622
		–	MW1685CI80D	1308	593	1376	624
		MW1685CN140TC	MW1685CI90D	1308	593	1376	624
		MW1685CN180TC	MW1685CI100D	1313	596	1381	626
		–	MW1685CI112D	1315	596	1383	627
		MW1685CN210TC	MW1685CI132D	1329	603	1397	634
	3 Pc Coupled	**MW1682LN210TC**	**MW1682LI132D**	1210	549	1281	581
		MW1682LN250TC	MW1682LI160D	1254	569	1325	601
		MW1682LN280TC	MW1682LI180D	1302	590	1373	623
		–	MW1682LI200D	1315	596	1386	629
		MW1682LN320TC	MW1682LI225D	1413	641	1484	673
		MW1682LN360TC	MW1682LI250D	1491	676	1562	708
		MW1683LN210TC	MW1683LI132D	1244	564	1315	596
		MW1683LN250TC	MW1683LI160D	1291	585	1362	618
		MW1683LN280TC	MW1683LI180D	1339	607	1410	639
		–	MW1683LI200D	1352	613	1423	645
		MW1683LN320TC	MW1683LI225D	1452	659	1523	691
		MW1683LN360TC	MW1683LI250D	1532	695	1603	727
		MW1684LN56C	MW1684LI71D	1271	577	1339	607
		–	MW1684LI80D	1283	582	1351	613
		MW1684LN140TC	MW1684LI90D	1283	582	1351	613
		MW1684LN180TC	MW1684LI100D	1290	585	1358	616
		–	MW1684LI112D	1298	589	1366	620
		MW1684CN210TC	MW1684LI132D	1306	592	1374	623
		MW1685LN56C	MW1685LI71D	1312	595	1380	626
		–	MW1685LI80D	1325	601	1393	632
		MW1685LN140TC	MW1685LI90D	1336	606	1404	637
		MW1685LN180TC	MW1685LI100D	1339	607	1407	638
		–	MW1685LI112D	1358	616	1426	647
		MW1685LN210TC	MW1685LI132D	1315	596	1383	627
	Separate Group (Inch / Metric)	**MW1682SI132**	**MW1682SM132**	1201	545	1272	577
		MW1682SI160	MW1682SM160	1221	554	1292	586
		MW1682SI180	MW1682SM180	1245	565	1316	597
		MW1682SI225	MW1682SM225	1300	590	1371	622
		MW1682SI250	MW1682SM250	1317	597	1388	629
		MW1683SI132	MW1683SM132	1235	560	1306	592
		MW1683SI160	MW1683SM160	1257	570	1328	602
		MW1683SI180	MW1683SM180	1282	581	1353	614

Weights – MSM 168

Unit size	Input configuration	Catalog number NEMA	Catalog number IEC	Output configuration – Universal mounting – B14 Weight (lbs) (L)	B14 Weight (Kg) (L)	B5 Weight (lbs) (L)	B5 Weight (Kg) (L)
168	Separate Group (Inch / Metric) (cont.)	**MW1683SI225**	**MW1683SM225**	1339	607	1410	639
		MW1683SI250	MW1683SM250	1359	616	1430	649
		MW1684SI71	MW1684SM71	1266	574	1334	605
		MW1684SI80	MW1684SM80	1275	578	1343	609
		MW1684SI90	MW1684SM90	1275	578	1343	609
		MW1684SI100	MW1684SM100	1281	581	1349	612
		MW1684SI112	MW1684SM112	1289	585	1357	616
		MW1684SI132	MW1684SM132	1307	593	1375	624
		MW1685SI71	MW1685SM71	1313	596	1381	626
		MW1685SI80	MW1685SM80	1321	599	1389	630
		MW1685SI90	MW1685SM90	1321	599	1389	630
		MW1685SI100	MW1685SM100	1330	603	1398	634
		MW1685SI112	MW1685SM112	1333	605	1401	635
		MW1685SI132	MW1685SM132	1354	615	1422	645
	Integral Gearmotor (Hp)	**MW1682GH132M4**	–	1277	579	1348	611
		MW1682GH132N4		1308	593	1379	625
		MW1682GH160P4		1382	627	1453	659
		MW1682GH160Q4		1440	653	1511	685
		MW1682GH180R4		1494	678	1565	710
		MW1682GH180S4		1516	688	1587	720
		MW1682GH200T4		1622	736	1693	768
		MW1683GH132M4		1311	595	1382	627
		MW1683GH132N4		1342	609	1413	641
		MW1683GH160P4		1419	644	1490	676
		MW1683GH160Q4		1476	669	1547	702
		MW1683GH180R4		1531	694	1602	727
		MW1683GH180S4		1553	704	1624	737
		MW1683GH200T4		1659	752	1730	785
		MW1684GH71C4		1267	575	1335	606
		MW1684GH71D4		1267	575	1335	606
		MW1684GH71E4		1270	576	1338	607
		MW1684GH80F4		1274	578	1342	609
		MW1684GH80G4		1278	580	1346	611
		MW1684GH90H4		1283	582	1351	613
		MW1684GH90I4		1288	584	1356	615
		MW1684GH100J4		1297	588	1365	619
		MW1684GH112L4		1324	601	1392	631
		MW1684GH132M4		1354	614	1422	645
		MW1685GH71C4		1312	595	1380	626
		MW1685GH71D4		1312	595	1380	626
		MW1685GH71E4		1316	597	1384	628
		MW1685GH80F4		1316	597	1384	628
		MW1685GH80G4		1319	598	1387	629
		MW1685GH90H4		1324	601	1392	631

* Weights are approximate

(L) – See footnotes page on the inside back cover

Notes

Notes

Accessories

Torque-Arm bracket

K

RHB flange style (BF) housing only

The Torque-Arm bracket can only be mounted onto the hole pattern of the flanged housing. Foot mounted units are incompatible with this option. Each kit includes a bracket, bushing, and hardware. The customer must supply the tie rod.

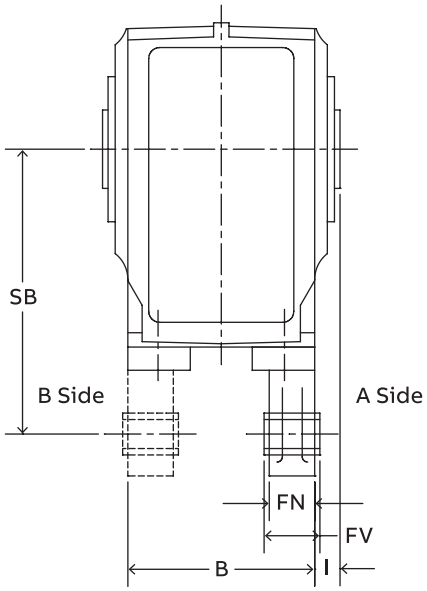

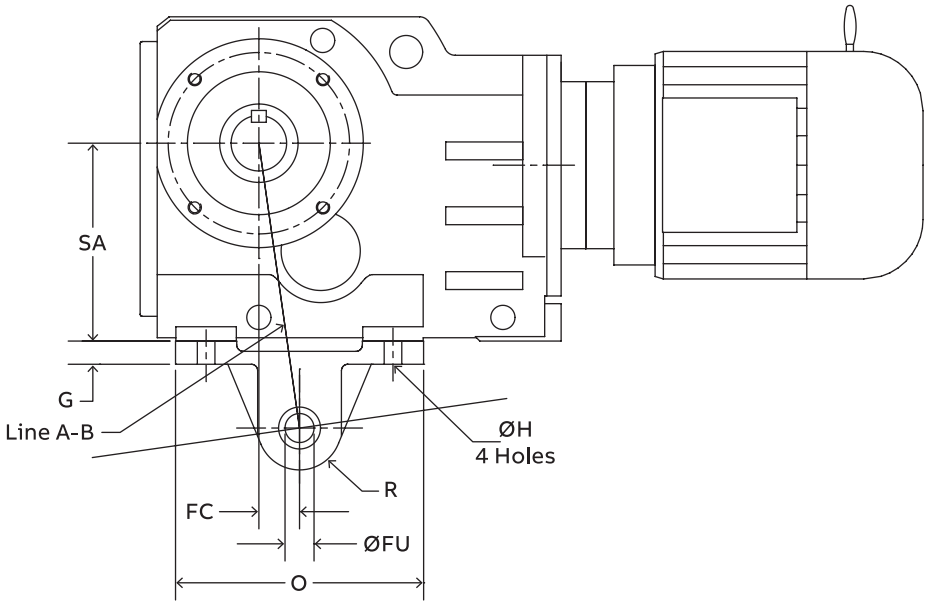

Dimension - inch/mm

Unit size	Part number	B	G	Ø H	I	O	R	FC	FN	FV	ØFU	SA	SB	Weight lbs
BF38	**085788**	3.94	0.51	0.43	0.39	5.79	0.87	0.93	0.94	1.1	0.47	3.94	5.51	1.3
		100	13	11	10	147	22	23.5	24	28	12	100	140	
BF48	**085821**	4.33	0.51	0.43	0.79	6.69	1.34	1.18	1.42	1.65	0.71	4.41	6.3	2.9
		110	13	11	20	170	34	30	36	42	18	112	160	
BF58	**085839**	5.51	0.59	0.53	0.79	7.17	1.34	1.34	1.42	1.65	0.71	5.20	7.56	3.7
		140	15	13.5	20	182	34	34	36	42	18	132	192	
BF68	**085839**	5.51	0.59	0.53	0.79	7.17	1.34	1.34	1.42	1.65	0.71	5.51	7.87	3.7
		140	15	13.5	20	182	34	34	36	42	18	140	200	
BF88	**085857**	6.69	0.79	0.69	0.79	8.03	1.57	1.46	1.97	2.2	0.98	7.09	9.84	6.4
		170	20	17.5	20	204	40	37	50	56	25	180	250	
BF108	**085875**	8.27	0.98	0.69	0.59	10.83	1.57	1.87	1.97	2.2	0.98	8.35	11.81	11
		210	25	17.5	15	275	40	47.5	50	56	25	212	300	
BF128	**085893**	10.04	1.18	0.87	0.89	12.91	1.57	1.61	1.97	2.2	0.98	10.43	13.78	14
		255	30	22	22.5	328	40	41	50	56	25	265	350	
BF148	**085917**	11.26	1.42	1.02	1.26	14.96	2.56	1.77	3.15	3.46	1.57	12.4	17.72	37
		286	36	26	32	380	65	45	80	88	40	315	450	
BF168	**085944**	12.76	1.57	1.3	1.69	18.11	2.56	2.36	3.15	3.46	1.57	14.76	21.65	52
		324	40	33	43	460	65	60	80	88	40	375	550	

See page ENG-16 for Instructions for Use.

ØFU = Bore of bushing in bracket

Tie rod kit

RHB flange style (BF) housing only

Tie rod kits are available for restraining hollow shaft reducers with the flanged housing. Each kit includes the mounting block, tie rods, turnbuckle, fulcrum, and the mounting hardware.

Note: Tie rods should be used in tension, not compression, to achieve the rated performance.

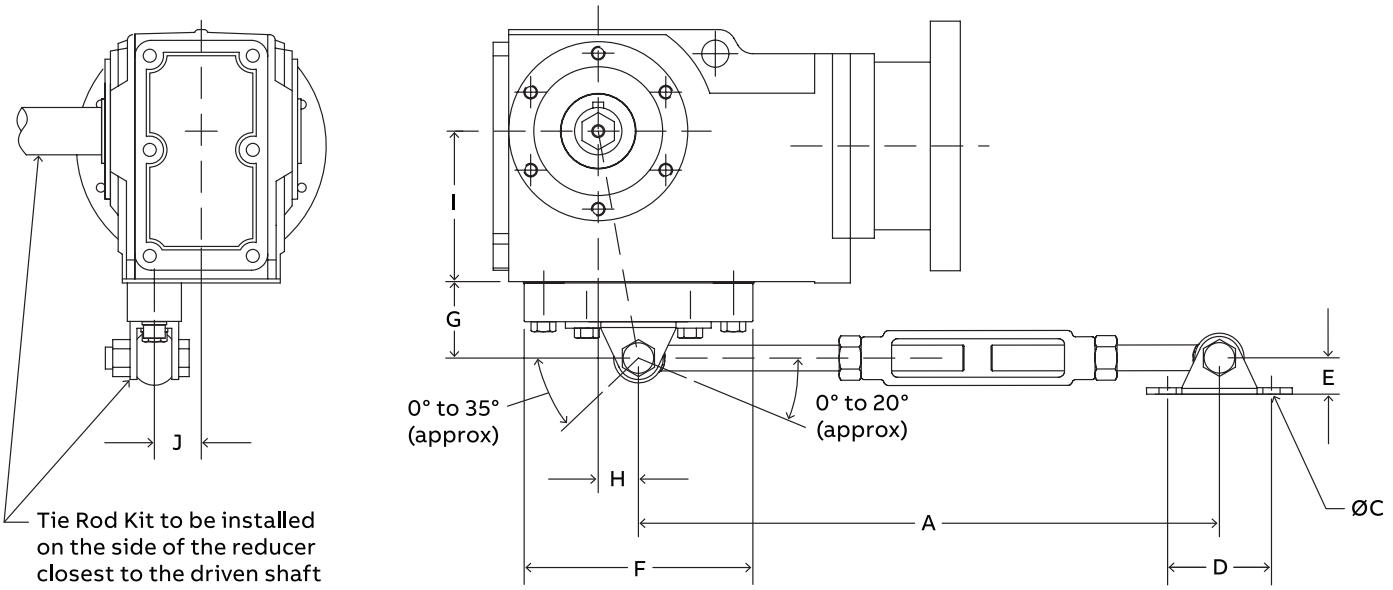

Dimension - inch

Unit Size	Part number	A (min-max)	ØC	D	E	F	G	H	I	J
BF38	094371	27.00 - 33.00	0.45	3.00	1.06	5.75	2.31	0.93	3.94	1.18
BF48	094201	27.00 - 33.00	0.45	3.00	1.06	6.63	2.19	1.18	4.41	1.38
BF58	094202	27.00 - 33.00	0.45	3.00	1.06	7.75	2.06	1.34	5.20	1.73
BF68	094202	27.00 - 33.00	0.45	3.00	1.06	7.75	2.06	1.34	5.51	1.73
BF88	094372	29.00 - 35.00	0.52	4.00	1.75	8.75	2.88	1.46	7.09	2.27
BF108	094373	29.50 - 35.50	0.69	4.75	2.00	11.50	3.13	1.87	8.35	3.05
BF128	094374	30.00 - 36.00	0.81	7.03	3.13	12.75	5.13	1.61	10.43	3.84
BF148	094375	30.00 - 36.00	0.81	7.03	3.13	14.88	4.63	1.77	12.40	4.14
BF168	094376	30.50 - 36.75	1.13	8.47	3.38	18.00	6.38	2.36	14.76	4.73

* Overall length can be reduce further (approximately 6 inches) by cutting the excess threaded rod from the tie rods
Please Note: Tie Rod Kits can only be mounted onto the hole pattern of the flanged housing. Foot mounted units are incompatible with this option
See page ENG-17 for instructions for use.

Banjo Torque-Arm

KT

RHB flange style (BF) housing only

The banjo Torque-Arm can only be mounted onto the hole pattern of the flanged housing. Foot mounted units are incompatible with this option. Each kit includes a banjo, bushing and hardware. The customer must supply the tie rod.

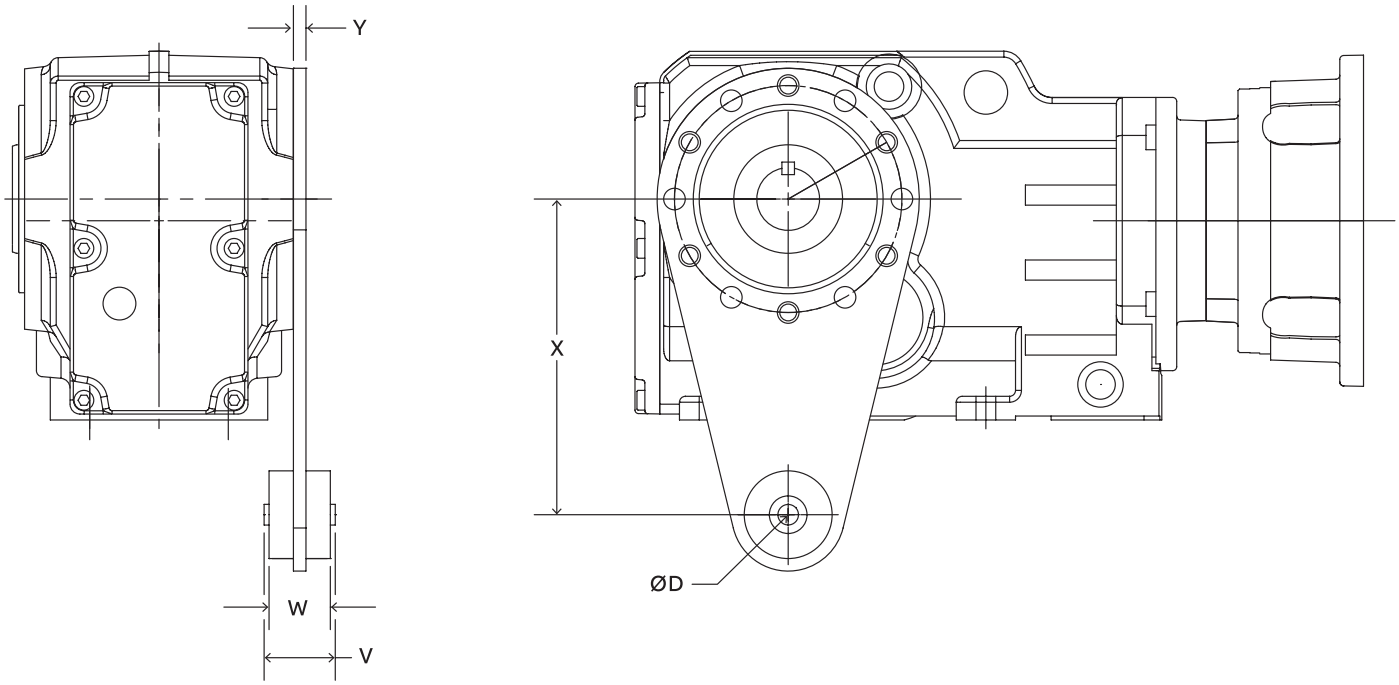

Dimensions – inch

Unit size	Part number	V	W	X	Y	ØD
BF38	**096720**	1.42	1.22	5.12	0.25	10.4mm
BF48	**096721**	1.42	1.22	6.30	0.25	10.4mm
BF58	**084544**	1.42	1.22	7.56	0.375	10.4mm
BF68	**096722**	1.42	1.22	7.87	0.375	10.4mm
BF88	**096723**	2.36	2.13	9.84	0.375	16.4mm
BF108	**096724**	2.36	2.13	11.81	0.50	16.4mm
BF128	**096725**	3.15	2.83	13.78	0.50	25mm
BF148	**096726**	3.15	2.83	17.72	0.50	25mm
BF168	**096727**	3.15	2.83	21.65	0.50	25mm

Note: White painted or stainless steel color painted options are available. Add "-WP" or "-SS" nomenclature to the end of the part number.
See pages ENG-18-19 for Instructions for use.

Stainless steel banjo Torque-Arm

RHB Food Safe (BU) housing style

KTS

The stainless steel banjo Torque-Arm is mounted onto the hole pattern of the housing.

The kit includes a banjo, bushing and hardware. The customer must supply the tie rod.

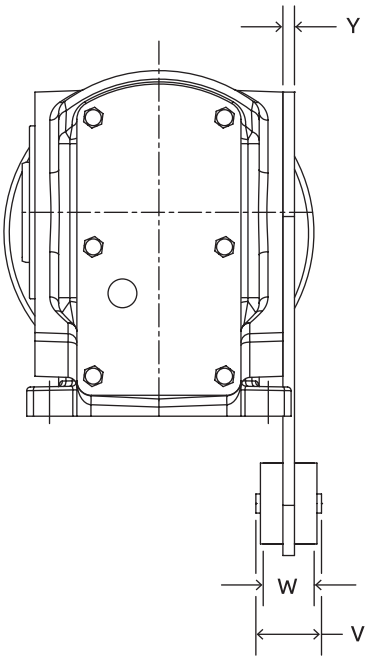

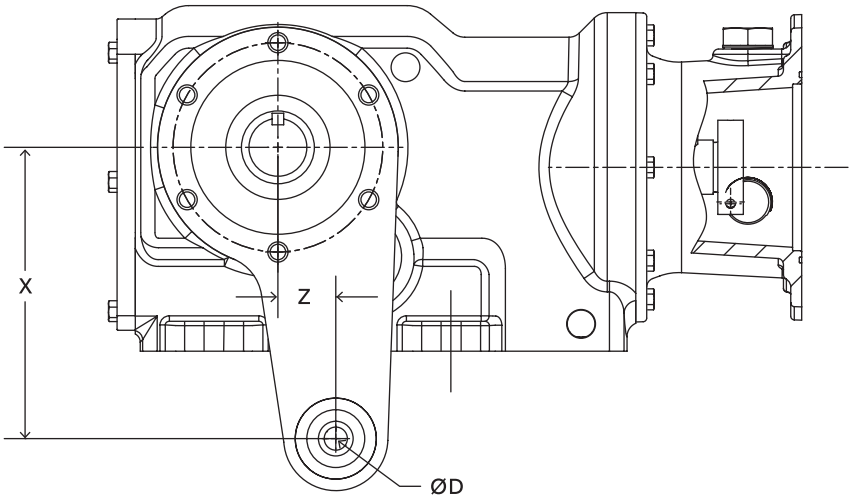

Dimensions – inch

Unit size	Part number	V	W	X	Z	Y	ØD
BU38	**096710**	1.42	1.22	5.12	0.85	0.25	10.4mm
BU48	**096711**	1.42	1.22	6.30	1.25	0.25	10.4mm

See pages ENG-18-19 for Instructions for use.

Torque-Arm bushing

MSM housing style only

B

The Torque-Arm bushing option comes with 2 bushings. The customer must provide the tie rod and necessary hardware.

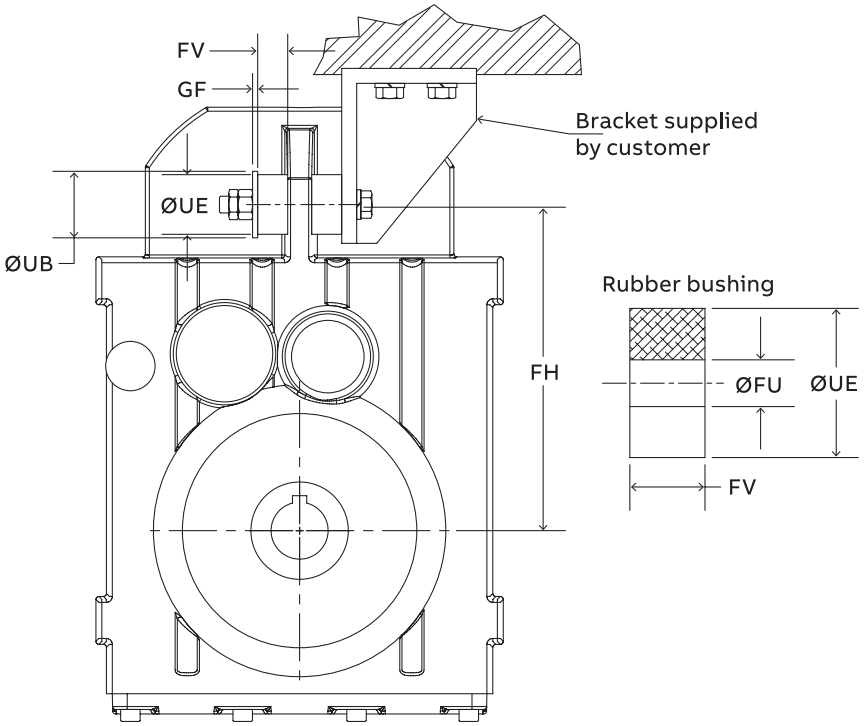

Dimensions - inch/mm

Unit size	Part number	FH	FV	ØUB	ØUE	ØFU	GF (min)
MW38	**086043**	6.18	0.59	1.57	1.18	0.41	0.10
		157	15	40	30	10.5	2.5
MW48	**086050**	7.28	0.79	1.97	1.57	0.49	0.12
		185	20	50	40	12.5	3
MW58	**086072**	7.55	0.79	1.97	1.57	0.49	0.12
		192	20	50	40	12.5	3
MW68	**086072**	8.58	0.79	1.97	1.57	0.49	0.12
		218	20	50	40	12.5	3
MW88	**086078**	10.95	1.18	2.95	2.36	0.83	0.16
		278	30	75	60	21	4
MW108	**086084**	13.62	1.18	2.95	2.36	0.83	0.16
		346	30	75	60	21	4
MW128	**086090**	15.55	1.57	3.94	3.15	0.98	0.24
		395	40	100	80	25	6
MW148	**086096**	19.09	1.57	3.94	3.15	0.98	0.24
		485	40	100	80	25	6
MW168	**086102**	21.65	1.97	5.51	4.72	1.22	0.31
		550	50	40	120	31	8

Material of Bushings: Natural rubber – Hardness 70 +/-5 Shore A, Temperature resistant from -40 to 176° F.

The ideal position for the tie rod is at right angles (90°) to a line between the point of attachment to the reducer and the output shaft with a ±30° tolerance. Shaft mounted units must have a torque restraint similar to that shown above. The rubber bushing is recommended to protect the unit from shock loads. The bolt through the rubber bushing must be tightened such that all play is eliminated.

End covers
RHB

Standard end covers

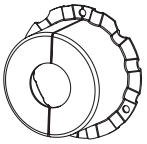

Open cover

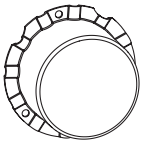

Closed cover

Metal detectable end covers

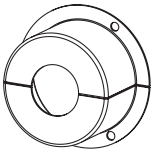

Open cover

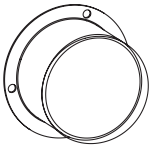

Closed cover

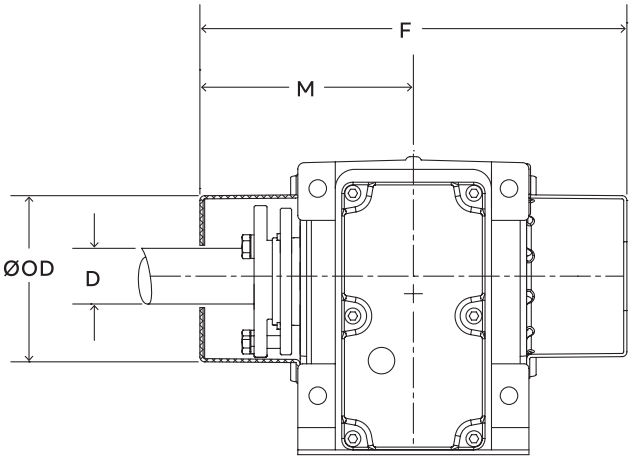

Foot mounted

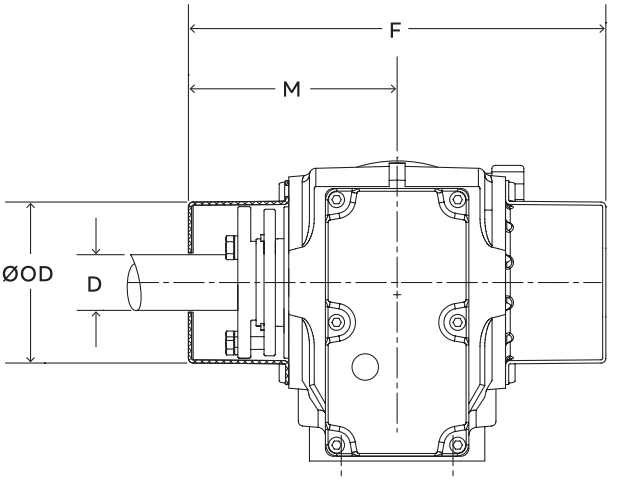

Flange mounted

Unit size	Standard end cover		Metal detectable end cover		Dimensions - inch			
	Closed cover kit	Open cover kit	Closed cover kit	Open cover kit	F	M	Ø OD	D
B_38	**095144**	**095143**	**095144-MD**	**095143-MD**	9.0	4.5	3.4	1.55
B_48	**095146**	**095145**	**095146-MD**	**095145-MD**	10.4	5.2	4.1	1.68
B_58	**095148**	**095147**	**095148-MD**	**095147-MD**	11.2	5.6	4.6	2.05
B_68	**095148**	**095147**	**095148-MD**	**095147-MD**	11.8	5.9	4.6	2.05
B_88	**095150**	**095149**	**095150-MD**	**095149-MD**	13.1	6.5	6.0	2.55
B_108	**095152**	**095151**	**095152-MD**	**095151-MD**	14.4	7.2	7.4	2.85

Unit size	Metal end covers		Dimensions - inch			
	Closed cover kit	Open cover kit	F	M	Ø OD	D
B_38	**094752**	**094751**	8.5	4.2	3.3	1.46
B_48	**093908**	**094753**	9.8	4.9	4.0	1.65
B_58	**094756**	**094755**	11.2	5.6	4.7	1.97
B_68	**094756**	**094755**	12.0	6.0	4.7	1.97
B_88	**094758**	**094757**	12.7	6.3	5.9	2.46
B_108	**094109**	**094108**	14.0	7.0	7.2	2.91
B_128	**094111**	**094110**	17.8	8.9	9.2	3.31
B_148	**094113**	**094112**	20.8	10.4	10.1	3.82
B_168	**094115**	**094812**	25.9	12.9	12.2	4.72

Notes:

- The standard covers are made from a durable plastic material and are resistant to most cleaning chemicals used in the food industry.
- Covers will not fit the reducers on the motor side
- The covers will fit MSM reducers equipped with Twin-tapered bushings, keyless bushings, and straight hollow shafts.
- The covers are NOT water tight but are designed to allow materials to be flushed from the inside of the covers through drain holes.
- Kits include one cover and corrosion resistant mounting hardware
- The open covers are split and can be installed after the reducer is mounted onto the driven shaft.

End covers
MSM

Standard end covers

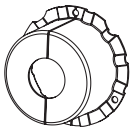

Open cover

Metal detectable end covers

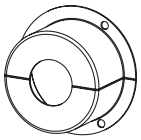

Open cover

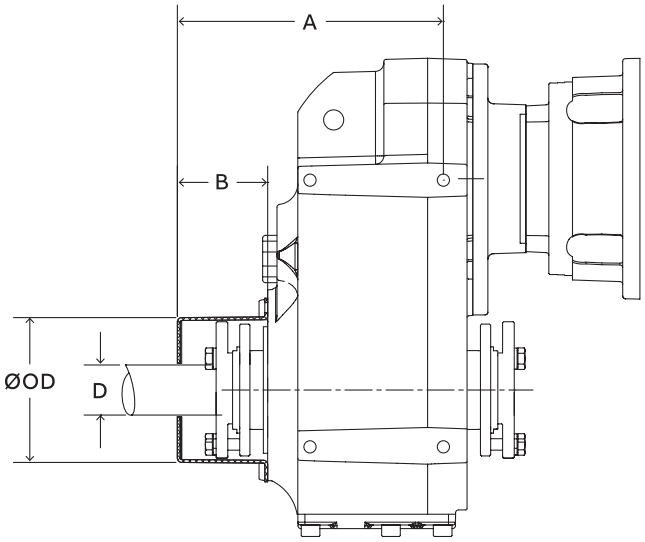

Unit size	Standard end cover	Metal detectable end cover	Dimensions			
	Open cover kit	Open cover kit	A	B	Ø OD	D
MW38	**095143**	**095143-MD**	6.3	2.4	3.1	1.55
MW48	**095145**	**095145-MD**	7.5	2.6	4.1	1.68
MW58	**095147**	**095147-MD**	8.2	2.7	4.6	2.05
MW68	**095147**	**095147-MD**	8.3	2.7	4.6	2.05
MW88	**095149**	**095149-MD**	9.6	2.8	6.0	2.55
MW108	**095151**	**095151-MD**	10.9	2.9	7.4	2.85

Unit size	Metal end covers	Dimensions			
	Open cover kit	A	B	Ø OD	D
MW38	**094751**	5.8	1.2	3.3	1.46
MW48	**094753**	6.4	1.6	4.0	1.65
MW58	**094755**	6.5	1.7	4.7	1.97
MW68	**094755**	6.6	1.7	4.7	1.97
MW88	**094757**	9.1	2.4	5.9	2.46
MW108	**094108**	10.4	2.4	7.2	2.91
MW128	**094110**	12.9	2.7	9.2	3.31
MW148	**094112**	14.1	3.2	10.1	3.82
MW168	**094812**	17.3	4.0	12.2	4.72

Notes:

- The standard covers are made from a durable plastic material and are resistant to most cleaning chemicals used in the food industry.
- Covers will not fit the reducers on the motor side
- The covers will fit MSM reducers equipped with Twin-tapered bushings, keyless bushings, and straight hollow shafts.
- The covers are NOT water tight but are designed to allow materials to be flushed from the inside of the covers through drain holes.
- Kits include one cover and corrosion resistant mounting hardware
- The open covers are split and can be installed after the reducer is mounted onto the driven shaft.

Additional accessories

Standard Breather

Reducer sizes	Size	Part number
48-128	G3/8"	186468
148-168	G3/4"	085527

The standard breather comes, unassembled, with Quantis case sizes 48-168. The breather provides ventilation to reduce pressure buildup and the internal filter keeps contaminants out.

Washdown Breather

Reducer sizes	Size	Part number
48-128	G3/8"	095333
148-168	G3/4"	094792

The washdown breather is a brass breather used for washdown applications. The metallic design is corrosion resistant and only opens to relieve pressure, preventing water ingress. The breather is automatically provided with E-Z Kleen protection level.

Hydra-Lock desiccant Breather

Reducer sizes	Size	Part number
48-68	HL-0	964372
88-168	HL-1	964364

The hydra-lock breather is a desiccant breather that is ideal for higher humidity and outdoor applications. It has a built in standpipe and check valve system to prevent interference with ambient conditions. The 3 micron filter is ideal for dusty applications.

Totally enclosed chamber Breather

Reducer sizes	Part number
48-128	240050
148-168	240051

The totally enclosed chamber breather is a fully enclosed canister style breather that allows no outside air to enter the reducer. This breather is good for high humidity and

Oil sump Breather

Reducer sizes	Part number
48-128	241103
148-168	241105

110 Volt, single phase, AC cartidge heater that threads into special tapped housing hole. Provides for approximately 70 degrees (F) temperature rise in one hour for cold climates.

Oil sight Breather

Reducer sizes	Size	Part number
48-128	G3/8"	084455
148-168	G3/4"	085946

The oil sight glass provides a visual indication of the oil level in the gearbox and provides a quick, efficient means to monitor t he oil level.

Note: Hydra-Lock and Enclosed chamber breathers, and oil sump heater are NPT style pipe threads. Teflon tape or any other thread sealant MUST be used to ensure proper pipe thread sealing.

Notes

Engineering

Additional Quantis selection instructions

Inertia ratio

For applications with more than one start/hour proceed use the following instructions to determine inertia ratio.

$$\text{Inertia ratio} = \frac{\text{reflected inertia}}{\text{moment of inertia of drive motor}}$$

Where: Drive motor inertia must be provided by the motor manufacturer. On Quantis gearmotors, driving inertia is available from your Dodge sales engineer or application engineering.

Reflected inertia is defined as the “load inertia” referred to the motor speed. The “load inertia” must be provided by the driven machine manufacturer. For assistance contact application engineering or see the following formulas.

$$\text{Reflected inertia (rotating)} = \text{Load Inertia X} \left(\frac{\text{Load RPM}}{\text{Motor RPM}}\right)^2$$

$$\text{Reflected inertia (linear)} = W \times \left(\frac{V}{6.28N}\right)^2$$

Where: W = Weight (lbs)
V = Linear Velocity (Ft. / Min.)
N = Motor RPM

With inertia ratio determined, refer to Chart 1 to select load classification , and apply to service factor Table 1 in Step 3 on page INTRO-13.

Chart 1 – Load classification

Load classification	Driven machine
I Light shocks	**Inertia ratio ≤ 0.3:**
II Moderate shocks	**Inertia ratio ≤ 3:**
III Heavy shocks	**Inertia ratio ≤ 10:**

Assembly and disassembly

bolts to be used on mounting feet

In addition to the bolts below, it is recommended that a lockwasher or other anti-loosening device be used.

Quantis ILH		
Unit size	**SAE Grade 5 inch**	**Grade 8.8 metric**
38	5/16-18 UNC	M8 x 1.25
48	1/2-13 UNC	M12 x 1.75
58	5/8-11 UNC	M16 x 2
68	5/8-11 UNC	M16 x 2
88	5/8-11 UNC	M16 x 2
108	3/4-10 UNC	M20 x 2.5
128	7/8-9 UNC	M24 x 3
148	1-1/4-7 UNC	M30 x 3.5
168	1-1/2-6 UNC	M36 x 4

Quantis RHB		
Unit size	**SAE Grade 5 inch**	**Grade 8.8 metric**
38	3/8-16 UNC	M10 x 1.5
48	3/8-16 UNC	M10 x 1.5
58	1/2-13 UNC	M12 x 1.75
68	1/2-13 UNC	M12 x 1.75
88	5/8-11 UNC	M16 x 2
108	7/8-9 UNC	M20 x 2.5
128	7/8-9 UNC	M24 x 3
148	1-1/4-7 UNC	M30 x 3.5
168	1-1/2-6 UNC	M36 x 4

Bolts and tightening torque for B5 output flanges

(Output flange to gearcase)

Product type	Unit size	Bolt - 8.8 Property class	Tightening torque (Nm)	Tightening torque (ft-lb)
ILH	38	M8	25	18
ILH	48	M10	50	37
ILH	58	M12	90	66
ILH	68	M12	90	66
ILH	88	M16	210	155
ILH	108	M16	210	155
ILH	128	M16	210	155
ILH	148	M16	210	155
ILH	168	M16	210	155
MSM/RHB	38	M8	25	18
MSM/RHB	48	M10	50	37
MSM/RHB	58	M12	90	66
MSM/RHB	68	M12	90	66
MSM/RHB	88	M12	90	66
MSM/RHB	108	M16	210	155
MSM/RHB	128	M16	210	155
MSM/RHB	148	M20	500	369
MSM/RHB	168	M20	500	369

Note: Metric course thread is standard for Quantis

NEMA C-face input flange details

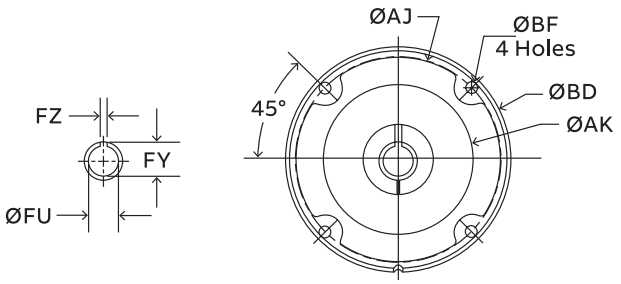

Clamp collar

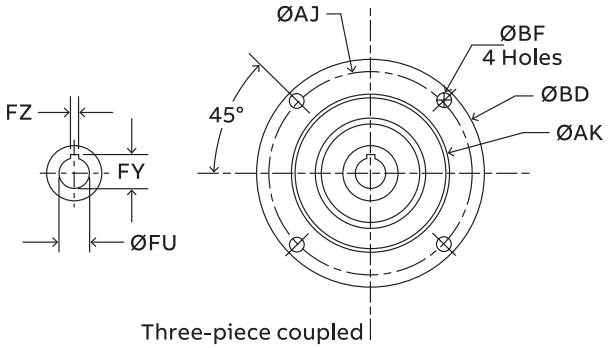

Three-piece coupled

NEMA clamp collar — **Dimensions – Inch**

Motor frame	ØAK	tol	ØAJ	ØBD	ØBF	ØFU	tol	FY	FZ
56C	4.500	+0.0009 -0.0000	5.870	6.61	0.43	0.625	+0.0007 -0.0000	0.709	0.188
140TC	4.500	+0.0009 -0.0000	5.870	6.61	0.43	0.875	+0.0008 -0.0000	0.964	0.188
180TC	8.500	+0.0011 -0.0000	7.250	8.98	0.53	1.125	+0.0008 -0.0000	1.241	0.250
210TC	8.500	+0.0011 -0.0000	7.250	9.02	0.53	1.375	+0.0010 -0.0000	1.518	0.310
250TC	8.500	+0.0011 -0.0000	7.250	10.23	0.53	1.625	+0.0010 -0.0000	1.796	0.375
280TC	10.500	+0.0013 -0.0000	9.000	11.89	0.53	1.875	+0.0010 -0.0000	2.096	0.500
320TC	12.500	+0.0014 -0.0000	11.000	14.01	0.67	2.125	+0.0016 -0.0004	2.350	0.500
360TC	12.500	+0.0014 -0.0000	11.000	14.01	0.67	2.375	+0.0016 -0.0004	2.651	0.625

NEMA three-piece coupled — **Dimensions – Inch**

Motor frame	ØAK	tol	ØAJ	ØBD	ØBF	ØFU	tol	FY	FZ
56C	4.500	+0.0009 -0.0000	5.870	6.61	0.43	0.625	+0.0007 -0.0000	0.709	0.188
140TC	4.500	+0.0009 -0.0000	5.870	6.61	0.43	0.875	+0.0008 -0.0000	0.964	0.188
180TC	8.500	+0.0011 -0.0000	7.250	8.98	0.53	1.125	+0.0008 -0.0000	1.241	0.250
210TC	8.500	+0.0011 -0.0000	7.250	8.98	0.53	1.375	+0.0010 -0.0000	1.518	0.310
250TC	8.500	+0.0011 -0.0000	7.250	10.12	0.53	1.625	+0.0010 -0.0000	1.796	0.375
280TC	10.500	+0.0013 -0.0000	9.020	11.26	0.53	1.875	+0.0010 -0.0000	2.096	0.500
320TC	12.500	+0.0013 -0.0000	10.980	13.98	0.67	2.125	+0.0012 -0.0000	2.350	0.500
360TC	12.500	+0.0014 -0.0000	10.980	13.98	0.67	2.375	+0.0012 -0.0000	2.651	0.625

NEMA C-face input flange details

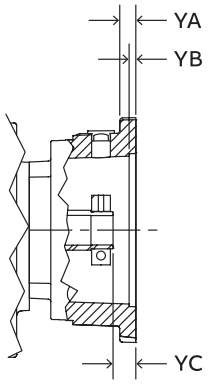

Clamp collar

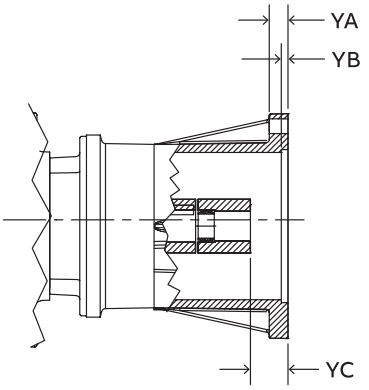

Three-piece coupled

NEMA C-face motor **Dimensions – Inch**

Motor frame	Clamp collar			Three-piece coupled		
	YA	YB	YC	YA	YB	YC
56C	0.47	0.20	0.67	0.55	0.20	1.08
140TC	0.47	0.20	0.67	0.55	0.20	1.10
180TC	0.73	0.22	0.91	0.73	0.22	1.65
210TC	0.69	0.22	0.89	0.87	0.22	2.01
250TC	0.95	0.20	1.13	0.95	0.20	2.17
280TC	0.95	0.20	1.30	0.95	0.20	2.57
320TC	1.02	0.20	1.19	1.02	0.20	2.99
360TC	1.02	0.20	1.48	1.02	0.20	3.26

IEC D-flange input flange details

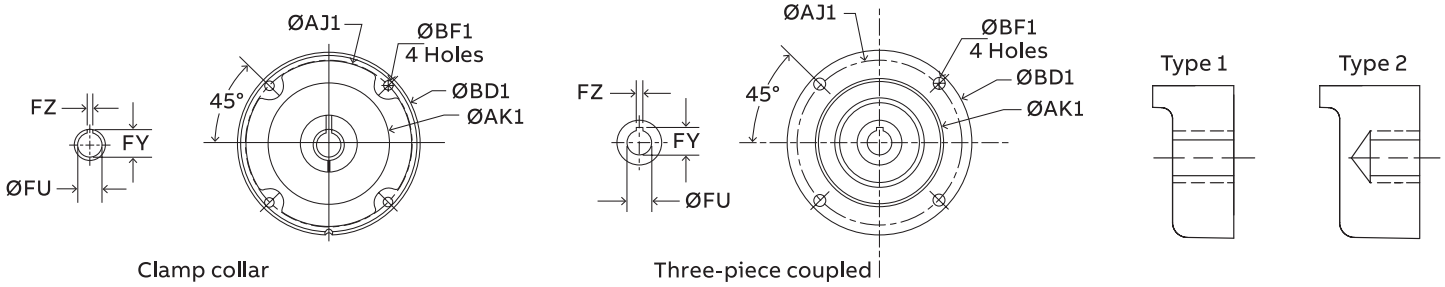

IEC clamp collar (requires B5 flange on mating motor) — **Dimensions – Inch**

Motor frame	ØAK1	tol	ØAJ1	ØBD1	ØBF1	Usable tap depth	Type	ØFU	tol	FY	FZ
71D	4.33	+0.0014 +0.0000	5.12	6.30	M8 x 17*	0.67	2	0.55	+0.0013 +0.0006	0.63	0.20
80D	5.12	+0.0016 +0.0000	6.50	7.87	M10	0.67	1	0.75	+0.0016 +0.0008	0.85	0.24
90D	5.12	+0.0016 +0.0000	6.50	7.87	M10	0.67	1	0.94	+0.0016 +0.0008	1.06	0.31
100D	7.09	+0.0016 +0.0000	8.46	9.84	M12	0.87	1	1.10	+0.0016 +0.0008	1.22	0.31
112D	7.09	+0.0016 +0.0000	8.46	9.84	M12	0.81	1	1.10	+0.0016 +0.0008	1.22	0.31
132D	9.06	+0.0018 +0.0000	10.43	11.81	M12	0.83	1	1.50	+0.0020 +0.0010	1.61	0.40
160D	9.84	+0.0018 +0.0000	11.81	13.78	M16	1.08	1	1.65	+0.0020 +0.0010	1.77	0.47
180D	9.84	+0.0018 +0.0000	11.81	13.78	M16 x 22 *	0.87	2	1.89	+0.0020 +0.0010	2.03	0.55
200D	11.81	+0.0020 +0.0000	13.78	15.75	M16	1.08	1	2.17	+0.0024 +0.0012	2.32	0.63

IEC three-piece coupled (requires B5 flange on mating motor) — **Dimensions – Inch**

Motor frame	ØfAK1	tol	ØAJ1	ØBD1	ØBF1	Usable tap depth	Type	ØFU	tol	FY	FZ
80D	5.12	+0.0016 +0.0000	6.50	7.87	M10	0.67	1	0.75	+0.0008 +0.0000	0.86	0.24
90D	5.12	+0.0016 +0.0000	6.50	7.87	M10	0.67	1	0.94	+0.0008 +0.0000	1.07	0.31
100D	7.09	+0.0016 +0.0000	8.46	9.84	M12	0.75	1	1.10	+0.0008 +0.0000	1.23	0.31
112D	7.09	+0.0016 +0.0000	8.46	9.84	M12	0.75	1	1.10	+0.0008 +0.0000	1.23	0.31
132D	9.06	+0.0018 +0.0000	10.43	11.81	M12	0.75	1	1.50	+0.0010 +0.0000	1.63	0.39
160D	9.84	+0.0018 +0.0000	11.81	13.78	M16	1.18	1	1.65	+0.0010 +0.0000	1.78	0.47
180D	9.84	+0.0028 +0.0000	11.81	13.78	M16	0.98	1	1.89	+0.0010 +0.0000	2.03	0.55
200D	11.81	+0.0032 +0.0000	13.78	15.75	M16	0.98	1	2.17	+0.0012 +0.0000	2.32	0.63
225D	13.78	+0.0035 +0.0000	15.75	17.72	M16	1.06	1	2.36	+0.0012 +0.0000	2.52	0.71
250D	17.72	+0.0038 +0.0000	19.69	21.65	M16	1.06	1	2.56	+0.0012 +0.0000	2.72	0.71

* Depth of usable thread

Note: Metric course thread is standard for Quantis

IEC input flange details

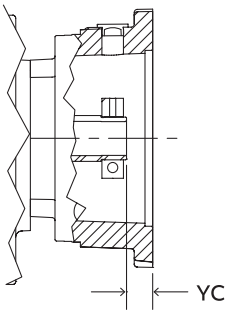

Clamp collar

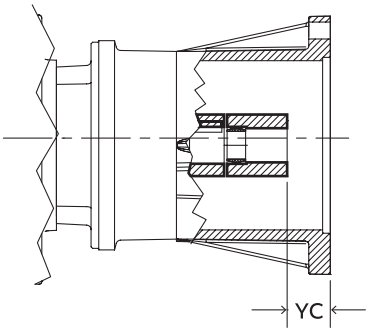

Three-piece coupled

IEC D flange motor — **Dimensions – Inch**

Motor frame	Clamp collar YC	Three-piece coupled YC
71D	0.16	–
80D	0.61	0.59
90D	0.61	1.02
100D	0.28	1.18
112D	0.28	1.18
132D	0.87	1.77
160D	0.79	2.60
180D	0.85	2.32
200D	1.18	2.36
225D	–	3.54
250D	–	2.95

Separate input – shaft details

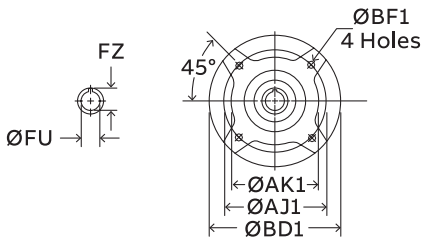

Separate groups
71-112

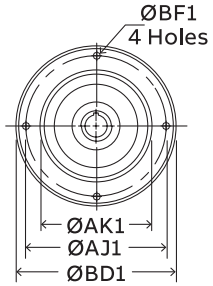

Separate groups
132-180

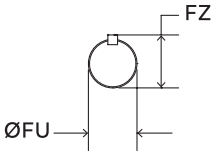

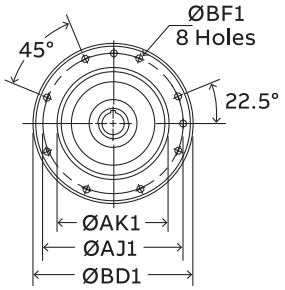

Separate groups
225-250

Separate input **Inch/mm**

	ØBD1	ØAK1	tol	ØAJ 1	ØBF1 x depth (G)	ØFU	tol	FZ
71	5.35	3.740	+0.0005 -0.0004	4.57	M8 x 0.55	0.625	+0.0000 -0.0005	0.71
	136	95	+0.013 -0.009	116	M8 x 14	16	+0.012 +0.001	18
80	5.51	3.740	+0.0005 -0.0004	4.57	M8 x 0.55	0.750	+0.0000 -0.0005	0.84
	140	95	+0.013 -0.009	116	M8 x 14	19	+0.015 +0.002	21.5
90	5.51	3.740	+0.0005 -0.0004	4.57	M8 x 0.55	0.875	+0.0000 -0.0005	0.96
	140	95	+0.013 -0.009	116	M8 x 14	24	+0.015 +0.002	27
100	6.85	4.724	+0.0005 -0.0004	5.71	M10 x 0.67	1.125	+0.0000 -0.0005	1.24
	174	120	+0.013 -0.009	145	M10 x 17	28	+0.015 +0.002	31
112	7.01	4.724	+0.0005 -0.0004	5.71	M10 x 0.67	1.250	+0.0000 -0.0005	1.37
	178	120	+0.013 -0.009	145	M10 x 17	28	+0.015 +0.002	31
132	8.43	6.299	+0.0006 -0.0004	7.24	M10 x 0.67	1.375	+0.0000 -0.0005	1.52
	214	160	+0.014 -0.011	184	M16 x 22	38	+0.018 +0.002	41
160	9.88	6.299	+0.0006 -0.0004	7.24	Ml 6 x 0.87	1.625	+0.0000 -0.0010	1.80
	251	160	+0.014 -0.011	184	M16 x 28	42	+0.018 +0.002	45
180	11.65	7.677	+0.0006 -0.0005	9.06	M16 x 1.10	2.125	+0.0000 -0.0010	2.35
	296	195	+0.016 -0.013	230	M16 x 28	55	+0.021 +0.002	59
225	13.46	9.843	+0.0006 -0.0005	11.81	M16 x 0.87	2.125	+0.0000 -0.0010	2.35
	342	250	+0.016 -0.013	300	M16 x 22	60	+0.030 +0.011	64
250	15.59	9.843	+0.0006 -0.0005	11.81	M16 x 0.87	2.375	+0.0000 -0.0010	2.65
	396	250	+0.016 -0.013	300	M16 x 22	65	+0.030 +0.011	69

(G) See footnote on inside back cover

Note: Metric course thread is standard for Quantis

Twin-tapered bushings installation

Installation instructions for Dodge Quantis MSM and RHB reducers

WARNING

To ensure that the drive is not unexpectedly started, turn off and lock out or tag power source before proceeding. Failure to observe these precautions could result in bodily injury.

CAUTION

Be sure screws do not contact seal face once torqued to the proper specification

The Dodge Quantis reducer is designed to fit both standard and short length driven shafts. The Standard Taper Bushing series is designed where shaft length is not a concern. The Short Shaft Bushing series is to be used where the driven shaft does not extend through the reducer.

Figure 1

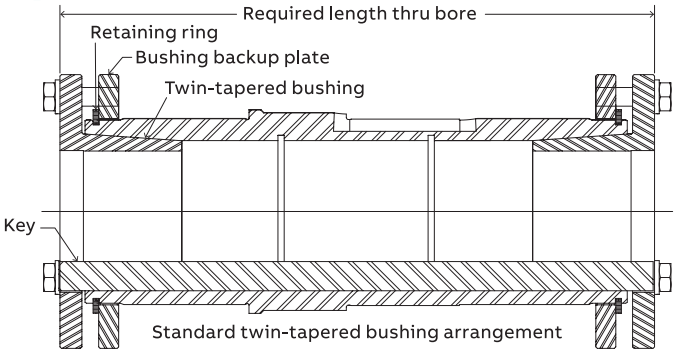

Standard taper bushings:

1. One bushing assembly is required to mount the reducer on the driven shaft. An assembly consists of two tapered bushings, bushing screws and washers, two bushing backup plates and retaining rings, and necessary shaft key or keys. The driven shaft must extend through the full length of the reducer. If the driven shaft does not extend through the reducer, do not use the standard tapered bushings; instead use the short shaft bushings as described in the Short Shaft Bushing section that follows. The minimum shaft length as measured from the end of the shaft to the outer edge of the bushing flange (See Figure 3) is given in Table 1.
2. Install one bushing backup plate on the end of the hub and secure with the supplied retaining ring. Repeat procedure for the other side.
3. Place one bushing, flange end first, onto the driven shaft and position per dimensions “A”, as shown in Table 2. This will allow the bolts to be threaded into the bushing for future bushing and reducer removal.
4. Insert the output key in the shaft and bushing. For ease of installation, rotate the driven shaft so that the shaft keyseat is at the top position.
5. Mount the reducer on the driven shaft and align the shaft key with the reducer hub keyway. Maintain the recommended minimum distance “A” from the shaft bearings.
6. Insert the screws with the washers installed, in the unthreaded holes in the bushing flange and align with the threaded holes in the bushing backup plate. If necessary, rotate the bushing backup plate to align with the bushing screws. Tighten the screws lightly. If the reducer must be positioned closer than the dimensions “A”, place the screws with washers installed, in the unthreaded holes in the bushing before positioning reducer making sure to maintain at least 1/8” between the screw heads and the bearing.a
7. Place the second tapered bushing in position on the shaft and align the bushing keyway with the shaft key. Align the unthreaded holes in the bushing with the threaded holes in the bushing backup plate. If necessary, rotate the bushing backup plate to align with the bushing holes. Insert the bushing screws with washers installed in the unthreaded holes in the bushing. Tighten screws lightly.
8. Alternately and evenly tighten the screws in the bushing nearest the equipment to the recommended torque given in Table. Repeat the procedure for the outer bushing.

Figure 2

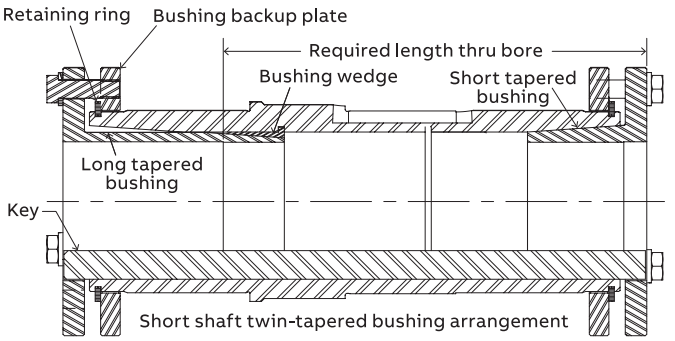

Figure 3

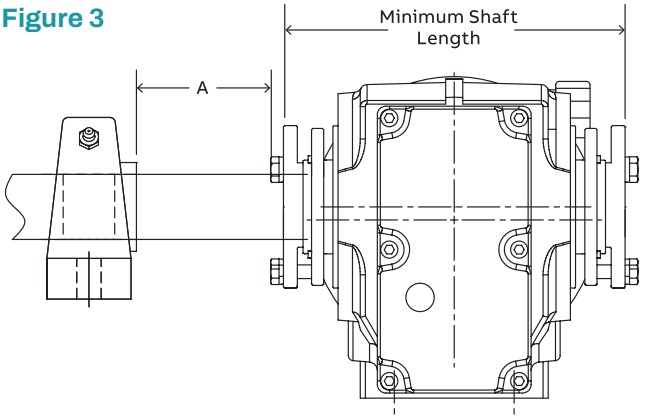

Twin-tapered bushings installation

Installation instructions for Dodge Quantis MSM and RHB reducers (cont.)

Short shaft bushings

1. One bushing assembly is required to mount the reducer on the driven shaft. An assembly consists of one long tapered bushing, one short tapered bushing, one tapered bushing wedge, bushing screws and washers, two bushing backup plates, retaining rings, and necessary shaft key or keys. The driven shaft does not need to extend through the reducer for the short shaft bushing to operate properly. The minimum shaft length as measured from the end of the shaft to the outer edge of the bushing flange (See Figure 3) is given in Table 1.
2. Determine which side the long bushing will be installed from. The long bushing may be installed from either side of the reducer.
3. Install the tapered bushing wedge from the same side as the long bushing will be installed from. Install the tapered bushing wedge into the reducer hub so that the flange is installed first and the thin taper is pointing outwards. The bushing is properly installed when it snaps into place in the reducer hub.
4. Align the tapered bushing wedge keyway with the reducer hub keyway. The keyway in the wedge is slightly wider than the keyway in the reducer hub allowing for easier installation.
5. Install one bushing backup plate on the end of the hub and secure with the supplied retaining ring.
   Repeat procedure for other side.
6. If installing the long bushing on side A, install the short bushing; flange first, on the driven shaft and position per dimensions “A”, as shown in Table 2. This will allow the bolts to be threaded into the bushing for future bushing and reducer removal.
7. Insert the output key in the shaft and bushing. For ease of installation, rotate the driven shaft so that the shaft keyseat is at the top position.
8. Mount the reducer on the driven shaft and align the shaft key with the reducer hub keyway. Maintain the recommended minimum distance “A” from the shaft bearings.
9. Insert the screws, with washers installed, in the unthreaded holes in the bushing flange and align with the threaded holes in the bushing backup plate. If necessary, rotate the bushing backup plate to align with the bushing screws. Tighten the screws lightly. If the reducer must be positioned closer than dimension “A”, place the screws, with washers installed in the unthreaded holes in the bushing before positioning the reducer making sure to maintain at least 1/8” between the screw heads and the bearing.
10. Place the long bushing in position on the shaft and align the bushing keyway with the shaft key. Use care to locate the long bushing with the tapered bushing wedge installed earlier. Align the unthreaded holes in the bushing with the threaded holes in the bushing backup plate. If necessary, rotate the bushing backup plate to align with the bushing holes. Insert bushing screws, with washers installed in the unthreaded holes in the bushing. Tighten screws lightly.
11. Alternately and evenly tighten the screws in the bushing nearest the equipment to the recommended torque, given in Table 2. Repeat procedure for the outer bushing.

Bushing Removal for Standard Taper or Short Shaft Bushings:

1. Remove bushing screws.
2. Place the screws in the threaded holes provided in the bushing flanges. Tighten the screws alternately and evenly until the bushing are free on the shaft. For ease of tightening screws, make sure screw threads and threaded holes in the bushing flanges are clean. If the reducer was positioned closer than the recommended minimum distance “A” as shown in Table 2, loosen the inboard bushing screws until they are clear of the bushing flange by 1/8”. Locate two (2) wedges at 180 degrees between the bushing flange and the bushing backup plate. Drive the wedges alternately and evenly until the bushing is free on the shaft.
3. Remove the outboard bushing, the reducer and then the inboard bushings.

Table 1

Minimum required shaft length (in.)		
Unit size	Standard taper bushing	Short shaft bushing
38	6.75	5.1875
48	7.875	5.6875
68	9.375	7.25
88	10.50	7.5625
108	11.6875	8.875
128	14.875	11.375
148	16.75	13.1875
168	19.6875	16.00

Table 2

Bushing Screw Information and minimum clearance for removal			
Unit size	Fastener size	Tightening torque (ft-lb / Nm)	A* (inch)
38	5/16 - 18	17 ft-lb	1.25
	M8 x 1.25	28 Nm	
48 & 58	5/16 - 18	17 ft-lb	1.25
	M8 x 1.25	28 Nm	
68	3/8 - 16	31 ft-lb	1.50
	M10 x 1.5	55 Nm	
88	3/8 - 16	31 ft-lb	1.50
	M10 x 1.5	55 Nm	
108	3/8 - 16	31 ft-lb	1.50
	M10 x 1.5	55 Nm	
128	1/2 - 13	76 ft-lb	1.82
	M12 x 1.75	95 Nm	
148	1/2 - 13	76 ft-lb	1.82
	M12 x 1.75	95 Nm	
168	1/2 - 13	76 ft-lb	2.07
	M12 x 1.75	95 Nm	

*A dimension (Figure 3)

Straight hollow bore Installation

instructions for Dodge Quantis MSM and RHB reducers straight hollow bore

Please follow the instructions outlined below when assembling and disassembling this unit. Failure to follow the instructions as outlined below may result in damage to the gear unit or to the machine's drive shaft. For ease of assembly, it is recommended that the machine's drive shaft be chamfered. **Do not hammer the gearbox shaft onto the machine's drive shaft.** The machine's drive shaft should be produced in accordance with the dimensions shown on the accompanying Table 2.

Assembly:

All shaft mounted gearboxes are furnished with A) Retaining Ring B) Keeper plate C) Retaining Bolt D) Spring Washer and E) Dust Cap, as shown in the finished assembly, Figure 2. The gearbox is pulled onto the shaft by means of a threaded rod and nut assembly as shown in Figure 1 below. The threaded rod and drive spacer are not supplied. The threaded rod thread (M) is specified in Table 2. After the gearbox has been pulled completely onto the machine shaft firmly against the machine shaft backing shoulder, it must be locked in place with the retaining bolt as shown in Figure 2.

Disassembly:

Prior to disassembly, the dust cap, retaining bolt, spring washer, keeper plate and retaining ring must be removed. For ease of disassembly, it is recommended that the following tool be made and used as described: The round keyed nut (A) is inserted into the free space between the retaining ring in the gear unit's hollow shaft and the end of the machine's drive shaft. The removal bolt (B) is screwed into the nut (A) which presses a disk (C) against the machine's drive shaft. The resulting force pushes the gearbox off the machine's drive shaft. Reference Figure 3 for the disassembly arrangement.

Please note: The retaining bolt supplied with the gear unit cannot be used for this purpose and must be replaced with the bolt specified in Table 2. The round keyed nut and disk should be made from 1045 steel and removal bolt should be a minimum of SAE Grade 5.

Recommended tightening torque for retaining bolt

Table 1: Bolt thread size

M	Torque
3/8-16	142 in-lb
5/8-11	611 in-lb
3/4-10	1221 in-lb
1-8	2098 in-lb
M10	16 Nm
M12	28 Nm
M16	69 Nm
M20	138 Nm
M24	237 Nm

Figure 1

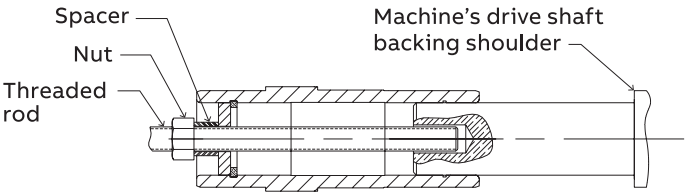

Figure 2

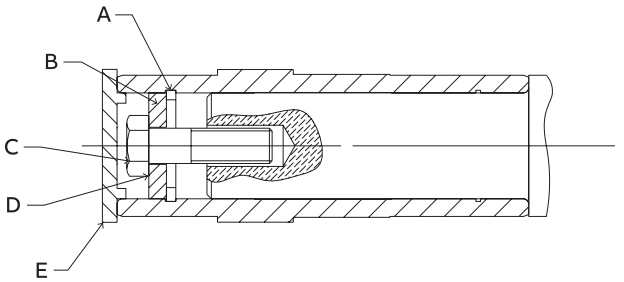

Figure 3

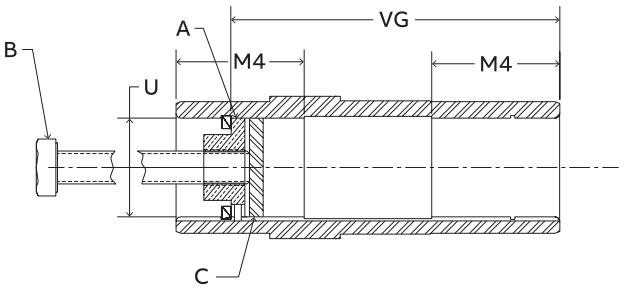

Straight hollow bore – inch shafts dimensions

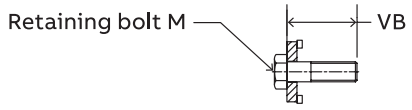

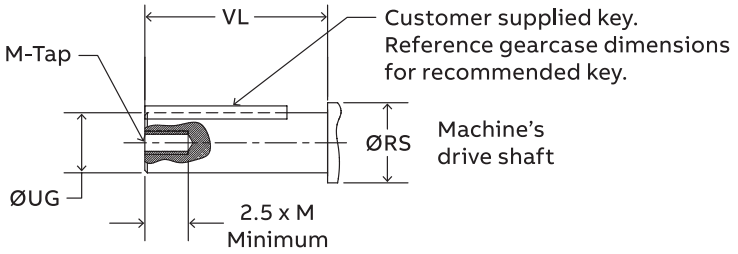

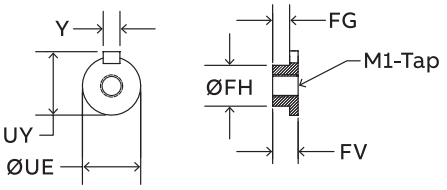

Round keyed nut

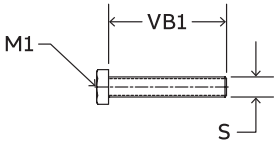

Removal bolt

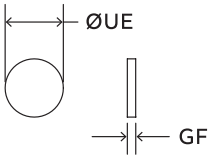

Disk

Table 2 - inch shafts — **Dimensions - inch**

Unit size	FG	ØFH	FV	GF	M	M1	M4	S	Ø U *	Y Max.	ØUE	ØUG	tol.	UY Max	VL	VB	VB1	VG	Ø RS ◊
38	0.38	0.75	0.625	0.12	3/8-16	3/8-16	1.73	0.31	1.250	0.250	1.245	1.250	+0.0000 -0.0006	1.367	3.50	1.75	6.00	4.02	1.75
48	0.38	0.93	0.625	0.12	3/8-16	5/8-18	2.28	0.50	1.375	0.312	1.370	1.375	+0.0000 -0.0006	1.52	4.50	1.75	7.00	5.04	1.875
58	0.38	1.06	0.625	0.12	5/8-11	3/4 - 10	2.48	0.63	1.500	0.375	1.495	1.500	+0.0000 -0.0006	1.669	5.00	1.75	7.50	5.59	2.00
					3/8-16				1.4375		1.433	1.4375	+0.0000 -0.0006	1.605					1.9375
68	0.50	1.06	0.875	0.25	5/8-11	3/4 - 10	2.72	0.63	1.500	0.375	1.495	1.500	+0.0000 -0.0006	1.669	5.25	2.25	8.00	5.91	2.00
					3/8-16				1.4375		1.433	1.4375	+0.0000 -0.0006	1.605					1.9375
88	0.50	1.37	0.813	0.25	3/4-10	7/8-14	3.07	0.81	2.000	0.500	1.995	2.000	+0.0000 -0.0007	2.22	6.50	2.25	9.50	7.09	2.50
					5/8-11				1.9375		1.933	1.9375	+0.0000 -0.0006	2.16					2.4375
108	0.50	1.75	1.00	0.31	3/4-10	7/8-14	3.66	0.81	2.375	0.625	2.370	2.375	+0.0000 -0.0007	2.65	7.25	3.00	12.50	8.19	2.875
									2.4375		2.433	2.4375	+0.0000 -0.0007	2.714					2.9375
128	0.50	2.00	1.00	0.31	3/4-10	7/8-14	4.84	0.81	2.750	0.625	2.745	2.750	+0.0000 -0.0007	3.03	9.5	3.00	14.00	10.35	3.25
									2.9375	0.750	2.933	2.9375	+0.0000 -0.0007	3.269					3.4375
148	0.50	2.62	1.25	0.31	1-8	1-1/4-12	5.83	1.00	3.625	0.875	3.620	3.625	+0.0000 -0.0009	4.01	11.00	3.00	16.00	12.20	4.125
									3.4375		3.433	3.4375	+0.0000 -0.0009	3.82					3.9375
168	0.50	3.00	1.25	0.31	1-8	1-1/4-12	6.89	1.00	4.000	1.000	3.995	4.000	+0.0000 -0.0009	4.44	13.25	3.00	18.50	14.41	4.50
									3.9375		3.933	3.9375	+0.0000 -0.0009	4.378					4.4375

* Hollow shaft tolerances (for dimension U) are shown in the gearbox dimension pages.
Tolerance for dimension UE should be -0.01 in for inch bore shafts
Bold shaft diameters indicate standard shaft
◊ RS dimension is the minimum recommended shaft shoulder diameter

Straight hollow bore – metric shafts dimensions

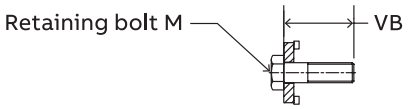

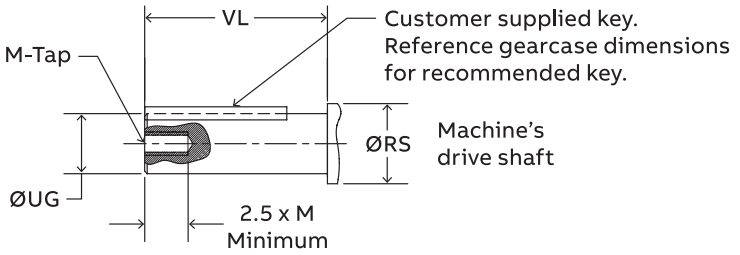

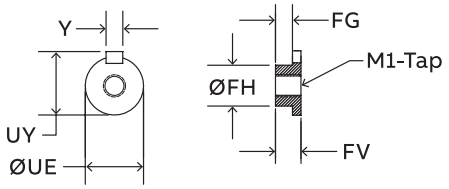

Round keyed nut

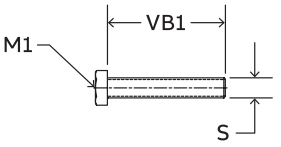

Removal bolt

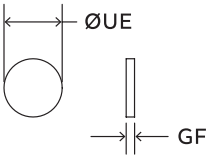

Disk

Table 2 - Metric shafts — **Dimensions - mm**

Unit size	FG	ØFH	FV	GF	M	M1	M4	S	Ø U *	Y Max.	ØUE	ØUG	tol.	UY Max	VL	VB	VB1	VG	Ø RS ◊
38	10	9	15	6	M10	M10 x 1.5	44	8	30	8	29.9	30	+0.000 -0.013	33	90	40	150	102	42
48	9	22	15	6	M12	M12 x 1.5	58	10	35	10	34.9	35	+0.0000 -0.0016	38	115	50	180	128	47
					M16				40	12	39.9	40	+0.000 -0.0016	43		60			52
58	11	24	17	6	M16	M16 x 1.5	63	12	40	12	39.9	40	+0.000 -0.0016	43	127	60	195	142	52
68	13	26	20	7	M16	M16 x 1.5	69	13	40	12	39.9	40	+0.0000 -0.0016	43	135	60	210	150	52
									45	14	44.9	45	+0.000 -0.0016	49					57
88	13	35	20	7	M16	M16 x 1.5	78	13	50	14	49.9	50	+0.0000 -0.0016	53	165	60	250	180	62
					M20				60	18	59.9	60	+0.000 -0.019	64		70			72
108	12	45	24	10	M20	M20 x 1.5	93	16	60	18	59.9	60	+0.0000 -0.0019	64	185	80	320	208	72
									70	20	69.9	70	+0.000 -0.019	74					82
128	12	52	24	10	M20	M20 x 1.5	123	16	70	20	69.9	70	+0.0000 -0.0019	74	240	80	360	263	82
									80	22	79.9	80	+0.000 -0.019	85		85			92
148	7	61	24	10	M20	M20 x 1.5	148	16	80	22	79.9	80	+0.0000 -0.0019	95	280	95	410	310	102
					M24				90	25	89.9	90	+0.000 -0.022						
168	8	79	30	10	M24	M24 x 1.5	175	20	100	28	99.9	100	+0.0000 -0.0022	106	330	95	470	366	112
									110		109.9	110	+0.000 -0.022	116		100			122

* Hollow shaft tolerances (for dimension U) are shown in the gearbox dimension pages.
Tolerance for dimension UE should be -0.01 in for inch bore shafts
Bold shaft diameters indicate standard shaft
◊ RS dimension is the minimum recommended shaft shoulder diameter

Q-Loc installation

WARNING

All products over 55 lbs (25 kg) are noted on the shipping package. Proper lifting procedures are required for those products.

Follow appropriate lock-out / tag-out procedures to immobilize the drive motor and driven equipment.

Only qualified, trained, maintenance personnel should install the shrink disk and reducer onto the driven equipment.

Provide a proper support for the reducer while mounting it on the driven shaft.

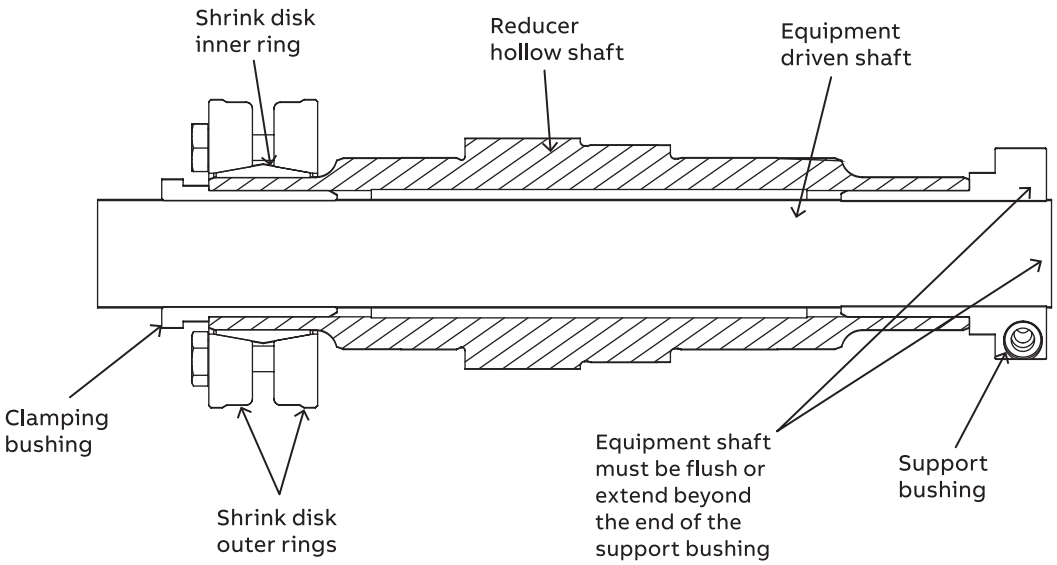

Figure 1 – Quantis Q-Loc

Installation

1. Review and verify the requirements for minimum shaft diameter and surface finish listed on the following page are met.
2. Determine which side of the reducer the shrink disk will be located. The recommended location of the shrink disc is on the equipment side of the reducer.
3. Clean the driven shaft with an oil-free solvent to completely remove all traces of dirt, grease, oil, and other contaminants. Only the length where the shrink disk and clamping bushing will be located need to be cleaned.
4. Clean the portion of the inside diameter of the shrink disk that mates with the reducer hollow shaft with an oil-free solvent to completely remove all traces of dirt, grease, oil, and other contaminants. Do NOT remove any lubricants between the inner and outer rings of the shrink disk.
5. Clean the inside and outside diameters of the clamping bushing where it will contact the customer shaft and reducer hollow shaft with an oil-free solvent to completely remove all traces of dirt, grease, oil, and other contaiminants.
6. Clean the inside diameter of the reducer hollow shaft in the area where the clamping bushing will be located with an oil-free solvent to completely remove all traces of dirt, grease, oil, and other contaminants.
7. Slide the support bushing onto the equipment driven shaft to ensure the support bushing screw has not been tightened and the bushing easily slides onto the shaft.
8. Remove the support bushing from the driven shaft and apply a light oil to the inside diameter of the support bushing where it will contact the customer shaft. Apply anti-seize compound to the outside diameter of the support bushing where it will contact the reducer hollow shaft.

Q-Loc installation
(cont.)

9. Insert the support bushing on the side of the reducer opposite of where the shrink disk will be located. Do not tighten the support bushing at this time.
10. Loosen all of the screws on the shrink and slide the shrink disk onto the reducer hollow shaft.
11. Slide the clamping bushing into the reducer hollow shaft on the side where the shrink disk is located.
12. Slide the reducer onto the equipment driven shaft. If the shaft does not have a locating shoulder, a clamping ring (not provided) may be added to make it easier to locate the reducer on the driven shaft.
13. Once the reducer is located in the desired location, make sure the support bushing is up against the end of the reducer hollow shaft.
14. Tighten the support bushing screw.
15. Make sure the clamping bushing is up against the end of the hollow shaft. Position the shrink disk so that the outboard outer ring is flush with the end of the reducer hollow shaft.
16. Tighten the screws on the shrink disk in the order shown below. The shrink disk screws are metric so metric sockets will need to be used. Do NOT use a cross pattern to tighten the screws. Tighten the screws in 3 steps to the values shown in Table 1. The use of a torque wrench is mandatory to tighten the shrink disk screws. Failure to use a torque wrench could result in shaft slippage.

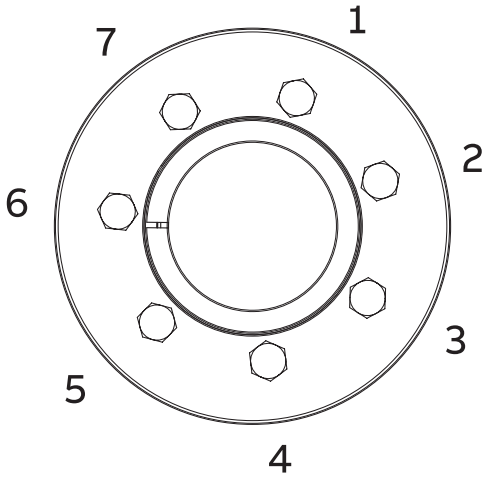

Figure 2 – Tightening torque pattern

Table 1 - Tightening Torque

Reducer size	Tightening torque (in-lbs)	Tightening torque (N•M)
38	106	12
48 & 58	106	12
68	106	12
88	106	12
108	265	30

Reducer size	Bore	Minimum customer Shaft diameter allowed
38	1.000	0.995
48	1.000	0.995
	1.125	1.120
	1.250	1.244
	1.375	1.369
	1.4375	1.431
58	1.1875	1.1825
	1.250	1.244
	1.375	1.369
	1.4375	1.431
	1.500	1.494
68	1.250	1.244
	1.375	1.369
	1.4375	1.431
	1.625	1.619
	1.6875	1.681
88	1.4375	1.432
	1.625	1.619
	1.6875	1.681
	1.9375	1.931
	2.000	1.993
108	1.9375	1.932
	2.000	1.993
	2.1875	2.180
	2.4375	2.430

Note: The number of screws in the shrink disks vary and may not match the diagram in Figure 2.

Refer to pages RHB-208 and MSM-179 for minimum shaft length required.

Shrink disk installation

Instructions for Dodge Quantis MSM and RHB reducers

WARNING
To ensure that the drive is not unexpectedly started, turn off and lock out or tag power source before proceeding. Failure to observe these precautions could result in bodily injury.

WARNING
Do not disassemble the shrink disk before first clamping.

The Shrink Disk is delivered ready for installation.

Assembly

The bore of the hollow shaft and the outside diameter of the machine shaft must be clean, dry and free of grease and oil in the area around the shrink disk seat. The performance of the unit depends on proper installation. Dirty solvents and cleaning rags are unsuitable for cleaning these surfaces. The tapered surfaces of the shrink disk may be lightly coated with grease.

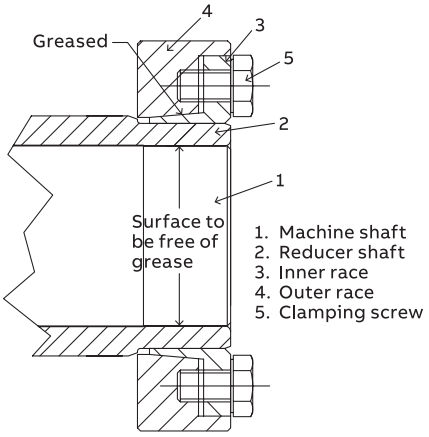

WARNING
Never tighten the clamping screws before the machine shaft is installed. If the clamping screws are tightened before the machine shaft is installed, the reducer hollow shaft will be plastically deformed and permanently damaged.

The clamping screws are to be tightened in the proper sequence until the front surfaces of the outer and inner race are flush. The correct clamping state can thus be checked visually.

Reference the following diagram for the proper tightening sequence for the clamping screws.

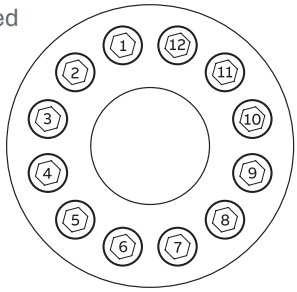

To avoid overloading the individual screws, the maximum tightening torque must not be exceeded. Again, proper installation is achieved when the faces are flush. If the front surfaces of the inner and outer races are not flush after the screws are properly tightened, the tolerance of the machine shaft outer diameter should be checked to determine if it is within specification.

Maximum tightening torques

Unit size	Clamping screw thread	Max. tightening torque	
38	M8	29 Nm	22 ft-lb
48	M8	29 Nm	22 ft-lb
68	M8	29 Nm	22 ft-lb
88	M10	58 Nm	43 ft-lb
108	M10	58 Nm	43 ft-lb
128	M10	58 Nm	43 ft-lb
148	M12	100 Nm	74 ft-lb
168	M14	160 Nm	118 ft-lb

Re-install the protective cover after the clamping screws are tightened.

Disassembly

The clamping screws are to be loosened in sequence. If the outer race does not come off the inner race by itself, some clamping screws can be used as jack screws in the jack holes provided to force the two races apart. The shrink disk can then be removed from the reducer shaft.

Cleaning and lubrication

If the gear unit is disassembled for any reason, it is recommended that the shrink disk be lubricated prior to re-assembly. Only the tapered surfaces should be lubricated. A solid grease with a friction coefficient of $\mu = 0.04$ in accordance with the table below should be used.

Lubricant	Commercial form	Manufacturer
Molykote 321R	Spray	DOW Corning
Molkote Spray	Spray	DOW Corning
Molkote G Rapid	Spray or paste	DOW Corning
Aemasol MO 19 P	Spray or paste	A. C. Matthes
Molkombin UMFT 1	Spray	Kluber
Unimoly P5	Powder	Kluber

RHB Torque-Arm bracket (K) installation

The Torque-Arm bracket must be attached to the tapped holes in the RHB housing base. The two mounting capscrews must be properly tightened with a torque wrench to their recommended tightening torque (see table below). It is highly recommended that the capscrews be secured with threadlocker (Loctite 243 or equivalent) to prevent them from loosening in service.

The Torque-Arm bracket should be attached to the set of tapped holes in the base of the RHB unit that is adjacent to the nearest bearing supporting the driven shaft.

A torque restraining device must be pin connected to the Torque-Arm by means of a clevis type connection. The pin diameter required is listed above or may be found on page RHB-348 (dimension "FU"). See the sketch below. It is very important that a clevis type device that straddles the Torque-Arm bracket is used. This will ensure that no twisting moment is imposed on the Torque-Arm bracket.

The clevis may be rigidly connected to nearby rigid framework or may be affixed to the end of a tie-rod assembly. If a tie-rod is used as a torque restraint, it should be oriented parallel to the base of the RHB unit. If this parallel orientation is not possible, it should not be oriented more than 20 degrees from parallel. Tie-rod orientation at greater angles will result in excessive loads on the RHB Torque-Arm bracket.

Recommended Tightening Torques

Unit	Mounting capscrew size	Tightening torque	Torque-Arm bracket pin diameter
BF38	M10	440 lb-in (50 Nm)	.47 in. (12 mm)
BF48	M10	440 lb-in (50 Nm)	.71 in. (18 mm)
BF58 & 68	M12	800 lb-in (90 Nm)	.71 in. (18 mm)
BF88	M16	1860 lb-in (210 Nm)	.98 in. (25 mm)
BF108	M16	1860 lb-in (210 Nm)	.98 in. (25 mm)
BF128	M20	3720 lb-in (420 Nm)	.98 in. (25 mm)
BF148	M24	6420 lb-in (725 Nm)	1.57 in. (40 mm)
BF168	M30	12840 lb-in (1450 Nm)	1.57 in. (40 mm)

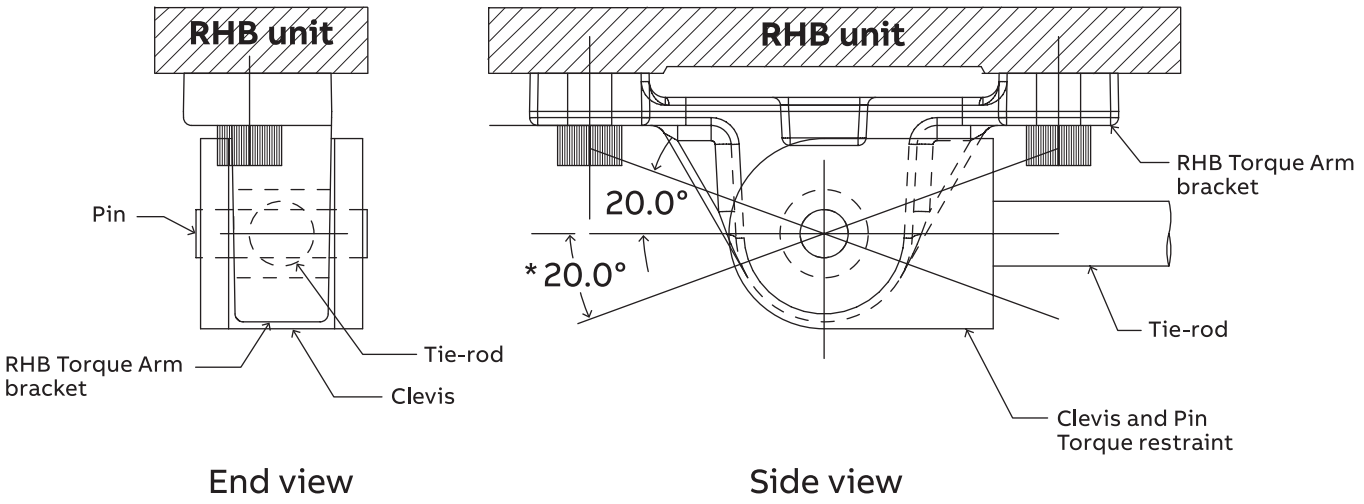

* Allowable angular orientation of tie-rod is no more than ± 20 degrees from a line parallel to base of RHB unit.

RHB tie rod kit (KR) installation

Figure A

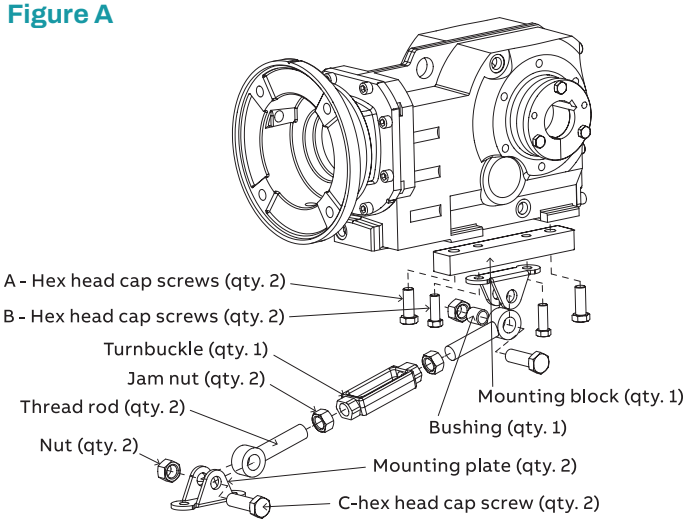

Reducer size		Screw size and thread	Tightening torque * (ft-lb.)
BF38	A	M10 x 35	43
	B	7/16 - 14	35
	C	5/8 - 11	Hand snug
BF48	A	M10 x 45	43
	B	7/16 - 14	35
	C	5/8 - 11	Hand snug
BF58 & 68	A	M12 x 45	74
	B	7/16- -14	35
	C	5/8 - 11	Hand snug
BF88	A	M16 x 55	181
	B	1/2/ - 3	55
	C	5/8 - 11	Hand snug
BF108	A	M16 x 55	181
	B	5/8 - 11	110
	C	5/8 - 11	Hand snug
BF128	A	M20 x 65	350
	B	3/4 - 10	200
	C	1 - 8	Hand snug
BF148	A	M24 x 75	605
	B	3/4 - 10	200
	C	1-8	Hand snug
BF168	A	M30 x 120	1210
	B	1 - 8	480
	C	1-1/4 - 7	Hand snug

*Apply threadlocker to all fasteners

Position the tie rod mounting block on the reducer hole pattern. The tie rod assembly must be located on the same side of the reducer as the driven shaft (see Figure B). Insert the supplied metric screws and tighten them to the tightening torque value labeled “A” in the above table. Position a mounting plate on the mounting block. Insert the supplied screws and tighten them to the tightening torque value labeled “B”. Connect a threaded rod to the mounting plate using a screw, bushing, and nut. Apply Threadlocker and hand tighten. Assemble a nut, turnbuckle, second threaded rod, and mounting plate (see Figure A). Attach this assembly to the threaded rod connected to the mounting plate. Orient the tie rod assembly at an angle within the range shown in Figure C, and secure the second mounting plate. Use Threadlocker and hand tighten the second mounting plate screw. Adjust the length of the tie rod assembly by rotating the turnbuckle. Tighten the jam nuts against the turnbuckle to lock the length of the tie rod assembly. Overall length can be reduced further (approximately 6 inches) by cutting the excess threaded rod from the tie rods.

Figure B

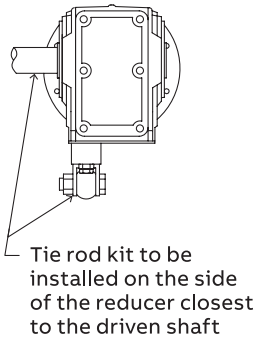

Figure C

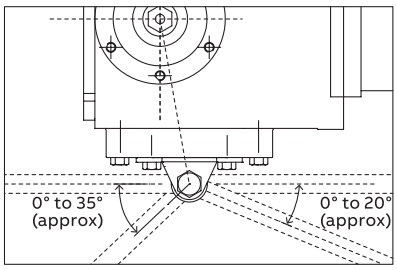

WARNING
Failure to apply threadlocker and the correct tightening torque to fasteners may result in equipment failure and personal injury.

Torque-Arm mounting installati0on

1. Ensure the Torque-Arm bracket and the mounting surface is rigid and does not deflect or vibrate under load.
2. Mount the Torque-Arm to the reducer housing using the specified bolts to the torques listed on page ENG-1. All possible mounting positions are shown on the following page. Bolts used should be secured with a thread locking compound.
3. Use the recommended size mounting bolt shown in Table 1. The mounting bolt in the Torque-Arm bracket should be securely fixed with a second nut or lock washer to prevent it from loosening when the rubber bushing compresses. At least one bolt diameter length should protrude from the nut after tightening. Ensure the bolt is centered in the Torque-Arm bracket.
4. Use washers to prevent the bracket from touching the Torque-Arm. Use washers in between the bracket and Torque-Arm to ensure clearance and a snug fit.
5. Position the Torque-Arm to align with the bracket and washers. Insert the bolt and secure with a nut or lockwasher. Do NOT force the Torque-Arm. If it does not align properly in the bracket, move the bracket.

WARNING

To ensure that the drive is not unexpectedly started, turn off and lock out or tag power source before proceeding. Failure to observe these precautions could result in bodily injury.

Table 1

Required Thread Size for Mounting Bolt	
Unit Size	**Thread Size**
38	M10
48	M10
58	M10
68	M10
88	M16
108	M16
128	M24
148	M24
168	M24

Note: The only recommended bracket should be a U-shaped bracket shown in the figure below to hold both sides.

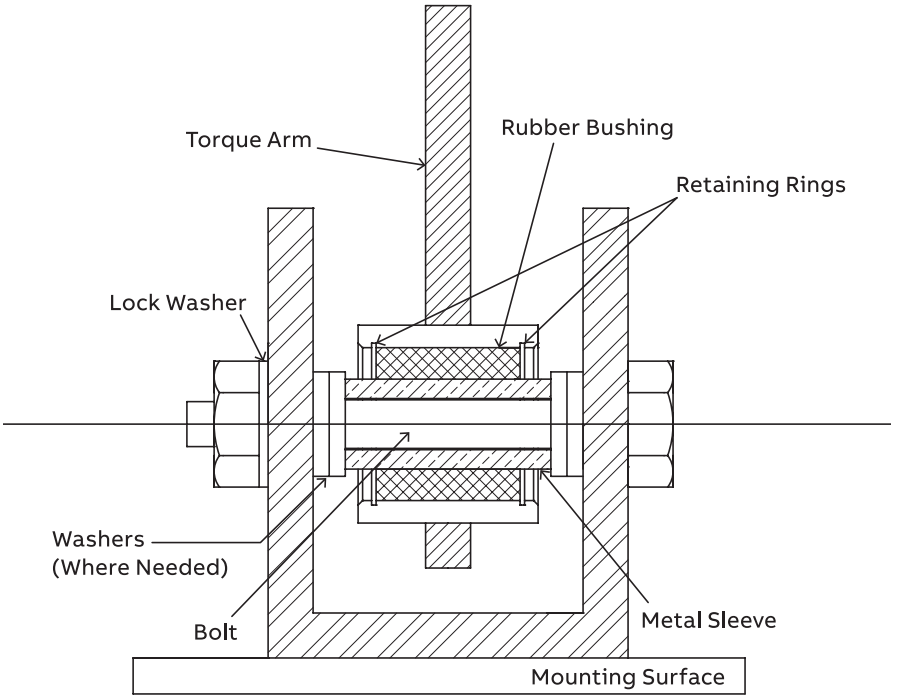

Figure 1

RHB Banjo Torque-Arm (KT) installation

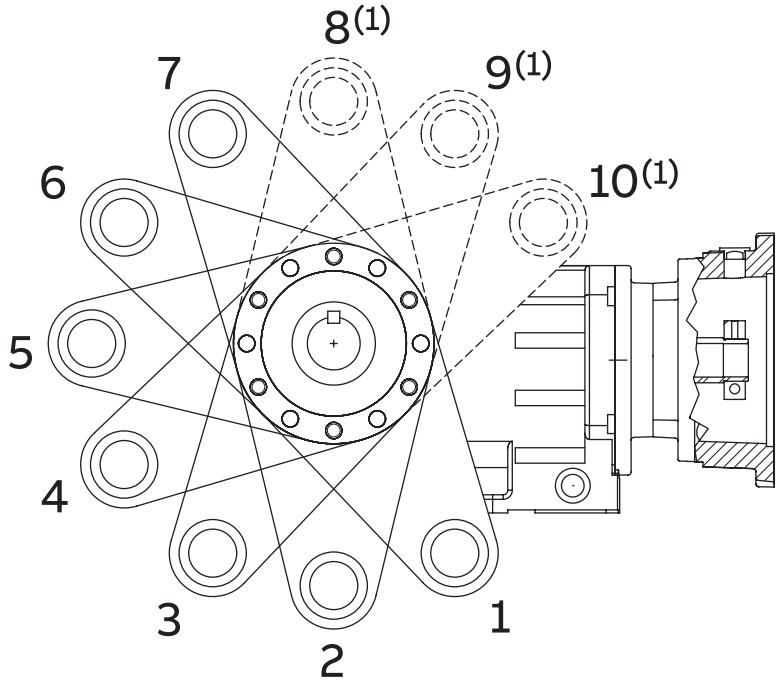

Standard torque-arm (KT) possible mounting positions

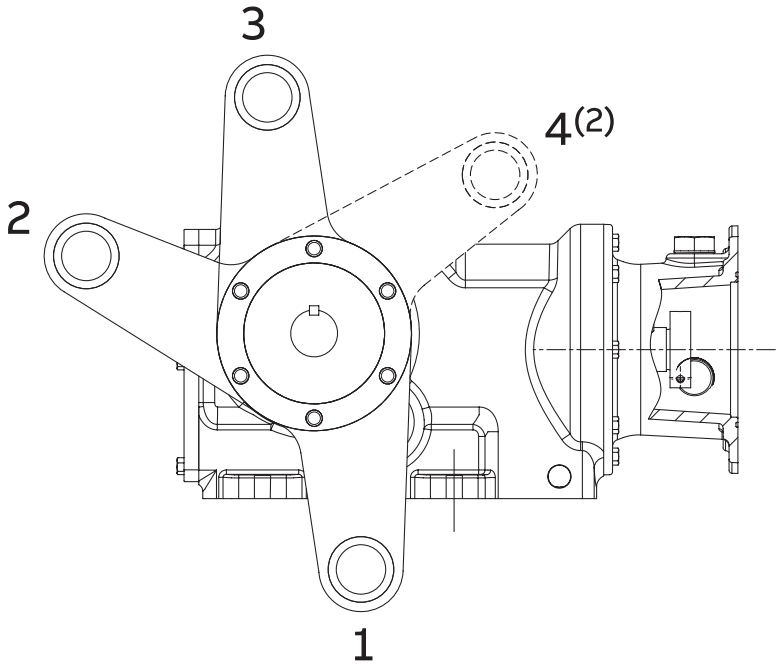

Stainless steel torque-arm (KTS) possible mounting positions

Notes: (1) Torque-Arm can not be mounted in position 8,9, and 10 for washdown units because of interference with the washdown plug.
(2) Stainless Steel Torque-Arm can not be mounted in position 4 on size 48 reducers because of intereference with the stainless steel plug.

Modular integral motor system

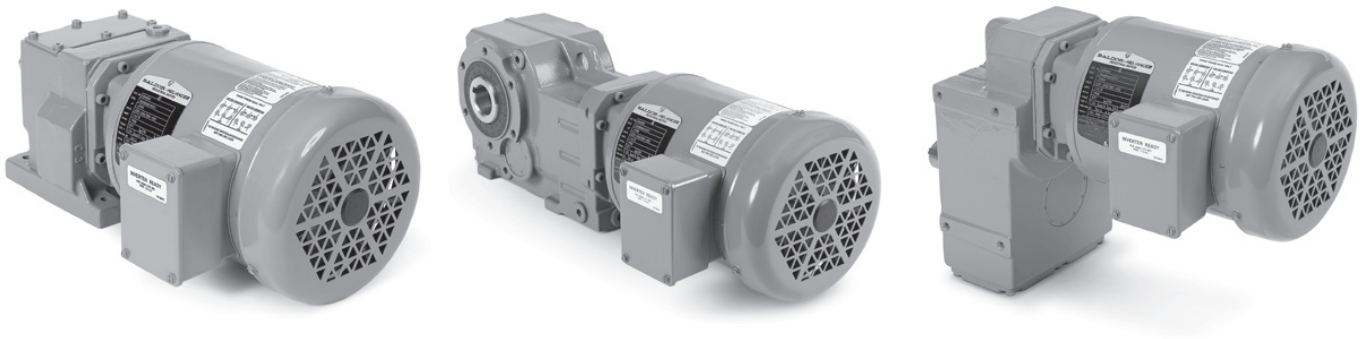

Three-phase squirrel cage induction motors

Designs

Integral gearmotor Hp/kW frame designations

Hp/kW	Frame	Hp/kW	Frame	Hp/kW	Frame
.25/.18	71C4	2/1.5	90I4	15	160P4
.33/.25	71D4	3/2.2	100J4	20	160Q4
.50/.37	71E4	*/4	100K4	25	180R4
.75/.55	80F4	5/*	112L4	30	180S4
1/.75	80G4	7.5/5.5	132M4	40	200T4
1.5/1.1	90H4	10/7.5	132N4	—	—

Regulations:

- The motors comply with the appropriate IEC, or NEMA standards.

Enclosure:

- TEFC, totally enclosed fan cooled.
- Protection IP 55 for protection against dust and water jets is standard.
- IP56 protection is available for heavy washdown applications.
- Housings are rolled steel frame. Fans are suitable for both rotational directions.

Additional features, built-in and attached elements:

- Dodge D Series Brakes on standard integral motors
- Stearns brakes on washdown integral motors
- Manual Release Included
- Terminal blocks standard on IEC rated integral motors

Inverter Capability:

- 10-60 Hz constant Torque (6:1) up to 1 Hp/.75 kW
- 6-60 Hz constant Torque (10:1) above 1 Hp and on all brake motors

Integral motors – electrical specifications

Standard integral motors

1800 RPM - synchronous speed **208-230/460 volt, 3 Ph, 60 Hz**

Nominal power (Hp)	Type	Nominal speed RPM	Voltage	IP rating	Nominal current at 230V amps	Nominal current at 460V amps	Starting current amps	Starting torque (lb-ft)	Moment of Inertia (lb-ft²)	Efficiency %	Power factor	Weight (lb)
0.25	71C4	1725	230/460	IP55	1.30	0.65	3.45	2.57	0.024	64.0	56	19
0.33	71D4	1725	230/460	IP55	1.60	0.80	4.40	3.75	0.031	68.0	57	25
0.5	71E4	1725	230/460	IP55	2.00	1.00	6.50	5.30	0.038	74.0	63	26
0.75	80F4	1725	230/460	IP55	3.00	1.50	10.0	8.80	0.048	75.5	60	29
1	80G4	1725	208-230/460	IP55	3.60	1.80	14.6	15.8	0.067	75.5	64	46
1.5	90H4	1740	208-230/460	IP55	4.20	2.00	16.8	15.2	0.166	86.5	80	47
2	90I4	1725	208-230/460	IP55	5.60	2.60	19.6	18.0	0.190	86.5	82	52
3	100J4	1750	208-230/460	IP55	8.30	4.10	38.6	42.5	0.273	87.5	78	72
5	112L4	1750	208-230/460	IP55	13.6	6.50	53.7	39.0	0.400	90.2	80	102
7.5	132M4	1770	208-230/460	IP55	21.0	9.40	71.6	42.1	0.885	91.7	81	137
10	132N4	1770	208-230/460	IP55	26.8	12.5	93.8	58.1	1.280	92.4	82	165
15	160P4	1750	230/460	IP55	36.0	18.0	125.0	88.0	1.840	92.4	84	255
20	160Q4	1750	230/460	IP55	48.0	24.0	171.0	120.0	2.270	93.0	84	255
25	180R4	1750	230/460	IP55	60.0	30.0	204.0	131.0	4.770	93.6	83	380
30	180S4	1750	230/460	IP55	72.0	36.0	272.0	177.0	5.880	93.6	83	437
40	200T4	1775	230/460	IP55	96.0	48.0	384.0	251.0	7.000	94.1	82	600

0.04 **575 volt, 3 Ph, 60 Hz**

Nominal power (Hp)	Type	Nominal speed RPM	Voltage	IP rating	Nominal current at 575V amps	Starting current amps	Starting torque (lb-ft)	Moment of Inertia (lb-ft²)	Efficiency %	Power factor	Weight (lb)
0.25	71C4	1725	575	IP55	.30	0.000	2.57	0.1000	80.0	72.00	33
0.33	71D4	1725	575	IP55	.50	0.000	3.75	0.1000	80.0	67.00	35
0.5	71E4	1725	575	IP55	.60	4.440	5.30	0.0800	82.5	74.00	34
0.75	80F4	1725	575	IP55	1.20	8.000	8.80	0.0480	75.5	60.00	33
1	80G4	1725	575	IP55	1.10	9.000	15.8	0.1400	85.5	79.00	43
1.5	90H4	1740	575	IP55	1.70	15.800	15.2	0.2000	88.5	76.00	52
2	90I4	1725	575	IP55	2.20	19.600	18.0	0.2100	88.5	76.00	55
3	100J4	1750	575	IP55	3.10	25.600	42.5	0.2630	89.5	77.00	73
5	112L4	1750	575	IP55	5.20	43.000	39.0	0.4000	90.2	80.00	98
7.5	132M4	1770	575	IP55	7.60	58.500	42.1	0.8900	91.7	81.00	135
10	132N4	1770	575	IP55	10.00	73.200	58.1	1.2800	92.4	82.00	165

Motors rated at 230 / 460V are operable to minimum 208 volts.

Motors will operate with +/- 10% variation in rated voltage with rated frequency. Performance within this voltage variation will not necessarily be in accordance with rated voltage.

Integral motors – electrical specifications

Standard integral motors

1500 RPM - synchronous speed — **220-240/380-420 volt, 3 Ph, 50 Hz**

Nominal power (kW)	Type	Nominal speed RPM	Voltage	IP rating	Nominal current at 220-240V amps	Nominal current at 380-420V amps	Starting current amps	Starting torque (lb-ft)	Moment of Inertia (lb-ft²)	Efficiency %	Power factor	Weight (lb)
.18	71C4	1450	220-240/380-420	IP55	0.8	0.4	3.44	2.57	0.0768	78.5	71	33
.25	71D4	1450	220-240/380-420	IP55	1	0.6	4.61	3.75	0.0768	80	70	33
.37	71E4	1450	220-240/380-420	IP55	1.6	0.95	6.32	5.30	0.1000	81.5	75	38
.55	80F4	1450	220-240/380-420	IP55	2.6	1.5	9.37	8.80	0.1000	82.5	75	35
.75	80G4	1450	220-240/380-420	IP55	2.9	1.7	13.2	15.8	0.1180	84	72	43
1.1	90H4	1450	220-240/380-420	IP55	4.2	2.4	18.2	15.2	0.1420	85.5	79	39
1.5	90I4	1450	220-240/380-420	IP55	5.2	3	23.8	21.76	0.2010	86.5	80	57
2.2	100J4	1450	220-240/380-420	IP55	8.1	4.6	33.6	23.9	0.3170	87.5	74	81
3	100K4	1450	220-240/380-420	IP55	10.4	6	50.8	53	0.3720	87.7	82	92
4	112L4	1450	380-415	IP55	8.2	8	55.3	43.1	0.4000	88.6	82	100
5	132M4	1450	380-415	IP55	11.2	10.7	82	59.2	1.1800	91	81	159
7.5	132N4	1450	380-415	IP55	14.7	14.3	133	130	1.3800	91	83	187

Washdown integral motors

1800 RPM - synchronous speed — **208-230/460 volt, 3 Ph, 60 Hz**

Nominal power (Hp)	Type	Nominal speed RPM	Voltage	IP rating	Nominal current at 230V amps	Nominal current at 460V amps	Starting current amps	Starting torque (lb-ft)	Moment of Inertia (lb-ft²)	Efficiency %	Power factor	Weight (lb)
0.5	71E4	1735	208-230/460	IP56	1.6	.8	5.38	4.99	.0827	82.5	74.00	33
0.75	80F4	1760	208-230/460	IP56	2.2	1.1	9.4	7.34	.0946	84.0	73.00	37
1	80G4	1725	208-230/460	IP56	3.4	1.7	15.700	11.4	0.1300	85.5	62.00	37
1.5	90H4	1750	208-230/460	IP56	4.4	2.2	19.300	14.4	0.1540	86.5	72.00	41
2	90I4	1725	208-230/460	IP56	5.8	2.9	42.800	24.3	0.1770	86.5	73.00	48
3	100J4	1750	208-230/460	IP56	8.4	4.2	33.800	33.8	0.3720	89.5	76.00	92
5	112L4	1750	208-230/460	IP56	13.8	6.9	53.800	38.3	0.4100	89.5	76.00	96
7.5	132M4	1770	208-230/460	IP56	21.4	10.7	92.900	55.7	0.9340	91.7	72.00	129
10	132N4	1770	208-230/460	IP56	24	12	103.000	68.7	1.2800	91.7	85.00	165

Motors rated at 230 / 460V are operable to minimum 208 volts.

Motors will operate with +/- 10% variation in rated voltage with rated frequency. Performance within this voltage variation will not necessarily be in accordance with rated voltage.

Integral motors – brake options – brake lever position

Standard/Washdown integral brake motors

1800 RPM – Synchronous speed

Nominal power (Hp)	Type	Standard						Washdown		
		Brake size	Brake torque (ft–lbs)	Brake release positions				Brake size	Brake torque (ft–lbs)	Brake release position
				BSTD	B1	B2	B3			
0.25	71C4	D3	3	•	•	•	•	–	–	–
0.33	71D4	D3	3	•	•	•	•	–	–	–
0.5	71E4	D3	3	•	•	•	•	S3	3	*
0.75	80F4	D6	6	•	•	•	•	S6	6	*
1	80G4	D6	6	•	•	•	•	S6	6	*
1.5	90H4	D10	10	•	•	•	•	S10	10	*
2	90I4	D10	10	•	•	•	•	S10	10	*
3	100J4	D15	15	•	•	•	•	S15	15	*
5	112L4	D25	25	•	•	•	•	S25	25	*
7.5	132M4	D35	35	–	•	•	•	•	35	BSTD
10	132N4	D50	50	–	•	•	•	•	50	BSTD
15	160P4	S60	60	–	–	•	–	–	–	–
20	160Q4	S110	110	–	–	•	–	–	–	–
25	180R4	S110	110	–	–	•	–	–	–	–

***Note:** Washdown brake motors (.5hp-5hp)have internal release and can not be moved. 7.5hp and 10hp have external release in the Bstd position and can not be moved.

Applies to the following brake motors:
0.25 Hp thru 5 Hp
7.5 Hp thru 10 Hp offered in B1 and B2 positions only

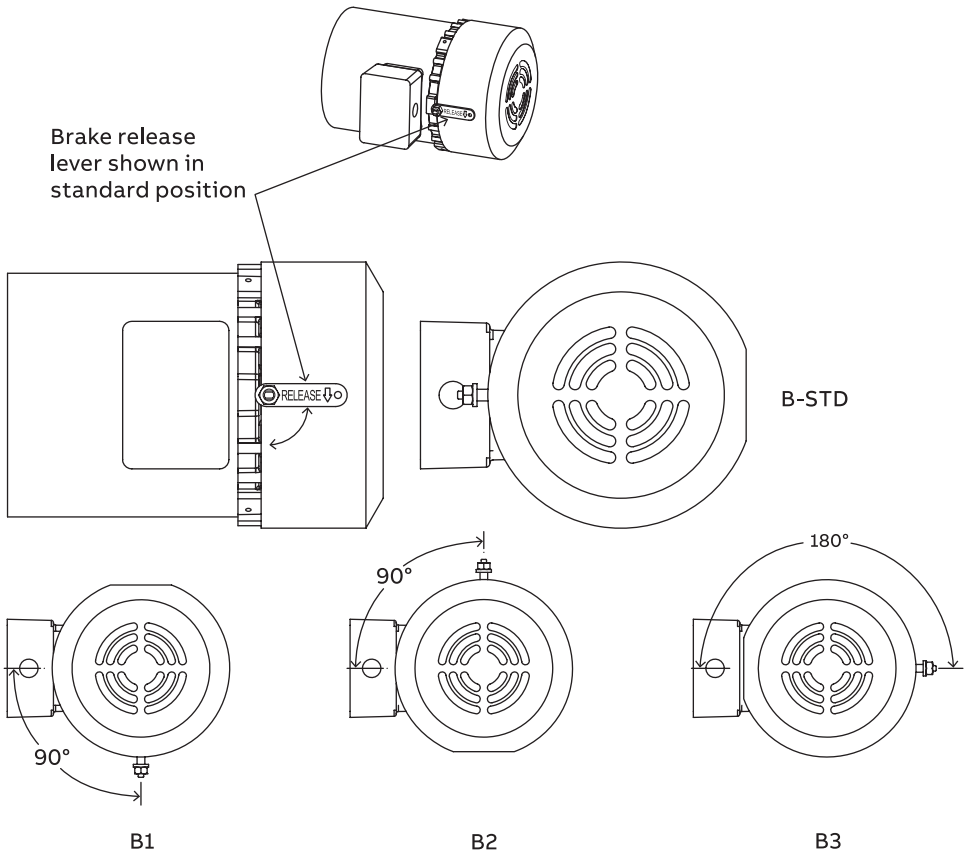

For all motor horsepowers, the brake handle position is **relative** to the conduit box position.

Conduit box mounting positions

The terminal box can be located in 4 different positions by rotating the body of the motor. The standard position is position 1 with the cable entry located in the A location.

The standard position, along with the optional positions, 2, 3, & 4 are shown to the right. The cable entry locations shown can identified by four letters, A, B, C, & D.

A1-A6 refers to the gearbox mounting positions that can be found on the following pages:

- ILH-4
- RHB-6
- MSM-4

The location of the motor terminal box and cable entry can be specified at time of order.

A1

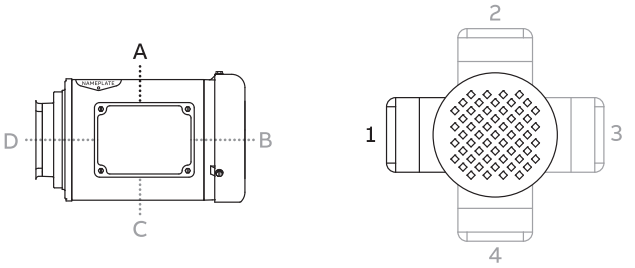

A2

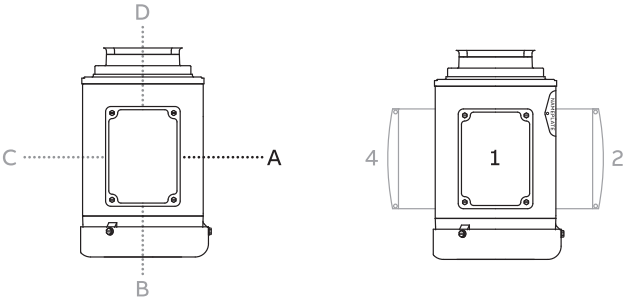

A3

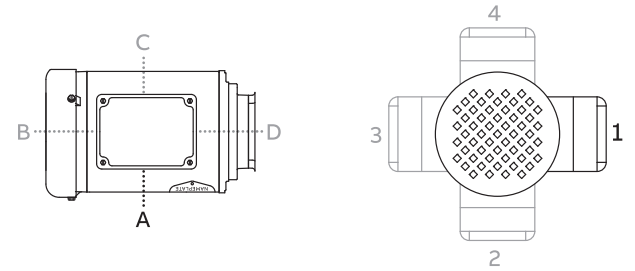

A4

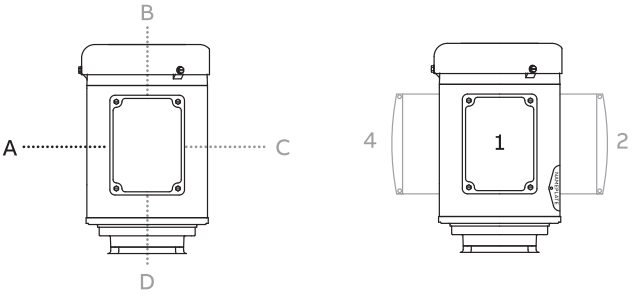

A5

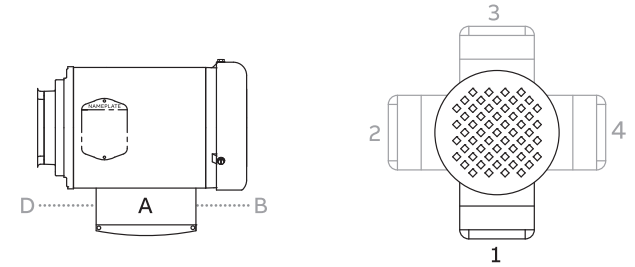

A6

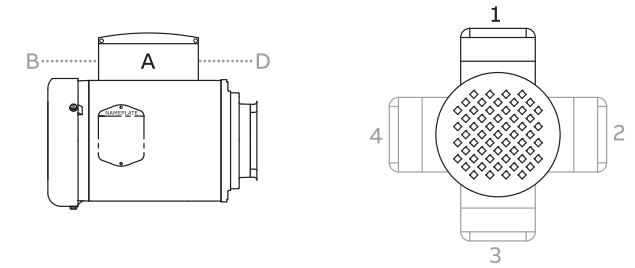

Notes